ESTCP
Cost and Performance Report

(WP-200906)

Demonstration of Non-Chromate Primer, ZVOC Topcoat for Ground Support Equipment

April 2015

This document has been cleared for public release; Distribution Statement A

ESTCP

ENVIRONMENTAL SECURITY
TECHNOLOGY CERTIFICATION PROGRAM

U.S. Department of Defense

REPORT DOCUMENTATION PAGE

Form Approved
OMB No. 0704-0188

Public reporting burden for this collection of information is estimated to average 1 hour per response, including the time for reviewing instructions, searching existing data sources, gathering and maintaining the data needed, and completing and reviewing this collection of information. Send comments regarding this burden estimate or any other aspect of this collection of information, including suggestions for reducing this burden to Department of Defense, Washington Headquarters Services, Directorate for Information Operations and Reports (0704-0188), 1215 Jefferson Davis Highway, Suite 1204, Arlington, VA 22202-4302. Respondents should be aware that notwithstanding any other provision of law, no person shall be subject to any penalty for failing to comply with a collection of information if it does not display a currently valid OMB control number. **PLEASE DO NOT RETURN YOUR FORM TO THE ABOVE ADDRESS.**

1. REPORT DATE *(DD-MM-YYYY)*

2. REPORT TYPE
Cost and Performance Report

3. DATES COVERED *(From - To)*
2009-2012

4. TITLE AND SUBTITLE
Cost and Performance Report:
Demonstration of Non-Chromate Primer, ZVOC Topcoat for Ground Support Equipment

5a. CONTRACT NUMBER

5b. GRANT NUMBER

5c. PROGRAM ELEMENT NUMBER

6. AUTHOR(S)
Amy Fowler, Luwam Hagos (NAVAIR), Jack Kelley, Tom Braswell (US ARL)

5d. PROJECT NUMBER
WP200906

5e. TASK NUMBER

5f. WORK UNIT NUMBER

7. PERFORMING ORGANIZATION NAME(S) AND ADDRESS(ES)
US Army Research Laboratory

8. PERFORMING ORGANIZATION REPORT NUMBER

9. SPONSORING / MONITORING AGENCY NAME(S) AND ADDRESS(ES)

10. SPONSOR/MONITOR'S ACRONYM(S)

11. SPONSOR/MONITOR'S REPORT NUMBER(S)

12. DISTRIBUTION / AVAILABILITY STATEMENT
DISTRIBUTION STATEMENT A. Approved for public release; distribution is unlimited

13. SUPPLEMENTARY NOTES

14. ABSTRACT

The objective of the demonstration at FRC-E was to prove out the effectiveness of a non-chromate pretreatment and primer used in conjunction with a ZVOC topcoat on LCS GSE. The current process for ground support at FRC-E includes an abrasive blasted substrate with MIL-DTL-53022 primer and MIL-PRF-85285 Type I/II topcoat. This demonstration introduced a silane-based, non-chromate pretreatment, Gardobond AP 9809, Deft 02GN084 non-chrome primer and ZVOC topcoat. Using a systems approach, this demonstration was designed to generate the cost and performance data necessary for authorization and implementation decisions by appropriate authorities within the DoD. The demonstration utilized GSE a transportation cart and F402 stands at FRC-E. The alternative coating system performed well and was incorporated into the NA 17-1-125 manual. Although, the ZVOC topcoat and non-chrome primer were proven to be viable options, FRC-E has decided to not implement. Implementation of the ZVOC topcoat was not pursued in part because of challenges associated with proper application of the ZVOC.

15. SUBJECT TERMS

16. SECURITY CLASSIFICATION OF:			**17. LIMITATION OF ABSTRACT**	**18. NUMBER OF PAGES**	**19a. NAME OF RESPONSIBLE PERSON**
					Jack Kelley
a. REPORT	**b. ABSTRACT**	**c. THIS PAGE**	UU	36	**19b. TELEPHONE NUMBER** *(include area code)*
UU	UU	UU			410-306-0837

Standard Form 298 (Rev. 8-98)
Prescribed by ANSI Std. Z39.18

Table of Content

Table of Content 2
Table of Figures 3
Table of Tables 3
LIST OF ACRONYMS 4
ACKNOWLEDGEMENTS 5
EXECUTIVE SUMMARY 6
1.0 INTRODUCTION 8
1.1 BACKGROUND 8
1.1.1 The Need to Reduce VOC Content in Primers and Topcoats 8
1.1.2 Uses of Hexavalent Chromium 8
1.1.3 Potential Alternatives and Approach to Reducing Hexavalent Chromium 9
1.2 OBJECTIVES OF THE DEMONSTRATION 9
1.3 REGULATORY DRIVERS 9
2.0 DEMONSTRATION TECHNOLOGY 11
2.1 TECHNOLOGY DESCRIPTION 11
2.1.1 Technology Description: Deft 55W002 (MIL-PRF-85285, Type III) ZVOC Topcoat 11
2.1.2 Technology Description: Deft 02GN084 (MIL-PRF-23377, Type I, Class N) Primer 12
2.1.3 Technology Description: Pretreatments (Chemetall Oxsilan 9810/2 and Chemetall Gardobond AP 9809) 13
2.2 ADVANTAGES AND LIMITATIONS OF THE TECHNOLOGY 14
2.3.1 ZVOC Topcoat (MIL-PRF-85285, Type III) 14
2.3.2 Deft 02GN084 (MIL-PRF-23377, Type I, Class N) Primer 14
2.3.3 Chemetall Oxsilan 9810/2 Pretreatment 15
2.3.4 Chemetall Gardobond AP 9809 Pretreatment 15
3.0 PERFORMANCE OBJECTIVES 16
4.0 SITE/PLATFORM DESCRIPTION 18
4.1 Test Platforms/Facilities 18
4.2 Present Operations 18
4.3 Site-Related Permits and Regulations 19
5.0 TEST DESIGN 20
5.1 Conceptual Experimental Design 20
5.2 Field Test Requirements 22
6.0 PERFORMANCE ASSESSMENT 25
6.1 Laboratory Testing Results 25
6.2 FRC-E Demonstration 27
6.2.1 Demonstrated GSE - F402 Stands 29
6.2.2 Demonstrated GSE – B-210 GT Cart 29
7.0 COST ASSESSMENT 30
7.1 Cost Model 30
7.2 Cost Analysis and Comparison 31
8.0 IMPLEMENTATION ISSUES 33
9.0 REFERENCES 34
Appendix: Points of Contact 36

Table of Figures

Figure 2-1: Coatings System Diagram for LCS GSE Demonstration at FRC-E 11
Figure 2-2: Schematics of the Oxsilan 9810/2 Coating Process (left) used on LCS Witness Coupons and Gardobond AP 9809 Coating Process (right) used on LCS GSE for FRC-E Demonstration..... 14
Figure 4-1: Typical Flow Diagram of the Current Process for GSE at FRC-E 18
Figure 5-1: Schematic of B-210 GT cart (left) and F402 stand (right) used in the demonstration at FRC-East..... 23

Table of Tables

Table 3-1: Performance Objectives for ZVOC Coating System over Two Non-Chrome Steel Pretreatments..... 16
Table 5-1: Performance Testing Requirements 21
Table 5-2: Field Testing Requirements for GSE at FRC-E 22
Table 5-3: Coating Systems Used on F402 Stands 23
Table 5-4: Coating Systems Used on the B-210 GT Cart..... 24
Table 6-1: Average Rating Results for Coating Adhesion and Chip Resistance 26
Table 6-2: GM9540P Cyclic Corrosion Resistance Average Results for LCS..... 26
Table 6-3: ASTM D2247 Rating for LCS after in the Humidity Chamber Set at 100% RH and 120°F…27
Table 6-4: ASTM D1654 Ratings for LCS in Outdoor Exposure after 2 years..... 27
Table 6-5: Validation Methods and Expected Performance Metrics for Demonstrating ZVOC Coating System on F402 Stands and a B-210 GT Cart 28
Table 7-1: Demonstration Items Tracked for Life Cycle Cost Analysis...……..……...…..30

LIST OF ACRONYMS

ARL	Army Research Laboratory
ASTM	American Society of Testing and Materials
CARC	Chemical Agent Resistant Coating
CCPE	Corrosion Control and Prevention Executive
CRES	Corrosion Resistant Steel
DoD	Department of Defense
EPA	Environmental Protection Agency
ESTCP	Environmental Security Technology Certification Program
FED-STD	Federal Standard
FRC	Fleet Readiness Center
GM	General Motors
GSE	Ground Support Equipment
HAP	Hazardous Air Pollutants
JTP	Joint Test Protocol
LCS	Low Carbon Steel
LKE	Lakehurst
MIL-DTL	Military Detail
MIL-PRF	Military Performance
NAWCAD	Naval Air Warfare Center Aircraft Division
NC	Non-Chrome
NESHAP	National Emission Standards for Hazardous Air Pollutants
OSD	Office of the Secretary of Defense
OSHA	Occupational Safety and Health Administration
PAX	Patuxent River
PEL	Permissible Exposure Limit
PEO	Program Executive Office
PPE	Personnel Protective Equipment
RTU	Ready-to-use
SAE	Society of Automotive Engineers
SERDP	Strategic Environmental Research and Development Program
SSPC-VIS	Society for Protective Coatings Visual Standard
TWA	Time Weighted Average
VOC	Volatile Organic Compound
ZVOC	Zero-VOC

ACKNOWLEDGEMENTS

The authors would like to thank the following individuals and organizations for contributing to the content of this overarching report for ESTCP Project WP-200906. Mr. Jacob Waller of Navy FRC-East (Cherry Point, NC) for providing technical support, the ground support equipment and demonstration site used in this effort. Dr. Chris Hovanec of NAWCAD Patuxent River who performed stress corrosion cracking test analyses, Mr. Stephen Ridpath of NAWCAD Patuxent River for his assistance with humidity testing, and Mr. Frank Pepe of NAWCAD Patuxent River who provided the paint facility and equipment used for the laboratory testing portion of this effort. Mr. Tom Considine of Army Research Laboratory for his assistance with test coupon preparation and laboratory testing. Chemetall and Deft for technical product support. Mr. Sean Loftus and Ms. Joanna McVey of NAWCAD Lakehurst for their support with the implementation approval process. Finally, the authors would like to thank the ESTCP Office for providing the funding for this effort as without their support, the benefits from this effort would not have been realized at FRC-East.

EXECUTIVE SUMMARY

OBJECTIVES OF THE DEMONSTRATION

The overall objective of the demonstration at Fleet Readiness Center – East (FRC-E), Cherry Point, NC was to prove out the effectiveness of a non-chromate primer used in conjunction with a zero-volatile organic compound (ZVOC) topcoat on low carbon steel (LCS) ground support equipment (GSE). FRC-E was exhibiting corrosion issues with their GSE and their currently used paint system was not preventing corrosion as they would expect. As a result, a silane-based pretreatment was introduced along with a non-chromate primer and a ZVOC topcoat. Using a systems approach, this demonstration was designed to generate the data necessary for authorization and implementation decisions by appropriate authorities within the Department of Defense (DoD).

TECHNOLOGY DESCRIPTION

The Deft 55W002 ZVOC topcoat qualified to the MIL-PRF-85285 offers the potential for the DoD to go beyond environmental compliance in its painting operations. Since water is used as the primary liquid medium, or as a diluent, formulations based on waterborne resins have much lower volatile organic compound (VOC) levels than their solvent borne counterparts.

The Deft 02GN084 is a high-solids epoxy-polyamide primer qualified to MIL-PRF-23377 Type I, Class N. The Deft 02GN084 provides excellent general surface and galvanic corrosion protection by itself or with a topcoat when used in conjunction with either a Type I or Type II pretreatment from military detail specification MIL-DTL-81706. In addition, the MIL-PRF-23377 primer has a lower VOC content (2.8 lb/gal) compared to the current MIL-DTL-53022 non-chromium primer (3.5 lb/gal) used on GSE.

The silane products investigated, Chemetall Oxsilan 9810/2 and Chemetall Gardobond AP 9809, are phosphorus-free liquids. Oxsilan 9810/2 is slightly acidic with a pH range of 4-6 while Gardobond AP 9809 is basic with a pH of 8 – 10. These silane-based products are intended to enhance the performance of organic coatings. As the film dries, neighboring hydroxyl groups react with each other to form a dense, interpenetrating, crosslinked network that is chemically bound to the metal surface [1].

DEMONSTRATION RESULTS

The laboratory testing was performed using LCS test coupons coated with Oxsilan 9810/2 pretreatment, Deft 02GN084 primer, and ZVOC topcoat. The baseline test coupons were abrasive blasted while the Oxsilan 9810/2 test coupons had a smoothed, milled 100-63 micro inch finish surfaces. No pretreatment was used on baseline test coupons. The ZVOC coating system (MIL-PRF-23377/MIL-PRF-85285 Ty III) was compared to the chemical agent resistant coating (CARC) coating system (MIL-DTL-53022/MIL-DTL-53039) because CARC is the corrosion standard for coatings on military ground vehicles.

ZVOC coating systems successfully met the following performance requirements: dry tape adhesion, wet tape adhesion, pull-off adhesion, cyclic corrosion resistance, and outdoor exposure testing conducted to date. ZVOC coating systems did not meet the performance requirements of

the chip resistance and humidity testing. The humidity objective for ZVOC coating system did not meet the performance requirements; however, the outdoor exposure testing performed to date and the demonstration at FRC-E did not show reason for concern. Laboratory testing results were noted and if performance issues arise in the future, an additional investigation will be performed. The chip resistance objective for Oxsilan 9810/2 did not meet the performance requirement; however, the coating system did meet performance requirements such as adhesion and corrosion resistance that were significant to the needs of FRC-E.

FRC-E Demonstration – B-210 GT Cart and F402 Stands

One B-210 GT cart and two F402 stands were used for the demonstration of Gardobond AP 9809 pretreatment, Deft 02GN084 primer and ZVOC topcoat. This alternative technology was compared to the currently used process of abrasive blast, MIL-DTL-53022 primer, and MIL-PRF-85285, Type I topcoat. The cart and stands coated with the ZVOC topcoat weathered and resisted corrosion comparably to the currently used topcoat. No adhesion or coating degradation (flexibility issues, chalking, fading) issues were shown. Coating systems containing Deft 02GN084 primer showed no significant difference in condition when compared to the currently used coatings for both the cart and the stands. The performance of Gardobond AP 9809 on the cart and stands was comparable to that of the currently used system. This performance outcome validates the importance of adding a pretreatment to the GSE coating process in order to increase the life cycle of the coating system.

IMPLEMENTATION ISSUES

The ZVOC topcoat and non-chromate primer have been incorporated into the NA 17-1-125 manual. The presence of the callout in the manual allows users to implement both products should restrictions be placed on other products such as higher VOC topcoats. Although, the ZVOC topcoat and non-chrome primer performed comparably in the field and are viable options for GSE coatings, FRC-E has decided to not implement the primer and topcoat alternatives. The learning curve associated with successful application of the ZVOC topcoat discouraged FRC-E to pursue implementation. The ZVOC topcoat requires more passes to achieve the same amount of coverage as the currently used topcoat. Based on the demonstration results, FRC-E requested implementation of Gardobond AP 9809 pretreatment for use on GSE. The implementation of Gardobond AP 9809 will change the GSE standard process at FRC-E. This will be the first time that a pretreatment will be added to the standard process. It is anticipated that the addition of Gardobond AP 9809 will increase the GSE life cycle and decrease the down-time due to repair work.

1.0 INTRODUCTION

1.1 BACKGROUND

Military weapons systems are coated for a variety of reasons. In addition to aesthetic appearance, the coating systems must provide countermeasures to satisfy demanding military mission requirements in terms of camouflage, chemical warfare agent resistance, electrical grounding, and electromagnetic shielding. Clearly the most important contribution of the coatings system is protection of these assets from environmental degradation, including corrosion. The annual cost of corrosion for the DoD is approximately $22.5B [2].

A Navy coating system typically consists of an inorganic pretreatment, an epoxy primer, and a polyurethane topcoat. The goal of the surface pretreatment is to provide corrosion resistance and promote adhesion with the subsequent organic coatings. The primers are designed to wet the surface, provide adhesion, and inhibit corrosion. A high solids polyurethane topcoat is applied to the primer surface for further environmental protection and to provide desired optical properties. The coating system as a whole acts to meet protection and mission requirements.

1.1.1 The Need to Reduce VOC Content in Primers and Topcoats

Aircraft painting is a significant source of hazardous waste for the DoD and one of Naval aviation's top generators. Organic topcoats are the primary source of barrier-type protection against environmental degradation for Navy aircraft, weapon systems and support equipment. In addition, these materials provide passive countermeasures against many enemy threats. Unlike other DoD applications, naval aviation topcoats must provide superior protection in a harsh corrosive environment with a thin barrier as to minimize weight for proper payload or operations. The current coatings contain high VOC contents; VOCs are released during painting operations as hazardous air pollutants (HAP). An alternative to using high VOC topcoats has been found. This new topcoat incorporates resins based on novel polymer chemistries into its formulation.

Despite considerable reduction in VOC emissions over the past ten years, Navy FRCs typically generate 30 tons of VOCs per year from coating operations. The Marine Corps emission of VOCs from primers and topcoats can be estimated at 80 tons annually [3]. It is important to address environmental concerns with the existing coating systems before more stringent environmental regulations come into effect.

1.1.2 Uses of Hexavalent Chromium

Many current pretreatments and primers utilize hexavalent chromium (Cr(VI)) for corrosion protection. However, Cr(VI) is an Environmental Protection Agency (EPA) priority pollutant and a known carcinogen. From a performance aspect, Cr(VI) provides excellent corrosion protection until it has all been converted to another chromium species, at which point the corrosion protection capabilities suffer. Cr(VI) is used everywhere that self-healing corrosion protection is required.

1.1.3 Potential Alternatives and Approach to Reducing Hexavalent Chromium

Chromate alternatives generally do not meet all of the performance levels of chromates, but do meet those critical to specific types of applications. For example, most pretreatment alternatives do not exhibit the colors of standard chromate layers and in some cases dyes are added to simulate chromate colors for ease of identification. Other pretreatment alternatives are designed only to improve paint adhesion and do not provide corrosion protection and are not recommended for use on bare metal surfaces.

The approach to reducing/eliminating hexavalent chromium from military coatings systems involves using both chromate-free primers and pretreatments. The primer that was used in this demonstration is military performance specification MIL-PRF-23377, Class N (Deft 02GN084) [4]. The chromate-free pretreatments demonstrated were Chemetall Oxsilan 9810/2 and Gardobond AP 9809. Laboratory evaluations have shown promising results for use of a silane-based surface treatment on steel, specifically, products known as Chemetall Oxsilan 9810/2 and Gardobond AP 9809. These evaluations provided additional data to enable a demonstration decision to be made for the use of the Gardobond AP 9809 product on steel substrates, as well as demonstrate the Deft O2GN084 primer and ZVOC topcoat system on Navy GSE.

1.2 OBJECTIVES OF THE DEMONSTRATION

The overall objective of the demonstration at FRC-E was to prove out the effectiveness of a non-chromate pretreatment and primer used in conjunction with a ZVOC topcoat on LCS GSE. The current process used on GSE at FRC-E includes an abrasive blasted substrate with MIL-DTL-53022 primer and MIL-PRF-85285 Type I topcoat. The demonstration introduced a silane-based, non-chromate pretreatment, Gardobond AP 9809, Deft 02GN084 non-chrome primer and ZVOC topcoat to address corrosion issues currently experienced on GSE at FRC-E. Using a systems approach, this demonstration was designed to generate the data necessary for authorization and implementation decisions by appropriate authorities within the DoD. The demonstration utilized GSE a transportation cart and F402 stands at FRC-E.

1.3 REGULATORY DRIVERS

Numerous federal and state environmental regulations apply to paints and coatings. National Emission Standards for Hazardous Air Pollutants (NESHAP) (40 CFR part 63, subpart GG) states: "VOC emissions from topcoats shall be limited to a VOC content level of no more than: 420 g/L (3.5 lb/gal) of coating (less water and exempt solvents) as applied or 540 g/L (4.5 lb/gal) of coating (less water and exempt solvents) as applied for general aviation rework facilities. VOC emissions from self-priming topcoats shall be limited to a VOC content level of no more than: 420 g/L (3.5 lb/gal) of self-priming topcoat (less water and exempt solvents) as applied or 540 g/L (4.5 lb/gal) of self-priming topcoat (less water) as applied for general aviation rework facilities" [5]. Use of a ZVOC topcoat goes beyond compliance with these and future regulations because the material is non-toxic and does not generate hazardous emissions and/or waste above current regulations as stated above.

Occupational Safety and Health Administration (OSHA) has determined that at the current Cr(VI) permissible exposure limit (PEL) workers face a significant risk to material impairment of their health. The final rule establishes an 8-hour time-weighted average (TWA) exposure limit of 5 micrograms of Cr(VI) per cubic meter of air (5 $\mu g/m^3$). This is a considerable reduction from the previous PEL of 1 milligram per 10 cubic meters of air (1 mg/10 m^3, or 100 $\mu g/m^3$) reported as chromium trioxide (CrO_3), which is equivalent to a limit of 52 $\mu g/m^3$ as Cr(VI).

Additionally, in April of 2009, a memo from Office of the Secretary of Defense (OSD) was released outlining a new policy for reducing the use of Cr(VI) for DoD applications [6]. This memo:

- Directs the military to approve the use of Cr(VI) alternatives where they perform adequately for the intended application and operating environment.
- Directs the military to update relevant technical documents and specifications to authorize the use of qualified alternatives.
- Requires Program Executive Office (PEO), or equivalent in coordination with the Military Department's Corrosion Control and Prevention Executive (CCPE), to certify that there is no acceptable alternative to the use of Cr(VI) on a new system if there is intent to use Cr(VI) materials.

Effectively, the memo directs DoD military departments to restrict the use of Cr(VI) unless no cost-effective alternative with satisfactory performance was identified.

2.0 DEMONSTRATION TECHNOLOGY

The alternative coatings can, in many cases, be used in place of the abrasive blasting and direct-to-metal painting process that is currently being used. The technologies demonstrated were a ZVOC topcoat, a NC primer, and a silane-based spray-applied pretreatment for steel substrates. All technologies are commercially available products – Deft 55W002 ZVOC topcoat, Deft 02GN084 NC primer, and Gardobond AP 9809 pretreatment. Figure 2-1 shows a diagram for the coating system demonstrated on LCS GSE.

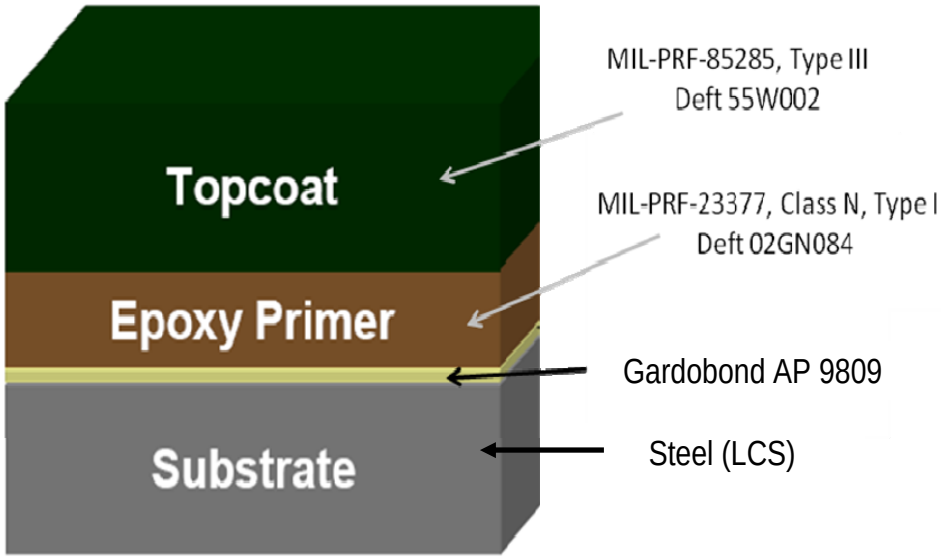

Figure 2-1: Coatings System Diagram for LCS GSE Demonstration at FRC-E

2.1 TECHNOLOGY DESCRIPTION

2.1.1 Technology Description: Deft 55W002 (MIL-PRF-85285, Type III) ZVOC Topcoat

The Deft 55W002 ZVOC topcoat qualified to the MIL-PRF-85285 [7] offers the potential for the DoD to go beyond environmental compliance in its painting operations. Topcoats for military fixed-wing aircraft used by the Navy and Air Force are aliphatic polyurethanes formulated to meet their demanding requirements. Ground and/or carrier conditions can be severely corrosive, so coatings used on Naval aircraft are designed to maximize corrosion protection. The ZVOC coating evolved from previous efforts including the development of a waterborne topcoat that had a VOC content of 210 g/l and the investigation of less viscous binder systems for aircraft coatings. Currently used aircraft topcoats contain VOC contents of 420 g/l. Results from these studies indicated that high-performance topcoats could be developed from water-dispersible, novel polymer resins [8]. These studies validated the use of waterborne technology for formulating coatings and that improvements could be achieved through manipulation of polymer backbone chemistry. The success obtained from these efforts attested to the feasibility of a ZVOC topcoat for Naval aircraft applications.

A ZVOC topcoat was developed under a joint Navy-industry effort that was funded by Strategic Environmental Research and Development Program (SERDP) Project PP-65 [9]. This topcoat, formulated by Deft Coatings, Inc., was based on a novel urethane chemistry that requires no co-solvent. Through manipulation of the polymer backbone chemistry and the evolution of new surface-active and rheological additives, a water-reducible polyurethane binder system was developed that contains no organic solvents and emits no HAPs. The ZVOC topcoat offers the potential for the DoD to go beyond environmental compliance in its painting operations.

Deft developed a "55 Series" product line that is composed of waterborne, two-component polyurethane topcoats suitable for exterior application on aircraft and GSE. Component A is a pigmented, waterborne polyester polyol resin. Component B is a clear, non-pigmented aliphatic polyisocyanate resin, which acts as a hardener or curing agent for Component A. When the "55 Series" polyurethane topcoats are used over an epoxy primer, they provide protection against weathering, humidity and salt spray. The cured films are resistant to jet fuels, lubricating oils and hydraulic fluids. The "55 Series" polyurethane topcoats meet current standards for high/low temperature flexibility and impact resistance. The 55W002 product that is qualified as a MIL-PRF-85285, Type III, Class W coating was used for this demonstration.

2.1.2 Technology Description: Deft 02GN084 (MIL-PRF-23377, Type I, Class N) Primer

While there are various chromate alternatives available, by far the most widely used primers are the general surface epoxy-polyamide coatings. These primers provide the basis for corrosion protection across substrates, surface conditions, interfaces, environmental exposures, and coating systems. One of the two primer specifications of interest for DoD aviation, the primary users of chromated primers, is MIL-PRF-23377 [4].

The Deft 02GN084 is a high-solids epoxy-polyamide primer qualified to MIL-PRF-23377 Type I, Class N. Previous testing to date at NAVAIR, has shown the Deft 02GN084 to be the best commercially available non-chromated primer for aviation and other applications using aluminum alloys. The testing has shown this to be especially true when coupled to other galvanically dissimilar materials like titanium, corrosion-resistant steel (CRES), and carbon-fiber composite. The Deft 02GN084 provides excellent general surface and galvanic corrosion protection by itself or with a topcoat when used in conjunction with either a Type I or Type II pretreatment from military detail specification MIL-DTL-81706 [10]. In addition, the Deft 02GN084 primer has a lower VOC content (2.8 lb/gal) compared to the current MIL-DTL-53022 non-chromium primer (3.5 lb/gal) used on GSE.

Deft 02GN084 is a mature technology with broad characterization data available. It is a current state of the art product and is the best MIL-PRF-23377, Type I available alternative. Naval Air Warfare Center Aircraft Division – Patuxent River (NAWCAD – PAX) is involved with a number of demonstrations/validations or transitions of Deft 02GN084, some of which include the following: NAVAIR T-45, NAVAIR Tie-Coat, NAVAIR E-2, US Army Aviation, and USAF F-15. Laboratory testing conducted at Army Research Laboratory (ARL) and

NAWCAD – PAX has shown an increased benefit to corrosion resistance when using this primer on steel substrates [11].

2.1.3 Technology Description: Pretreatments (Chemetall Oxsilan 9810/2 and Chemetall Gardobond AP 9809)

The silane products investigated, Oxsilan 9810/2 and Gardobond AP 9809, are phosphorus-free liquids. Oxsilan 9810/2 is a high-performance, silane/zirconium-based pretreatment that is normally rinsed off after coating. Gardobond AP 9809 is an easy-to-use, pH neutral, silane/titanium-based, dry-in-place pretreatment [12]. Oxsilan 9810/2 is slightly acidic with a pH range of 4-6 while Gardobond AP 9809 is basic with a pH of 8 - 10. These silane-based products are intended to enhance the performance of organic coatings. When applied to the substrate, the Oxsilan 9810/2 and Gardobond AP 9809 organo-silane polymers react at room temperature with the hydroxides present in the metal oxide layer of the cleaned metal substrates. This reaction forms strong covalent bonds between the coating and the metal substrate. As the film dries, neighboring hydroxyl groups react with each other to form a dense, interpenetrating, crosslinked network that is chemically bound to the metal surface [1]. Oxsilan 9810/2 and Gardobond 9809 are formulated for use on multiple metals including steel, iron, aluminum, and zinc substrates. They are free of any regulated heavy metals and are applied at ambient temperature by either spray or immersion [1].

The selection of the Oxsilan 9810/2 and Gardobond AP 9809 products as pretreatments in this demonstration was based on several factors: 1) the laboratory results for Oxsilan 9810/2 were favorable versus other alternatives and the baseline technologies targeted for replacement [13], 2) Oxsilan 9810/2 and Gardobond AP 9809 products are more desirable because they contain no chrome, and 3) FRC-E has experimented with the Gardobond AP 9809 product in the past and is comfortable with the product requiring a dry-in-place process [14].

Preliminary work performed by FRC-E in an effort funded by Defense Logistics Agency (DLA) supported the use of the Gardobond AP 9809 pretreatment in this demonstration [15]. Currently, the coating system for steel GSE structures consists primarily of abrasive blast/no pretreatment, MIL-PRF-53022 Type II epoxy primer and either a MIL-PRF-85285 Type I polyurethane topcoat.

Figures 2-4 and 2-5 are schematics of the spray-applied processes for Oxsilan 9810/2 and Gardobond AP 9809 that were investigated at FRC-E.

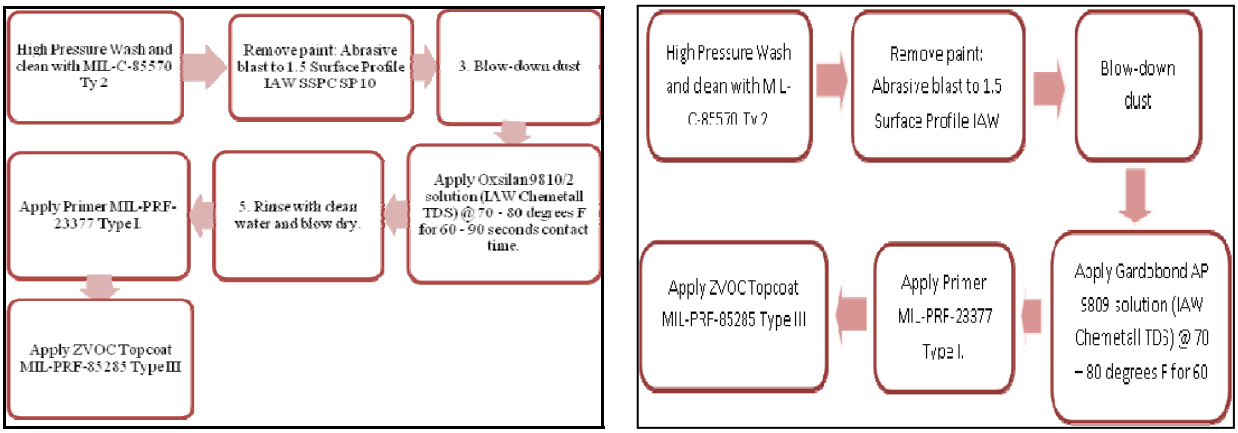

Figure 2-2: Schematics of the Oxsilan 9810/2 Coating Process (left) used on LCS Witness Coupons and Gardobond AP 9809 Coating Process (right) used on LCS GSE for FRC-E Demonstration

2.2 ADVANTAGES AND LIMITATIONS OF THE TECHNOLOGY

The advantages and limitations of the demonstrated technologies as compared to the current process used for GSE at FRC-E are listed in the following sub-sections.

2.3.1 ZVOC Topcoat (MIL-PRF-85285, Type III)

Advantages:

- The new topcoat will require no additional maintenance than that required by standard coating systems.
- Avoidance of hard emission controls and fines.
- Elimination of VOCs from the topcoating process.
- Reduced waste generated costs and waste disposal costs.
- Improved safety for worker exposure/facility environment.

Limitations:

- Learning curve associated with the application of a new coating.
- Waterborne systems require more pre-paint surface preparation.
- Required multiple cross-coat applications. The standard operating procedure for FRC-E GSE paint shop is one heavy cross-coat application to achieve sufficient coverage over parts.

2.3.2 Deft 02GN084 (MIL-PRF-23377, Type I, Class N) Primer

Advantages:

- The new primer will require no additional maintenance than that required by standard coating systems.
- Avoidance of hexavalent chromium.

- Reduced waste generated costs and waste disposal costs.
- Improved workspace/facility environment.
- When used by shop personnel, the primer sprayed well and achieved uniform coverage in one coat.

Limitations:

- Non-chromate primers are more susceptible to pre-paint surface preparation.
- Deft 02GN084 primer costs twice as much as currently used MIL-DTL-53022 primer.

2.3.3 Chemetall Oxsilan 9810/2 Pretreatment

Advantages:

- Has a history of improving coating adhesion on steel.
- Improves performance of organic coatings by providing better adhesion of the primer.
- Easy to apply, drop in replacement for chromates.
- Low process risk of stress corrosion cracking.
- No hexavalent chromium.
- The ability to spray-on and force dry after a 1-minute dwell time allows for minimal disruption to production schedules.
- Ready-to-use (RTU) formulation reduces mixing and pH adjustment error

Limitations:

- Requires some personal protection equipment.
- Not designed to provide uncoated corrosion protection or flash rust inhibition.
- No color change to substrate surface making full coverage difficult to detect.
- Requires a rinse after application.

2.3.4 Chemetall Gardobond AP 9809 Pretreatment

Advantages:

- Has a history of improving coating adhesion on steel.
- Improves performance of organic coatings by providing better adhesion of the primer.
- Easy to apply, drop in replacement for chromates.
- No hexavalent chromium.
- Does not require a rinse after application.
- The ability to spray-on and force dry after a 1-minute dwell time allows for minimal disruption to production schedules.

Limitations:

- Requires some personal protection equipment.
- Not designed to provide uncoated corrosion protection or flash rust inhibition.
- No color change to substrate surface making full coverage difficult to detect.
- Requires mixing prior to application, therefore introducing potential mixing and pH adjustment error.

3.0 PERFORMANCE OBJECTIVES

The performance objectives with acceptance criteria for the demonstrated technologies were evaluated in accordance with the tests delineated in the Joint Test Protocol (JTP) [16]. The functional performance objectives are summarized in Table 3-1.

Table 3-1: Performance Objectives for ZVOC Coating System over Two Non-Chrome Steel Pretreatments

Performance Objective	Data Requirements	Success Criteria	Results	
Quantitative Performance Objectives			**Oxsilan 9810/2 (Laboratory Test)**	**Gardobond AP 9809 (Field Test)**
Adhesion Test	ASTM-4541 Pull-off Adhesion	No interlayer pull-off failure between topcoat and primer shall be below 1200 psi.	Met	N/A
	ASTM- D3359 Dry Adhesion	Adhesion rating (steel) ≥ 4B.	Met	Met*
	Modified ASTM D3359/ FED STD 141, Method 6301.3 Wet Adhesion	Scribed area rating (steel) ≥ 3A after 24 hours at ambient.	Met	Met*
Chip Resistance	SAE-J400	After one cycle, chip rating NLT 5B for steel.	Not Met**	N/A
Accelerated Corrosion	GM-9540P ASTM D 1654	After 60 cycles: steel substrate rating ≥ 5, scribed.	Met	N/A
Humidity Testing	ASTM D2247 MIL-PRF-85285	After 30 days exposure, the coating shall not exhibit any signs of color change, blistering, loss of adhesion or softening.	Not Met***	N/A
Field Exposure, Static	Tropical climate Cape Canaveral ASTM D 1654 ASTM G50	Three years of exposure: coupon has a minimum of 25% less creepage from scribe than current corrosion protection system	N/A	N/A
Toxicity Clearance	Toxicity clearance and full disclosure from CHPPM	Approved by processing facility	Met	N/A
Processing time	TT-C-490	Equivalent or less than existing process	Met	Met
Field Testing, On-Vehicle	ASTM D 1654 ASTM D 714 01-1A-509-2, Wet Tape Adhesion	Equivalent or better than existing process	N/A	Met

Qualitative Performance Objectives				
Ease of use	Feedback from field technician on usability of technology and time required during demonstration	No operator training required	N/A	Met

* Preliminary Testing performed by FRC-E [14].
** The chip resistance objective for Oxsilan 9810/2 did not meet the minimum performance requirement. However, Oxsilan 9810/2 did meet performance requirements such as adhesion and corrosion resistance that were significant to the needs of FRC-E.
*** The humidity objective for ZVOC coating system did not meet the performance requirements; however, the outdoor exposure testing performed to date and the demonstration at FRC-E did not show reason for concern. Laboratory testing results were noted and if performance issues arise in the future, an additional investigation will be performed.

4.0 SITE/PLATFORM DESCRIPTION

4.1 Test Platforms/Facilities

FRC-E was selected as a site for the demonstration for several reasons. FRC-E was exhibiting corrosion issues with their GSE and had expressed the need for a solution. The currently used paint system was not preventing corrosion as they would expect. The paint systems on GSE were all experiencing similar corrosion failures. By demonstrating the Deft 02GN084 primer and the Deft 55W002 ZVOC topcoat, in conjunction with the Gardobond AP 9809 product, the corrosion resistance of the GSE was expected to improve. Additionally, NAWCAD-PAX has maintained a long-standing, productive working relationship with FRC-E through previous laboratory and demonstration efforts. These factors provided this demonstration with the best chance of success. All of the work was performed on-site at FRC-E. During the demonstration, GSE were maintained and operated on-site at FRC-E, therefore enabling them to be easily tracked.

4.2 Present Operations

A typical coating system is defined as a three part process: pretreatment in direct contact with a properly prepared substrate, followed by an epoxy primer, and a polyurethane-based topcoat. FRC-E uses a direct-to-metal MIL-DTL-53022 primer and MIL-PRF-85285 polyurethane topcoat with VOC content >50 g/L. No chemical pretreatment is used. Figure 4-1 is a flow diagram for the currently used GSE paint process at FRC-E.

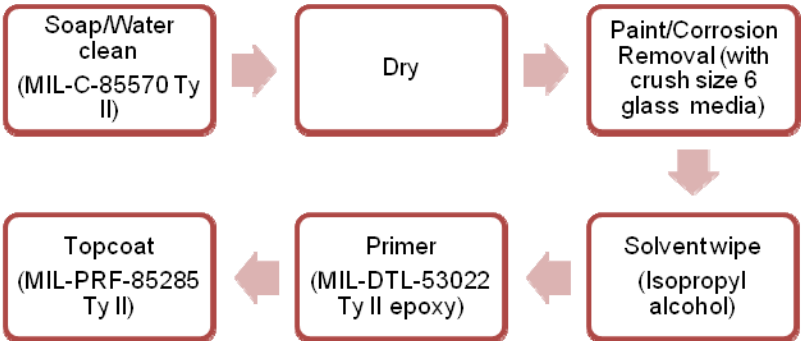

Figure 4-1: Typical Flow Diagram of the Current Process for GSE at FRC-E

The demonstrated process was not expected to add an additional step to the current process because the solvent wipe would be omitted and replaced with the pretreatment in order to incorporate the silane-based product. The addition of the Gardobond AP 9809 pretreatment and the use of the Deft 02GN084 primer and the ZVOC topcoat was expected to significantly decrease time between maintenance cycles by providing improved corrosion protection. The additional time required for the pretreatment step would be far less than the time saved between maintenance cycles.

4.3 Site-Related Permits and Regulations

Additional site related permits or regulations were not required for the demonstration to be conducted at FRC-E. The facility has had the capability to process and apply pretreatments, primers and topcoats. FRC-E also holds the necessary documentation to perform the demonstrated chemical pretreatments and dispose of any waste if necessary.

5.0 TEST DESIGN

5.1 Conceptual Experimental Design

In order to provide FRC-E with an optimal coating system to enhance corrosion prevention, it was decided to incorporate the Gardobond AP 9809 pretreatment with the Deft 02GN084 primer and the ZVOC topcoat for demonstration purposes. Gardobond AP 9809 was selected over the Oxsilan 9810/2 based upon the preliminary work performed at FRC-E and their preference for a dry-in-place product [11]. It is anticipated that the use of a full coating system (pretreatment/primer/topcoat) will decrease costs by increasing the coating life cycle of the GSE and decreasing the down-time for repairs/rework. The details of the laboratory testing are provided in the Final Report [11]. The Oxsilan 9810/2 was laboratory validated on LCS test coupons in accordance with the JTP [16]. In addition to the laboratory validation, field testing of Gardobond AP 9809 on GSE components was conducted.

All experiments were conducted using 4” x 6” x 3/16” test coupons fabricated from LCS A366 steel substrate. The LCS test coupons remained as-received and had a smooth ground surface finish of approximately 100-63 micro-inches (μ in). Oxsilan 9810/2 pretreatment was applied by Chemetall representatives in order to eliminate inconsistencies in the processes. The primer and topcoats were applied by the ARL personnel at NAWCAD-PAX. A test matrix was developed to evaluate the ZVOC (MIL-PRF-23377/MIL-PRF-85285) and CARC (MIL-DTL-53022/MIL-DTL-53039) coating systems on LCS.

Table 5-1 lists all performance testing requirements identified by stakeholders for evaluating candidates on commonly used steel substrates. Additional details on testing and performance criteria can be found in the final report [11].

Table 5-1: Performance Testing Requirements

Section	Test	Acceptance Criteria			Test Method References
		Minimum Performance	Improved Performance	Best Performance	
5.1.2.1	Adhesion (Dry)	Adhesion rating (steel) ≥ 4B	N/A	Adhesion rating (steel) = 5B	ASTM D3359
5.1.2.2	Adhesion (Wet)	Scribed area rating ≥ 3A after 24 hours at ambient;	Scribed area rating ≥ 3A after 96 hours at 120°F;	Scribed area rating ≥ 4A after 168 hours at 150°F;	Fed-Std 141, Method 6301.3 ASTM D3359
5.1.2.3	Adhesion (Pull-off)	Minimum average 30 events rating of 1200 PSI	Minimum average 30 events rating of 1800 PSI	Minimum average 30 events rating of 2500 PSI	ASTM D 4541
5.1.2.4	Corrosion Resistance (Cyclic)	After 60 cycles: average rating ≥ 5 scribed	After 60 cycles: average rating ≥ 7 scribed	After 60 cycles: average rating ≥ 9 scribed	GM 9540P ASTM D714 ASTM D1654
5.1.2.5	Chip Resistance	After one cycle, chip rating NLT 5B	After one cycle, chip rating NLT 7C	After one cycle, chip rating NLT 9C	SAE J400
5.1.2.6	Humidity Resistance Test	There shall be no signs of blistering, softening, or exhibiting any loss of adhesion for no less than 30 days exposure in a humidity cabinet maintained at 49C +/- 2C (120F +/-3F) and 100% relative humidity (RH)			ASTM D2247 MIL-PRF-85285

NLT = not less than

Dry tape adhesion testing was performed to assess the adhesion of coatings to substrates by applying and removing pressure-sensitive tape over cuts made in the coating [13]. Dry tape adhesion tests were conducted at room temperature as defined in ASTM D 3924. The adhesion was rated and data was reported in accordance with ASTM D3359, Test Method B.

Wet tape adhesion testing was performed to assess the wet adhesion of coatings to metallic substrates by applying and removing pressure-sensitive tape over cuts made in the coating [13]. Wet tape adhesion tests were conducted at 24 hours and 96 hours using a modified version of ASTM D 3359 and FED-STD-141, Method 6301.3. The adhesion was rated and data was reported in accordance with ASTM D3359, Method A.

Pull-off adhesion testing was performed to evaluate the pull-off strength (commonly referred to as adhesion) of a coating by determining either the greatest perpendicular force (in tension) that a surface area can bear before a plug of material is detached, or whether the surface remains intact at a prescribed force (pass/fail). Failure will occur along the weakest plane within the system comprised of the test fixture, adhesive, coating system, and substrate, and will be exposed by the fracture surface. The average results of each set of data were rated and data was reported in accordance with ASTM D 4541.

Cyclic corrosion resistance testing was conducted to determine cosmetic corrosion performance. This test provides a combination of cyclic conditions (salt solution immersion, temperature, and humidity) to accelerate the corrosion process. Testing was conducted in accordance with GM 9540P. Test coupons were evaluated and reported per ASTM D1654 for scribed areas and ASTM D714 for unscribed areas.

Chip resistance testing was performed to reproduce the effect of gravel or other media striking exposed painted and/or coated surfaces of a vehicle and has been correlated to actual field results. The purpose of this test is to evaluate the chip resistance of flat test coupons incorporating the alternative technologies. Test coupons evaluated in accordance with SAE J400. Coupons were rated and data was reported using SAE J400.

Humidity testing was performed to evaluate the water resistance of coatings by exposing coated coupons in an atmosphere maintained at 100% relative humidity so that condensation forms on the test coupons. This test was performed in accordance with ASTM D 2247 and MIL-PRF-85285. Coupons were rated and data was reported in accordance with ASTM D 2247 and MIL-PRF-85285.

Outdoor exposure testing was performed to determine coating performance when exposed to real world environmental conditions. Observations were reported in accordance with ASTM D 1654 and ASTM G 50.

5.2 Field Test Requirements

In addition to the laboratory validation described in the previous section, field testing of ZVOC topcoat, and Deft 02GN084 primer in conjunction with Gardobond AP 9809 pretreatment were initiated for use on GSE at FRC-E. The metric for evaluating the GSE during periodic inspections was a visual comparison with the GSE using the Society for Protective Coatings Visual Standard (SSPC-VIS 2) [17]. All details of the field testing are provided in the Final Report [11]. Table 5-13 lists Field Testing requirements identified and required by FRC-E for evaluating alternative technologies.

Table 5-2: Field Testing Requirements for GSE at FRC-E

JTP Section	Test	Acceptance Criteria, Minimum Performance (MP)	Acceptance Criteria, Improved Performance (IP)	Acceptance Criteria, Best Performance (BP)	Test Method References	Branch/ Stakeholders/ Service Requiring Test
4.4.7	Field Exposure, On-Vehicle	Three years exposure greater than or equal to the base vehicle baseline sample using SSPC-VIS 2 [17]	Four years exposure greater than or equal to the base vehicle baseline sample using SSPC-VIS 2 [17]	Five years exposure greater than or equal to the base vehicle baseline sample using SSPC-VIS 2 [17]	ASTM D1654 ASTM D714	As required by the invoking authority

The demonstration was initiated on a transportation cart and two F402 stands at FRC-E during April 2011. Many of the FRC-E shops use Taylor-Dunn model B-210 GT cart to transport workers and materials. These carts are constructed of low alloy steel and each cart weighs approximately 1.5 kilo pounds. The F402 engine (AV-8B Harrier) stand components are reworked on custom stands which assist with transport and repair work. When not in use by parent repair shops, these stands are stored outside. As such, these stands demand robust coating

systems to protect them from the elements, and are good candidates for testing. Stands are constructed of low-alloy steel. Schematics for the B-210 GT cart and F402 stands are shown in Figure 5-1.

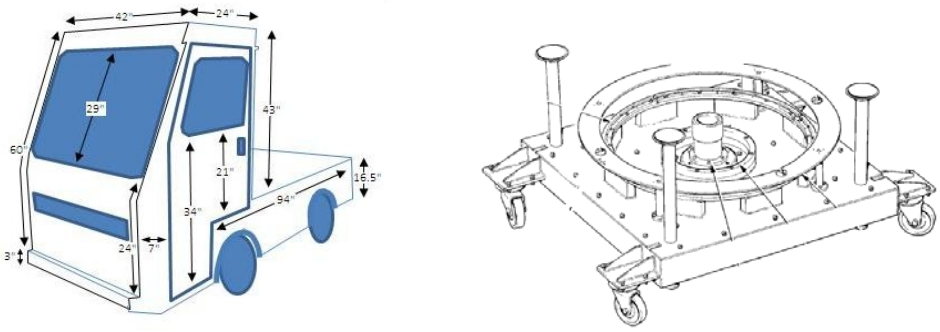

Figure 5-1: Schematic of B-210 GT cart (left) and F402 stand (right) used in the demonstration at FRC-E

Gardobond AP 9809 was applied to GSE in accordance with the manufacturer's required procedures. The Gardobond AP 9809 was used at a 2% dilution from the concentrated formula. Environmental controls for the application are limited to a minimum GSE surface temperature of 70°F and an application dwell of 60-90 seconds. The product was spray-applied to the GSE. Once pretreated, all of the GSE were stored 12 – 24 hours at ambient shop conditions (60%-70% relative humidity) to duplicate actual coating process lines and to evaluate flash rust inhibition. Deft 02GN084 primer and ZVOC topcoat were applied in accordance with manufacturers required procedures. Stand 2 represents the test baseline, as it was processed per the traditional GSE cleaning and coating procedures. Application details for the F402 stands and B-210 GT cart are shown in Tables 5-3 and 5-4.

Table 5-3: Coating Systems Used on F402 Stands

Stand	Pretreatment	Primer	Topcoat
1	Gardobond AP 9809	Deft 02GN084	ZVOC
2	None	Deft 02GN084	MIL-PRF-85285, Type I
3	None	MIL-DTL-53022	MIL-PRF-85285, Type I

Table 5-4: Coating Systems Used on the B-210 GT Cart

Cart Area	Pretreatment	Primer	Topcoat
Left Side Test Area	Gardobond AP 9809	MIL-DTL-53022	ZVOC
Right Side Test Area	Gardobond AP 9809	Deft 02GN084	ZVOC
Remainder*	Abrasive Blast	MIL-DTL-53022	MIL-PRF-85285, Type I

*Area not re-worked for demonstration. These sections had been coated prior to April 2011.

Witness panels attached to the B-210 transportation cart were coated with Oxsilan 9810/2 and either ZVOC coating system or baseline FRC-E coating system (MIL-DTL-53022 and MIL-PRF-85285 Type I/II). Additional information is provided in the final report [11].

6.0 PERFORMANCE ASSESSMENT

6.1 Laboratory Testing Results

The following laboratory test results were from LCS test coupons with Oxsilan 9810/2 pretreatment, Deft02GN084 primer, and ZVOC topcoat. As previously mentioned, the baseline test coupons were abrasive blasted while the Oxsilan 9810/2 test coupons had a smoothed, milled 100-63 micro inch finish surfaces. No pretreatment was used on baseline ZVOC or CARC test coupons. The CARC coating system was used as a lab test comparison because it is the corrosion standard for coatings on military ground vehicles.

Dry tape adhesion test results show a slight performance increase with the use of a ZVOC coating system compared to the CARC coating system for abrasive blast coupons. For Oxsilan 9810/2 coated coupons, the CARC coating system shows a slight performance increase when compared to the ZVOC coating system. Use of Oxsilan 9810/2 increased the adhesion performance for LCS with both ZVOC and CARC coating systems. In accordance with ASTM D 3359, both the ZVOC baseline and Oxsilan 9810/2 test coupons and the CARC coated Oxsilan 9810/2 coupons met the performance requirement. However, the CARC baseline coupons did not meet performance requirements.

Wet tape adhesion test results show a performance increase with the use of CARC coatings systems for 24 hour wet tape adhesion and a performance increase with the use of ZVOC coatings for 96 hour wet tape adhesion. The use of Oxsilan 9810/2 had no real influence on the wet tape adhesion properties when used in conjunction with a CARC or ZVOC coating system. All test coupons met wet adhesion performance requirements and rated either a 4A or 5A in accordance with ASTM D 3359.

Pull-off adhesion test results show the ZVOC coating system significantly outperformed the CARC coating system regardless of how the substrate was prepared. All test coupons for both ZVOC and CARC coating systems met pull-off adhesion performance requirements in accordance with ASTM 4541.

Chip resistance test results show a slight performance increase with the use of a ZVOC coating system for abrasive blast coupons compared to a CARC coating system. For Oxsilan 9810/2 coated coupons, the CARC coating system shows a slight performance increase when compared to the ZVOC coating system. Abrasive blast ZVOC coating system and Oxsilan 9810/2 CARC coating system met chip resistance performance requirements in accordance with SAE J400; however, the Oxsilan 9810/2 ZVOC coating system and abrasive blast CARC coating system did not. Chip resistance is not as critical for basic ground support equipment as it would be for tactical vehicles. Thus for GSE, the chip resistance for ZVOC or CARC is considered adequate with either method of pretreatment.

Table 6-1 shows the results from adhesion and chip resistance testing.

Table 6-1: Average Rating Results for Coating Adhesion and Chip Resistance

	ZVOC					CARC				
Pretreatment	Dry Tape Adhesion	Wet Tape Adhesion		Pull-Off Adhesion (psi)	Chip Resistance	Dry Tape Adhesion	Wet Tape Adhesion		Pull-Off Adhesion (psi)	Chip Resistance
		24 hr	96 hr				24 hr	96 hr		
Abrasive Blast only	4	4	5	3443	5B	3.7	5	4	1721	4B
Oxsilan 9810/2	4.5	4	5	3112	4B	5	5	4	1769	5B

Corrosion resistance tests show a performance increase with the use of a ZVOC coating system compared to a CARC coating system. The performance of the Oxsilan 9810/2 ZVOC coating system was slightly better than the abrasive blasted ZVOC coating system. The performance of the Oxsilan 9810/2 CARC coating system was slightly better than the abrasive blasted CARC coating system. All test coupons were tested in accordance with GM 9540P and rated in accordance with ASTM D 1654. Test results are shown in Table 6-2.

Table 6-2: GM9540P Cyclic Corrosion Resistance Average Results for LCS

Scale:	10	9	8	7	6	5	4	3	2	1	0
Steel	<----------PASS---------->					<----------FAIL---------->					

Creep from Scribe		10 cycles	20 cycles	40 cycles	60 cycles	80 cycles
CARC	Abrasive blast LCS	8	6.33	3.33	1.66	0
CARC	Oxsilan 9810/2	6	5.33	4.33	2.33	0.66
ZVOC	Abrasive blast	8	7.33	5.33	4	2.33
ZVOC	Oxsilan 9810/2	8	6.66	5	4	3.33

Table 6-3 shows LCS results for humidity testing for ZVOC and CARC coating systems. Humidity resistance tests show a performance increase with the use of Oxsilan 9810/2 CARC coating system compared the abrasive blast CARC coating system and both ZVOC coating systems. The ZVOC and CARC coating systems on abrasive blasted baseline test coupons exhibited blistering and failed the minimum of 30 days required in the humidity test chamber in accordance with MIL-PRF-85285 and ASTM D 2247. The blistering that occurred was small and spread evenly throughout the coating system of the affected test coupons. These laboratory testing results were noted and if performance issues arise in the future on GSE, an additional investigation will be performed. The only coating combination to successfully pass the minimum of 30 days required in the humidity test chamber, with no blistering exhibited, was the Oxsilan 9810/2 with the CARC system.

Table 6-3: ASTM D2247 Rating for LCS after in the Humidity Chamber Set at 100% RH and 120°F

	Process Parameter		**Humidity Test (120°F and 100% RH – After 30 days)**
Type of Steel	**Pretreatment**	**Coating System**	
Low Carbon	Abrasive Blast	ZVOC	Fail
Low Carbon	Chemetall Oxsilan	ZVOC	Fail
Low Carbon	Abrasive Blast	CARC	Fail
Low Carbon	Chemetall Oxsilan	CARC	Pass

A full assessment of outdoor exposure testing at Cape Canaveral cannot be made until after the full three years of exposure. Testing to date shows a slight performance increase with the use of the Oxsilan 9810/2 ZVOC coating system and abrasive blast CARC coating system. Test coupons were rated in accordance with ASTM D 1654 at 6 month intervals. Results are shown in Table 6-4.

Table 6-4: ASTM D1654 Ratings for LCS in Outdoor Exposure after 2 years

Scale:	10	9	8	7	6	5	4	3	2	1	0
Steel	<----------PASS---------->					<----------FAIL---------->					

Creep from Scribe		**6 months**	**1 year**	**1.5 years**	**2 years**
CARC	Abrasive blast	9	5.66	5.66	5.33
CARC	Oxsilan 9810/2	7.66	5.66	5	3.66
ZVOC	Abrasive blast	6.66	6.66	4.66	4.33
ZVOC	Oxsilan 9810/2	8	6.66	5.66	5

6.2 FRC-E Demonstration

After two years of environmental exposure at FRC-E, two F402 stands and a B-210 GT cart were inspected for signs of degradation/rust using rating criteria from SSPC-VIS 2. It should be noted that the stands alternated between indoor and outdoor locations. The transportation cart was stationed outdoors. Table 6-5 lists performance criteria for the demonstration and states if criteria was met.

Table 6-5: Validation Methods and Expected Performance Metrics for Demonstrating ZVOC Coating System on F402 Stands and a B-210 GT Cart

Performance Criteria	**Expected Performance Metric (Pre-Demonstration)**	**Performance Evaluation Method**	**Actual Performance (Post-Demonstration)**	
Primary Performance Criteria			**F402 Stands**	**B210 Cart**
Product Testing	The performance of the alternative technology will meet or exceed the current process employed on GSE during manufacturing or rework as defined in the JTP in Appendix B.	Field testing	Met	Met
Hazardous Materials	Maintains a chromate-free platform and reduce or eliminate VOC from process	Assessment of product constituents and previous studies	Met	Met
Hazardous Waste	Meets or exceeds current process used in GSE rework	Operating experience and assessments	Met	Met
Factors Affecting Technology Performance	Comparison of alternatives in identical operating conditions	Operating Experience	Met	Met
Secondary Performance Criteria				
Ease of Use	Man hours and training shall be equivalent to current process used in GSE rework	Operating experience	Not Met*	Not Met*
Maintenance	Requirements for record keeping for storage, and clean up shall be equivalent to current process	Compare records	Met	Met
Scale up capability	No additional equipment will be necessary to scale up process for full GSE treatment.	Operating experience and investigation	Met	Met

*The ZVOC topcoat is more difficult to apply. The application method of this topcoat discouraged FRC-East from pursuing implementation. The ZVOC has low deposit efficiency which requires more spray passes to achieve the same amount of coverage as the currently used topcoat, MIL-PRF-85285 Type I. Although the performance has been comparable thus far, there is no desire for FRC-E to switch to ZVOC until environmental regulations require them to do so.

6.2.1 Demonstrated GSE - F402 Stands

A full assessment of the demonstration at FRC-E cannot be made until after the full three year timeframe. It should be noted that the stands have been exposed to outdoor and indoor conditions. Demonstration to date shows the ZVOC topcoat weathered and resisted corrosion comparably to baseline topcoated (MIL-PRF-85285 Ty I) surfaces of the F402 stands. No adhesion or coating degradation (flexibility issues, chalking, fading) issues were shown. Coating systems containing Deft 02GN084 primer showed no significant difference in condition when compared to current, MIL-DTL-53022 primed systems.

The majority of corrosion took the form of pinpoint rust, with isolated rust spots. Using the SSPC-VIS 2 rating system, the stand with the Gardobond AP 9809 ZVOC coating system is outperforming the stands with the abrasive blast Deft 02GN084 primer and abrasive blast MIL-DTL-53022 primer in conjunction with the baseline topcoat. The Gardobond AP 9809 ZVOC coating system was comparable to the stand with the abrasive blast baseline system (MIL-DTL-53022 primer and MIL-PRF-85282 Type I), although some abrasion in spots caused the baseline system to be completely removed as this stand bumped or rubbed against another material that caused the coating to be removed. There was no evidence the other stands came into contact with this material. This performance outcome validates the importance of adding a pretreatment to the GSE coating process and supports the continued use of ZVOC coating system in order to increase the life cycle of the GSE coating system.

6.2.2 Demonstrated GSE – B-210 GT Cart

The transportation cart surfaces coated with the ZVOC topcoat have weathered and resisted corrosion comparably to baseline topcoated (MIL-PRF-85285 Ty I) surfaces. No adhesion or coating degradation (flexibility issues, chalking, fading) issues were shown. The coating systems showed no significant difference in condition when compared to the currently used baseline system.

The GSE cart did not exhibit pinpoint rusting similar to what was seen on the F402 stands. Isolated rust spots were observed, but only near crevice areas where coating coverage may have been low. Overall, the coating systems were in excellent condition when assessed in accordance with SSPC-VIS 2, with no rusting evident on the general body of the structure. The performance of Gardobond AP 9809 on the B-210 GT cart was comparable to that of the baseline coating system. Results to date support the continued use of ZVOC coating system in addition to Gardobond AP 9809 pretreatment.

7.0 COST ASSESSMENT

7.1 Cost Model

A life-cycle cost analysis was performed during the project by comparison of current coatings system costs versus new coatings system costs. To achieve this, costs for procurement of topcoat, primer and pretreatment in addition to labor costs for coating GSE were tracked. It was anticipated that personnel protective equipment (PPE) costs, hazardous waste treatment costs, and energy costs would remain the same. The disposal cost of the pretreatment, classified as #9102 by the Hazardous Waste Group at FRC-East, is $0.31 per pound. If the concentrate was mixed with water to the exact amount needed for coating, then the cost would be associated with filter disposal in the paint booth and include overspray from all coating materials on other components, so using the #9102 cost as a basis should be appropriate. Cost estimates for waste fees were provided by FRC-E. The following cost estimates for primer and topcoat were provided by Deft Coatings and FRC-E and the estimate for pretreatment was provided by Chemetall and FRC-E.

Table 7-1 lists items that were tracked for the cost analysis and their relative estimated costs and is followed by a detailed description of the assessment. Overall, the implementation of the new coatings system at FRC-E would result in a savings of approximately $6400 for the B-210 GT model carts when compared to the currently used coatings system. Over a period of 20 years, implementation of the new coatings system could result in a cost savings of upwards of $1.48M.

Table 7-1: Demonstration Items Tracked for Life Cycle Cost Analysis

Item Tracked	Cost for Current Coatings System (Estimated)	Cost for New Coatings System (Estimated)
Pretreatment Cost	N/A	$0.51/quart sprayed solution
Primer Cost	$54.83/gallon	$193.60/gallon
Topcoat Cost	$305.00/gallon	$132.00/gallon
Labor for Coating GSE Cart	$110/hr	$110/hr*
Cost for Cart Rework	$1212	$1180
Total Cost for FRC-E Carts (Qty: 200)	$242,400	$236,000
Number of Reworks per 20 years for Total Carts	10 – 20	4
Total Cost for FRC-E Carts over 20 years for Total Carts	$2,424,000 - $4,848,000	$944,000

* To apply the Gardobond AP 9809, there is an additional cost of $55.00 added to the total labor cost to account for the extra 15-30 minutes needed for application.

According to FRC-E, the work time required preparing and painting GSE is approximately 4 – 12 man hours depending on the specific GSE. This includes cleaning, abrasive blasting, solvent wiping, and painting. When totaled, the work-hours add up to an approximate cost of $440.00 - $1320.00 per GSE. The total paint used is estimated to be 1 - 2 gallons of MIL-DTL-0053022 primer at cost of $54.83/gallon and 1 - 2 gallons of MIL-PRF-85285, Type II topcoat at a cost of $305.00/gallon resulting in a total cost of paint of $359.83 - $719.66 per GSE. The total cost for repainting a GSE is calculated at $799.83 – $2039.66 depending upon the specific GSE surface area.

Because the GSE were coated with the new materials during demonstration and these new materials were applied with the present equipment, the startup costs were negligible. The ZVOC topcoat is less expensive at $132.00 per gallon than the currently used MIL-PRF-85285 topcoat at $305.00 per gallon. The Deft 02GN084 non-chrome primer costs $193.60/gallon. The total cost to repaint a GSE using the Deft 02GN084 and ZVOC coating system is $1091.20 - $1971.20. Although this cost is higher than the currently used primer cost of $54.83, by saving on labor costs per GSE component due to reduced paint touch-up and/or corrosion remediation, an overall positive return on investment is realized.

The preparation steps and associated costs, such as labor, remained as stated above to implement the Gardobond AP 9809. The Gardobond AP 9809 pretreatment costs $379.12 per 5-gallon pail of concentrate. The solution is diluted at 2% by volume, and makes 1000 quarts of sprayable solution. At a 75% efficiency, 750 quarts as sprayed would result in a cost of approximately $0.51/quart. At a usage of 4-10 gallons of 2% solution per GSE, this equates to being able to pretreat 18 – 46 GSE per 5-gallon container of concentrate solution. The total cost for pretreatment used on a GSE is calculated to be $8.24 - $21.10. The total cost for pretreatment of the GSE, including the $55 for labor is $63.24 - $76.10. FRC-E considered this rate cost effective.

The current coating system has shown obvious deficiencies. GSE are scheduled for repaint every 5 years; however, FRC-E indicates they are repainted every 1 – 2 years due to coating failures because of current adhesion issues that occur from the use of a direct-to-metal paint process. Based on field testing results, it is anticipated that the new coating system would enable the GSE to surpass the current 1-2 year timeline. A more accurate estimate with regards to coating life cycle extension will not be available until the field tested carts are deemed necessary for repaint thus establishing the new repaint cycle. It appears that the non-chromate pretreatment included in the new coating system is the improving factor. At this time, the benefit from the use of a ZVOC topcoat appears to be from an environmental standpoint and not from a performance position.

7.2 Cost Analysis and Comparison

In performing a life cycle cost estimate, a time period of 20-years was selected for use as a generic life cycle timeframe. As stated in previous sections of this report, facility capital costs are not applicable. Start-up and operations and maintenance costs remain unchanged with an implementation of the ZVOC coating system. The cost for equipment replacement will not be

impacted by the incorporation of the ZVOC coating system. The replacement of the current coating system with the demonstrated ZVOC coating system yields a cost savings for re-processing/re-application. The following paragraph provides a breakdown of this cost savings.

Cost of currently used coating system is calculated at $799.83 - $2,039.66 per GSE. As previously stated, FRC-E estimates GSE are currently reworked at least once per year. This calculates to a rework cost of $15,996.60 - $40,793.20 per GSE over a 20-year time period. The cost of the demonstrated ZVOC coating system is calculated at $1,154.44 - $2,047.30 per GSE. Based upon the transportation cart and F402 stand demonstration results, FRC-E anticipates that GSE utilizing the demonstrated ZVOC coating system will be re-worked at the most once every 2 years. This calculates to a rework cost of $11,544.40 - $20,473.00 per GSE over a 20-year time period. By implementing the demonstrated ZVOC coating system, FRC-E would save $4,452.20 - $20,320.20 per GSE over a 20-year time period.

8.0 IMPLEMENTATION ISSUES

The ZVOC topcoat and non-chromate primer have been incorporated into the NA 17-1-125 manual. The NA 17-1-125 manual includes the materials and procedures authorized for use in the cleaning, preservation, and corrosion control of Navy/Marine Corps support equipment. The presence of the callout of the ZVOC topcoat and non-chromate primer in the NA 17-1-125 manual allows users to implement both products should restrictions be placed on other products such as higher VOC topcoats.

Although, the ZVOC topcoat and non-chrome primer performed comparably in the field and are viable options for GSE coatings, FRC-E has decided to not implement. The learning curve associated with successful application of the ZVOC topcoat discouraged FRC-E to pursue implementation. The standard operating procedure in the GSE paint shop is one heavy cross-coat application to achieve sufficient coverage over parts. The ZVOC topcoat requires more passes to achieve the same amount of coverage as the currently used topcoat. At this time, there is no desire to switch to ZVOC until environmental regulations require FRC-E to do so.

FRC-E has accepted the technologies that were demonstrated and has proposed implementation of Gardobond AP 9809 conversion coating for use on GSE. The implementation of Gardobond AP 9809 will change the GSE standard process at FRC-E. As previously mentioned, the current coating process includes abrasive blast with a primer and topcoat. This will be the first time that a pretreatment will be added to the standard process. Adding Gardobond AP 9809 will change the overall cost of the process by a minimal amount; however, the increase in corrosion protection offered by the pretreatment outweighs the cost of the product implementation. The increase in GSE life cycle and decrease in down-time due to repair work far outweigh the costs associated with adding a pretreatment step to the process.

The NAVAIR implementation process for inclusion of the pretreatment into the NA 17-1-125 is as follows:

- Delivery of the data package to the decision authority (NAWCAD Lakehurst (LKE))
- Receipt of an approval letter from NAWCAD LKE
- Revision of the local directives and the NA 17-1-125 manual

Communication with the decision authority yielded full endorsement of the proposed implementation of the Gardobond AP 9809 at FRC-E for GSE. NAWCAD PAX and FRC-E are currently working on delivering the required data package and acquiring an approval letter.

9.0 REFERENCES

1. *Advanced Pretreatments: It's Time To Get f The Fence*, Gary Nelson, Chemetall, Metal Finishing, April 2010.

2. CorrDefense, *DoD Updates Report on Cost of Corrosion for Army Aviation and Missile Systems* E. Herzberg, Fall 2010.

3. EPA ID # 2060-AM84.

4. MIL-PRF-23377: *Primer Coatings: Epoxy, High-Solids*, U.S. Department of Defense, Washington DC, April 2007.

5. Retrieved from Cornell Law website, 40 CRF 63.745, Subpart GG: *National emission standards for aerospace manufacturing and rework facilities*, *primer and topcoat application operations*, Legal Information Institute, November 6, 2013, www.lawcornell.edu/cfr/text/40/63.845

6. Memorandum for Secretaries of the Military Departments, *Minimizing the Use of Hexavalent Chromium (Cr6+),* J. J. Young, 09 April 2009.

7. MIL-PRF-85285D: *Coating: Polyurethane, Aircraft and Support Equipment*, U.S. Department of Defense, Washington DC, February 2009.

8. ESTCP Final Report, *Demonstration/Validation of a Zero-VOC Waterborne Polyurethane Topcoat*, Kevin Kovaleski, 4 February 2002.

9. SERDP PP-65, *Finishing Systems for Naval Aircraft Applications: Current Schemes and Future Trends*; Kevin Kovaleski, Michael Kane, April 2000.

10. MIL-DTL-81706B: *Chemical Conversion Materials for Coating Aluminum and Aluminum Alloys,* U.S. Department of Defense, February 2002.

11. ESTCP Final Report, *Non-Chromate, ZVOC Coatings for Steel Substrates on Army and Navy Aircraft and Ground Vehicles: Demonstration of Non-Chromate Primer, ZVOC Topcoat for Ground Support Equipment*, Luwam Hagos; Amy Fowler, NAVAIR, 30 November 2013

12. Personal Correspondence, Gary Nelson, Product Manager, Surface Treatment, Chemetall. New Providence, NJ, US, 06 November 2013.

13. ESTCP Final Report, *Non-Chromate, ZVOC Coatings for Steel Substrates on Army and Navy Aircraft and Ground Vehicles: Demonstration of Steel Conversion Coatings on High Hard Armor Steel*, Jack Kelley, Army Research Laboratory, 30 September 2013.

14. Cherry Point Materials Engineering Analysis Report #467416MER6, *Application of a Gardobond (Oxsilan) 9809 Pretreatment, MIL-ORF-23377 Type I, Class N Primer, and MIL-PRF-85285 Type III, Zero-VOC (ZVOC) Topcoat to steel Ground Support Equipment,* Jacob Waller, FRC-East.

15. NAVAIR Materials Engineering Analysis Report, #281343MER6, *Alternative Coating Systems for Application on Steel Ground Support Equipment (GSE)*, Jacob Waller and Fred Lancaster, 2009

16. ESTCP, *Joint Test Protocol: Validation of Zero-VOC Topcoat for Ground Support Equipment,* NAVAIR and ARL, December 2010.

17. SSPC-VIS 2, *Standard Method of Evaluating Degree of Rusting on Painted Steel Surfaces*.

18. NAVAIR 17-1-125: *Support Equipment Cleaning, Preservation and Corrosion Control*.

Appendix: Points of Contact

POINT OF CONTACT Name	ORGANIZATION Name Address	Phone Fax E-mail	Role in Project
Luwam Hagos	NAVAIR, Code 4.3.4.2 48066 Shaw Road, Bldg. 2188 Patuxent River, MD 20670	PH: 301-342-8159 FX: 301-342-8062 luwam.hagos@navy.mil	NAVAIR Lead
Amy Fowler	NAVAIR, Code 4.3.4.2 48066 Shaw Road, Bldg. 2188 Patuxent River, MD 20670	PH:301-342-0986 FX:301-342-7566 amy.fowler1@navy.mil	NAVAIR Co-Lead
Jack Kelley	US Army Research Laboratory B4600 Deer Creek Loop Aberdeen Proving Ground, MD	PH: 410-306-0837 FX: 410-306-0829 BB: 240-429-8485 jkelley@arl.army.mil	Project Lead
Tom Braswell	US Army Research Laboratory B4600 Deer Creek Loop Aberdeen Proving Ground, MD	PH: 410-306-0935 FX: 410-306-0829 thomas.e.braswell@arl.army.mil	Testing and Specifications
Tom Considine	US Army Research Laboratory B4600 Deer Creek Loop Aberdeen Proving Ground, MD	PH: 410-306-2564 FX: 410-306-0961 Thomas.a.considine.ctr@mail.mil	ARL co-performer
Jacob Waller	NAVAIR – FRC-E ISSC East Code 434 Bldg 4032 PSC BOX 8021 Cherry Point, NC 28533-0021	PH: 252-464-9757 jacob.waller@navy.mil	Cherry Point Demonstration Coordinator
David Piatkowski	NAVAIR – 4.3.4 Hwy 547, Bldg 562 Lakehurst, NJ 08733	PH: 732-323-2716 david.piatkowski@navy.mil	NAVAIR GSE Signature Authority
Sean Loftus	NAVAIR – 4.3.4.2 Hwy 547, Bldg 562 Lakehurst, NJ 08733	PH: 732-323-1892 sean.loftus@navy.mil	NAVAIR GSE Authorization POC

ESTCP Office
4800 Mark Center Drive
Suite 17D08
Alexandria, VA 22350-3605

(571) 372-6565 (Phone)

E-mail: estcp@estcp.org
www.serdp-estcp.org