FINAL REPORT

Cost-Effective, Ultra-Sensitive Groundwater Monitoring for Site Remediation and Management

ESTCP Project ER-201122

AUGUST 2015

Rolf U. Halden
Isaac B. Roll
Arizona State University

Distribution Statement A

This document has been cleared for public release

This report was prepared under contract to the Department of Defense Strategic Environmental Research and Development Program (SERDP). The publication of this report does not indicate endorsement by the Department of Defense, nor should the contents be construed as reflecting the official policy or position of the Department of Defense. Reference herein to any specific commercial product, process, or service by trade name, trademark, manufacturer, or otherwise, does not necessarily constitute or imply its endorsement, recommendation, or favoring by the Department of Defense.

REPORT DOCUMENTATION PAGE

Form Approved

OMB No. 0704-0188

Public reporting burden for this collection of information is estimated to average 1 hour per response, including the time for reviewing instructions, searching existing data sources, gathering and maintaining the data needed, and completing and reviewing this collection of information. Send comments regarding this burden estimate or any other aspect of this collection of information, including suggestions for reducing this burden to Department of Defense, Washington Headquarters Services, Directorate for Information Operations and Reports (0704-0188), 1215 Jefferson Davis Highway, Suite 1204, Arlington, VA 22202-4302. Respondents should be aware that notwithstanding any other provision of law, no person shall be subject to any penalty for failing to comply with a collection of information if it does not display a currently valid OMB control number. **PLEASE DO NOT RETURN YOUR FORM TO THE ABOVE ADDRESS.**

1. REPORT DATE *(DD-MM-YYYY)*	**2. REPORT TYPE** Final Report	**3. DATES COVERED *(From - To)*** Apr. 2011 – Dec. 2014
4. TITLE AND SUBTITLE Final Report Cost-Effective, Ultra Sensitive Groundwater Monitoring for Site Remediation and Management		**5a. CONTRACT NUMBER**
		5b. GRANT NUMBER
		5c. PROGRAM ELEMENT NUMBER
6. AUTHOR(S) Halden. R.U.. Roll. I.B.		**5d. PROJECT NUMBER** ER-201122
		5e. TASK NUMBER
		5f. WORK UNIT NUMBER
7. PERFORMING ORGANIZATION NAME(S) AND ADDRESS(ES) The Biodesign Institute Center for Environmental Security Arizona State University 781 E. Terrace Road Tempe, AZ 85287-5904		**8. PERFORMING ORGANIZATION REPORT NUMBER**
9. SPONSORING / MONITORING AGENCY NAME(S) AND ADDRESS(ES) Environmental Security Technology Certification Program, Program Office 901 N. Stuart Street, Suite 303 Arlington, VA 22203		**10. SPONSOR/MONITOR'S ACRONYM(S)** ESTCP
		11. SPONSOR/MONITOR'S REPORT NUMBER(S)
12. DISTRIBUTION / AVAILABILITY STATEMENT Approved for public release; distribution is unlimited		
13. SUPPLEMENTARY NOTES		
14. ABSTRACT		
15. SUBJECT TERMS		

16. SECURITY CLASSIFICATION OF:			**17. LIMITATION OF ABSTRACT**	**18. NUMBER OF PAGES**	**19a. NAME OF RESPONSIBLE PERSON** Rolf U. Halden
a. REPORT	**b. ABSTRACT**	**c. THIS PAGE**			**19b. TELEPHONE NUMBER *(include area code)*** 480-727-0893

Standard Form 298 (Rev. 8-98)

Prescribed by ANSI Std. Z39.18

TABLE OF CONTENTS

LIST OF ACRONYMS **5**

LIST OF FIGURES **7**

LIST OF TABLES **9**

ACKNOWLEDGEMENTS **10**

EXECUTIVE SUMMARY **11**

1.0 INTRODUCTION **13**

1.1 BACKGROUND 13
1.2 OBJECTIVE OF THE DEMONSTRATION 16
1.3 REGULATORY DRIVERS 16

2.0 TECHNOLOGY **17**

2.1 TECHNOLOGY DESCRIPTION 17
2.2 TECHNOLOGY DEVELOPMENT 21
2.3 ADVANTAGES AND LIMITATIONS OF THE TECHNOLOGY 26

3.0 PERFORMANCE OBJECTIVES **27**

3.1 DEMONSTRATE AGREEMENT WITH CURRENT METHODS 28
3.2 DEMONSTRATE TIME-AVERAGED SAMPLING CAPABILITY 29
3.3 DEMONSTRATE OPERABILITY UNDER ENVIRONMENTAL CONDITIONS 29
3.4 DEMONSTRATE FAVORABLE LABOR REQUIREMENTS 30
3.5 DEMONSTRATE UTILITY OF IS2's LOW MDLs 30
3.6 DEMONSTRATE REDUCED GENERATION OF HAZARDOUS WASTE 31
3.7 DEMONSTRATE FAVORABLE COST ECONOMICS 31

4.0 SITE DESCRIPTION **33**

4.1 SITE SELECTION CRITERIA 33
4.2 FORMER WILLIAMS AIR FORCE BASE, MESA, AZ 35
4.3 NAVAL AIR STATION NORTH ISLAND, CORONADO, CA 38

5.0 TEST DESIGN **42**

5.1 CONCEPTUAL EXPERIMENTAL DESIGN 42
5.2 BASELINE CHARACTERIZATION ACTIVITIES 43
5.3 TREATABILITY OR LABORATORY STUDY RESULTS 43
5.4 DESIGN AND LAYOUT OF TECHNOLOGY COMPONENTS 51
5.5 STANDARD PROCEDURES 59
5.6 FIRST DEMONSTRATION: FORMER WILLIAMS AFB 62

5.7 SECOND DEMONSTRATION: NAS NORTH ISLAND 69

6.0 PERFORMANCE ASSESSMENT 75

6.1 DEMONSTRATE AGREEMENT WITH CURRENT METHODS 75
6.2 DEMONSTRATE TIME-AVERAGED SAMPLING CAPABILITY 76
6.3 DEMONSTRATE OPERABILITY UNDER ENVIRONMENTAL CONDITIONS .. 78
6.4 DEMONSTRATE FAVORABLE LABOR REQUIREMENTS 80
6.5 DEMONSTRATE UTILITY OF IS2's LOW MDLs 81
6.6 DEMONSTRATE REDUCED GENERATION OF HAZARDOUS WASTE 82
6.7 DEMONSTRATE FAVORABLE COST ECONOMICS 83

7.0 COST ASSESSMENT 85

7.1 COST MODEL 85
7.2 COST COMPETITIVENESS 87

8.0 IMPLEMENTATION ISSUES 90

9.0 REFERENCES 91

Appendix A: Points of Contact 93

Appendix B: US 2011/0003400 A1, "Methods and systems for ground and surface water sampling and analysis" 94

Appendix C: US 2013/0040290 A1, "Methods and systems for ultra-trace analysis of liquids" 110

Appendix D: US 2014/0102182 A1, "Devices and methods for determination of bioavailability of pollutants" 134

Appendix E: SPE and IC Methods for Perchlorate 163

E.1 SPE Method 163
E.2 IC Method 163
E.3 Supporting Data 164

Appendix F: SPE and GC-MS Methods for Fuel Components 165

F.1 SPE Method 165
F.2 GC-MS Method 166

Appendix G: SPE and Quantification Methods for Chromate 167

G.1 SPE Method 167
G.2 Colorimetric Method for Chromate 167
G.3 Total Chrome by ICP-AES 167

Appendix H: SPE and Quantification Method for Suite of Endocrine Disruptors 169

H.1 SPE Method 169
H.2 LC-MS/MS Method 169

Appendix I: SPE and LC-MS/MS Methods for *N*-Nitrosamines 172

I.1 Compound Table 172
I.2 SPE Method 172
I.3 LC-MS/MS Method 173

LIST OF ACRONYMS

AC	Alternating Current
AFB	Air Force Base
AFCEC	Air Force Civil Engineer Center
AFCEE	Air Force Center for Engineering and the Environment
AMSL	Above Mean Sea Level
ASTM	American Society for Testing and Materials
ASU	Arizona State University
AZ	Arizona
bgs	Below Ground Surface
BRAC	Base Realignment and Closure
BTEX	Benzene, Toluene, Ethylbenzene, and Xylenes
CA	California
CAD	Computer-Aided Design
CES	Center for Environmental Security
cm	Centimeter
COTS	Commercial Off-The-Shelf
DC	Direct Current
DE	Deutschland (Germany)
DO	Dissolved Oxygen
DTW	Depth to Water
ER	Environmental Restoration
ESTCP	Environmental Security Technology Certification Program
ft	Feet
HDPE	High Density Polyethylene
GC	Gas Chromatography
IC	Ion Chromatography
ICP-AES	Inductively Coupled Plasma-Atomic Emission Spectrometry
IS2	*In Situ* Sampler
ISMA	*In Situ* Microcosm Array
JP	Jet Propellant
K_{OW}	Octanol-Water Partition Coefficient
LF	Landfill
LLC	Limited Liability Corporation
LLNL	Lawrence Livermore National Laboratory
LNAPL	Light Non-Aqueous Phase Liquid
MDL	Method Detection Limit
µg	Microgram
µl	Microliter
µm	Micrometer
ml	Milliliter
MS	Mass Spectrometry
MW	Molecular Weight
MΩ	Mega-ohm
NAS	Naval Air Station

NASNI	Naval Air Station North Island
NAVFAC	Naval Facilities Engineering Command
NOAA	National Oceanic and Atmospheric Administration
nm	Nanometer
OD	Outer Diameter
OU	Operable Unit
PAH	Polycyclic aromatic hydrocarbon
PDB	Polyethylene Diffusion Bag
PDMS	Polydimethylsiloxane
PPE	Personal Protective Equipment
PTFE	Polytetrafluoroethylene (Teflon)
QA/QC	Quality Assurance/Quality Control
RL	Reporting Limit
SBSE	Stir Bar Sorptive Extraction
SDB	Styrene divinylbenzene
SOP	Standard Operating Procedure
SPE	Solid Phase Extraction
SSEBE	School for Sustainable Engineering and the Built Environment
ST	Storage Tanks
SVOC	Semivolatile Organic Compound
SWMU	Solid Waste Management Unit
TCE	Trichloroethene
UK	United Kingdom
USA	United States of America
USDOD	United States Department of Defense
USDOE	United States Department of Energy
USEPA	United States Environmental Protection Agency
UST	Underground Storage Tank
V	Volt
v/v	Volume Per Volume (Concentration)
VOA	Volatile Organic Analysis
VOC	Volatile Organic Compound

LIST OF FIGURES

Figure 1-1 Modeled results obtained from the same two sets of three discrete samples taken randomly from an environment where the contaminant concentration varies between randomly between 50 and 150% of the true average value 13
Figure 1-2 SPE equipment in the laboratory 14

Figure 2-1 Solid phase extraction (SPE) cartridge and polydimethylsiloxane-wrapped stir bar used with stir bar sorptive extraction (SBSE) 16
Figure 2-2 Field-prepared IS2 sampler with peristaltic pump 17
Figure 2-3 Modeled results for time-integrative data derived from the IS2 when the contaminant concentration changes with time 18
Figure 2-4 Schematic of a typical installation of the IS2 sampling technology. 19
Figure 2-5 Pressure chamber for submersible testing 21
Figure 2-6 Rendering of IS2 sampling unit with peristaltic pump 22
Figure 2-7 Rendering of IS2 sampling unit with reciprocating pump 23
Figure 2-8 Rendering of 1.5-Inch IS2 sampling unit. 24
Figure 2-9 1.5-Inch IS2 sampling unit as proposed and embodied 25

Figure 4-1 Former William AFB, Mesa, AZ 34
Figure 4-2 Site map of ST-12, showing concentrations for BTEX components in groundwater 36
Figure 4-3 Naval Air Station North Island, Coronado, CA 37
Figure 4-4 VOC and chromate plumes at NASNI OU-20. 39

Figure 5-1 Flow through C-18 SPE cartridges over approximately three weeks 42
Figure 5-2 Pressure observed upstream of C-18 cartridges over approximately three weeks. 42
Figure 5-3 Accumulation of surface water sediments upon the frit of an SPE cartridge 43
Figure 5-4 Comparison perchlorate concentration data quality observed during preliminary study using effluent capture or effluent discharge mode. 46
Figure 5-5 IS2 Sampler deployed in a monitoring well at the perchlorate site in 2012 47
Figure 5-6 IS2 surface package at an installation 48
Figure 5-7 Six-channel peristaltic pump developed for the IS2 sampler 49
Figure 5-8 IS2 sampler with peristaltic pump in its watertight shell 50
Figure 5-9 IS2 peristaltic pump control unit 51
Figure 5-10 Field-prepared IS2 surface package for peristaltic pump sampler 51
Figure 5-11 Six-channel reciprocating syringe pump developed for the IS2 sampler. 52
Figure 5-12 Field-prepared IS2 sampler with reciprocating syringe pump. 53
Figure 5-13 Screenshot of reciprocating pump control software 54
Figure 5-14 Field-prepared IS2 surface package for reciprocating syringe pump 54
Figure 5-15 Hanger used to secure the sampler in a well 55
Figure 5-16 Hanger, steel cable, electrical cable, and cable management pulley for deployment of the IS2 sampler 55
Figure 5-17 Installation and deinstallation of an IS2 sampler with a crane 56
Figure 5-18 Deployment of the IS2 sampler into W36 at the former Williams AFB, November 2013 61

Figure 5-19 Gas chromatograms for naphthalene recovered from quantification and breakthrough cartridges. 63
Figure 5-20 Concentrations and reporting limits of naphthalene reported in demonstration well using samples generated by a bladder pump, a bailer, and the IS2, and analysis by EPA methods 8260B, 8270C, and the ASU GC-MS method. 64
Figure 5-21 Concentrations of ethylbenzene reported in demonstration well using samples generated by a bladder pump, a bailer, and the IS2, and analysis by EPA methods 8260B and the ASU GC-MS method. 64
Figure 5-22 Tide, depth to water, and contaminant concentration data for well S1-MW-09 over a 24-hour time period. 67
Figure 5-23 Field assembly and installation of the IS2 at NASNI. 68
Figure 5-24 Predicted and observed volumes of water processed by the IS2 sampler during the demonstration at NASNI. 69
Figure 5-25 Speciation chromium observed in the liquid bypass channels. 70
Figure 5-26 Concentrations of chromium reported by 7 and 14-day liquid composite sample and a 28-day sorbed composite sample. 70

LIST OF TABLES

Table 3-1 Quantitative performance objectives. 26
Table 3-2 Qualitative performance objectives. 27

Table 4-1 Site selection criteria for the demonstration locations.....33
Table 4-2 Geological formations underlying the former Williams AFB 35

Table 5-1 Example anion concentrations in groundwater used for feasibility studies.....42
Table 5-2 Compounds screened in the laboratory for IS2 sampling.....44
Table 5-3 Mass balance data for feasibility experiments with perchlorate.....45
Table 5-4 Construction details for candidate wells at Former Williams AFB.....59
Table 5-5 Analytes of interest for IS2 demonstration at the former Williams AFB.....60
Table 5-6 Sampling Matrix for IS2 demonstration at the former Williams AFB.....60
Table 5-7 Fluid volume dispensed by the IS2 peristaltic pump.....62
Table 5-8 Reporting limits for discrete and composite sampling of naphthalene.....65
Table 5-9 Sampling depths and depth of screen at demonstration well.....65
Table 5-10 Construction details for candidate wells at NASNI.....66
Table 5-11 Concentrations of analytes relevant to the IS2 demonstration at NASNI. 67
Table 5-12 Reporting limits for discrete and composite sampling of chromium-VI 71

Table 6-1 Summary of contaminant quantification data for two demonstrations.....72
Table 6-2 Samples and concentration values use for statistical comparison of liquid and solid composite sampling results 74
Table 6-3 Results of F-Test for the equality of variances of liquid and solid composite sample results.....74
Table 6-4 Results of *t*-Test for the equality of means of liquid and solid composite results. 74
Table 6-5 Results of *t*-Test for the equality of means of liquid and solid composite results. 76
Table 6-6 Sampling methods and reporting limits from two demonstrations of the IS2 78
Table 6-7 Cost elements for groundwater sampling and qualitative analysis of the relative cost of the IS2 method. 79

Table 7.1 Capital Investment Cost Model for ER-201122 82
Table 7.2 Operating Costs Model for ER-201122 82
Table 7.3 Comparison of capital costs associated with several sampling instruments.....83
Table 7.4 Cost data for first demonstration at former Williams AFB 84
Table 7.5 Cost data for second demonstration at NAS North Island.....85

ACKNOWLEDGEMENTS

The project team takes this opportunity to gratefully acknowledge the assistance and support of many individuals and organizations who have made this project a success.

From Arizona State University, we would like to thank our colleagues in the Center for Environmental Security, including Dr. Benny Pycke, PhD students Samuel Supowit, Erin Driver, Alizee Jenck, and Maurissa Charles, and lab managers Sara Murch and Zach Smith. We also gratefully acknowledge the assistance of our colleagues in the School for Sustainable Engineering and the Built Environment (SSEBE), students Allie Bowen and Dylan Lesan, and Dr. Paul Westerhoff.

Our proposal and early work was supported by our collegues at Lawrence Livermore National Laboratory (LLNL), Vic Madrid and Walt McNab.

Our demonstration at the Former Williams Air Force Base would not have been possible without the assistance of the Air Force Civil Engineer Center (AFCEC) and AMEC Environment and Infrastructure, Inc., specifically Don Smallbeck, Emily Corkery, Chris Courtney, and Aurelie Lecluse.

And finally, our demonstration at Naval Air Station North Island was made possible with the assistance of Michael Pound and Bernard Jenkins at Naval Facilities Engineering Command (NAVFAC) Southwest.

EXECUTIVE SUMMARY

This report summarizes the development and demonstration of a new tool for monitoring contamination in ground and surface waters, the *In Situ* Sampler (IS2). It provides an account of the theory, the engineering design process, and the first field data generated with this tool and method. This report can serve users and stakeholders as a preliminary guidance document for decision making with respect to feasibility for future studies and field implementation.

Purpose. Between 2004 and 2033, an estimated $200 billion will be spent on environmental restoration, of which 10-16% is estimated to be spent on site characterization. New methods and instruments that reduce costs, improve data quality or provide complementary data at a reasonable cost, can be expected to have a significant impact on the direction of environmental restoration projects.

Technology Description. The IS2 is a method and instrument for solid-phase extraction *in situ*. The IS2 sampler is inserted to a desired depth in a monitoring well, where it meters 10s to 1000s of mL of groundwater to a sorbent cartridge over a time-scale from hours to weeks. Unlike many passive technologies, the IS2 does not require calibration—concentration data is derived directly from the mass of analyte recovered from the sorbent cartridge and the known volume of water processed. This preconcentration step provides significant magnification of analyte concentration, improving reporting limits. The samples returned by the IS2 weigh only a few grams but may represent chemical constituents of kilograms of water, making handling and shipment of large numbers of samples significantly more cost effective. The automation made possible by the IS2 reduces sample handling by technicians, with the potential to improve reproducibility and limiting opportunities for contamination of samples in the laboratory due to in situ extraction of analytes in the borehole.

Demonstration Results. The IS2 was demonstrated at two sites: the Former Williams Air Force Base (AFB) in Mesa, Arizona, and Naval Air Station North Island (NASNI). At the Former Williams AFB, the device was inserted to a depth of 200 ft and generated 24-hour composite samples from µg/L quantities of fuel components including naphthalene. At NASNI, the sampler was deployed to generate 28-day composite samples in a shallow well with hexavalent chromium contamination that was demonstrated to be driven by tidal influence. In both cases the sorbents used were commercially available and the analysis methods typical for the analytes. The IS2 system has been demonstrated to provide data comparable to liquid samples, while also providing short or long time-integrated data and analyte preconcentration.

Cost Analysis. This report includes a cost-analysis of the IS2 demonstrations and a discussion of these costs and those of other contemporary sampling instruments. The IS2 capital and operating costs are similar to other current methods, while providing a new and complementary way to generate concentration data.

Summary. A new water sampling method and device have been developed that bring solid-phase extraction to the field. The IS2 generates preconcentrated samples, provides time-integrated data, and reduces sample size and handling. At the research stage, the IS2 is similar in

price to other practices and can be expected to improve in cost-effectiveness if brought to market.

1.0 INTRODUCTION

The purpose of this project was to develop and validate a novel method for integrated groundwater sampling and sample processing, the *In Situ* Sampling (IS2) Technology. The IS2 technology provides the capabilities of contemporary laboratory bench techniques for liquid sample processing, including cleanup and concentration, in a package that is inserted directly into a contaminated, saturated geological formation by way of a monitoring well. The primary benefits of this technology include:

- Generation of time-integrated average concentration data, providing the best estimate of contaminant mass flux through a groundwater system.
- Cost benefits realized by greatly reducing the volume of groundwater shipped from sites to laboratories, enhancing the stability of samples for transport, and improving the sensitivity of the monitoring regimen.

Secondary benefits include the reduction of human handling steps in sample collection and processing, with the improvements in reproducibility that are typically associated with automation. This system is intended to be deployed without well purging where indicated by site hydrogeology, reducing hazardous waste generation.

1.1 BACKGROUND

The United States Environmental Protection Agency (USEPA) estimates that between 2004 and 2033, more than $200 billion will be spent on environmental remediation, 10-16% of which will be spent on site characterization, including groundwater monitoring (USEPA, 2004). Included in that estimate is the USDOD's own estimate that it will spend $33 billion for environmental remediation from 2003 forward, not including the costs of some sites where work was already taking place. A review of the cost information for the groundwater remediation program at the United States Department of Energy (USDOE) Hanford Site agrees with the site characterization estimate, suggesting that performance monitoring (remediation system and groundwater monitoring) costs accounted for approximately 12% of the expenditures for that program in 2010, or more than 20% of the costs when capital investments are excluded (USDOE, 2011).

The cost of groundwater monitoring can therefore be expected to be a significant contribution to the overall cost of managing a contaminated site. Making any significant cost reductions is complicated by the distribution of costs between many contributing elements:

- Construction of monitoring wells
- Sampling and fieldwork labor
- Capital equipment (pumps and other reusable systems)
- Consumables (bailers, sample bottles, reagents and preservatives)
- Transportation and shipping
- Laboratory work
- Waste disposal

With more than forty years of development, the individual components of this process have been optimized to a degree, and several alternatives may be available for each element. Further improvements in the efficiency of the monitoring program–and its cost effectiveness for the site

manager–may be possible by exploiting synergy between these components. IS2 is an example of a novel technology that takes this approach, by moving a component of the analytical process (cleanup and concentration) into the field.

While *in situ* analysis of many contaminants has been investigated (Carron, Peitersen, & Lewis, 1992; Li, Zhai, Li, & Long, 2014), the typical path for characterizing environmental chemistry is to couple a sampling method in the field with an analytical method in the laboratory. Most groundwater sampling procedures move a significant volume of water (10s to 1000s of ml) from the well-bore to the laboratory. Significant care must be taken to preserve the viability of these samples, and a great deal of research has been performed to optimize the process of retrieving representative volumes of water (Britt, Parker, & Cherry, 2010; Parker & Britt, 2012; Pettyjohn, Dunlap, Cosby, & Keeley, 1981). This includes several notable improvements in devices which take grab-samples, diffusion-based samplers (Verreydt, Bronders, & Van Keer, 2014), and an ongoing debate over the efficacy of purging the monitoring well before sampling (Barcelona, Varljen, Puls, & Kaminski, 2005).

In addition to the difficulty of acquiring and protecting volumes of water, most liquid sampling methods take time-discrete samples. While there are conditions where this will not affect data quality, groundwater is a dynamic environment, subject to many stresses including tidal influence, pumping, seasonal or engineered recharge, changing biological conditions and other factors that may cause contaminant concentrations to change on a time-scale that undermines data provided by discrete measurements. In a modeled system with changing contaminant concentrations, the choice of two random sets of discrete data can easily provide average observed values more than one standard deviation apart (Figure 1-1).

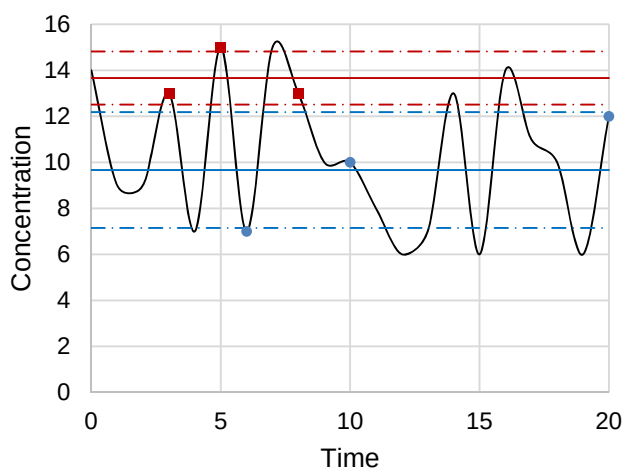

Figure 1-1. Modeled averages (solid lines) and standard deviations (dashed lines) obtained from two sets of three discrete samples (red and blue) taken randomly from an environment where the contaminant concentration (black) varies between randomly between 50 and 150% of the average.

Contaminant mass flux in a plume is one of the most important site characterization activities that groundwater monitoring supports (Einarson & Mackay, 2001; ITRC, 2010; Stroo et al., 2012); with difference between the two averages being more than 40%, this error would significantly affect mass flux calculations based on the two datasets. The number of discrete measurements needed to characterize such an environment is prohibitively high, making the utility of time-averaging methods very attractive. This type of time-dependent concentration fluctuation is not hypothetical, has been documented in the field by the authors, and is presented in Section 5.7 of this report.

The approach of this project is to automate a standard laboratory method (solid phase extraction, SPE) in a package that can be deployed in typical groundwater monitoring wells. SPE enables the extraction of trace contaminants from large volumes of water, providing both cleanup and preconcentration of analytes before quantification. This is a popular and mature technology, with a variety of vendors providing high-quality consumables (Hennion, 1999) and equipment for process automation (Figure 1-2). By controlling the volume and flow rate of water through the collection system, and collecting the entire contaminant mass, the IS2 provides a true average concentration of the contamination in the environment to which it is exposed.

Figure 1-2. SPE equipment in the laboratory. Clockwise from upper left: Vacuum manifold (Thermo Fisher Scientific, Waltham, Massachusetts), automated large-volume SPE extraction instrument (Dionex, Bannockburn, Illinois), and integrated SPE sample preparation on a gas chromatograph-mass spectrometer (GC-MS; Gerstel GmbH & Co.KG, Mülheim an der Ruhr, Germany).

By moving this process *in situ*, the investigators intend to avoid most of the challenges of maintaining the integrity of a liquid sample. Furthermore, this practice should yield many synergistic improvements in the efficiency of the entire process, namely:

- Reduced complexity of fieldwork, by generating dry solid-phase (sorbed) samples.
- Reduced consumption of consumables, by eliminating intermediary processes.
- Reduced shipping costs, by eliminating the weight of liquid samples.
- Reduced laboratory costs, by moving part of the analytical process out of the lab.

Additional gains in productivity should come from:

- Improved method detection limits, by pre-concentrating large (1000s of ml) samples.
- Improved reproducibility, by reducing lossy sampling steps and increasing automation.

Finally, the *in situ* sample preparation process is intended to be a no-purge method, processing water taken from the screened interval and returning it directly to the well-bore, and thus carrying with it the significantly lower waste production potential of such methods. While purging is a necessary step for some sampling methods (such as the use of bailers), studies suggest that it can be reasonably eliminated with a dedicated and properly designed sampler operating in the screened interval of the well, a principle which underlies polyethylene diffusion bag (PDB) sampling (Powell & Puls, 1993; Vroblesky & Hyde, 1997).

1.2 OBJECTIVE OF THE DEMONSTRATION

Field demonstration of the IS2 technology demonstrated (i) field preparation of samples by solid phase extraction (SPE) or stir-bar sorptive extraction (SBSE), (ii) reduction or elimination of liquid sample handling in the field, (iii) generation of time-integrated average concentration data, and (iv) agreement with the measurements made by a traditional site monitoring program. Additionally, field demonstration provided the opportunity for the collection of data on the material and labor requirements associated with this technology, enabling comparisons with contemporary methods.

Points of contact for the management, development, and demonstration of the IS2 technology are provided in Appendix A.

1.3 REGULATORY DRIVERS

Regulatory drivers for this technology include:

- USDOD Financial Management Regulation Volume 12, Chapter 2: Productivity Gain Sharing (USDOD, 2012)
- Executive Order 13,423, *Strengthening Federal Environmental, Energy, and Transportation Management*. ("Executive Order No. 13,423," 2011)
- Executive Order 13,514, *Federal Leadership in Environmental, Energy, and Economic Performance*. ("Executive Order No. 13,514," 2010)

2.0 TECHNOLOGY

The technology developed under ER-201122 consists of a novel down-hole device for generating concentrated, non-aqueous-phase samples, and sequence of processes from deployment of the sampler to analysis of the samples. The method and systems associated with the technology have been described in international patent applications published under numbers US 2011/0003400 A1 (WO 2009/105241), "Methods and systems for ground and surface water sampling and analysis" (Halden, 2009), US 2013/0040290 A1 (WO 2011/140270), "Methods and systems for ultra-trace analysis of liquids" (Halden, 2011), and US 2014/0102182 A1 (WO 2012/145299), "Devices and methods for determination of bioavailability of pollutants" (Halden & Roll, 2012). These applications are provided in Appendices B, C, and D, respectively.

The project team for ER-201122 has accumulated significant experience in the design and deployment of submersible systems for studying groundwater chemistry and biology, beginning with the development of the *In Situ* Microcosm Array (ISMA) under ER-200914 (Halden, McClellan, & Kalinowski, 2012), described in United States Patents US8323921, "Method and apparatus for environmental monitoring and bioprospecting" (Halden, 2012a), US7662618, "Using automated robotic device comprising capillary tubes to analyze and detect microorganism in soil; bioremediation" (Halden, 2010), and US8338182 and US8691582, "Methods and systems for fluid examination and remediation" (Halden, 2012b, 2014). This experience and existing design work was heavily leveraged in the development of the present technology.

2.1 TECHNOLOGY DESCRIPTION

2.1.1 Theory, Function, and Operation

SPE and SBSE (Figure 2-1) are mature technologies used to concentrate and clean up the analytes of interest in aqueous samples before analysis by standard analytical methods including chromatography (gas and liquid) and mass spectrometry. In SPE, water is passed through a bed of resin beads, typically incorporated into a disposable plastic syringe. These beads are manufactured from sorbent materials or from inert materials that have been functionalized to promote the sorption of analytes from the aqueous phase. Selection of the functional groups and the bed volume determine the specificity of the extraction and the capacity for analyte mass to be captured.

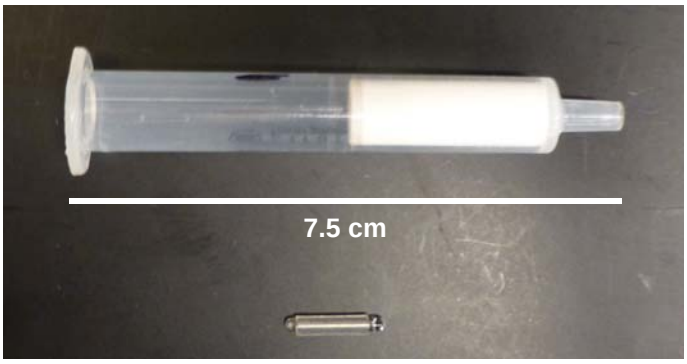

Figure 2-1. Solid phase extraction (SPE) cartridge (top) and polydimethylsiloxane-wrapped stir bar used with stir bar sorptive extraction (SBSE, bottom).
In SBSE, inert glass rods with magnetic cores are wrapped in a layer of polydimethylsiloxane (PDMS). Hydrophobic analytes of interest partition from the aqueous phase into the PDMS layer, with the partitioning typically well-predicted by the octanol-water partition coefficient (K_{OW}) of the analytes (Baltussen, Sandra, David, & Cramers, 1999). In practice, the sorbent capacities and affinities of SPE and SBSE sampling packages are selected such that they act as ideal sinks, capturing the entire contaminant mass to which they are exposed.

SPE and SBSE extractions can be automated to various extents, with benchtop instruments available in particular for performing large volume, parallel SPE extractions (Figure 1-2). The elution of analytes from the sorbed phase in either method may similarly be performed by hand or automated with high-throughput extraction instruments, using either solvents or thermal desorption.

The IS2 sampler (Figure 2-2) is an extension of these concepts, packaging the sample preparation pipeline in a package that can be operated in environment. The IS2 sampler includes a bank of sorbent cartridges and the hardware necessary to take in water from the environment, dispense this water into the cartridges at a prescribed rate, and dispose of the water when it leaves the cartridges. The instrument can be programmed to generate low-flow continuous, periodic composite, or high-flow time-discrete samples.

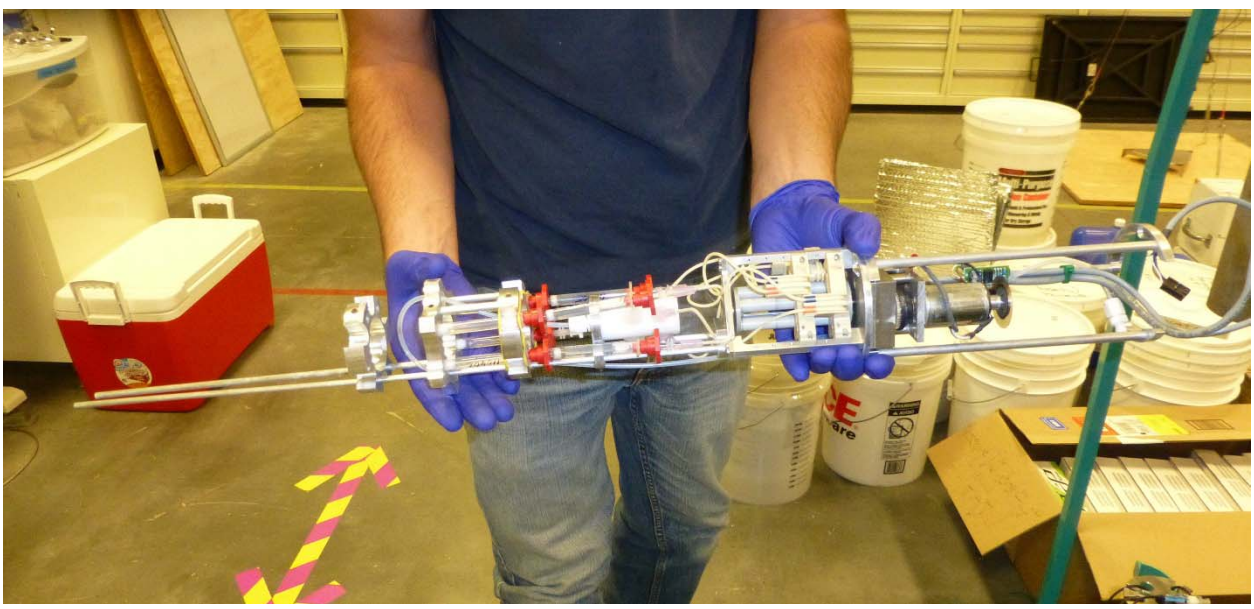

Figure 2-2. Field-prepared IS2 sampler with peristaltic pump. From right to left, the unit comprises a peristaltic pump and an array of cartridges for solid phase extraction.

The IS2 sampler is an example of an active, time-integrative sampler. Fundamental properties of the sampler include:

- Sorbent cartridges that have negligible desorption rates during sampling
- Collection rates governed by advective flow through the sampler

The rate of contaminant mass collection by the sampler proceeds according to Equation 2-1 (Vrana et al., 2005), where M_S is the contaminant mass captured on a cartridge, C_W is the concentration of the contaminant in the environmental water, R_S is the rate of advective flow through the cartridge, and t is the elapsed sampling time. After the samples are recovered and quantified, the environmental contaminant concentration can be determined according to Equation 2-2.

$$M_S = C_W R_S t \tag{2-1}$$

$$C_W = \frac{M_S}{R_S t} \tag{2-2}$$

This time-integrative approach provides concentration data and generates an average of the changing environmental concentration from the time sampling begins until it ends, yielding a significantly better estimate of the contaminant flux through the system when environmental concentrations are subject to temporal changes (Figure 2-3).

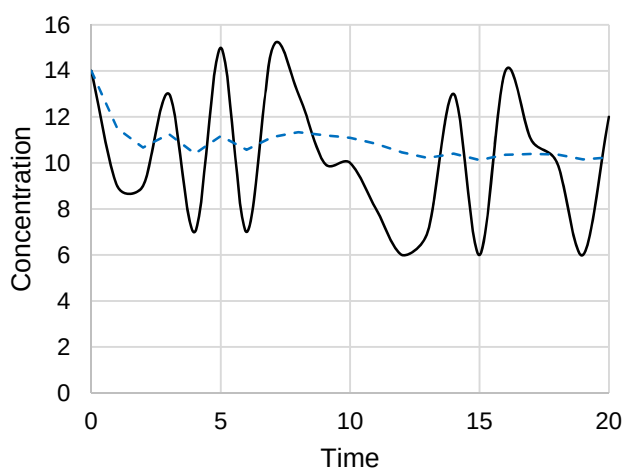

Figure 2-3. Modeled results for time-integrative data derived from the IS2 (dashed line) when the contaminant concentration (black) changes with time. This model uses the same input data as Figure 1-1.

In the present embodiment (Figure 2-4), the IS2 sampler is deployed in the screened interval of a groundwater monitoring well. While in operation, the sorbent cartridges scavenge and concentrate target analytes. The water is returned to the well-bore through a discharge line or captured in internal storage bags, depending on the hydrogeological properties the requirements of the site. Upon return of the sampler to the surface, the loaded SPE or SBSE cartridges are returned to the laboratory for elution and analysis.

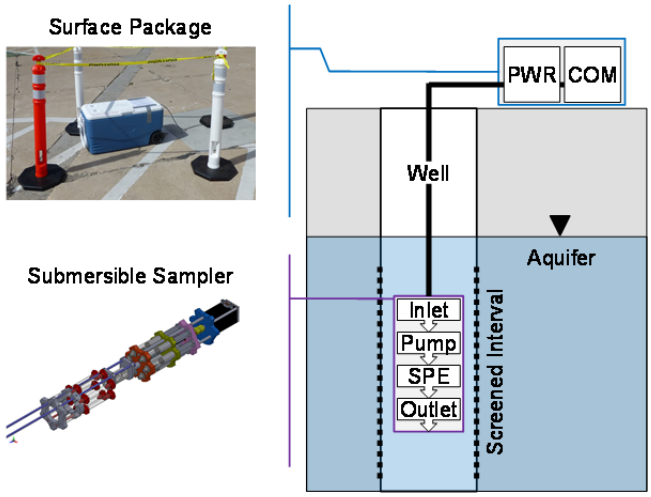

Figure 2-4. Schematic of a typical installation of the IS2 sampling technology. The device is suspended from the surface and lowered to the desired sampling depth within the screened interval of a monitoring well. Power and communication are provided from a surface package via a multichannel control cable. The submersible handles water collection, processing, and expulsion or collection.

A detailed mechanical description of the system is presented in Section 5.3, Design and Layout of Technology Components.

2.1.2 Summary of Development

May 2011	Project ER-201122 Commenced
July 2011	Peristaltic Sampling Unit for 4" Wells Designed
October 2011	Peristaltic Prototype Sampling Unit for 4" Wells Completed
	GC-MS/MS with Automated Sample Handling Installed
December 2011	Site Selection Memo Delivered
March 2012	Draft Universal Demonstration Plan Delivered
November 2013	First Demonstration at the Former Williams Air Force Base
April 2014	Reciprocating Sampling Unit for 4" Wells Designed
July 2014	Reciprocating Sampling Unit for 4" Wells Completed
November 2014	Second Demonstration at Naval Air Station North Island

2.1.3 Expected Applications

Applications of *in situ* sample processing include:

- Improving the cost efficiency of the workflow in normal site monitoring programs
- Improving limits of detection and quantification by concentrating large-volume samples
- Improving reproducibility of data by automating sample handling and providing parallel replicates
- Acting as a sentinel technology, providing earlier detection of migrating contaminants

2.2 TECHNOLOGY DEVELOPMENT

The IS2 sampler was initially developed by modifying a submersible designed for ESTCP ER-200914, the *In Situ* Microcosm Array (ISMA). The three principal instruments developed for this project: a custom pressure chamber for testing submersibles, a 3.5-inch submersible with a peristaltic pump, and a 3.5-inch submersible with a reciprocating pump. A 1.5-inch submersible with a peristaltic pump was also proposed and prototyped.

The IS2 apparatus consists of a submersible sampler, a power and control system that is connected via a waterproof cable, and the hardware used to secure the device in the deployment well. The sampler includes a pump, an array of solid phase extraction cartridges, and the liquid handling lines that enable the pump to load the cartridges with groundwater taken into the sampler from the environment.

This section gives a brief description of the development process for the equipment produced under this project. A detailed description of the final embodiments of the 3.5-inch submersibles is presented in Section 5.3, Design and Layout of Technology Components.

2.2.1 Development of Pressure Chamber for Submersible Testing

Previous experience with submersibles demonstrated the difficulty of diagnosing malfunctions in the field or with a limited number of field trials, so a pressure chamber (Figure 2-5) was designed and fabricated. Submersibles placed in the chamber are submerged to a depth of a few centimeters; the chamber is then charged with compressed air to simulate conditions at a user-selected depth. This pressure chamber is capable of simulating depths of up to 230 ft under water, which enables the development of submersibles for application in a variety of environments: surface waters, and wells in confined or unconfined aquifers. The chamber can accommodate submersibles up to 3.5 inches outer diameter and 48 inches long, and was used to validate the fittings for the IS2 sampler.

Figure 2-5. Pressure chamber for submersible testing. Clockwise from upper left: 1) pressure chamber installed in laboratory, 2) pressure regulator and gauge, 3) unit has wheels and handle for relocation, 4) an IS2 sampler shell with dummy fittings for pressure testing.

2.2.2 Development of 3.5-Inch Outer Diameter Peristaltic Sampling Unit

A 3.5-inch outer diameter (OD) peristaltic sampler (Figure 2-6) was developed by coupling a high-precision, 6-channel peristaltic pump, a caddy for SPE cartridges, and an array of polymer bags for effluent capture. The entire sampler is housed within a 3.5" OD stainless steel case. The sampler can be configured with the effluent capture bags (effluent capture mode) or without them (effluent discharge mode) depending on site specific characteristics the requirements of the sampling program. The form factor of the device was determined by the dimensions required for deployment in the 4-inch monitoring wells commonly installed in the United States.

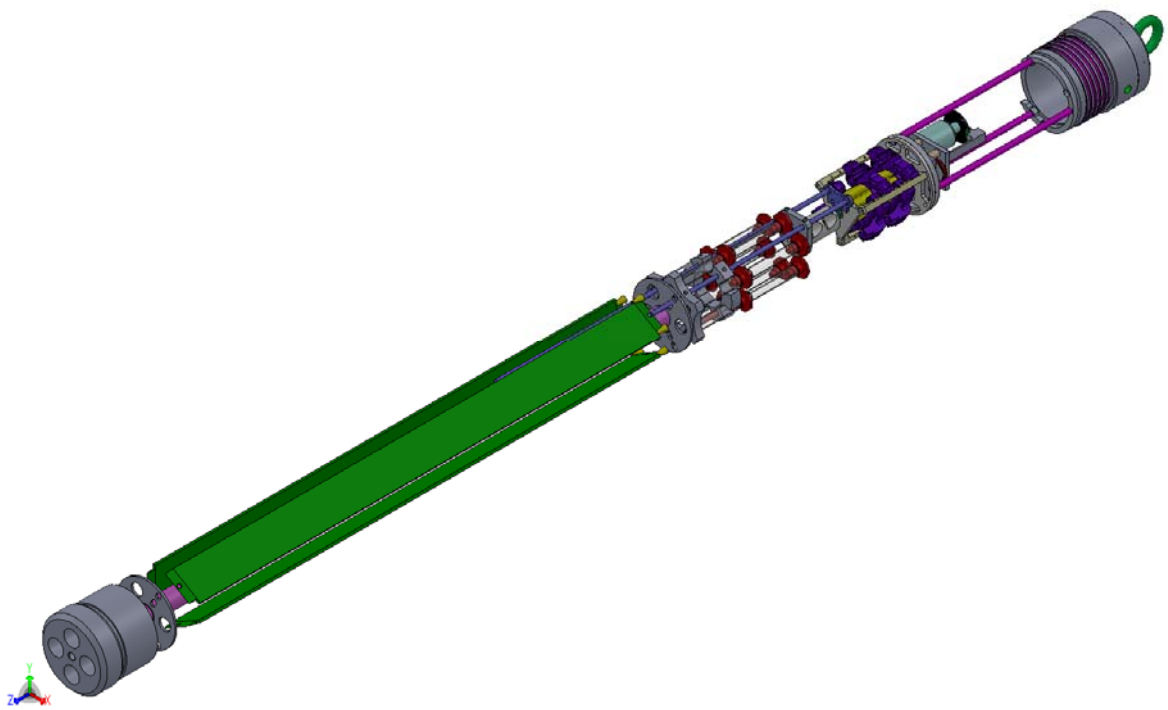

Figure 2-6. Rendering of IS2 sampling unit with peristaltic pump. From top to bottom, the unit contains a six-channel peristaltic pump, distribution manifold, arrays of SPE cartridges (six cartridges in parallel, two arrays in series), and three effluent capture bags.

The peristaltic pump was a development from the ISMA (Halden et al., 2012), and is modified from a commercial off-the-shelf (COTS) Ismatec MiniClick 6 Reglo-E peristaltic pump unit (Part Number ISM1126; IDEX Health & Science, LLC; Oak Harbor, Washington, USA). Power and control for the unit is provided by a Reglo-E Digital control unit sourced from the same vendor (Part Number IS3187).

During development of the IS2 sampler, extensive use was made of computer-aided drafting and design (CAD; SolidWorks, Dassault Systèmes SolidWorks Corporation, Waltham, Massachusetts, USA), to develop prototypes and to maintain a record of the parts developed for the instruments. The maintenance of this part files quick redevelopment and assembly the

sampler in new configurations for applications that include simultaneous sampling of surface water and sediment water in a lake or pond. Rapid prototyping was also applied, to produce flexible parts needed for the peristaltic pump system.

A detailed description of the demonstrated embodiment of the 3.5-inch peristaltic pump submersible is presented in Section 5.3, Design and Layout of Technology Components

2.2.3 Development of 3.5-Inch Outer Diameter Reciprocating Sampling Unit

Demonstration of the IS2 sampler at the former Williams AFB (See Section 5.5, First Demonstration: Former Williams AFB) provided a great deal of insight into the requirements of the operating modes of the IS2 sampler, particularly when used in effluent capture mode. As a result of design discussions following that demonstration, the peristaltic pump was determined to be particularly suitable for effluent capture mode in shallow (<10 ft) submergence or for effluent discharge. To accommodate additional site parameters, a new reciprocating pump design with check valves was generated and incorporated into the IS2 sampler (Figure 2-7). This pump utilizes a SilverPac C motor (Part Number CO-4118S-01, Lin Engineering, Morgan Hill, California, USA) to drive a custom 6-channel syringe pump. Power and control for this unit are provided by a custom 24-V DC system and software developed by the project team.

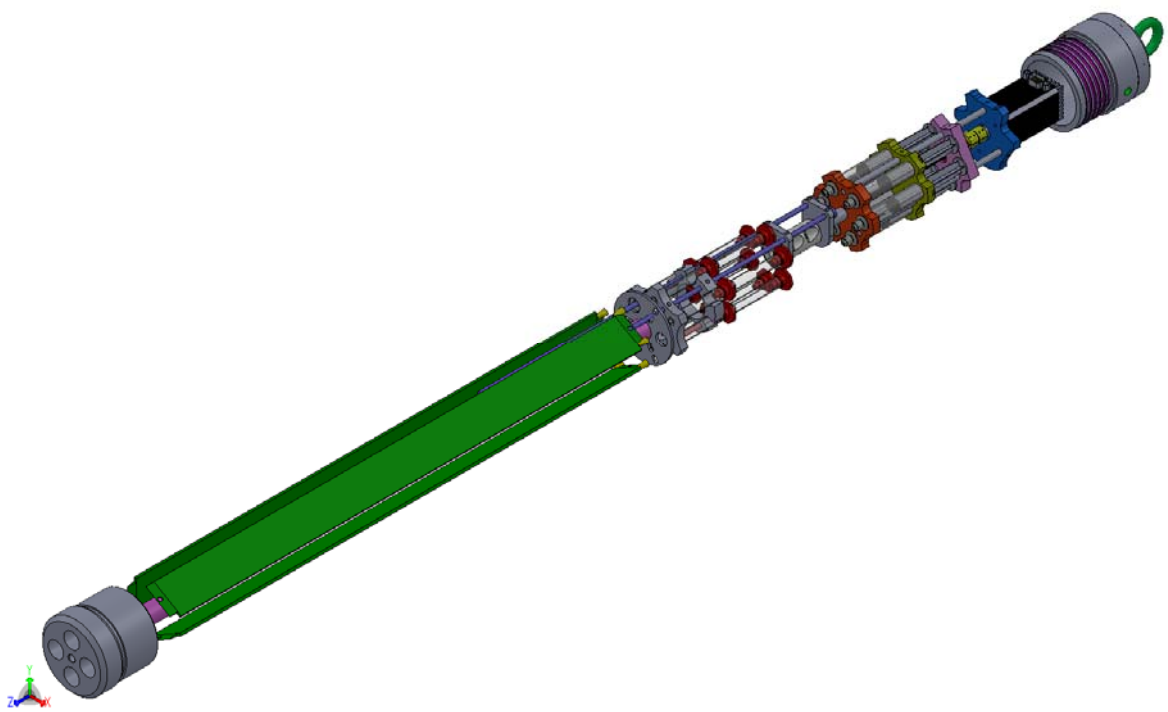

Figure 2-7. Rendering of IS2 sampling unit with reciprocating pump. From top to bottom, the unit contains a six-channel reciprocating pump, distribution manifold, arrays of SPE cartridges (six cartridges in parallel, two arrays in series), and three effluent capture bags.

The reciprocating syringe pump design includes inflow and outflow check valves, the break pressures of which can be selected to achieve effluent capture even under circumstances of high external pressure. This design also allows the accommodation of glass syringes as the fluid driver, a solution which offers better chemical compatibility for some contaminant species than the peristaltic pump tubing allows.

A detailed description of the demonstrated embodiment of the 3.5-inch reciprocating syringe pump submersible is presented in Section 5.3, Design and Layout of Technology Components.

2.2.4 Development of 1.5-Inch Outer Diameter Peristaltic Sampling Unit

In addition to the aforementioned 3.5-inch sampling units, a 1.5-inch OD prototype sampling unit (Figures 2-8 and 2-9) was developed in anticipation of the need to perform *in situ* solid phase extraction in 2-inch wells. This would greatly increase the number of locations at which IS2 sampling could be performed, as it would enable access to contaminated aquifers via piezometers and direct-push systems. The 1.5-inch peristaltic sampling unit contains a single sampling channel driven by a miniature peristaltic pump (Part Number 3200243; The Dolomite Centre Ltd, Royston, UK).

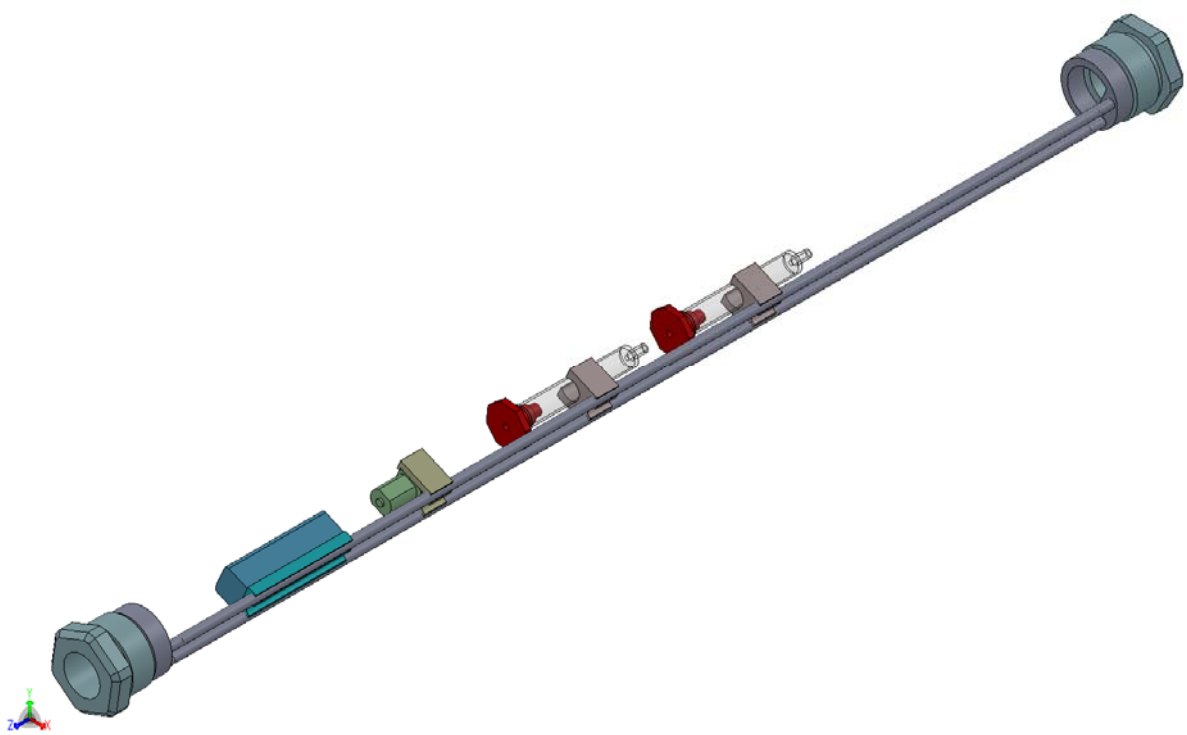

Figure 2-8. Rendering of 1.5-Inch IS2 sampling unit. From top to bottom, the unit contains a framework up which SPE Cartridges are attached in series, with the fluid train driven by a single-channel peristaltic pump, powered by an on-board battery.

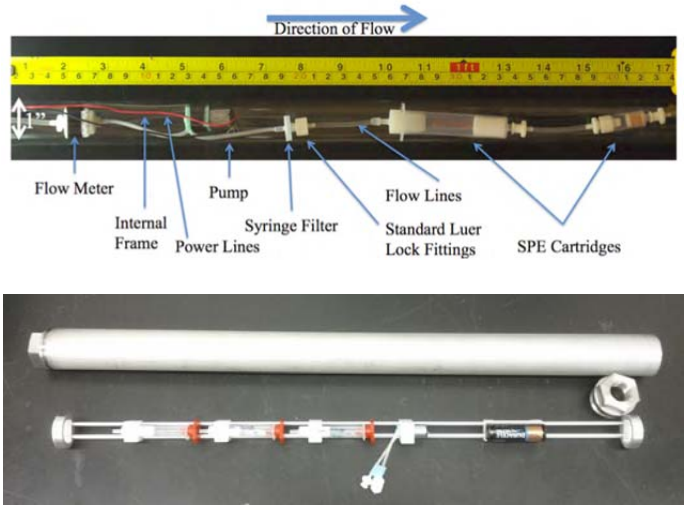

Figure 2-9. 1.5-Inch OD IS2 sampling unit as proposed (top) and embodied (bottom).

2.3 ADVANTAGES AND LIMITATIONS OF THE TECHNOLOGY

The principal advantage of the IS2 technology over contemporary sampling methods is the elimination of many sample handling and processing steps, which will lead to:

- Reduced cost across the sampling process by reducing consumables, shipping and handling, and generation of hazardous and non-hazardous wastes.
- Improved reproducibility by eliminating losses during handling.

Further, the IS2 technology has the advantage of using a single sampling cartridge to extract the analytes of interest from 100s of ml of water (Yamashita et al., 2004). The practical effect is that, after loading in situ, an array of six cartridges can represent more than six liters of site groundwater. This preconcentration, which represents a significant reduction in the volume of material that moves between the site and the laboratory, also suggests that the IS2 technology should improve the detection and quantification limits of any analytical method into which it is incorporated.

Limitations of this approach may include:

- Significant start-up costs in equipment (i.e., the IS2 sampling unit)
- Availability, in prefabricated cartridges, of sorbent materials with chemistry favorable for the contaminants of interest
- Well construction and site hydrology, which determine the mode of operation of the sampler (i.e., effluent capture or discharge modes)

3.0 PERFORMANCE OBJECTIVES

The Performance Objectives from the ER-201122 Demonstration Plan are presented in Table 3-1 and 3-2 and the subsequent subsections. Performance Assessment is provided in Section 6.0, and provides updates that are presented in reflection of the demonstrations.

Table 3-1. Quantitative performance objectives.

Performance Objective	Data Requirements	Success Criteria	Results
Quantitative performance Objectives			
Demonstrate agreement with current methods (i.e., accuracy, precision)	Compare contaminant concentrations and coefficients of variability between replicate samples for data obtained using (a) the IS2 and (b) field practices currently in use at the site	IS2 measurements are within ± 30% of values obtained by co-analyses performed using typical field methods	Objective Met at 2nd Site*
Demonstrate time-averaged sampling capability	Analyze contaminants in two parallel systems: one representing IS2 collection cartridges, the other bags storing groundwater from bypass lines	No statistically significant difference between results from IS2 sampling and analysis of a time-averaged, composite sample, as determined by Student's *t*-test	Objective Met
Demonstrate operability under environmental conditions	Compare volume of effluent generated in sampling and bypass mode. Compare IS2-generated concentration data with measurements for water collected in bypass mode.	No statistically significant difference between predicted and actual volumes of water processed, as determined by Student's *t*-test. Analytes from high-turbidity water shown to become concentrated within acceptable QA/QC range (± 30% deviation)	Objective Met

*Logistical requirements caused conventional samples from 1st Site to be taken at different depths and with different well preparation methods, which complicates direct comparisons to IS2 data.

Table 3-2. Qualitative performance objectives.

Performance Objective	Data Requirements	Success Criteria	Results
Qualitative Performance Objectives			
Demonstrate favorable labor requirements	Characterization of effort by persons present during deployment activities (questionnaire)	Questionnaire results indicate that IS2 would not be rejected based on the amount of labor required	Objective Met
Demonstrate utility of IS2's low method detection limits (MDLs)	Show presence of contaminants at trace levels in wells that yield non-detect values when determined by groundwater monitoring techniques other than the IS2	IS2 can detect contaminants in wells that show "non-detect" values when monitored with conventional groundwater monitoring strategies	Objective Met
Demonstrate reduced generation of hazardous waste	Volume of excess waste generated per sample (L/sample)	Waste volume generated less than that of co-analyses performed using typical field methods	Inconclusive
Demonstrate favorable cost economics	Cost per sample including sampling, analysis, and waste disposal (dollars/sample)	Per-sample costs are for IS2 are comparable or lower than those of co-analyses performed using typical field methods	Objective Met

3.1 DEMONSTRATE AGREEMENT WITH CURRENT METHODS

The IS2 must demonstrate agreement with current sampling and analysis methods. This requires deployment of the IS2 in wells for which a record of measurements and recent characterizations are available.

3.1.1 Data Requirements

The concentration results provided by the IS2 will be compared with grab samples obtained by the deploying team and with concentration data obtained from the regular site monitoring activity. These validation experiments will be conducted only at a site where groundwater concentrations are known to be stable (e.g., absence of tidal movement or hydraulic stress from pumping of adjacent wells). The coefficient of variability will be determined for replicates taken during the sampling event.

This demonstration is intended to directly compare measurements taken by the IS2 to the regular monitoring system, not to demonstrate the advantage or disadvantage of purging techniques. Therefore, to reduce a potential source of disagreement in measurement, the IS2 will be deployed

using the same purging procedure as the current well monitoring system (e.g., no purge for PDBs, according to purging procedures for bailers/pumps, etc.)

3.1.2 Success Criteria

The demonstration will be judged successful if there is no more than ±30% difference between the results generated by the IS2 and by typical field methods, with the prerequisite that the contaminant level in the deployment well of interest is above the MDL of conventional groundwater sampling and analysis techniques.

3.2 DEMONSTRATE TIME-AVERAGED SAMPLING CAPABILITY

By processing large volumes of groundwater over an extended period of time, the IS2 should avoid generating misleading data that may be associated with transients in the well by making time-averaged measurements. Tidal influences, pumping activity, and other stressors may be responsible for altering the direction of flow through the aquifer in the vicinity of the monitoring well, and thus cause transient concentration changes. These changes might affect the quality of conclusions drawn based on grab samples associated with such wells.

3.2.1 Data Requirements

To demonstrate this capability of the IS2, the device will be run in an effluent-capture mode in a monitoring well that is subject to time-dependent stresses. Equipment proven by the *In Situ* Microcosm Array (ISMA, ESTCP ER-200914) will be used to capture all of the groundwater passed through each sampling cartridge in the IS2, as well as equivalent volumes of water that are not processed. These unprocessed volumes, representing composite samples collected over a long period of time, will be characterized using standard laboratory analysis techniques. Results from the IS2-processed samples and the composite samples will be compared.

3.2.2 Success Criteria

Student's *t*-test will be used to evaluate the statistical significance of the difference between results obtained by the IS2 and results obtained by analyzing the bypass samples. The demonstration will be judged successful if there is no significant difference between the methods.

3.3 DEMONSTRATE OPERABILITY UNDER ENVIRONMENTAL CONDITIONS

One concern in moving sample preparation *in situ* is the capability of the device to operate under environmental conditions that might include turbidity or quantities of suspended solids. Potential problems associated with environmental versus laboratory conditions include fouling or clogging of the mechanism. The purpose of this demonstration is to show that the IS2 sampling mechanism is robust under field conditions.

3.3.1 Data Requirements

To demonstrate operability of the IS2 under environmental conditions, the device will be deployed in an effluent-capture mode. The volume of water processed by the IS2 will be compared to pre-deployment predictions based on the device calibration to demonstrate that the device operated without significant clogging and that the predicted value for the volume of water processed was accurate.

3.3.2 Success Criteria

Student's *t*-test will be used to evaluate the statistical significance of the difference between the volume of water processed by the IS2 and the volume of water predicted according to pre-deployment modeling. The demonstration will be judged successful if there is no significant difference between the volumes. Alternatively, if in situ flow meters are used, the volume of water actually processed by the IS2 should be statistically indistinguishable from the volume predicted based on in-well flow measurements. The demonstration will further be judged successful if there is no more than 30% difference between concentration results obtained by processing IS2-loaded sorbent cartridges with results obtained directly from bypass water.

3.4 DEMONSTRATE FAVORABLE LABOR REQUIREMENTS

The sensitivity of most methods of field sampling and laboratory analysis can be improved beyond that typically seen in environmental studies, but only with unacceptable increases in complexity. Deployment of the IS2 is more complicated than deployment of passive diffusion bags or bailers, but should not be perceived as an unacceptable increase in deployment complexity by its users. To understand the relationship between the labor required to deploy the IS2 and its benefits, persons associated with contemporary sampling programs will be present during the demonstrations. These personnel will be asked to give qualitative analyses of the practicality of the IS2 process.

3.4.1 Data Requirements

A questionnaire will be distributed to persons who are present for IS2 demonstrations.

3.4.2 Success Criteria

The demonstration will be judged successful if respondents to the questionnaire compare IS2 deployment favorably to the sampling methods they have employed previously.

3.5 DEMONSTRATE UTILITY OF IS2's LOW MDLs

As a potential sentinel technology, *in situ* sample preparation should improve the resolution of the monitoring regime by lowering method detection limits (MDLs). This is accomplished by processing and concentrating contaminants from relatively large volumes of groundwater. A sample collected by the IS2 might represent several liters of processed groundwater; while this process can be performed in the laboratory, the IS2 procedure may provide significant

advantages in both sample integrity and the logistics of returning large volume samples to the laboratory.

3.5.1 Data Requirements

To demonstrate this capability of the IS2, it must be deployed in:

a. A well where the concentration of contaminants is below above the limit of detection but below the limit of quantification for the current sampling method at the site
b. A well where the concentration of contaminants is below the method detection limit for the current sampling method at the site, but where the location of the well and the hydraulic gradient suggest that the contaminant might be exist at lower concentrations

3.5.2 Success Criteria

The demonstration will be judged successful if results generated by the IS2 enable:

a. The quantification of contaminant concentrations at a level that is below the limit of quantification for the current sampling method at the site
b. The detection of contaminants in wells where the concentration is below the method detection limit for the current sampling method at the site, but where the site hydrogeology suggests that the contaminant might exist

3.6 DEMONSTRATE REDUCED GENERATION OF HAZARDOUS WASTE

Purge water, sampling materials, and the remaining liquid sample after analysis all constitute hazardous waste and an economic sink for typical field methods. One of the goals for moving sample preparation into is to reduce, as much as possible, the generation of hazardous waste during and after the sampling event.

3.6.1 Data Requirements

The volume of hazardous waste generated by each sampling event (for the IS2 technology and co-analysis by typical field methods) will be recorded.

3.6.2 Success Criteria

The demonstration will be considered successful if the IS2 technology generates less hazardous waste than typical field methods for each sampling event.

3.7 DEMONSTRATE FAVORABLE COST ECONOMICS

Reduced method detection limits are certainly possible with current field methods, but only at great expense. IS2 technology is expected to reduce costs while improving results, by reducing hazardous waste generation and improving the stability and density of samples and thus reducing the shipping costs of the sampling event.

3.7.1 Data Requirements

The cost per sample generated by the IS2 and co-analysis using typical field methods will be tracked during field deployment. Cost per sample includes sampling, analysis, and waste disposal.

3.7.2 Success Criteria

The demonstration will be considered a success if the cost per sample for the IS2 are comparable to or lower than that of the typical field methods used at the demonstration site.

4.0 SITE DESCRIPTION

Two sites were selected for demonstrations of the IS2 sampler: the former Williams Air Force Base (AFB) in Mesa, AZ, and Naval Air Station (NAS) North Island in Coronado, CA.

4.1 SITE SELECTION CRITERIA

The site selection process was initiated by determining selection criteria, which included:

(i) The presence of one or more target analytes as enumerated in the proposal
(ii) A narrowly spaced monitoring network that includes non-detect wells, providing opportunities to redraw contaminant plumes at a higher resolutions
(iii) The presence of tidal water movement or hydraulic stress leading to known temporal changes in GW chemistry
(iv) Ongoing monitoring activities
(v) Location of site in driving distance from Phoenix or near airport for convenient site access
(vi) Accessibility of site to U.S. and foreign-national team members
(vii) Presence of contaminants across a range of concentrations to enable study of ultra-low detection limits and risks of saturation of extraction cartridges.

Publicly available environmental restoration documents were then reviewed for a number of sites across Arizona and neighboring states, including:

- Marine Corps Air Station Yuma, Yuma, Arizona
- Camp Navajo, Bellemont, Arizona
- Air Force Plant 44, Tucson, Arizona
- Luke Air Force Base, Glendale, Arizona
- Former Williams Air Force Base, Mesa, Arizona
- Naval Air Station North Island, Coronado, California

Some of these sites were eliminated for lack of documented groundwater contamination that would be conducive to a demonstration. Former Williams AFB and NAS North Island were the most favorable sites in terms of the selection criteria. A matrix of the criteria and the applicability of each site is presented in Table 4-1.

Table 4-1. Site selection criteria for the demonstration locations.

Parameter	Preferred Value(s)	Relative Importance (1-5, with 1 being highest)	Former Williams AFB	NAS North Island
Presence of VOCs in groundwater	Yes	2	Yes	Yes
Presence of SVOCs in groundwater	Yes	2	Yes	No
Presence of metals or inorganics in groundwater	Yes	2	No	Yes
Detect and non-detect monitoring wells available for same plume	Yes	2	Yes	Yes
Inner diameter of Well	4" and 2"	4	4" and 2"	4" and 2"
Tidal or other time-dependent stress	Yes	5	No	Yes
Recent (<1 year) monitoring activities	Yes	2	Yes	Yes
Location convenience to ASU	1 = easy, 5 = difficult	1	1	3
Accessible to U.S. and foreign national team members	Yes	1	Yes	Yes

4.2 FORMER WILLIAMS AIR FORCE BASE, MESA, AZ

The former Williams AFB (Figure 4-1) covers more than 4,000 acres of land located in Mesa, Arizona, approximately 30 miles southeast of Phoenix. Williams AFB operated as a flight training school from 1941 until the base was closed under the Base Realignment and Closure (BRAC) in 1993. Much of the converted property is now in use by public and private entities including the Phoenix-Mesa Gateway Airport and the Arizona State University (ASU) Polytechnic Campus.

Figure 4-1. Former William AFB, Mesa, AZ. The site of the former fuel storage tanks (ST-12) is highlighted ("Former Williams AFB," 2011).

4.2.1 Former Fuel Storage Tank Site, ST-12

The Former Fuel Tank Storage Site (ST-12) in Operating Unit (OU) 2 was operated from 1977 to 1989. This site was impacted by up to 1.5 million gallons of JP-4 from leaking underground storage tanks (USTs) and their associated fuel distribution lines. Free-phase recovery, a thermal-extraction pilot plant, and soil vapor extraction have all been performed at this site, which continues to be impacted by BTEX fuel components, benzene and toluene in particular. Contaminants monitored at ST-12 include total petroleum hydrocarbons (TPH, both diesel and gasoline associated), volatile organic compounds (VOCs, including benzene, toluene, and naphthalene), semi-volatile organic compounds (SVOCs), and metals (AFCEE, 2011b).

4.2.2 Site Geology/Hydrogeology

The former Williams AFB lies at an altitude of 1340 ft on generally flat land that slopes gently to the west. The underlying geology is characterized by alluvium-filled depression. The six geological layers underlying the site, from deepest to shallowest, are crystalline rocks, extrusive rocks, Red Unit, Lower Unit, Middle Unit and the Upper Unit. These layers are described briefly in Table 4-2.

Table 4-2. Geological formations underlying the former Williams AFB (AFCEE, 2011a; AMEC Environment & Infrastructure, 2013).

Stratigraphic Lithology	Depositional Conditions	Approximate Thickness (ft bgs)	Type of Aquifer	Unit
Gravel, sand, silt, and clay.	Open basin; channel, floodplain, alluvial fan	0 to 300	Unconfined	Upper Unit
Interbedded coarse- and fine-grained layers		0 - 160	Unconfined	Vadose Zone
Coarse-grained, permeable		145-160	Unconfined	Cobble Zone
Interbedded coarse- and fine-grained layers		160-195	Unconfined	Upper Water Bearing Zone
Silty clay layer		195-210	Unconfined	Low Permeability Zone
Interbedded coarse-and fine-grained layers (coarsest and most permeable unit)		210-240	Semi-confined	Lower Saturated Zone
Low permeability clay		240-260	Semi-confined	Aquitard
Silt, siltstone, silty sand, and gravel.	Closed basin; playa, alluvial fan, fluvial	<100 to 1,000	Unconfined, leaky confined	Middle Unit
Clay, silt, mudstone, evaporites, sandstone, gravel, conglomerate, and andesitic basalt.	Closed basin; playa, alluvial fan, fluvial	600 to 10,000+	Unconfined, leaky confined	Lower Unit
Breccia, conglomerate, sandstone, siltstone, and local basaltic to rhyolitic flows and pyroclastic rocks.	Alluvial fan, fluvial	2,000+	Confined	Red Unit

The Upper, Middle, Lower, and Red Units contain the regional groundwater supplies, with the Middle Unit being the largest and most productive water-bearing unit in the basin. Beneath the former Williams AFB, the Upper and Middle Units are separated by a clay aquitard. Water levels declined markedly during the 1960s and 1970s, but have been rising steadily since 1978. The primary (Middle Unit) aquifer is presently approximately 290 ft bgs.

4.2.3 Contaminant Distribution

This source of this site is extensive light, non-aqueous phase liquid (LNAPL) contamination which resulted from long-term leakage from the former fuel tank site and was subsequently smeared by rising groundwater levels. From this source, a dissolved plume of fuel components spreads largely to the west. A site map illustrating the distribution and concentration of benzene is presented in Figure 4-2. The contamination is largely limited to the upper unit by the aquitard that separates it from the middle unit, thus sparing the most important units for water in the community.

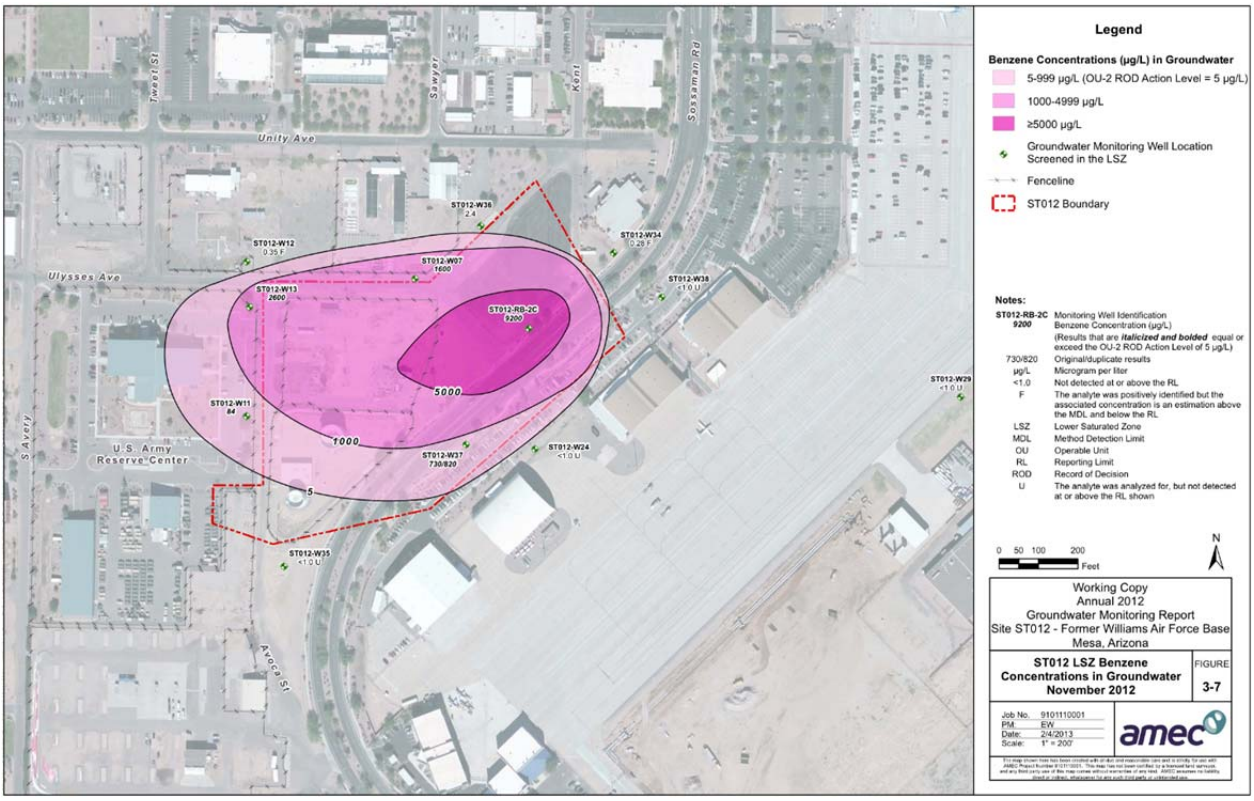

Figure 4-2. Site map of ST-12, showing concentrations for BTEX components in groundwater (AFCEE, 2011b).

4.3 NAVAL AIR STATION NORTH ISLAND, CORONADO, CA

Naval Air Station North Island is located in San Diego County, California, southwest of the city of San Diego, on the tip of the Silver Strand peninsula with the city of Coronado adjacent and to the east (Figure 4-3). The remainder of NAS North Island is surrounded by water, the Pacific Ocean to the south and San Diego Bay on the west and north. NASNI was commissioned in 1917 and is currently an active military base. Since 1935, NASNI has been occupied exclusively by the Navy.

4.3.1 Operable Unit 20 (OU-20)

Operable Unit 20 (OU-20) is located in the northeast portion of the island. Metal-plating processes performed in Buildings 1 and 2 at OU-20 are the likely source of chromate in groundwater. Former operations at Building 1 included the repair and maintenance of helicopter blades, as well as the manufacture and repair of fiberglass components. Activities in support of these operations included parts grinding, cleaning, anodizing, paint stripping, and painting. Additional contributions to the subsurface contamination may have included overflow of subsurface pits used for temporary waste storage, and the cleaning of aircraft fuel tanks outside of the buildings (Halden, 2012).

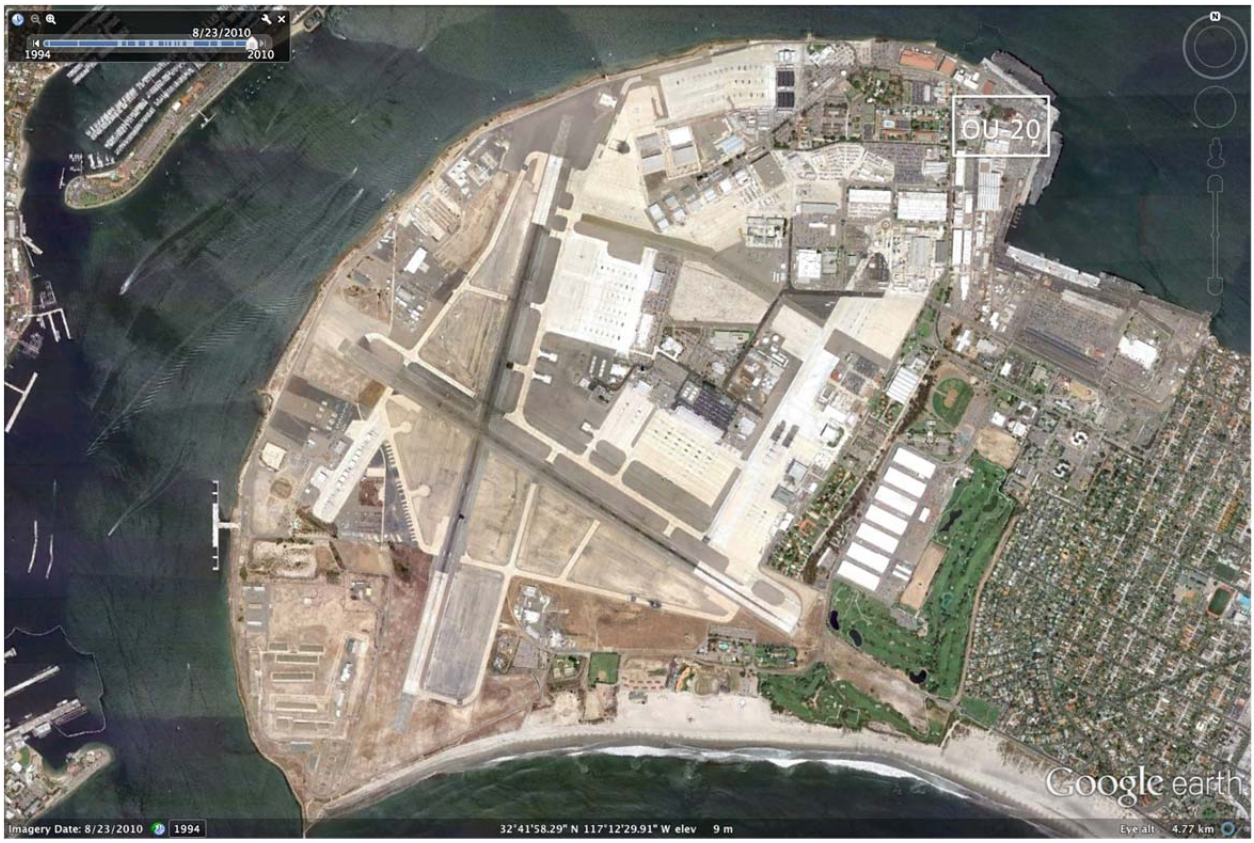

Figure 4-3. Naval Air Station North Island, Coronado, CA. OU-20 is highlighted ("Naval Air Station North Island," 2010).

4.3.2 Site Geology/Hydrogeology

NASNI is located on relatively flat land with an average elevation of approximately 20 feet above mean sea level (AMSL). The island was enlarged beginning in the 1930s through placement of hydraulic fill dredged from San Diego Bay onto tidal flats and near-shore areas. The peninsula has been entirely graded for development, and the area surrounding Buildings 1 and 2 is covered with asphalt, concrete, or maintained landscaping. The hydraulic fill consists of medium-grained to coarse-grained, poorly graded sands and silty sands. In some areas, the fill is underlain by organic silts and clays.

Groundwater recharge is minimal and occurs primarily from irrigation. Shallow groundwater beneath NASNI is unconfined, and groundwater occurs at depths from approximately 4 to 25 feet below ground surface (bgs). Groundwater in the investigation area is found at approximately 5 ft AMSL and flows north-northeast, in communication with San Diego Bay. The groundwater gradient across the study area is relatively flat and ranges from 0.001 to 0.002. Aquifer transmissivity values calculated from slug and pumping tests in the Building 379 area ranged from 0.5 to greater than 1000 ft^2/min, with an approximate value of 400 ft^2/min calculated nearest to the proposed deployment location (SES-TECH 2010).

4.3.3 Contaminant Distribution

Volatile Organic Compound (VOC) and chromate plumes have been well-characterized in the northeastern portion of NAS North Island. The VOC plume originates from the vicinity of Building 379 and extends down gradient to the northeast for approximately 2000 ft, with several sources contributing. The chromate plume originates in the vicinity of Building 2, the former anodizing shop in Building 2 being most likely source of chromate, and extends down gradient approximately 700 ft (Figure 4-4).

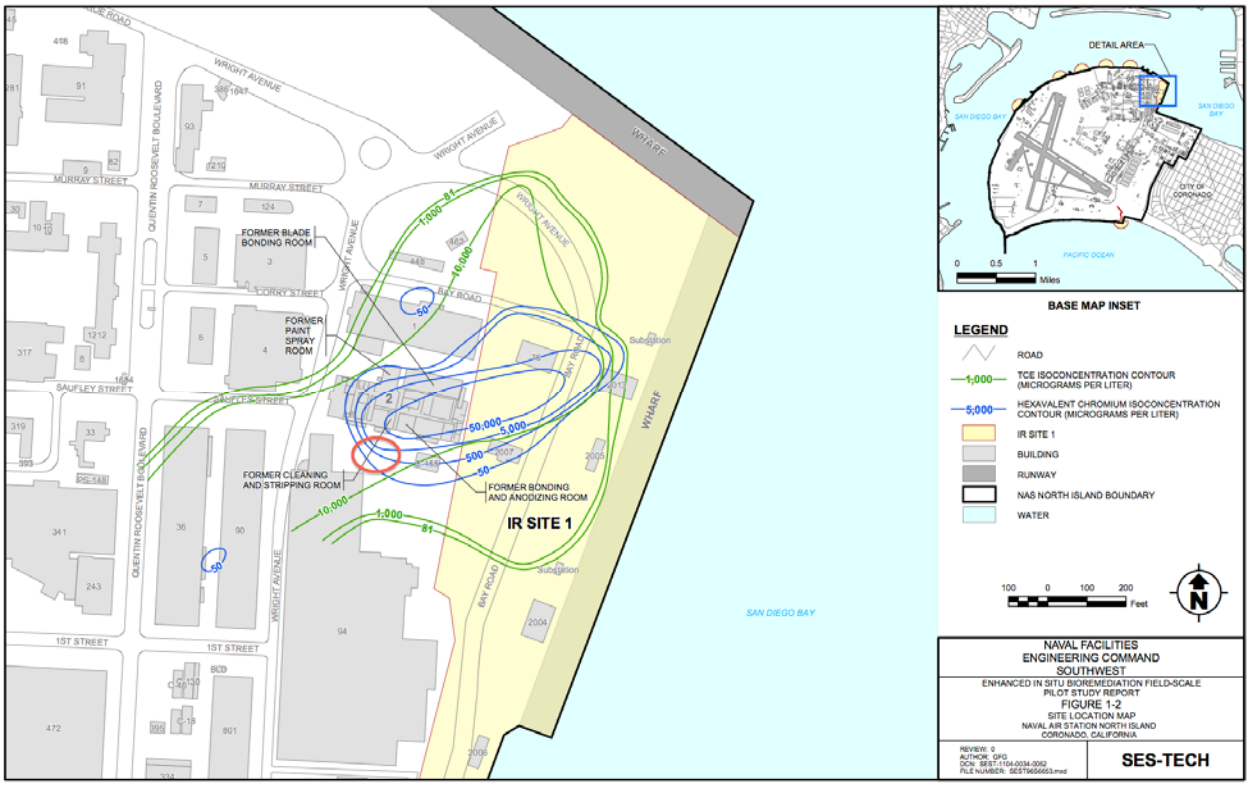

Figure 4-4. VOC and chromate plumes at NASNI OU-20 (SES-TECH 2010).

5.0 TEST DESIGN

Broadly, the experiments performed are comparisons of contaminant concentration results obtained in closely-timed sampling events performed by the site manager using conventional methods and by the IS2 team using the IS2 sampler. The process of designing and executing a sampling event with the IS2 sampler provides the opportunity to gather data that supports all of the performance objectives.

Site-specific experimental parameters are discussed in sections 5.5 and 5.6.

5.1 CONCEPTUAL EXPERIMENTAL DESIGN

Solid phase extraction chemistry typically requires an *a priori* understanding of the classes of contaminants that are of interest, in order to obtain acceptable recovery from the matrix. While the IS2 sampler could be used to prospect for contaminants from a few desired classes, it is anticipated that this system will be used more frequently to obtain time-averaged composite samples, large-volume extractions to improve detection limits, or both, in sites where the contaminant chemistry is already largely known.

The design of a sampling event with the IS2 thus incorporates some or all of the following steps:

(i) Determination of the appropriate SPE material or combination of materials for the contaminants of interest
(ii) Preparation of the sampling unit with a suitable SPE material
(iii) Preparation of the well if necessary (i.e., by purging)
(iv) Placement of the device in the screened portion of the targeted well
(v) Equilibration of the well as necessary (i.e., giving time for water levels to return to equilibrium with the surrounding formation)
(vi) Sampling at a prescribed rate for the duration of the event
(vii) Retrieval of the device
(viii) Analysis of the exposed and loaded cartridges therein.

For demonstration and validation purposes, this activity will be bracketed by:

- An initial, regularly scheduled sampling event by the site manager using standard practices. The analytical results from this event establish the basic performance parameters for the IS2 technology.
- A pre-deployment sampling event by the IS2 team using a bailer.
- A post-deployment sampling event by the IS2 team using a bailer.

The pre- and post-deployment sampling events by the IS2 team will be used for quality control and to provide working data for the analysis of the results of the IS2 deployment for the period of time in which official results are not yet available.

5.2 BASELINE CHARACTERIZATION ACTIVITIES

Baseline characterization for each site was established by:

(i) Reviewing site documentation and the results of previous studies
(ii) Scheduling the demonstration to coincide with a sampling event performed by the site restoration manager
(iii) Independently sampling the well pre- or post-demonstration

5.2.1 Document Review

A review of the documentation for the site and the demonstration wells was conducted in order to establish the baseline parameters for the experiment. This review focused on the concentrations and trends in concentration of the contaminant of interest. Other data and trends that were established (if possible) during document review included the depth to groundwater, the hydraulic gradient, the linear velocity of the groundwater, the sediment type, the porosity and the hydraulic conductivity of the aquifer.

5.2.2 Independent Sampling

In addition to the documented sampling events conducted by the site restoration manager, the IS2 sampling team also conducted an independent sampling event using standard bailers and prepared samples for an independent laboratory analysis.

5.3 TREATABILITY OR LABORATORY STUDY RESULTS

Laboratory studies were performed to demonstrate the feasibility of the method, and in anticipation of any field studies. This was typically accomplished by replicating aspects of field studies on the bench with groundwater sourced from relevant sites, with the site contaminants intact or spiked with a simulated contaminant mixture.

In addition to bench studies before any field demonstration, there were a series of early field deployments of the IS2 sampler to test the mechanism and develop the standard operating procedure for field work.

5.3.1 Feasibility Study: Cartridge Obstruction by Fouling

An early concern of the authors and reviewers was the potential for the available SPE cartridges to become obstructed by sediments accumulated during large-volume extractions. This effect was tested by loading a common SPE cartridge (Strata C-18; Phenomenex, Torrance, California, USA) with large volumes of groundwater. Three of the cartridges additionally protected by glass fiber filters (Acrodisk AP-4523T; Pall GmbH, Dreieich, DE).

A peristaltic pump was programmed to deliver groundwater at 5 ml/hr to the cartridges. The groundwater samples used for the test were taken from perchlorate-contaminated aquifer to which the team had access, and which were known to contain significant amounts of salts (Table

5-1). Over 23 days, the average flow rate decreased by approximately 20% in all cartridges (Figure 5-1). This was not a significant impediment, and much of this decrease can also be attributed to wearing of the peristaltic pump tubing. Measurements of the pressure at the entrance to each cartridge were also taken (Figure 5-2), and it was noted that the filters appeared to be accumulating enough particulate matter to influence the pressure in the cartridges, the absolute difference between the two groups was not very large.

Table 5-1. Example anion concentrations in groundwater used for feasibility studies.

Anion	Concentration (mg/L)
Chloride	210 ± 4
Sulfate	45 ± 1
Nitrate	7.9 ± 0.3

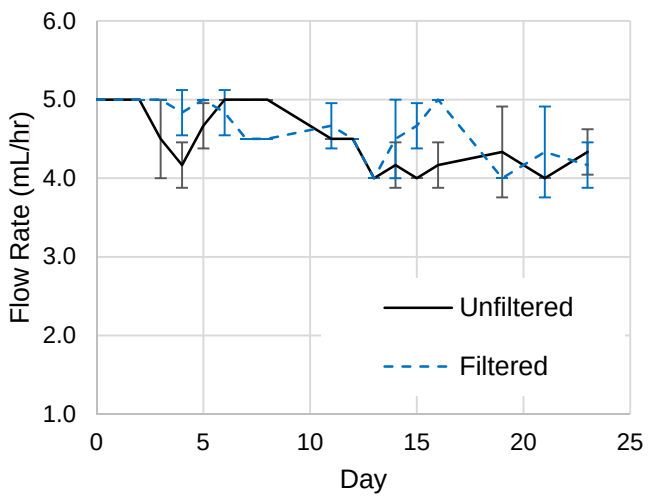

Figure 5-1. Flow characteristics through C-18 SPE cartridges over several weeks.

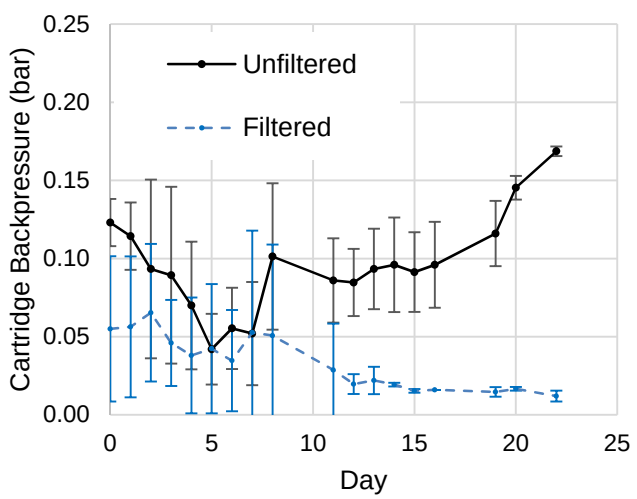

Figure 5-2. Pressure observed upstream of C-18 cartridges over several weeks.

While groundwater is not typically high in turbidity, surface waters contain significantly greater quantities of particulate matter, particularly suspended organic matter. The project team has tested the feasibility of using the IS2 sampler and method in surface waters and to sample sediment pore waters in lacustrine environments. Visible accumulation of suspended organic matter upon the entrance frit of SPE cartridges (Figure 5-3) has been noted, but there is no evidence that this accumulation restricted flow through the cartridge appreciably.

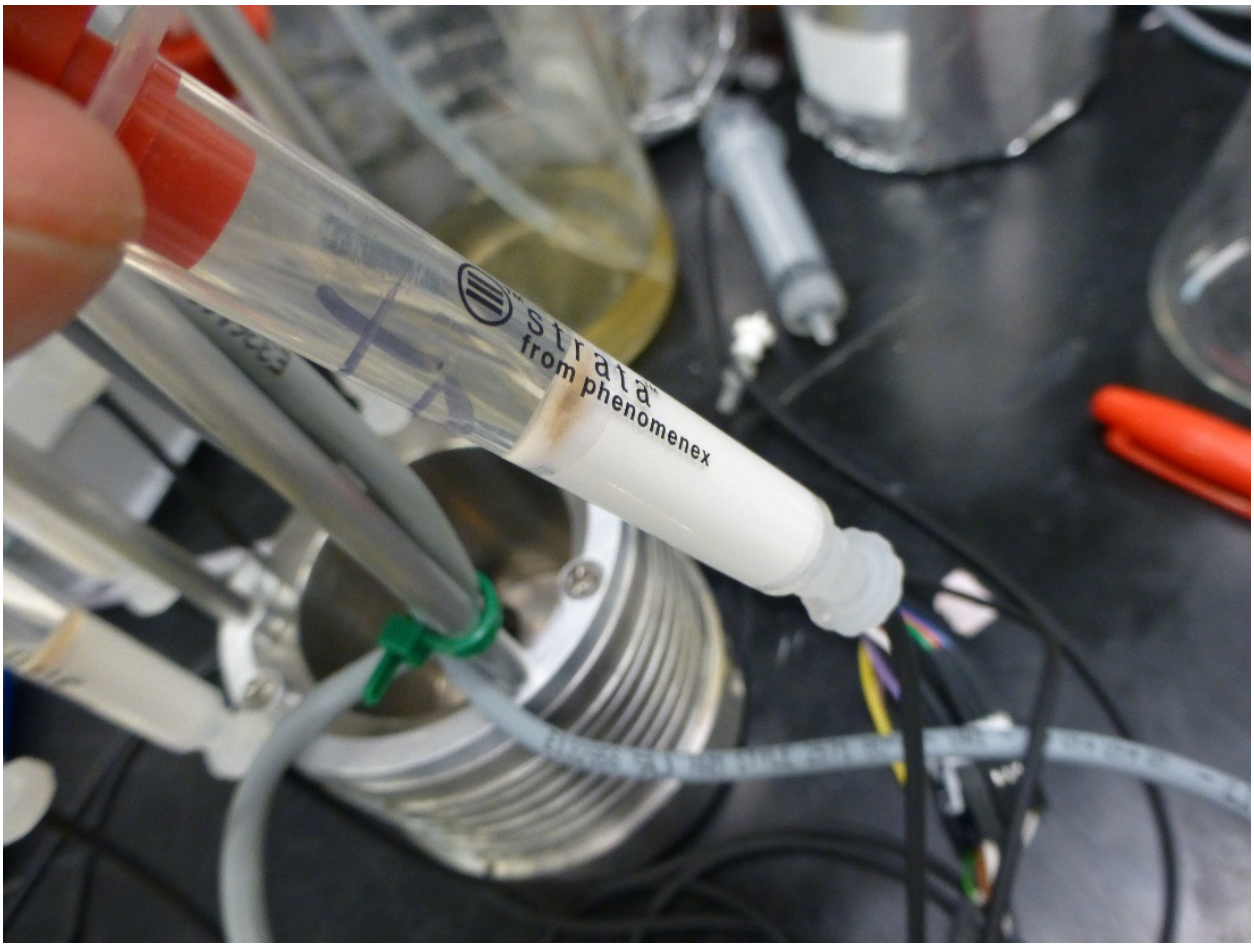

Figure 5-3. Accumulation of surface water sediments upon the frit of an SPE cartridge.

5.3.1: Feasibility Study: Contaminant Applicability

A number of compounds were screened for applicability to the IS2 method from either contaminated site samples or from groundwater spiked to environmentally relevant contaminant concentrations. Contaminants that were screened in the laboratory include those listed in Table 5-2.

Table 5-2. Compounds screened in the laboratory for IS2 sampling.

Chemical Name	CAS No.	Typical Uses	SPE-Relevant Properties
Perchlorate ion	14797-73-0	Oxidizer	Anion
Chromate ion	11104-59-9	Metal Plating	Anion
Benzene	71-43-2	Fuel Component	Aromatic
Toluene	108-88-3	Fuel Component	Aromatic
Ethylbenzene	100-41-4	Fuel Component	Aromatic
Isopropylbenzene	98-82-8	Fuel Component	Aromatic
Parabens (methyl-, ethyl-, propyl-, butyl-, benzyl-)	Multiple	Antimicrobial	Aromatic (Benzoates)
Naphthalene	91-20-3	Fuel Component	Polycyclic Aromatic
Dibenzofuran	132-64-9	Insecticide	Polycyclic Aromatic
Fipronil	120068-37-3	Insecticide	Polycyclic Aromatic
Triclosan	3380-34-5	Antimicrobial	Polycyclic Aromatic
Triclocarban	101-20-2	Antimicrobial	Polycyclic Aromatic
Bisphenol-A	80-05-7	Plastic Monomer	Polycyclic Aromatic
Tetrabromobisphenol-A	79-94-7	Flame Retardant	Polycyclic Aromatic
N-Nitrosamines	Multiple	Disinfection Byproducts	Nitrosamine

5.3.1 Preliminary Study: Perchlorate

The perchlorate ion is an emerging contaminant frequently associated with spent munitions. A preliminary study targeting perchlorate was conducted using groundwater samples acquired from an impacted aquifer in the Salt River Valley near Mesa, Arizona. The site is characterized by good hydraulic conductivity with water at 187 ft bgs in fluvial material consisting of silty sands and gravels, poorly and well-graded sands, clayey sands, and clayey gravels. Access to the aquifer was provided by a four-inch monitoring well screened from 109 to 259 ft bgs. Groundwater samples were recovered from the well for characterization and bench development of the IS2 sampler using a bailer or Hydrasleeve (GeoInsight, Las Cruces, New Mexico), transferred to 1-liter HDPE sample bottles, and refrigerated at 4 °C until used. Aliquots of the

groundwater samples were filtered and characterized for a suite of anions by ion chromatography; the most significant components are presented in Table 5-1.

Perchlorate can be effectively removed from aqueous solution by applying ion exchange SPE (Medina, Larson, Extine, & Bednar, 2005). Interference is a challenge when perchlorate exists as a minor co-contaminate in solution with other anions at concentrations 3 to 5 orders of magnitude greater, as the weakly-charged perchlorate ion often exhibits lower affinity for the ion exchange media. For this trial, Strata X-AW 3 mL/500 mg (Phenomenex, Torrence, California) weak anion exchange cartridges were selected. Bench trials showed that when presented with high ionic-strength solutions, this resin exhibited relatively low capacity before breakthrough (less than 10 mL at the salt concentrations noted in Table 5-1) but also offered favorable selectivity and recovery for perchlorate. Quantification was performed on an ion chromatograph (IC) with a conductivity detector. Specific details of the SPE and IC methods are presented in Appendix E.

To simulate a sampling event with the IS2, a bench model of the unit was prepared with three sampling channels (for replicate samples), each with three SPE cartridges in series (increasing sorbent volume to offset the low specific capacity of the sorbent). A fourth channel (bypass) was prepared to collect a composite sample of the same groundwater without solid phase extraction. The bench unit was programmed to deliver 50 mL of groundwater to each channel. The volumes of water actually delivered per channel were recorded, and the liquid composite sample from the bypass was directly characterized for perchlorate. The concentration detected in the bypass sample and the volumes delivered to the sorbent channels were used to estimate the mass delivered to the sorbent channels, and subsequently to estimate the recovery for perchlorate in this experiment. The average recovery was determined to be 77% (Table 5-3).

Table 5-3. Mass balance data for feasibility experiments with perchlorate.

Sample	Processed Volume (mL)	Groundwater Perchlorate Concentration (μg/L)	Recovery (%)
Unprocessed Groundwater	49.7	30.2	-
SPE Eluate	47.2 (±3.3)	23.2 (±0.7)*	77 (±2)

**Calculated from eluate concentration and processed volume.*

In the field, the IS2 sampler is configured either to capture the processed water post-processing or to discharge it back into the well. While the bench trial captured effluent, the programmed dispensation volume values (which differed from the actual values by a few percent) could be used to determine the concentration values that a user of the device would have reported had the device been configured for effluent discharge. A comparison of the data which was generated in each mode is presented in Figure 5-4, illustrating the propagation of the error in the dispense volume values. Though the uncertainty increases, the results are not significantly different.

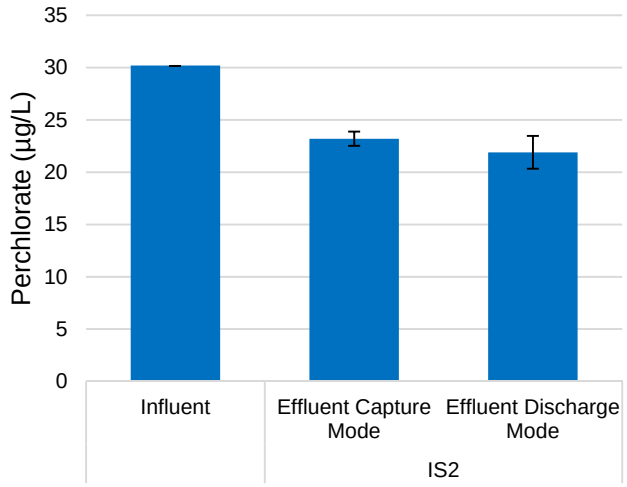

Figure 5-4. Comparison perchlorate concentration data quality observed during preliminary study using effluent capture or effluent discharge mode.

Due to the relatively large sorbent bed volumes required to effectively process such a low volume of groundwater, the present method was determined to be a poor match for an IS2 demonstration. As the purpose of this project was to demonstrate the application of standard methods in the field, further development of an applicable perchlorate method was determined to be outside of the project scope.

Though the perchlorate extraction chemistry demonstrated here was not efficient enough for field use, the site presented an opportunity to test the mechanical operation of the IS2 sampler *in situ* (Figure 5-5) and to develop the deployment procedures. The sampler was deployed twice to a depth of 190 ft bgs. This experience informed the standard operating procedure; most importantly, that while the device as currently embodied can be manually inserted to significant depths, an experienced well support crew with a boom truck (crane) should be employed for depths greater than 60 ft. This experience also lead to the development of the cable management system and significant changes to the internal layout of the device, making it more robust.

Figure 5-5. IS2 Sampler deployed in a monitoring well at the perchlorate site in 2012.

5.4 DESIGN AND LAYOUT OF TECHNOLOGY COMPONENTS

The IS2 technology comprises a submersible sampler, a power and control system connected by a waterproof cable, and the deployment hardware used to secure the device in a well. Two embodiments of the sampler have been developed, one with a peristaltic pump and one with a reciprocating syringe pump.

Power and control for the sampling unit are provided by a multi-channel waterproof electrical cable that connects the subsurface sampling unit to a power and control package on the surface. The control unit can be powered by either a standard 120-V AC connection or by a battery pack (12-V DC for the peristaltic pump system; 24-V DC for the reciprocating syringe pump system). The choice of power source is dependent on the accessibility of the location. The surface package is housed in a weatherproof container and located as conveniently as possible with respect to traffic, theft/vandalism, safety and other considerations at the site (Figure 5-6).

Figure 5-6. IS2 surface package at an installation. Batteries and communication are stored in the waterproof container, and an electrical control cable extends into the well. The surface package location is determined by site safety considerations; here it is located at a restricted-access site, in a low-traffic location.

5.4.1 Peristaltic Pump Sampling Unit

The initially proposed embodiment included a peristaltic pump (Figure 5-7), developed previously under ER-200914, which drives water through an array of SPE or SBSE cartridges. Up to six channels are available for parallel/replicate extractions. This pump has been extensively tested on the bench and in shallow operation in the environment. Performing adequately at atmospheric pressure, such a pump is also expected to function well in effluent discharge mode, where the inlet and outlet pressures are equal. In effluent capture mode, excess inlet pressure has been demonstrated to cause liquid to bypass the pump, rendering the pump incapable of regulating dispensation.

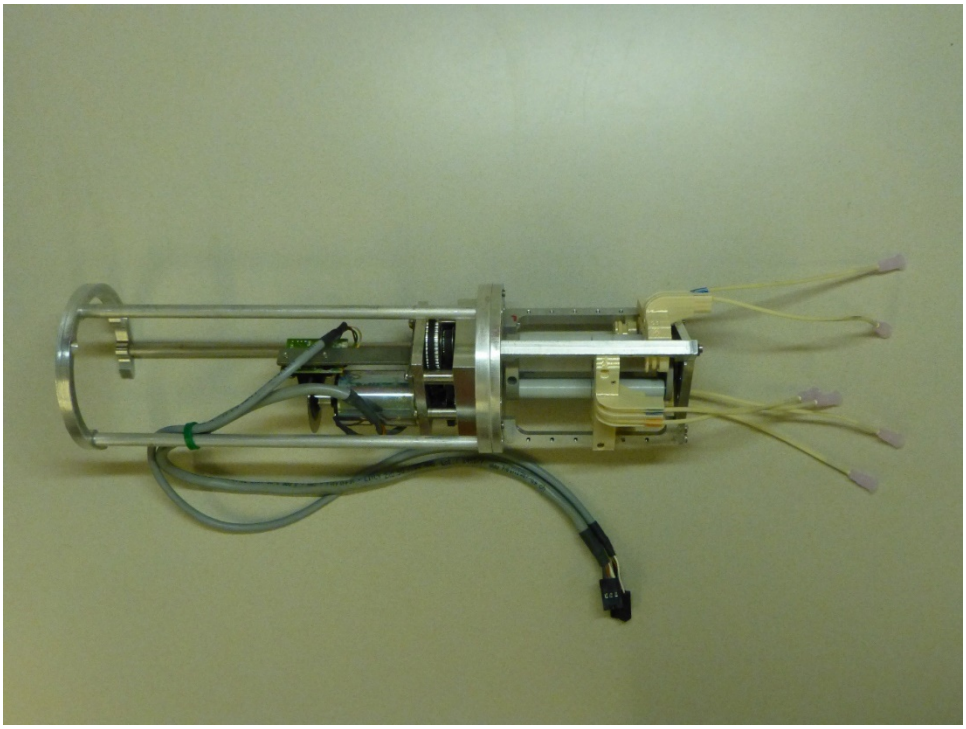

Figure 5-7. Six-channel peristaltic pump developed for the IS2 sampler.

Advantages of a peristaltic pump include high precision, low-flow operation, independent management of six channels, and a disposable fluid train that can be replaced with a manufacturer-validated clean fluid channel (the peristaltic pump tubing) before field deployment. Disadvantages of a peristaltic pump include wear of the peristaltic pump tubing during long-time scale use that may degrade the accuracy of the pump, as well as the limited material selection available for pump tubing, which may result in poor chemical compatibility with some site contaminants.

The assembled sampler (Figures 2-2 and 5-8) is housed in a shell made of an inert material (stainless steel in the present embodiment), with ported, removable caps at both ends which allow for electrical power and control, and liquid inlet and outlet lines. In addition, a new framework for attaching internal functional units in the submersible was developed, as well as a

variety of compatible units including a caddy for SPE cartridges and manifolds for splitting or collecting fluid handling lines.

Figure 5-8. IS2 sampler with peristaltic pump in its watertight shell. Ports in the shell provide fluid inlets, gas pressure relief, and electrical connections.

5.4.2 Peristaltic Pump Power and Control

Power and control for the peristaltic pump is provided by a Reglo-E Digital control unit (Figure 5-9). This unit provides motor power control via pulse-width modulation, and receives velocity feedback from an optical rotary encoder, with both signals transmitted using four channels of the electrical umbilical line. The transmission of both signals in an unshielded multichannel cable is not robust over very long cables, and crosstalk between the channels may affect the motor performance.

The control unit is calibrated with the pump before deployment in the field, and is capable of maintaining very low, nearly continuous flows (microliter per minute) or extremely low pulsed flows. The flow rate which is programmed for sampling is determined by the volume of water to be sampled, the time over which the composite sample is developed, the capacity of the sampler, and the expected aquifer flow rate through the well bore. In environments where the aquifer is very stagnant and communication with the surrounding media is poor, the flow rate through the device is expected to be held very low and/or the device will be operated in effluent capture mode. The pump control unit uses 120V-AC power provided by an inverter and two 12-V

batteries. The batteries, inverter, control unit, and the unused length of control cable are housed in a weatherproof container and constitute the surface package for the IS2 sampler (Figure 5-10).

Figure 5-9. IS2 peristaltic pump control unit. The control unit powers and controls the peristaltic pump in the sampler.

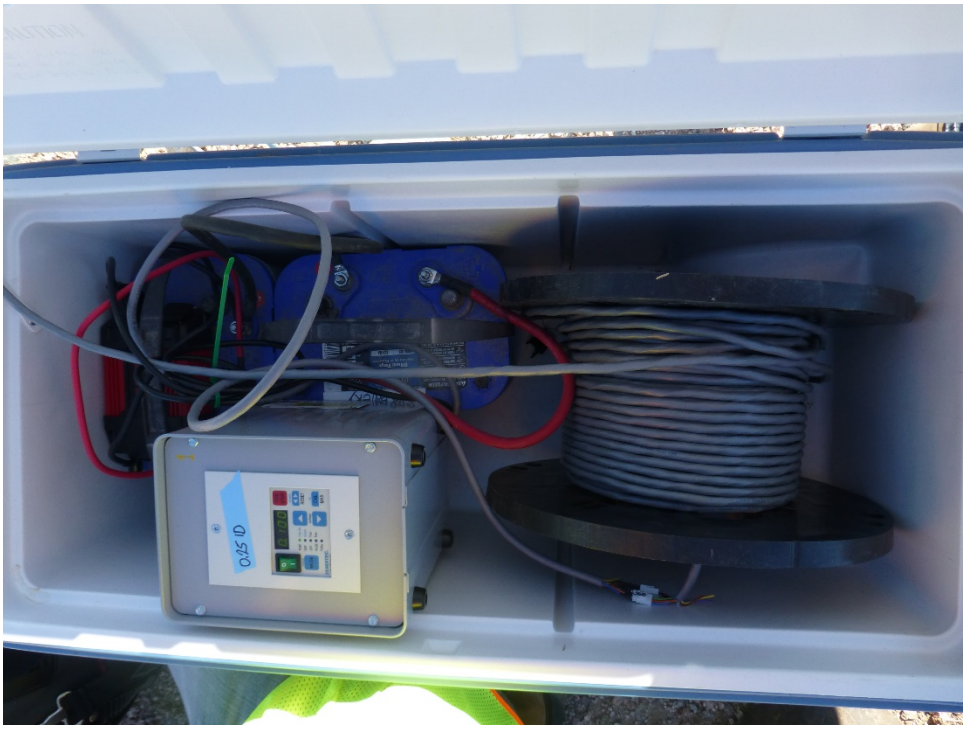

Figure 5-10. Field-prepared IS2 surface package for peristaltic pump sampler. Clockwise from upper left: 12-V battery pack and 120-V AC converter, control cable and controller.

5.4.3 Syringe Pump Sampling Unit

Sampling in effluent discharge mode is easily accomplished by the peristaltic pump, because very little pressure is required to move fluids through the IS2 when the inlet and outlet pressures are equal. However, when sampling in effluent capture mode at depth, the difference between the inlet pressure and the interior pressure of the IS2 can result in leakage through a peristaltic pump. In addition, the materials incorporated into a peristaltic pump (the pump tubing) may in some cases provide a loss mechanism for analytes through diffusion or sorption.

In order to meet these challenges, a reciprocating pump (Figures 5-11 and 5-12) which makes use of check valves was developed. The check valves incorporated in this system are selected to provide cracking pressures that are slightly higher than the head on the inlet of the pump, enabling the pump to effectively control the intake of water. The syringes used to drive fluids in this pump can be made of glass, providing a significantly more inert pathway than a polymer peristaltic pump tube. Trade-offs that come with this design include greater dead-volume within the fluid train, which may have implications for analytes prone to decomposition.

As a result of this redesign, the IS2 sampler with reciprocating pump also has a simpler control system that is both more adaptable and more tolerant of long control cables than the peristaltic pump system.

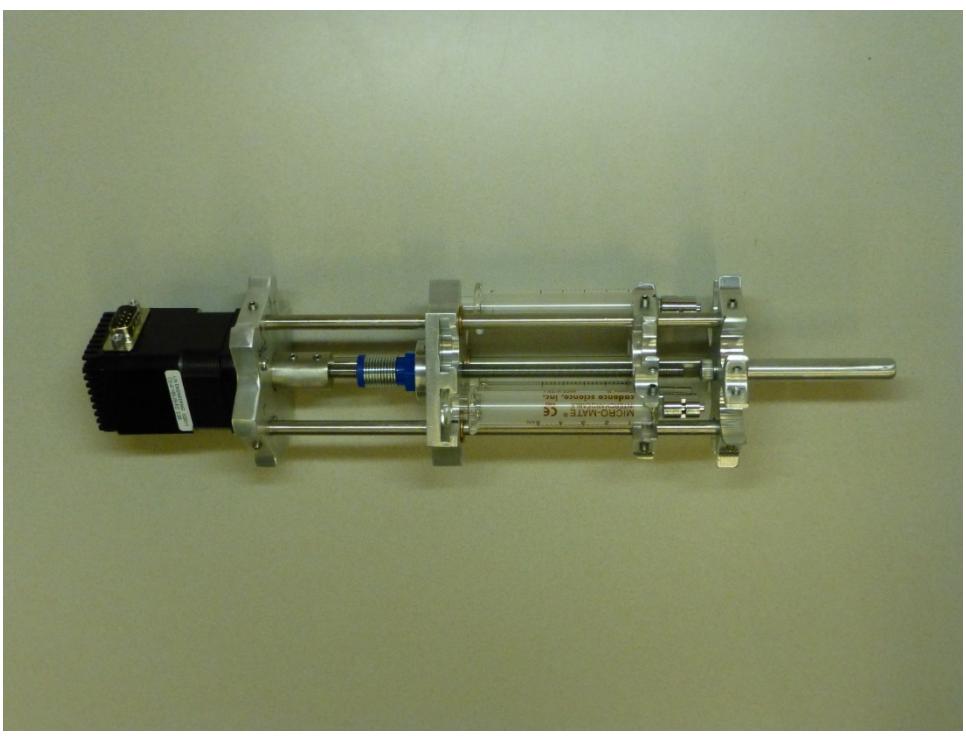

Figure 5-11. Six-channel reciprocating syringe pump developed for the IS2 sampler.

Figure 5-12. Field-prepared IS2 sampler with reciprocating syringe pump.

5.4.4 Reciprocating Pump Power and Control

The motor controller for the reciprocating pump is integrated into the motor itself. Control is accomplished by sending command strings from a portable computer to the motor using a standard RS-232 interface over the control cable. Power for the motor is provided by a 24-V DC battery pack. This system also uses four channels in the control cable (two for command, two for power). Unlike the peristaltic pump system, this control system is robust over very long cables and is not subject to interference between channels. Additional motors can be integrated into the unit without additional control cables or channels, as the RS-232 interface allows motors to be daisy-chained and addressed individually.

A software interface for programming the pump was developed by the team (Figure 5-13). The interface allows the pump to be calibrated and a variety of continuous or periodic pumping modes to be programmed. The surface package for an IS2 sampler with a reciprocating pump consists of two 12-V batteries comprising the 24-V battery pack, the USB-to-RS-232 interface, and the unused portion of the control cable in a weatherproof container (Figure 5-14).

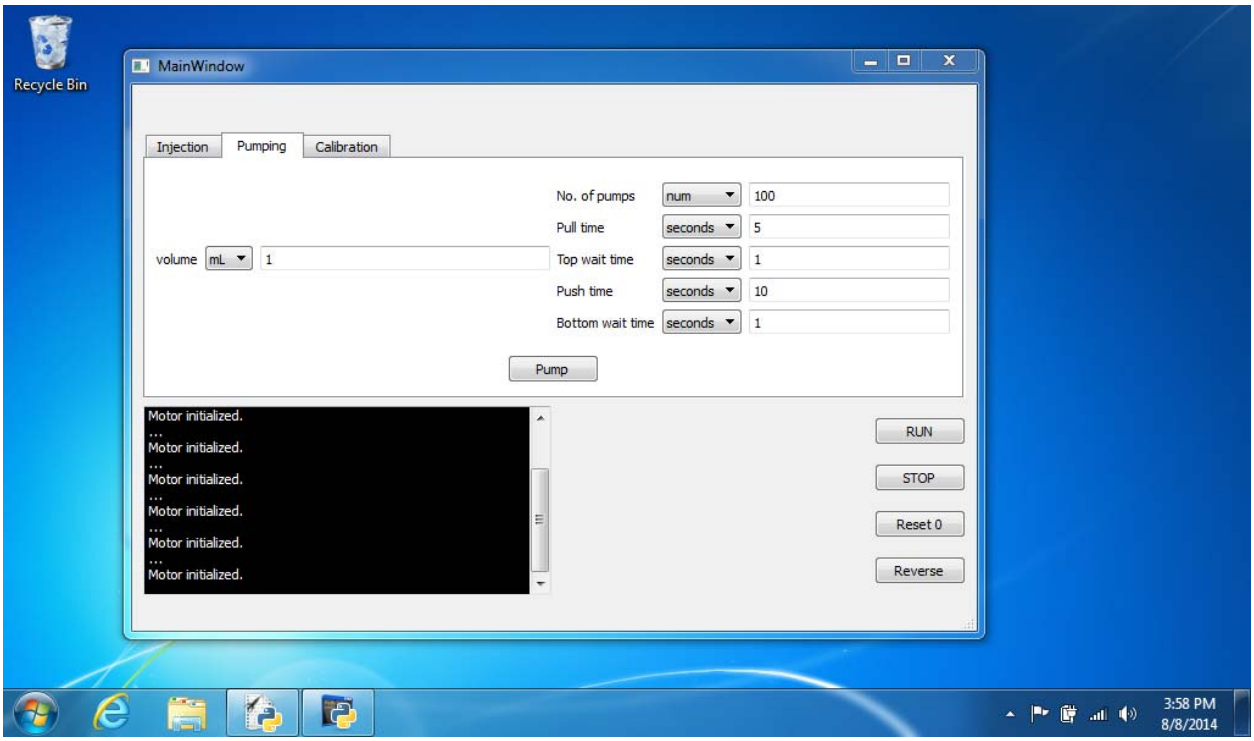

Figure 5-13. Screenshot of custom reciprocating pump control software.

Figure 5-14. Field-prepared IS2 surface package for reciprocating syringe pump.

5.4.5 Deployment Hardware

The sampler hangs in the well from a steel hanger, (Figures 5-5 and 5-15) that is designed to be easy to handle manually while impossible to drop into the well. High-test steel cable is used to connect the hanger to the sampler body, where it attaches to a heavy eye-bolt. When the instrument is inserted into the well manually to depths of more than 20 ft, a cable management pulley (Figure 5-16) is used by a second technician to guide the sampler into place.

Depending on the depth to water, the IS2 sampler can be inserted into a well manually or with the assistance of a crane (Figure 5-17). With the present embodiment, the team uses cranes for deployment to depths greater than 60 ft.

Figure 5-15. Hanger used to secure the sampler in a well.

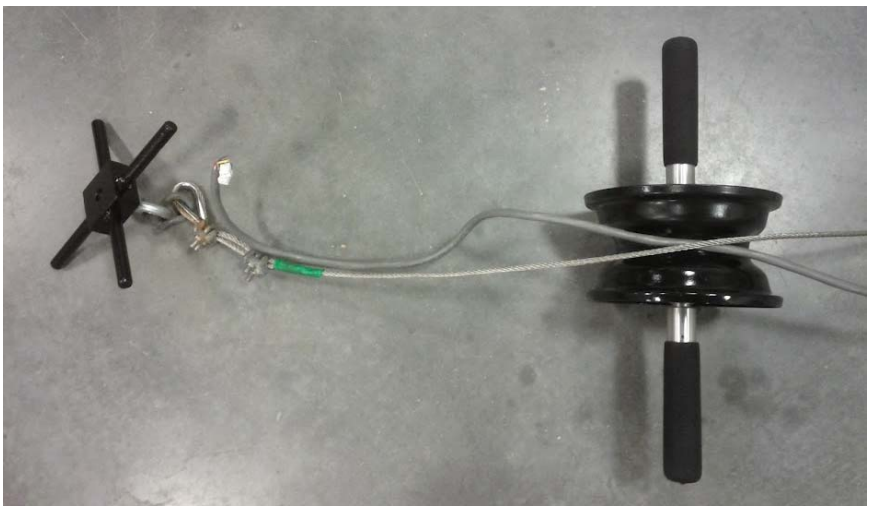

Figure 5-16. Hanger, steel cable, electrical cable, and cable management pulley for deployment of the IS2 sampler.

Figure 5-17. Installation and deinstallation of an IS2 sampler with a crane.

5.5 STANDARD PROCEDURES

A detailed Standard Operating Procedure (SOP) is provided in a separate document. Briefly, deployments of the sampling unit were accomplished in four phases:

(i) Preparation
(ii) Deployment
(iii) Operation
(iv) Recovery and Analysis

5.5.1 Preparation

Field trials of the IS2 system require preliminary work to prepare an SPE or SBSE method applicable to the site specific chemistry; trace contaminant detection can be confounded by many factors, including co-contaminants that prevent sorption of the analyte of interest by changing partitioning properties or by saturating the sorption sites. This pre-demonstration work was performed with grab samples of site groundwater before the sampler was deployed. Once the method is determined, the sampler and samples can be prepared.

A sample matrix is prepared to determine the number of quantification and quality assurance samples that will be used for the sampling event, and the appropriate sorbent cartridges are conditioned and made ready for loading into the sampler. Each sample is labeled with the date of sampling and a unique, consecutive number. Sample documentation consists of a field log book or chain-of-custody form in which the date, time, sample number, and processing volume of each sample is recorded.

Quality assurance samples include:

- Two sets of field samples in triplicate pre- and post-deployment.
- Six field samples for each demonstration deployment.
- One trip blank for each type of sample container or sorbent cartridge that is used.
- One field blank for each type of sample container or sorbent cartridge that is used.

Preparation for the sampler consists of the following:

(i) The tubing in the sampling unit is thoroughly cleaned or replaced, to prevent cross-contamination from other studies.
(ii) The pump is calibrated to ensure precise control of the cartridge loading.
(iii) Clean, conditioned sorbent cartridges are loaded into the sampling unit, and the unit is prepared for either effluent capture or effluent discharge.
(iv) The sampling unit is loaded into its deployment casing and all seals are tightened.

Additionally, a pumping program must be determined, which includes:

(i) The total volume to be dispensed and the total time of dispensation.
(ii) The mode of dispensation (continuous or pulsatile) and the specific parameters associated with the mode of dispensation (e.g., pulse length and flow rate).

5.5.2 Deployment

At the deployment site, a site-dependent well preparation procedure is observed that is largely dependent on the hydrogeological properties of the well. This procedure may include purging the well of a specific volume of water (e.g. the volume of the sampler, or the volume required to stabilize water parameters such as conductivity). In high-transmissivity formations, no purging may be necessary. The authors here suggest that the determination for purging requirements be made on the same basis as it would be made for other sampling methods.

The sampling unit is lowered into the well until the intake of the unit is at the desired sampling depth, typically within the screened interval of the well. Depth is selected by summing pre-cut lengths of steel retaining cable, typically in units of 20 ft.

For shallow depth insertion (less than 80 ft bgs), the entire length cable is assembled on the surface and lain out, with one end attached to the sampler and the other to the retaining hanger. The cable management system allows one technician to guide the sampler into the well while another technician safely lowers the sampler by walking in the retainer.

For deeper insertion (greater than 80 ft bgs), a crane (boom truck) is used to lower the sampler into the well by sequentially adding lengths of cable.

After insertion, a site-dependent equilibration time is observed, determined by the hydrogeological properties of the aquifer.

5.5.3 Sampling

After the period of equilibration, the control unit is activated and the sampling unit begins driving water through the sorbent cartridges. The time of the activation is noted.

5.5.4 Recovery

After the prescribed sampling period has passed, the control unit is deactivated. The sampler is removed from the well and decontaminated using a mild soap solution and a rinse with de-ionized water. The sampler is removed from its deployment case, and the sorbent cartridges are removed and capped or placed in individual vials, which are placed in a refrigerated container (e.g. insulated shipping box with ice).

5.5.5 Investigation-Derived Waste

Hazardous waste derived from this investigation includes used liquid handling tubing in the sampler, gloves and other soiled PPE, and the water used for decontamination of the instrument. All of this waste is disposed of as appropriate for the type of contaminant encountered at the site, in consultation with the site management and according to the hazardous waste management policies of ASU.

5.6 FIRST DEMONSTRATION: FORMER WILLIAMS AFB

The former Williams AFB was selected for the first demonstration of the IS2 sampler. Fuel components such as those present in the upper aquifer at ST-12, and particularly heavier constituents such as naphthalene, are a good target for a demonstration of the IS2 because they have favorable partitioning characteristics and mature techniques exist for separating and quantifying them. This demonstration was carried out using the peristaltic pump-driven sampler.

5.6.1 Preparation

In consultation with the site remediation contractor, two wells were selected as potential demonstration sites in the periphery of the plume: W11 and W36 (Table 5-4). Considerations included the expected concentration of fuel components, ease of access for the investigators, and type of instruments already deployed (e.g., water depth transducers). Both wells are in the upper, unconfined unit, approximately 250 ft deep and screened below 200 ft.

Table 5-4. Construction details for candidate wells at Former Williams AFB.

Well	Year Built	Diameter (in)	Depth to Screen (ft bgs)	Screen Length (ft)	Depth to Water (ft)
ST012-W11	1989	4	208	40	153 (2010)
ST012-W36	2010	4	210	35	156 (2012)

The site is impacted by a significant amount of LNAPL, which is present in many of the monitoring wells. A visit to the site to collect preliminary samples found LNAPL present in W11. The demonstration was therefore performed in W36, since it lies exclusively in the dissolved plume. If W36 had been rendered unavailable by remediation activities at the site, W11 could possibly have been substituted provided that care was taken to remove the free product as much as possible before introducing the IS2 sampler.

The primary analyte of interest at this site was naphthalene, a polycyclic aromatic hydrocarbon (PAH). Naphthalene is considered semivolatile, and the aromatic rings in this compound make it a good candidate for solid phase extraction with a styrene divinylbenzene (SDB). Two other common fuel components (Table 5-5) were identified from groundwater sampling data as secondary analytes of interest. Lighter and more volatile compounds would likely be more difficult to recover effectively than heavier and less volatile compounds. EPA methods 8260B and 8270C were selected for quantification of these compounds from liquid samples, and an SPE and gas chromatography-mass spectrometry (GC-MS) method (Appendix F) was developed by the project team for IS2 sampling and analysis.

The SPE cartridges chosen for this study (Table 5-6) contain 25 mg of an SDB resin housed between two frits in a 1 mL disposable syringe body. This resin mass was chosen because it was determined to have ample capacity for analyte capture beyond the quantity required for experiment, in order to provide a factor of safety in case the contaminant concentrations in the well had increased or the volume of water processed by the IS2 differed from the programmed value.

Table 5-5. Analytes of interest for IS2 demonstration at the former Williams AFB.

Analyte	CAS No.	MW	BP[1] (°C at 1 atm)	Log K_{OW}[1]
Ethylbenzene	100-41-4	106	136	3.21
Isopropylbenzene	98-82-8	120	152	3.56
Napthalene	91-20-3	128	222	3.45

[1]*Values predicted by the ACD/Labs Suite.*

Table 5-6. Sampling Matrix for IS2 demonstration at the former Williams AFB.

Wells	Analyte (Quantification Method)	Sorbent (Extraction Method)	Sample Type	Cartridge Quantity	Holding Time*
W-36	SVOCs by ASU GC-MS (Appendix F)	Strata SDBL, 1mL, 25 mg (Appendix F.1)	Quantification	3	14 days at 4 °C
			Breakthrough	3	
			Field Blank	1	
			Trip Blank	1	
			Method Blank	1	N/A
	VOCs by GC-MS (EPA 8260C)	N/A	40 mL VOA Vial	3	14 days at 4 °C
	SVOCs by GC-MS (8270C)	N/A	1 L Amber Bottle	2	14 days at 4 °C

**Maximum allowable holding time.*

Preliminary work was conducted with a benchtop IS2 sampling unit and grab samples of site groundwater to assess the methods and mechanism before field deployment. During this work, the material used for the internal plumbing of the sampler was tested and several poorly performing materials (*e.g.*,tygon and viton) were replaced with polytetrafluoroethylene (PTFE) for the liquid handling lines upstream of the sampling cartridges wherever possible.

Once the sampling and sample processing methods were considered ready, a sampling matrix was created for the demonstration (Table 5-6). The samples to be collected included those prepared by the IS2 sampler and a suite of liquid grab samples to be processed by a commercial laboratory for comparison. The demonstration was scheduled to occur shortly after a quarterly sampling event by the site restoration contractor, the methods (sampling by bladder pump and analysis by EPA methods 8260B and 8270C) and results of which were also provided to the ASU project team for comparison.

Before the sampling event, the sampling cartridges for the IS2 sampler were prepared according to the SPE method presented in Appendix F. Before delivering the sampler to the field site, the cartridges were loaded into the sampling mechanism. Three sampling channels were prepared, each loading a quantification cartridge in series with a breakthrough detection cartridges. A field

blank cartridge was loaded into the sampler but not connected to a liquid handling line. A trip blank cartridge was carried to the site but not loaded into the sampler. A method blank was retained at the laboratory and later loaded with deionized water to provide a method blank.

5.6.2 Deployment

The IS2 sampler was inserted (Figure 5-18) to 200 ft bgs (50 ft underwater). Due to the depth required to reach the target formation at this site, the project team elected to use a crane to assist with the deployment. The sampler was programmed to continuously dispense 250 mL over 24 hours.

Figure 5-18. Deployment of the IS2 sampler into W36 at the former Williams AFB, November 2013. Clockwise from left: 1) insertion of the sampler by crane, 2) the surface package being programmed, and 3) the deployment hanger on the well head.

The sampler was recovered and returned to the laboratory shortly after the control unit indicated that the dispensation had been completed. The recovery team observed a decontamination procedure that included:

- The use of nitrile gloves when handling surfaces that had been in contact with contaminated water
- Decontamination of the sampler with a dilute soap and water solution
- Hand-washing
- Disposal of all waste according to the ASU hazardous waste management guidelines

The sample cartridges were removed from the sampler, capped to retain the entrained fluid, and refrigerated before being extracted (Appendix F). The volume of water collected in the storage bag for each channel was determined gravimetrically and recorded.

After allowing the well to equilibrate for another day, a disposable bailer was used to collect the liquid samples (Table 5-6), which were immediately returned to a commercial laboratory for analysis.

5.6.5 Results

The volume of water dispensed per channel was greater than expected (Table 5-7), particularly for channel 3. This was a significant concern, as the sampler is intended to be used in some cases without effluent capture, and inaccurate dispensation would significantly affect the results generated in those cases. This source of this dispensation error was investigated, as a number of conditions can result in poor accuracy including pump wear, communication problems via the control line, overpressure of the inlet, and initial calibration error.

Table 5-7. Fluid volume dispensed by the IS2 peristaltic pump.

Channel	Programmed (mL)	Dispensed (mL)	% Deviation
1	250	285	14
2	250	268	7.2
3	250	470	88
Avg. (Std. Dev.)	-	341 (±112)	36 (±44)

Overpressure of the inlet was determined to be the problem through testing in the pressure chamber (Section 2.2.1). The inlet pressure was varied over the range of pressures that the submersible would have experienced during the deployment and it was determined that pressure as low as 5 psi (approximately 12 ft of head) could cause leakage of the pumps. While this would not be a problem in a flow-through system (*i.e.* one where the inlet and outlet of the pump are at equal pressure, as on the surface), this conclusion lead directly to a redesign of the pump system to improve tolerance of inlet overpressure, through the application of a reciprocating pump with check valves.

After elution, the concentration of concentrations of naphthalene, ethylbenzene, and isopropylbenzene in the eluate were determined by GC-MS. It was noted that the concentration of the analytes in the breakthrough cartridges was below the limit of detection, indicating that the quantification cartridge had sufficient capacity to collect all of the analyte mass without breakthrough. The quality control cartridges were also noted to contain no detectable concentration of the analytes (Figure 5-19).

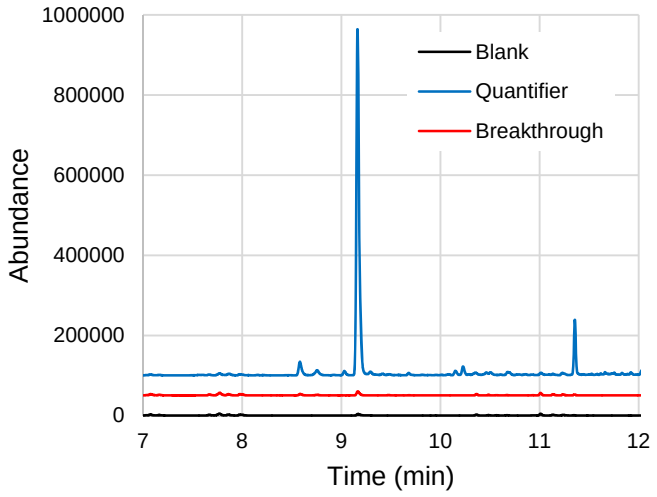

Figure 5-19. Gas chromatograms for naphthalene recovered from quantification and breakthrough cartridges. No breakthrough was indicated.

For all of the analytes, a reporting limit was determined by multiplying the lowest calibrated concentration for the analyte by the ratio of the prescribed volume of the eluate (2 mL) to the prescribed volume of water programmed for the channel (250 mL). With the lowest calibrated concentration for all three analytes being 10 µg/L, the reporting limit for the IS2 is conservatively estimated at approximately 0.1 µg/L for this study. Compared to the reporting limits provided by the commercial labs which analyzed liquid samples, this is a significant improvement of between 1 and 2 orders of magnitude (Table 5-8, Figures 5-20 and 5-21).

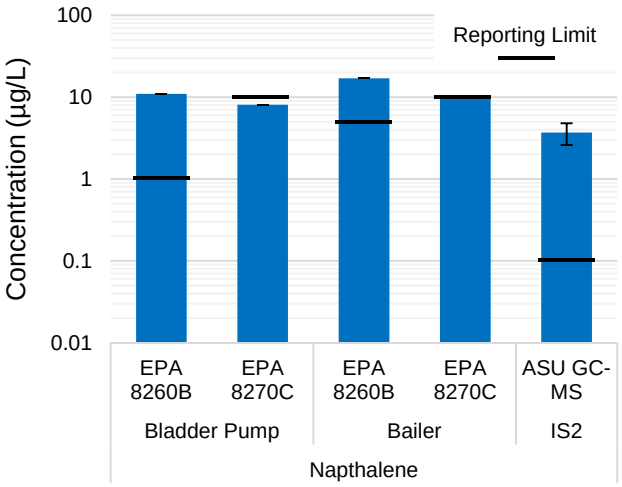

Figure 5-20. Concentrations and reporting limits of naphthalene reported in demonstration well using samples generated by a bladder pump, a bailer, and the IS2, and analysis by EPA methods 8260B, 8270C, and the ASU GC-MS method.

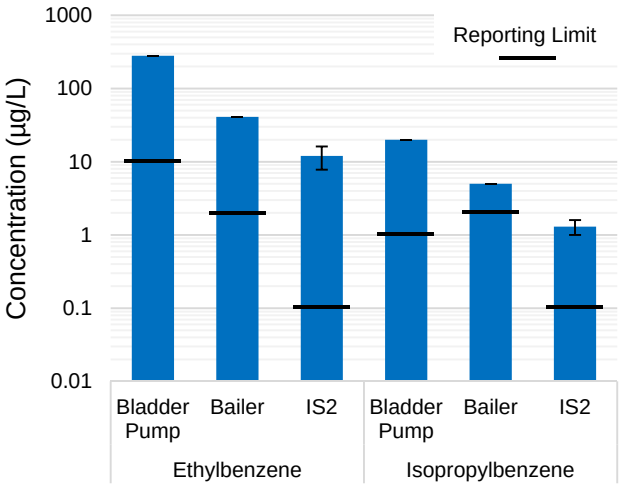

Figure 5-21. Concentrations of ethylbenzene and isopropylbenzene reported in demonstration well using samples generated by a bladder pump (by EPA 8260B), a bailer (by EPA 8260B), and the IS2 (by the ASU GC-MS method).

Table 5-8. Reporting limits for discrete and composite sampling of naphthalene.

Sampling Method	Species	Quantification Method	Reporting Limit
Liquid Grab Sample (40 mL)	Naphthalene	EPA 8260B[a]	1.0 – 5.0 µg/L
Liquid Grab Sample (1 L)	Naphthalene	EPA 8270C[a]	9.5 – 10.0 µg/L
IS2 sorbed sample, 24-hr composite (250 mL pre-concentrated on 500 mg resin; eluted to 2 mL)	Naphthalene	ASU GC-MS[b]	0.10 µg/L

[a]Reporting limit based on results from a certified laboratory, [b]Reporting limit generated by the IS2 team at ASU.

The concentration of the primary analyte of interest, naphthalene, reported by the IS2 and the ASU GC-MS method was observed to be within an order of magnitude of that reported by samples generated by the bladder pump and the bailer, and analyzed by EPA methods 8260B and 8270C. As expected, the reported values of the more volatile ethylbenzene and isopropylbenzene were lower. However, it should be noted that there are many inconsistencies between the methods that could drive these differences, including the date of sample collection, the depth of sample collection (Table 5-9), the use of a 24-hour composite sample vs time-discrete sampling, material differences between the samplers, and handling techniques of the different sampling teams.

Table 5-9. Sampling depths and depth of screen at demonstration well.

Method	Depth to Screen (ft bgs)	Sampling Depth (ft bgs)
Bladder Pump	210	215
Bailer		155
IS2		200

While the recovery of the IS2 technique could likely be improved, the differences between techniques and the natural variation in concentration between sampling events make direct comparison of concentrations a challenge, and we note that for concentrations below the reporting limit of the other techniques, the IS2 should have a significant advantage.

5.7 SECOND DEMONSTRATION: NAS NORTH ISLAND

5.7.1 Preparation

Two candidate wells were identified from documents provided by the site management (Table 5-10). Considerations included placement in the dilute fringe of the chromate plume (>100 μg/L). Well OU20-PEW-01 typifies the location and construction of a candidate well. This well is located on the southwest edge of the plume, in the parking lot located between buildings 2 and 94, and marked in Figure 4-4 with a red circle. This well was also the subject of an investigation performed under ER-200914 (Halden, 2012), and as a result of that investigation it was identified as a candidate for sampling with the IS2. During that experiment, the well was found to be appropriately sized for the IS2 sampler, outside and up-gradient of previously-conducted field pilot-tests, and in a location minimally disruptive to traffic and logistically easy to access.

A second candidate well, S1-MW-09, was identified and proposed as an alternative, due to lower contaminant concentrations. After a visit to the site, well S1-MW-09 was selected for the demonstration, primarily because it is located near a painted island in the parking lot, facilitating placement of equipment without interfering with traffic (Figure 5-6).

Table 5-10. Construction details for candidate wells at NASNI.

Well	Year Built	Diameter (in)	Depth to Screen (ft bgs)	Screen Length (ft)	Depth to Water (ft)	Chromate Conc. (mg/l, year)
OU20-PEW-01	2006	4	25	10	5 (2006)	25 (2012)
S1-MW-09	NA	4	9	10	4 (2014)	0.25 (2013)

This site is impacted by commingled plumes of hexavalent chromium (present as chromate) and chlorinated solvents, largely trichloroethylene (TCE). During a preliminary visit to the site, an Isco 3700 (Teledyne Isco, Lincoln, Nebraska) sequential portable sampler was deployed to take 1-L samples at two hour intervals, in order to provide baseline data for the IS2 demonstration. These samples were collected from 15 ft bgs, the same depth at which the IS2 would sample. The average concentrations of relevant anions, hexavalent chromium, and TCE (from site documentation) are presented in Table 5-11. Observations were also made of the depth to water in the well, and local tide data was collected from the National Oceanic and Atmospheric Administration (NOAA) database for the San Diego observatory (Station 9410170).

Table 5-11. Concentrations of analytes relevant to the IS2 demonstration at NASNI.

Analyte	Concentration	Method	Date Measured
Chloride	21 mg/L	EPA 300.0	November 2014
Sulfate	32 mg/L	EPA 300.0	November 2014
Nitrate	3.2 mg/L	EPA 300.0	November 2014
Chromium-VI	1.2 mg/L	SM 3500 CR D	November 2014
Trichloroethylene	6.6 µg/L	NA	July 2013

The depth to water in S1-MW-09 was always observed to be 4.1 ft, which suggested that this location was outside of the influence of the tide. However, when the chromium-VI concentration in the well is plotted on the same time axis as the tidal data (Figure 5-22), it is clear that tidal action is influencing the groundwater at this location, and is responsible for swings in the chromate concentration of up to 0.5 mg/L (± approximately 50% from average). This provides a good example of a location where time-discreet and time-averaged measurements could provide significantly different data.

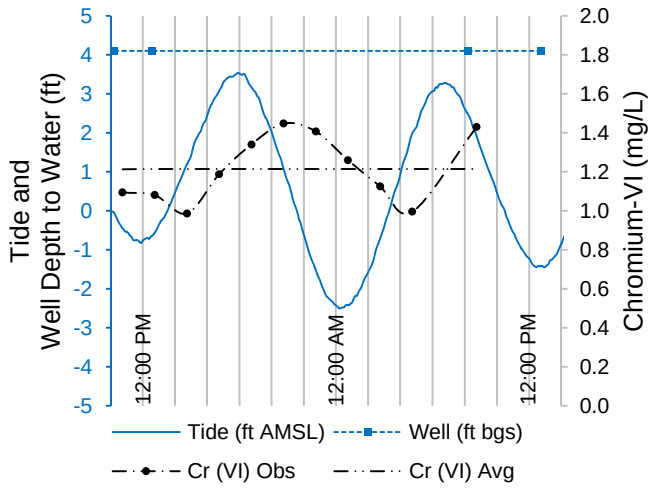

Figure 5-22. Tide, depth to water, and contaminant concentration data for well S1-MW-09 over a 24-hour time period. The contaminant concentration is observed to follow the tide.

The SPE cartridges selected for this study contain 1.0 g of SIR-100-HP (ResinTech, West Berlin, New Jersey) strong base anion resin. This resin has demonstrated good affinity and high capacity for chromate in the presence of other salts including chloride (Bowen, Westerhoff, Hristovski, & Halden, 2014). During preliminary work in the laboratory (Appendix G), the resin provided recovery of over 80% from both deionized water and contaminated site groundwater, and enough capacity to process more than 400 mL of site water per cartridge without breakthrough.

The sampler was configured with a reciprocating syringe pump driving six fluid channels. Three of these channels included a single SPE cartridge. The fluid from all six channels was collected in inert polymer bags. Breakthrough, which was not anticipated, would be detected in the

effluent from the cartridges. The sampler was programmed to take in 1.25 mL of water every second hour, process it at 0.5 mL/min, and pause until the next sampling period. Twenty-eight days of sampling every two hours would process a total of 420 mL of groundwater.

For this demonstration, the sampler was inspected after the first, second, and fourth weeks to ascertain its function and collect liquid samples. The collected water was recovered for analysis and the internal mechanism of the sampler inspected for faults.

5.7.2 Deployment

The IS2 sampler was inserted into the well, with an inlet positioned at 15 ft bgs (11 ft under water) (Figure 5-23). For this shallow deployment, the sampler was installed and deinstalled manually. The sampler was programmed to take in 1.25 mL of water every second hour, process it at 0.5 mL/min, and pause until the next sampling period. Twenty-eight days of sampling every two hours would process a total of 420 mL of groundwater.

Figure 5-23. Field assembly and installation of the IS2 at NASNI.

The maintenance and recovery team observed a decontamination procedure that included:

- The use of nitrile gloves when handling surfaces that had been in contact with contaminated water
- Decontamination of the sampler with deionized water
- Hand-washing
- Disposal of all waste according to the ASU hazardous waste management guidelines

After the fourth week of sampling, the sample cartridges were removed from the sampler, capped to retain the entrained fluid, and refrigerated before being extracted (Appendix G). The volume of water collected in the storage bag for each channel was determined gravimetrically and recorded.

5.7.3 Results

The volume of water processed by the sampler is a particularly important parameter. The ultimate embodiments of this system in a production environment would be operated in effluent discharge mode, which requires confidence in the predicted sample volumes to provide confidence in the calculated average contaminant concentration. The experimental device used in this demonstration has many adjustable parts which would likely be non-adjustable in a production system. To ensure accurate dispensation for this experiment, the sampler pump was adjusted after the first week of operation (Figure 5-24), and a significant improvement in performance was observed after the second week. This resulted in the equipment being left in place for the remainder of the experiment without adjustment.

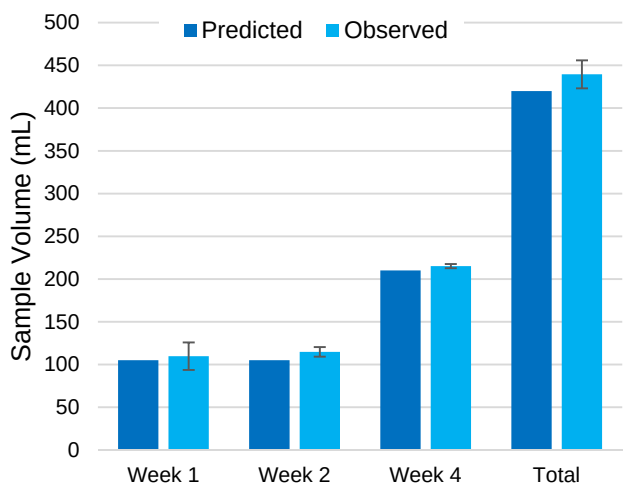

Figure 5-24. Predicted and observed volumes of water processed by the IS2 sampler during the demonstration at NASNI.

All of the liquid samples (post-cartridge effluent and unprocessed composite samples) were analyzed for chromate and total chrome. Chromium was not detected in any of the post-cartridge effluent samples, indicating that there had been no detectable breakthrough during sampling. A comparison of the total chrome and chromate data suggests that the majority of the total chrome

was present as chromate (Figure 5-25), which further indicated that there was no significant change in speciation between the sorbed and liquid composite samples. For consistency, total chrome data is presented subsequently.

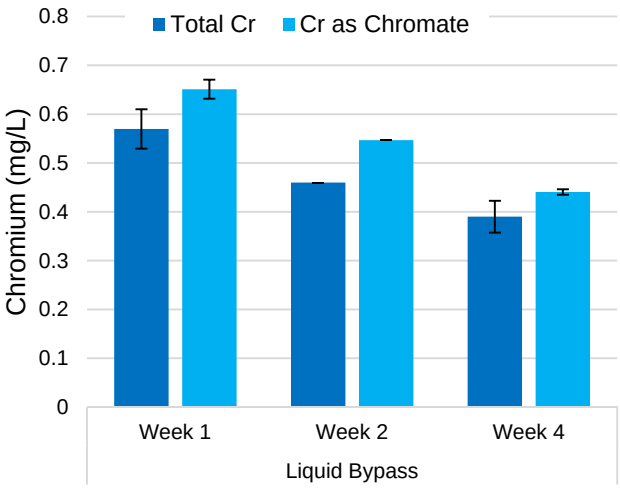

Figure 5-25. Speciation of chromium observed in the liquid bypass channels.

Upon recovery after 28 days, the cartridges were eluted twice and the eluates similarly analyzed. It was observed that the recovery from elution was lower than expected (approximately 55% of the value observed in the bypass samples), so the resin was destructively tested using EPA methods 3050B and 6010B. The results improved the recovery to approximately 77% of the value observed in the bypass samples (Figure 5-26), which meets performance objective 31 and the EPA recommended recovery of 70% to 130%.

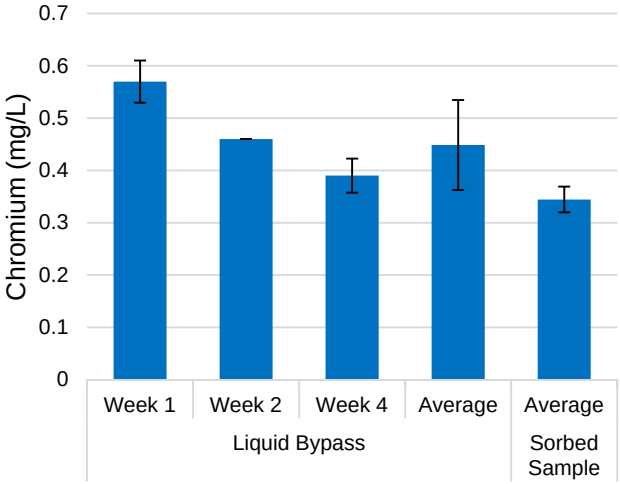

Figure 5-26. Concentrations of chromium reported by 7 and 14-day liquid composite sample and a 28-day sorbed composite sample.

The elution recovery for field deployment was lower than that observed in bench studies, likely due to diffusion of the target species into the resin matrix. These results indicate that very long time averages can be collected for metal species where speciation is not a concern, as the sampling plan can call for the resin to be destructively tested with good results. For situations where metal speciation is a concern and the anions must be recovered through elution, shorter time averages are recommended, to reduce losses of analytes. This method still allows for time averages to be conducted on significantly longer time scales than the short-term tidal fluctuations.

As in the first demonstration, the IS2 enabled lower reporting limits for the sampling method than liquid grab sampling. This is due to the preconcentration process, by which the accumulated mass in the SPE cartridge can provide detectable quantities even when the environmental concentration cannot. Using the results of the demonstration method, a selection of reporting limits is provided in Table 5-12.

Table 5-12. Reporting limits for discrete and composite sampling of chromium-VI.

Sampling Method	Species	Quantification Method	Reporting Limit (mg/L)
Liquid grab sample (400 mL)	Total Cr	EPA 200.7[a]	0.01
	Cr (VI)	SM 3500 CR D[a]	0.05
	Cr (VI)	EPA 7196A[b]	0.1
IS2 sorbed sample, 1-week composite (400 mL pre-concentrated on 1.0 g resin; elute to 50 mL)	Total Cr	EPA 200.7[a]	0.001
	Cr (VI)	EPA 7196A[b]	0.01
IS2 sorbed sample, 4-week composite (400 mL pre-concentrated on 2.0 g resin; resin acid digested)	Total Cr	EPA 3050B and EPA 6010B[a]	0.01

[a]Reporting limit based on results from a certified laboratory, [b]Reporting limit generated by the IS2 team at ASU.

6.0 PERFORMANCE ASSESSMENT

A summary of all data analysis in support of the assessment of performance objectives is provided in the following section.

6.1 DEMONSTRATE AGREEMENT WITH CURRENT METHODS

This quantitative performance objective requires IS2 to demonstrate agreement with current sampling and analysis methods. The original performance objective required measurements within 30% of the values obtained by co-analysis.

6.1.1 Supporting Data

Table 6-1 is a summary of the results of IS2 sorbed-sample analysis and co-analysis of liquid samples at the two demonstration sites, as well as the percent difference between the methods.

Table 6-1. Summary of contaminant quantification data for two demonstrations.

Demonstration	Sample	Result	Difference (%)
First Demonstration: Former Williams AFB	Naphthalene discrete liquid sample by bladder pump (8260B)	11 µg/L	--
	Naphthalene discrete liquid sample by bailer (8260B)	17 µg/L	--
	Naphthalene composite solid sample by IS2, uncorrected for recovery	3.7 µg/L	67 – 78
	Naphthalene by IS2, corrected for recovery (70%)	5.3 µg/L	52 – 69
Second Demonstration: NAS North Island	Chromium-VI liquid composite sample	0.45 mg/L	--
	Chromium-VI solid composite sample by IS2, uncorrected for recovery	0.34 mg/L	24
	Chromium-VI solid composite sample by IS2, corrected for recovery (80%)	0.43 mg/L	4.4

6.1.2 Performance Assessment

The performance of the IS2 for the proposed fuel contaminant (naphthalene) at the Former Williams AFB was below expectation, but the difference was of not much more than the difference observed between the results of two other sampling and analysis methods (maximum difference = 9 µg/L, standard deviation = 3.8).

There were a number of confounding factors that made direct comparisons difficult at the first demonstration site. The depths of the three sample methods were different, the samples were taken on different days, and two discrete methods were compared with a time-averaged method. Naphthalene and the secondary analytes are prone to losses in a system that includes plastic components. Additionally, it was not feasible at the time of the demonstration to align all of the sampling logistics between the three methods, so the bailed and IS2 samples were performed in an undisturbed well, while a low-flow purge was performed prior to taking the bladder pump sample. The bladder pump sample was taken by a different team, and the samples were processed by three different laboratories. Refinement of the IS2 method, coupled with comparison sampling better matched to the IS2 sampling conditions (e.g. depth), may potentially improve comparability.

At the second demonstration site, the results were significantly closer; a statistical analysis is provided in Section 6.2. Without correcting for the known recovery of the analyte, the sorbed sample yielded a concentration only 24% less than the liquid composite sample. When corrected for recovery, this difference fell to 4.4%. The excellent performance at this demonstration can be attributed to the robust SPE method and the non-volatile, conservative properties of the metal anionic analyte, and significantly to the ability for the IS2 instrument to collect split liquid and sorbed composite samples that.

It is clear from Figure 5-27 that had the liquid sample been collected one week and the composite sample the next, the difference between the results would have been much larger. A comparison was not, for example, made between the IS2 results and the results of the 24-hour discrete survey, where the average concentration was nearly three times what the IS2 sorbed samples reported. This was an indication that short- and long-term changes in concentration make it difficult to compare samples that were not taken simultaneously.

This quantitative performance objective has been met.

6.2 DEMONSTRATE TIME-AVERAGED SAMPLING CAPABILITY

This quantitative performance objective requires the IS2 to demonstrate agreement between a liquid composite sample and a solid-phase composite sample. The original performance objective required agreement to be demonstrated using Student's *t*-test.

6.2.1 Supporting Data

Tables 6-2, 6-3, and 6-4 are present a summary of the statistical data generated to support this performance objective.

Table 6-2. Samples and concentration values use for statistical comparison of liquid and solid composite sampling results. Two points (Week 2 for Channels 1 and 3) were lost in handling.

Sample Set	Sample Name	Chromium-VI Concentration (mg/L)
Liquid Composite Samples	Channel 1 Week 1	0.59
	Channel 2 Week 1	0.61
	Channel 3 Week 1	0.52
	Channel 2 Week 2	0.46
	Channel 1 Week 4	0.39
	Channel 2 Week 4	0.35
	Channel 3 Week 4	0.43
Solid-Phase Composite Samples (Uncorrected)	Channel 4 Week 4	0.32
	Channel 4 Week 4	0.38
	Channel 4 Week 4	0.34

Table 6-3. Results of F-Test for the equality of variances of liquid and solid composite sample results. Statistics generated by Microsoft Excel.

	Liquid Composite Samples	Solid-Phase Composite Samples
Mean	0.479	0.345
Variance	0.00975	0.000895
Observations	7	3
Degrees of Freedom	6	2
F	10.9	
P(F<=f) one-tail	0.0865	
F Critical one-tail	19.3	

Table 6-4. Results of *t*-Test for the equality of means of liquid and solid composite results. Statistics generated by Microsoft Excel.

	Liquid Composite	Solid-Phase Composite
Mean	0.479	0.345
Variance	0.00975	0.000895
Observations	7	3
Pooled Variance	0.00753	
Hypothesized Mean Difference	0	
Degrees of Freedom	8	
t Stat	2.23	
P(T<=t) one-tail	0.0280	
t Critical one-tail	1.86	
P(T<=t) two-tail	0.0560	

t Critical two-tail	2.31

6.2.2 Performance Assessment

As indicated in Section 6.1.2, the results generated by sorbed and liquid composite samples were quite similar, with the sorbed samples reporting 24% lower than the liquid composite samples before being corrected for recovery, and reporting only 4.4% lower after being corrected for recovery.

Though the number of samples available for statistical analysis is relatively low, a simple analysis of the variance and means has been prepared. The samples included in the analysis are presented in Table 6-2. The sorbed sample results were taken without correction for recovery, to provide a more conservative test. The Week 2 samples for Channels 1 and 2 were lost in the field, and so are not presented.

The first analysis performed was an F-test. The null hypothesis was that the sample variances are equal. The F-statistic calculated from the samples (Table 6-3) is less than the critical F-value, so the null hypothesis is accepted and the variances cannot be assumed to be different.

The second analysis performed was a *t*-test. The null hypothesis was that the sample means are equal. The *t*-statistic generated from the samples (Table 6-4) is between the critical one-tail and two-tail *t*-values, so the null hypothesis is accepted and the means are assumed to be equal, at a significance level of up to 0.056.

This quantitative performance objective has been met.

6.3 DEMONSTRATE OPERABILITY UNDER ENVIRONMENTAL CONDITIONS

This quantitative performance objective requires the IS2 to demonstrate equivalence between the volume of water processed by the solid-phase cartridge and the programmed volume of water. The original performance objective requires agreement to be demonstrated using a *t*-test. The demonstration is further considered successful if there is no more than 30% difference between the concentration results obtained from solid-phase composite samples and liquid composite samples.

6.3.1 Supporting Data

A *t*-test is not practical for this application as originally described, because the variance in the predicted values is zero. Instead, a *t*-test was performed to determine whether or not the data support a hypothesis that the mean volume of water pumped through the SPE cartridges is equal to the mean volume of water pumped directly to storage for the liquid composite sample. While the number of data points is still impractically small, this was done to further address the early concern that SPE cartridges may become fouled during environmental use, reducing fluid flow. The volumes used for the analysis were those measured between weeks 2 and 4 of the NASNI deployment. The results are presented in Table 6-5.

Supporting data regarding the difference between the concentration results derived from solid-phase and liquid composite samples is presented in Sections 6.1 and 6.2.

Table 6-5. Results of *t*-Test for the equality of mean volumes of water collected for liquid and solid composite results. Statistics generated by Microsoft Excel.

	Liquid Composite	Solid-Phase Composite
Mean	216.3	213.8
Variance	9.97	0.703
Observations	3	3
Pooled Variance	5.34	
Hypothesized Mean Difference	0	
Degrees of Freedom	4	
t Stat	1.31	
P(T<=t) one-tail	0.131	
t Critical one-tail	2.13	
P(T<=t) two-tail	0.261	
t Critical two-tail	2.78	

6.3.2 Performance Assessment

The null hypothesis of the statistical assessment for the first part of this objective was that the sample volume means are equal. The *t*-statistic generated from the samples (Table 6-4) is between the critical one-tail and two-tail *t*-values, so the null hypothesis is accepted and the means are assumed to be equal, though at a very low significance level of 0.26. This analysis is not very strong, due to the limited number of comparable samples available. However, it is supported by other data, including the preliminary flow data presented in Section 5.3.1. At present there is no indication that SPE cartridges are subject to unacceptable fowling or obstruction that would preclude their use in sampling wells.

The second part of the objective required a demonstration of results derived from sorbed samples that are no more than 30% different from liquid composite samples; this data was provided in Section 6.1 with an accompanying statistical analysis in Section 6.2, and the demonstration at NASNI was successful.

This quantitative performance objective has been met.

6.4 DEMONSTRATE FAVORABLE LABOR REQUIREMENTS

This qualitative performance objective requires that the complexity of operating the IS2 system be acceptable when compared to other water sampling techniques. Personnel associated with IS2 demonstrations were asked to give their subjective analyses of the practicality of the IS2 in this context.

6.4.1 Supporting Data

In discussion with the team members, there was consensus that approximately one hour was required to install or deinstall the device, including staging of equipment, safety precautions for

traffic areas, recording well parameters such as depth to water, checking the device function and preparing it for the well, inserting or removing the device, decontamination of the device upon removal, and cleanup.

6.4.2 Performance Assessment

While the IS2 sampler requires some preparatory work, the consensus of the team is that the requirements are qualitatively similar or not much greater than the preparation required for other mechanical sampling devices (e.g., bladder pumps). Additionally, while deep insertion (>100 ft) requires the use of a crane, the team found that installation and deinstallation at all depths takes approximately an hour, and is qualitatively similar to sampling with other mechanical sampling devices.

This qualitative performance objective has been met.

6.5 DEMONSTRATE UTILITY OF IS2's LOW MDLs

This qualitative performance objective requires the IS2 to demonstrate improvement in MDL. The original performance objective describes two goals: improving MDLs in a well where contaminants are detectable but not quantifiable, and detecting contaminants in a well where contaminants are not quantifiable but expected to exist at trace quantities.

6.5.1 Supporting Data

It was not possible to follow the original requirements of this performance objective, as many other well selection factors limited the number of wells appropriate for demonstration. These included accessibility, security, traffic concerns, well design, and other considerations. However, the demonstrations that were performed produced data that supports a claim that the IS2 method improves the resolution of groundwater sampling. Specifically, the improvements in reporting limit (RL) that were observed are collected Table 6-6.

Table 6-6. Sampling methods and reporting limits from two demonstrations of the IS2.

Sampling Method	Species	Quantification Method	Reporting Limit
Liquid Grab Sample (40 mL)	Naphthalene	EPA 8260B[a]	1.0 – 5.0 µg/L
Liquid Grab Sample (1 L)	Naphthalene	EPA 8270C[a]	9.5 – 10.0 µg/L
IS2 sorbed sample, 24-hr composite (250 mL pre-concentrated on 500 mg resin; elute to 2 mL)	Naphthalene	ASU GC-MS[b]	0.10 µg/L
Liquid grab sample (400 mL)	Total Cr	EPA 200.7[a]	0.01 mg/L
	Cr (VI)	SM 3500 CR D[a]	0.05 mg/L
	Cr (VI)	EPA 7196A[b]	0.1 mg/L
IS2 sorbed sample, 1-week composite (400 mL pre-concentrated on 1.0 g resin; elute to 50 mL)	Total Cr	EPA 200.7[a]	0.001 mg/L
	Cr (VI)	EPA 7196A[b]	0.01 mg/L
IS2 sorbed sample, 4-week composite (400 mL pre-concentrated on 2.0 g resin; resin acid digested)	Total Cr	EPA 3050B and EPA 6010B[a]	0.01 mg/L

[a]Reporting limit based on results from a certified laboratory, [b]Reporting limit generated by the IS2 team at ASU.

6.5.2 Performance Assessment

While the specifically proposed tests were not logistically feasible for this project, the demonstration data support the original project objectives, namely that:

a. The IS2 method provides concentration data that is detectable and quantifiable at lower concentrations than methods that do not perform *in situ* preconcentration.
b. The IS2 has the potential to provide detection in wells where the concentration would be below detection limits for other methods.

This qualitative performance objective has been met.

6.6 DEMONSTRATE REDUCED GENERATION OF HAZARDOUS WASTE

This qualitative performance objective required the IS2 to demonstrate a lower rate of generation of hazardous waste than other water sampling methods.

6.6.1 Supporting Data

All sampling methods generate some hazardous waste: used gloves, consumables (pump tubing, pump bladders, etc.), water or other liquids used for decontamination and hand washing. Some particularly waste-intensive groundwater sampling processes, such as well purging, are not

necessarily appropriate for comparison, as the decision to purge and the purging regime should be dictated by the site hydrogeological properties (Barcelona et al., 2005). At present, no-purge operation of the IS2 is indicated anywhere that passive sampling would otherwise be indicated. In either case, while the IS2 is capable of reducing purge waste by operating in no-purge settings, the advantage is not unique.

Logistical considerations during the demonstrations led to commingling of other hard and liquid wastes, so the demonstrations did not provide adequate evidence to support any conclusions about the relative amount of waste generated during sampling. Observation of the demonstrations suggest that an IS2 sampling event generates similar quantities of hazardous waste to other sampling methods.

6.6.2 Performance Assessment

At present, there is not enough data to support a conclusion that the IS2 has a lower rate of generation of hazardous waste than other sampling methods.

6.7 DEMONSTRATE FAVORABLE COST ECONOMICS

This performance objective requires the IS2 to demonstrate per-sample costs comparable to those expected for sampling with other methods.

6.7.1 Supporting Data

The cost assessment (Section 7.0) provides an analysis of the costs associated with IS2 sampling, and provides some estimates of comparable costs for other instruments. Broadly, the per-sample costs of the IS2 are similar to other methods, with potential savings in shipping and sample handling costs. A summary is presented in Table 6-7, and the actual costs associated with the demonstrations are presented in Appendix J.

Table 6-7. Cost elements for groundwater sampling and qualitative analysis of the relative cost of the IS2 method.

Per-Sample Cost Element	IS2 Sampling versus Other Methods
Consumables (gloves, pump tubing, etc.)	Similar
Labor (technician time)	Similar or slightly worse
Sample Handling (size, weight, shipping)	Better; advantage grows with number of samples
Analysis (laboratory costs)	Similar
Labor (shallow sampling, <100 ft bgs)	Similar
Labor (deep sampling, >100 ft bgs)	Worse

6.7.2 Performance Assessment

Simultaneous analyses using the IS2 and other techniques were performed; additionally, the IS2 team has experience taking samples with other instruments, providing baseline samples for this

and other studies. The IS2 was broadly similar in cost to other methods, with logistical advantages in sample volume and mass versus liquid samples, and additional costs (crane rental) when extremely deep samples are taken. The IS2 provides unique data, however, and with additional future demonstrations the advantages and disadvantages may be shown to offset.

This performance objective has been met.

7.0 COST ASSESSMENT

Cost is a fundamental driver in the development of *in situ* sample preparation technology. Anticipated cost benefits include reductions in:

- Consumables use and disposal costs
- Packaging and shipping costs for prepared samples
- Handling and disposal of contaminated water
- Analytical labor cost

The IS2 technology demonstration provided an opportunity to generate estimates for the operational cost of the technology when scaled up to site-wide or multi-site contractor use. In each instance where a field trial is performed, a well was selected for which recent monitoring data are available. The methods employed to collect these data may be considered a reasonable alternative to the method being developed in this program.

The following cost assessment provides both an analysis of the direct costs of demonstrations using experimental equipment and an assessment of the potential costs associated with a production system competing with other methods and equipment.

7.1 COST MODEL

The IS2 Cost Model breaks the costs associated with the technology into two broad categories: capital investment and operating costs (Tables 7.1 and 7.2). The capital investment category is related to the initial outlay required to procure an appropriate IS2 system for sampling at a field site, while the operating costs include consumables, labor, waste management, shipping, analysis, and other recurring charges.

7.1.1 Capital Investment Cost Model

Producing a precision, remotely operated, submerged sampler is complex. As much as possible, the IS2 team has incorporated off-the-shelf in the unit to provide the best cost efficiency and uniformity, with the fabrication and integration of the remainder of the device is at the ASU Machine Shop. The vendor parts and costs, as well as the machinist hours and costs were tracked. While a significant discount can be expected when a higher-volume device is produced commercially, the cost of the experimental IS2 samplers is similar to the cost of other contemporary systems.

Table 7.1. Capital Investment Cost Model for ER-201122

Category	Cost Element	Unit Cost (2015 dollars)
IS2 Peristaltic Sampler (Research Model)	Peristaltic Pump	2200
	Peristaltic Pump Control	750
	Shell and Caps	800
	Internal Structure	400
	Control Cable (500 ft)	500
	Assorted Hardware	300
	Total	*4950*
IS2 Reciprocating Sampler (Research Model)	Reciprocating Pump	2200
	Shell and Caps	800
	Internal Structure	400
	Control Cable (500 ft)	500
	Assorted Hardware	300
	Total	*4200*

7.1.2 Operating Costs Model

Labor is the largest component of the deployment costs. A comparison of the labor cost associated with the IS2 and that of the methods currently in place at the deployment sites is critical to establish the cost competitiveness of the new technology. The labor, materials, shipping, and waste disposal costs of the deployment will be tracked for comparison with the standard sampling methods.

Table 7.2. Operating Costs Model for ER-201122.

Category	Cost Element	Unit Cost (2015 dollars)
IS2 Groundwater Sampling (all depths)	SPE Cartridges	$1 to $2 / sample
	Other Consumables (gloves, waste bags, etc.)	$1 / sample
	Shipping	$40[1]
	Labor	$240[2]
	Total Sampling	*$280*[3]
Sample Analysis	Certified Laboratory	$60 to $200[4] / sample
IS2 Deep Well Sampling (>60 ft bgs, optional)	Crane Rental and Operation (install & deinstall)	$1500

[1]*Example shipping cost: FedEx Standard Overnight from San Diego to Los Angeles, 1 kg package including styrofoam cooler, samples, and ice or ice substitute.*
[2]*Example labor cost: Two technicians, $60 per technician-hour, 2 hr for install-deinstall.*
[3]*Example installation: One well, triplicate samples, one contaminant or class of contaminant.*
[4]*Example analyses: $60/sample for Hexavalent Chromium, $100/sample for EPA 8260B, $200/sample for EPA 8270C.*

7.2 COST COMPETITIVENESS

The capital cost of these research instruments is largely in line with that of other commercially available instruments that might be deployed in order to develop similar datasets (Table 7.3).

Table 7.3. Comparison of capital costs associated with several sampling instruments.

Instrument	Configuration	Capital Cost (2015 dollars)
IS2 (Research Model)	Composite Samples	4200
	Reciprocating Pump	
	500 ft Control Cable	
ISCO Model 6700	Composite or Sequential Samples	4100
	25 ft lift	
Solinst 407 Bladder Pump	Discrete Samples	3100
	Solinst 125 psi Controller and Tubing Cart	
	Solinst Air Compressor	
	Solinst 407 Bladder Pump (Stainless Steel, 1” x 2’)	
	100 ft lift, PTFE-lined tube	
Solinst 407 Bladder Pump	Discrete Samples	4400
	Solinst 250 psi Controller and Tubing Cart	
	Solinst Air Compressor	
	Solinst 407 Bladder Pump (Stainless Steel, 1” x 2’)	
	>200 ft lift, PTFE-lined tube	
Solinst 408 Double Valve Pump	Discrete Samples	4200
	Solinst 250 psi Controller and Tubing Cart	
	Solinst Air Compressor	
	Solinst 408 Bladder Pump (Stainless Steel, 5/8” x 1’)	
	>200 ft lift, PTFE-lined tube	
AquiStar Multi-Parameter Smart Sensor and Data Logger	Discrete Samples (High-frequency time series)	6200
	Pressure, Conductivity, pH, Dissolved Oxygen (DO), and Temperature sensors	
ProHydro Snap Sampler	Discrete Samples	1500
	3x 40-mL VOA	
	Sampling at >200 ft	

In addition to researching capital costs, the IS2 team tracked or estimated operating costs for the IS2 demonstrations and for other samples taken during the demonstrations using the cost-comparison matrices shown in Table 7.4 and 7.5. These estimates support the conclusion that IS2 composite samples are similar in cost to discrete samples. Taking significantly more samples (10s instead of 1s) would substantially impact the per-sample cost of all methods, with the IS2 cost-efficiency improving significantly due to the lower weight of sorbed samples when compared to liquid samples.

Table 7.4. Cost data for first demonstration at former Williams AFB.

	Site Sampling Plan (2015 dollars)		
	Method Used by Site Manager (Solinst 407) Nov. 2013	Bailed Sample Nov. 2013	IS2 Deployment Nov. 2013
Capital Costs			
Equipment	4400[1]	400	4950[2]
Installation	0	0	0
Total	4400	400	4950
Operating Costs			
Equipment Rental	0	0	0
Consumables	0	6.75 Bailer	10 (6x cartridge) 25 (4x pump tube)
Deployment Labor	60 Pump Tech (1 hr)	60 Bailer Tech (1 hr) (salary+overhead)	1140 crane two workers two days (2 h) 120 IS2 Tech (2 h)
Packaging and Shipping	0	0	0
Analysis	100	100	160
Waste Disposal	NA	NA	NA
Total	160 (single time-discrete sample)	170 (single time-discrete sample)	250 shallow 1400 deep (24-hour composite sample in triplicate)

[1]*Estimate based on configuration required for 200 ft lift.*
[2]*Estmate for research model with peristaltic pump.*

Table 7.5. Cost data for second demonstration at NAS North Island.

	Site Sampling Plan (2015 dollars)		
	Method Used by Site Manager (Unknown Bladder Pump)	ISCO 3700 Oct. 2014	IS2 Deployment Nov. 2014
Capital Costs			
Equipment	2600[1]	0	4200[2]
Installation	0	0	0
Total	2600	0	4200
Operating Costs			
Equipment Rental	0	450/week	0
Consumables	0	20 Pump Tubing	5 (3x cartridge)
Deployment Labor	60 Technicians (1 Tech., 1 hr)	120 Technicians (1 Tech., 2 hr)	240 Technicians (2 Tech., 2 hr)
Packaging and Shipping	40 (2kg, FedEx Standard Overnight, San Diego to Los Angeles)[3]	80 (15kg, FedEx Standard Overnight, San Diego to Los Angeles)[4]	40 (1kg, FedEx Standard Overnight, San Diego to Los Angeles)
Analysis	60 (1 sample)	720 (12 samples)	180 (3 samples)
Waste Disposal	NA	NA	NA
Total	160 for one time-discrete sample	Including Rental: 70 per sample 800 for 24-hr time series Excluding Rental: 30 per sample 350 for 24-hr time series	155 per sample for 28-day composite in triplicate

[1]*Estimate based on Solinst Model 407 configuration required for 100 ft lift.*
[2]*Estimate for research model with reciprocating pump.*
[3]*Estimate based on 1 L of quantification and QC samples.*
[4]*Estimate based on 12 samples taken for 24-hour, 2-hr interval sampling.*

8.0 IMPLEMENTATION ISSUES

No regulations or regulatory barriers have been identified that may apply to the use of this technology; rather, we see an opportunity for this technology to enter an already crowded field and provide a new and complementary data set. While the IS2 uses active transport to move contaminated groundwater to the sorbent cartridges, it is best described as an integrative, accumulative sampler and as such should be implemented using the best practices for such samplers as described in ASTM Standard D7929-14, "Standard Guide for Selection of Passive Techniques for Sampling Groundwater Monitoring Wells."

When configured with peristaltic rather than syringe pumps, use of the IS2 can be challenging in situations in situations where sampling authorities require simultaneous acquisition of both liquid composite and solid composite samples at significant depths featuring high hydrostatic pressures. The design and sourcing of precision passive valves to prevent inlet pressure from driving the fluid flow has been a significant engineering challenge. However, the most common and most desirable configuration of the device will be one which produces only solid-phase samples and returns processed water to the well bore. This greatly reduces the engineering requirements for the instrument, as the equal inlet and outlet pressures enable a relatively simple valve system, or a peristaltic pump, to control the flow very precisely.

The IS2 sampler as currently embodied is a research instrument fabricated from a mixture of commercial off-the-shelf (COTS) parts and parts designed in-house and fabricated by the ASU machine shop. These instruments work as intended, but are heavier, more complex, and more expensive than a commercial embodiment would be. As such, the best way for this technology to improve and to reach the intended audience is for a commercialization effort to design and build a series of devices for sale or for use by a monitoring consultant. Such an effort could simplify the instruments and improve maintainability by providing a standard parts set. Such simplification, standardization, and serial production would also reduce the cost of the instrument. To this end, the team participated in the 2012 ASU Venture Catalyst program, and has reached out to other potential collaborators. We sincerely hope that this report will provide an asset in a continuing effort to bring the concept of *in situ* solid phase extraction to a wider audience.

9.0 REFERENCES

AFCEE. (2011a). *Final Site SF004 Groundwater Monitoring Report, May 2011 Event, Former Williams AFB, Mesa, Arizona*. (Williams AR #1472). Lackland AFB, TX.

AFCEE. (2011b). *Final Site ST012 Former Liquid Fuels Storage Area Groundwater Monitoring Report, February 2011 Event, Former Williams AFB, Mesa, Arizona.* (Williams AR #1458). Lackland AFB, TX.

AMEC Environment & Infrastructure, I. (2013). *Final Pre-Design Investigation Work Plan, Operable Unit 2, Site ST012, Former Williams AFB, Mesa, Arizona*. (Williams AR #1539). Phoenix, Arizona.

Barcelona, M. J., Varljen, M. D., Puls, R. W., & Kaminski, D. (2005). Ground water purging and sampling methods: History vs. hysteria. *Ground Water Monitoring & Remediation, 25*(1), 52-62. doi: 10.1111/j.1745-6592.2005.0001.x

Bowen, A. B., Westerhoff, P. K., Hristovski, K., & Halden, R. U. (2014). *Occurrence and Treatment of Hexavalent Chromium and Arsenic in Arizona Municipal and Industrial Waters.* Arizona State University. Retrieved from http://hdl.handle.net/2286/R.I.25147

Britt, S. L., Parker, B. L., & Cherry, J. A. (2010). A Downhole Passive Sampling System To Avoid Bias and Error from Groundwater Sample Handling. *Environmental Science & Technology, 44*(13), 4917-4923. doi: 10.1021/es100828u

Carron, K., Peitersen, L., & Lewis, M. (1992). Octadecylthiol-modified surface-enhanced Raman spectroscopy substrates: a new method for the detection of aromatic compounds. *Environmental Science & Technology, 26*(10), 1950-1954.

Einarson, M. D., & Mackay, D. M. (2001). Peer Reviewed: Predicting Impacts of Groundwater Contamination. *Environmental Science & Technology, 35*(3), 66A-73A.

Executive Order No. 13,423, 48 C.F.R. § 970.5223-6 (2011).

Executive Order No. 13,514, 3 C.F.R. § 13,514 (2010).

Former Williams AFB. (2011). from Google Earth

Halden, R. U. (2009). Methods and systems for ground and surface water sampling and analysis: Google Patents.

Halden, R. U. (2010). Using automated robotic device comprising capillary tubes to analyze and detect microorganism in soil; bioremediation: Google Patents.

Halden, R. U. (2011). Methods and systems for ultra-trace analysis of liquids: Google Patents.

Halden, R. U. (2012a). Method and apparatus for environmental monitoring and bioprospecting: Google Patents.

Halden, R. U. (2012b). Methods and systems for fluid examination and remediation: Google Patents.

Halden, R. U. (2014). Methods and systems for fluid examination and remediation: Google Patents.

Halden, R. U., McClellan, K., & Kalinowski, T. (2012). Parallel In Situ Screening of Remediation Strategies for Improved Decision Making, Remedial Design, and Cost Savings. Alexandria, VA: ESTCP.

Halden, R. U., & Roll, I. B. (2012). Devices and methods for determination of bioavailability of pollutants. In World Intellectual Property Organization (WIPO) Application 2, 145,299 (Ed.): Google Patents.

Hennion, M.-C. (1999). Solid-phase extraction: method development, sorbents, and coupling with liquid chromatography. *Journal of Chromatography A, 856*(1–2), 3-54. doi: http://dx.doi.org/10.1016/S0021-9673(99)00832-8

ITRC. (2010). Technology Overview: Use and Measurement of Mass Flux and Mass Discharge at Contaminated Sites. Washington, DC.

Li, D.-W., Zhai, W.-L., Li, Y.-T., & Long, Y.-T. (2014). Recent progress in surface enhanced Raman spectroscopy for the detection of environmental pollutants. *Microchimica Acta, 181*(1-2), 23-43. doi: 10.1007/s00604-013-1115-3

Medina, V. F., Larson, S. L., Extine, B., & Bednar, A. (2005). Perchlorate analysis using solid-phase extraction cartridges. *Journal of Chromatographic Science, 43*(4), 195-200.

Naval Air Station North Island. (2010). from Google Earth

Parker, L., & Britt, S. (2012). The Effect of Bottle Fill Rate and Pour Technique on the Recovery of Volatile Organics. *Ground Water Monitoring & Remediation, 32*(4), 78-86. doi: 10.1111/j.1745-6592.2012.01401.x

Pettyjohn, W. A., Dunlap, W. J., Cosby, R., & Keeley, J. W. (1981). Sampling Ground Water for Organic Contaminants. *Ground Water, 19*(2), 180-189. doi: 10.1111/j.1745-6584.1981.tb03457.x

Powell, R. M., & Puls, R. W. (1993). Passive sampling of groundwater monitoring wells without purging: multilevel well chemistry and tracer disappearance. *Journal of Contaminant Hydrology, 12*(1–2), 51-77. doi: 10.1016/0169-7722(93)90015-k

Stroo, H. F., Leeson, A., Marqusee, J. A., Johnson, P. C., Ward, C. H., Kavanaugh, M. C., . . . Lebrón, C. A. (2012). Chlorinated ethene source remediation: Lessons learned. *Environmental Science & Technology, 46*(12), 6438-6447.

USDOD. (2012). *DOD FINANCIAL MANAGEMENT REGULATION*. (7000.14-R). Washington, D.C.: Retrieved from http://comptroller.defense.gov/fmr/.

USDOE. (2011). *Hanford Site Groundwater Monitoring Report for 2010*. (DOE/RL-2011-01). Richland, WA: Retrieved from http://www.hanford.gov/c.cfm/sgrp/GWRep10/start.htm.

USEPA. (2004). Cleaning Up the Nation's Waste Sites: Markets and Technology Trends. Washington, DC.

Verreydt, G., Bronders, J., & Van Keer, I. (2014). Lab and field screening of 5 selected passive samplers for the measurement of VOC fluxes in groundwater. *Journal of Agricultural Science and Applications, 3*(2).

Vrana, B., Allan, I. J., Greenwood, R., Mills, G. A., Dominiak, E., Svensson, K., . . . Morrison, G. (2005). Passive sampling techniques for monitoring pollutants in water. *TrAC Trends in Analytical Chemistry, 24*(10), 845-868. doi: 10.1016/j.trac.2005.06.006

Vroblesky, D. A., & Hyde, W. T. (1997). Diffusion samplers as an inexpensive approach to monitoring VOCs in ground water. *Ground Water Monitoring and Remediation, 17*(3), 177-184. doi: 10.1111/j.1745-6592.1997.tb00593.x

APPENDICES

Appendix A: Points of Contact

POINT OF CONTACT Name	ORGANIZATION Name Address	Phone Fax E-mail	Role in Project
Rolf Halden	Arizona State University Biodesign Institute 1001 S. McAllister Ave. Tempe, AZ 85287-5701	Tel: 480-727-0893 Fax: 480-727-0889 Rolf.Halden@asu.edu	Principal Investigator
Isaac Roll		Tel: 480-727-2138 Isaac.Roll@asu.edu	Graduate Research Associate (Project Lead)
Nancy Ruiz	Naval Facilities Engineering Command Engineering Service Center 1100 23rd Avenue, ESC411 Port Hueneme, CA 93043	Tel: 805-982-1155 Nancy.Ruiz@navy.mil	Department of Defense Liaison

Appendix B: US 2011/0003400 A1, "Methods and systems for ground and surface water sampling and analysis"

This page intentionally blank.

US 20110003400A1

(19) United States

(12) Patent Application Publication

Halden

(10) Pub. No.: US 2011/0003400 A1

(43) Pub. Date: Jan. 6, 2011

(54) METHODS AND SYSTEMS FOR GROUND AND SURFACE WATER SAMPLING AND ANALYSIS

(75) Inventor: **Rolf U. Halden**, Tempe, AZ (US)

Correspondence Address:
EDWARDS ANGELL PALMER & DODGE LLP
P.O. BOX 55874
BOSTON, MA 02205 (US)

(73) Assignee: **THE JOHNS HOPKINS UNIVERSITY**, Baltimore, MD (US)

(21) Appl. No.: **12/918,965**

(22) PCT Filed: **Feb. 20, 2009**

(86) PCT No.: **PCT/US09/01076**

§ 371 (c)(1), (2), (4) Date: **Aug. 23, 2010**

Related U.S. Application Data

(60) Provisional application No. 61/066,644, filed on Feb. 22, 2008.

Publication Classification

(51) **Int. Cl.**
G01N 33/53 (2006.01)
B01L 1/00 (2006.01)

(52) **U.S. Cl.** **436/501**; 436/73; 422/430

(57) **ABSTRACT**

The invention provides devices, methods, and kits for collection of dry samples from fluid samples such as ground or surface water. Devices of the invention include a casing including a water intake zone wherein the casing encloses, a fluid reservoir, a pump, a non-aqueous collection matrix cartridge, and a waste water conduit, wherein the water intake zone, the fluid reservoir, the pump, the non-aqueous collection matrix cartridge, and the waste water conduit are all operably linked in sequence. Methods for using the device of the invention are provided. Kits including the device of the invention or for use with the invention are also provided.

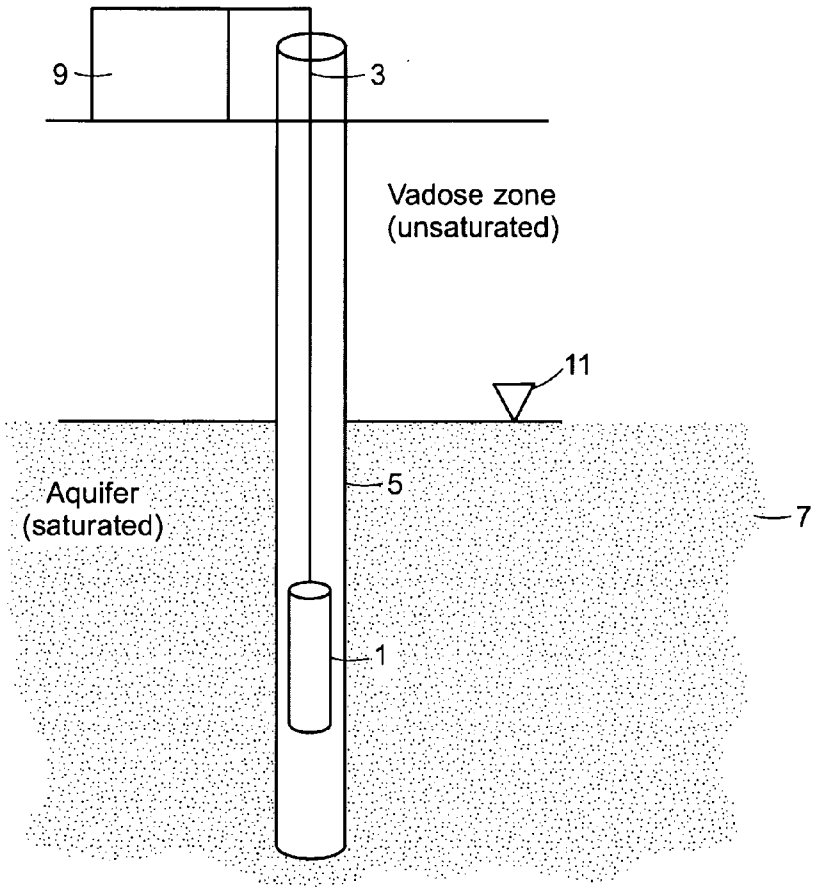

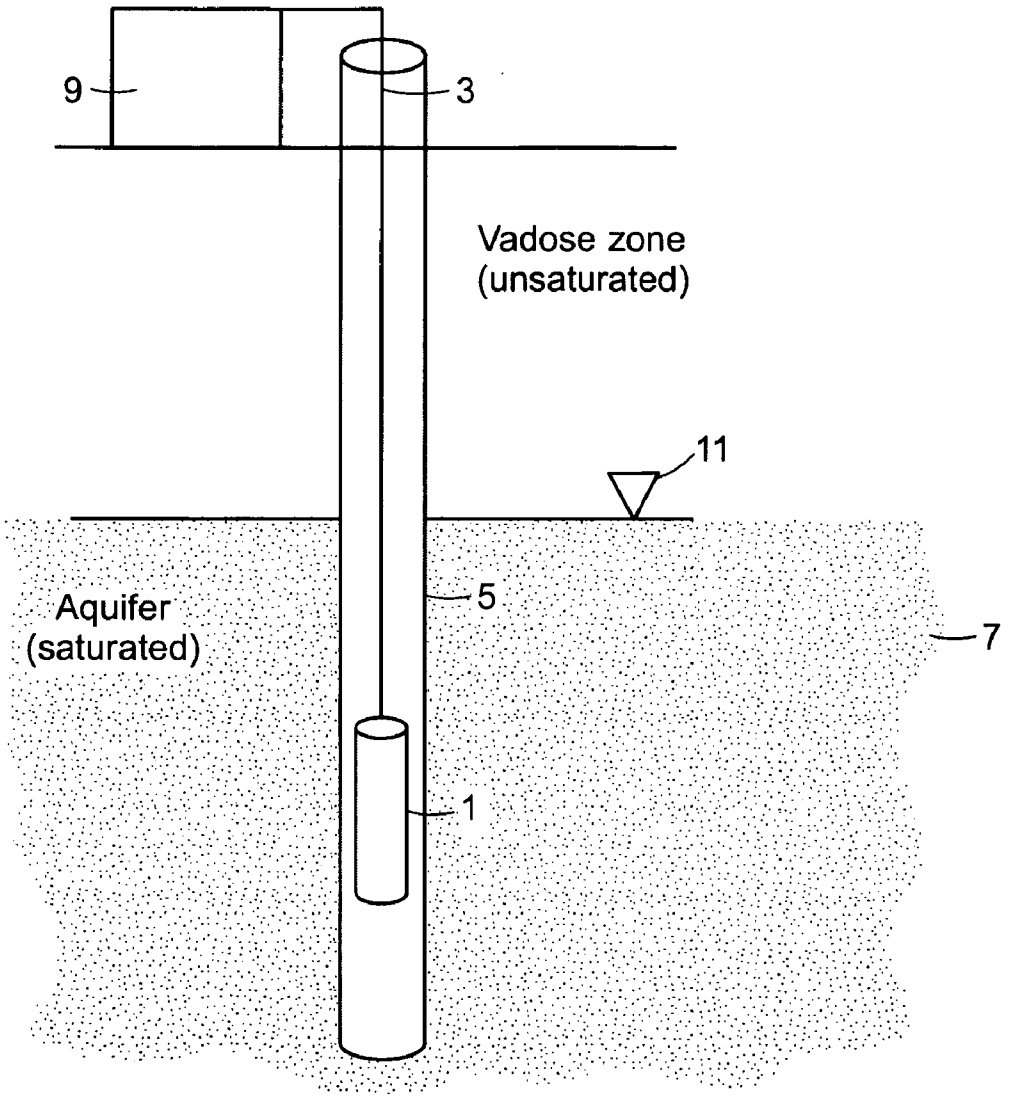

FIG. 1

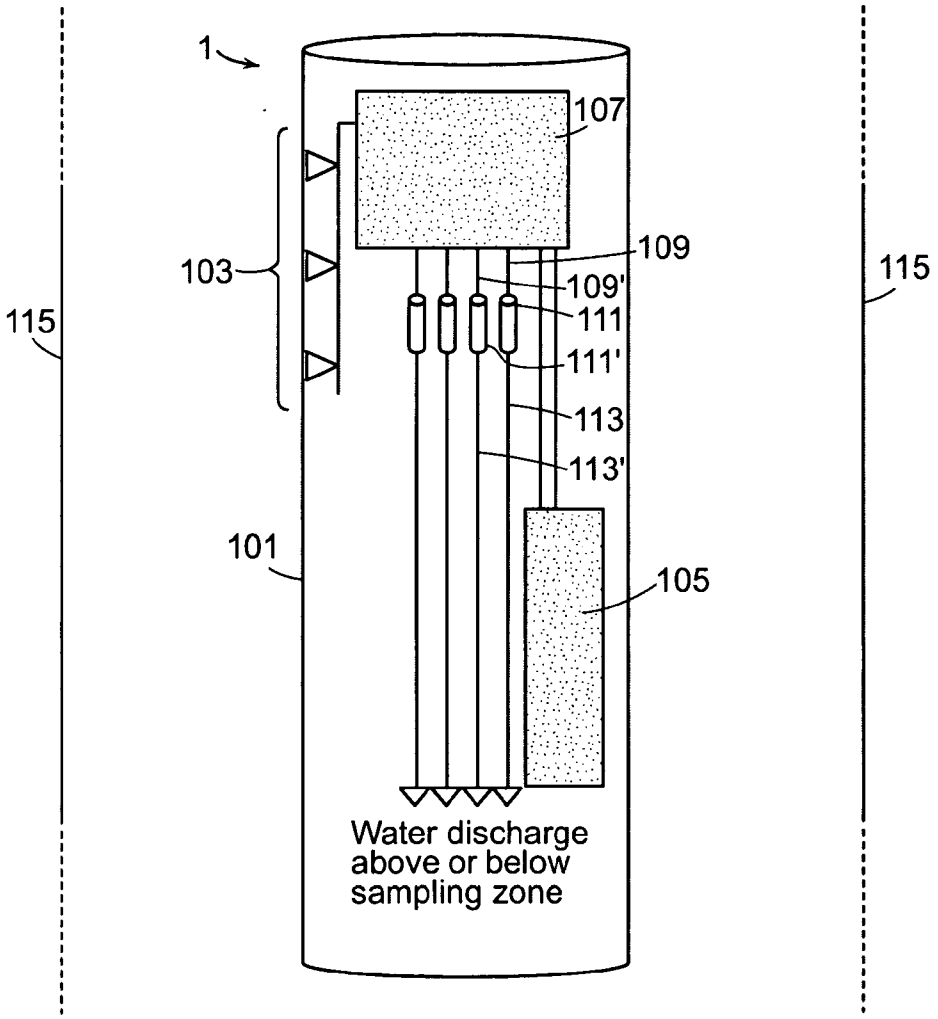
1
107
109
109'
111
111'
113
113'
103
115
115
101
105
Water discharge
above or below
sampling zone

FIG. 2

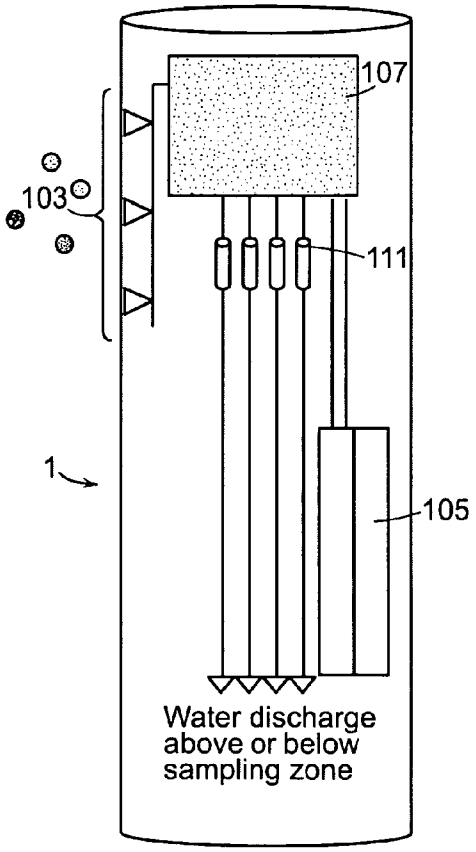
107
103
111
1
105
Water discharge above or below sampling zone

FIG. 3A

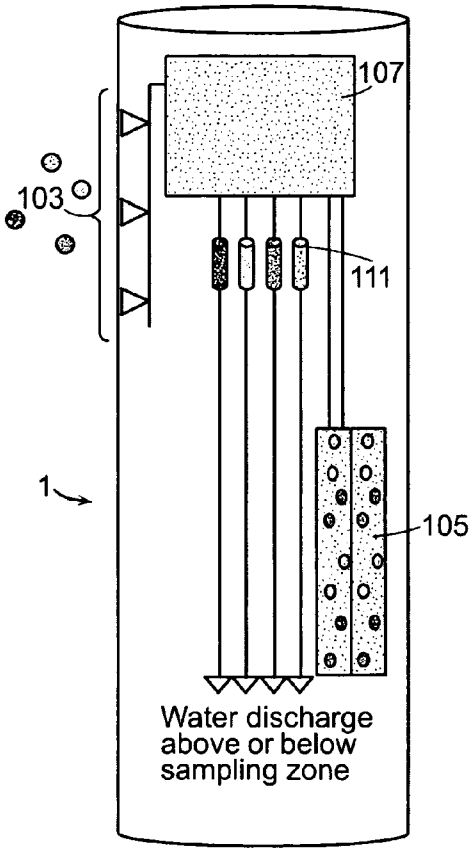
107
103
111
1
105
Water discharge above or below sampling zone

FIG. 3B

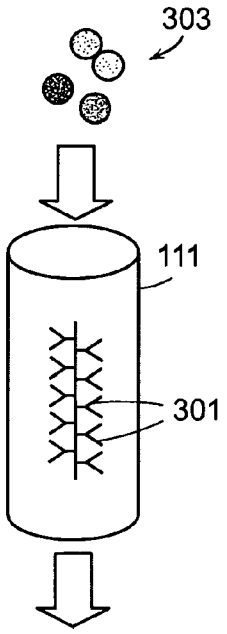

FIG. 4A

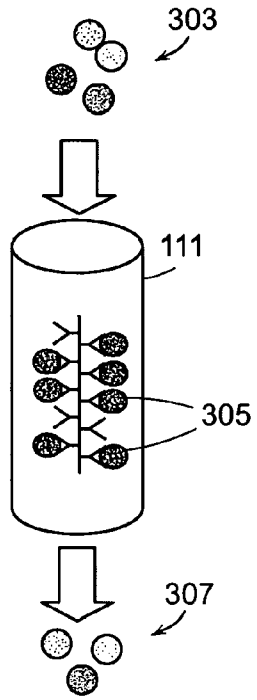

FIG. 4B

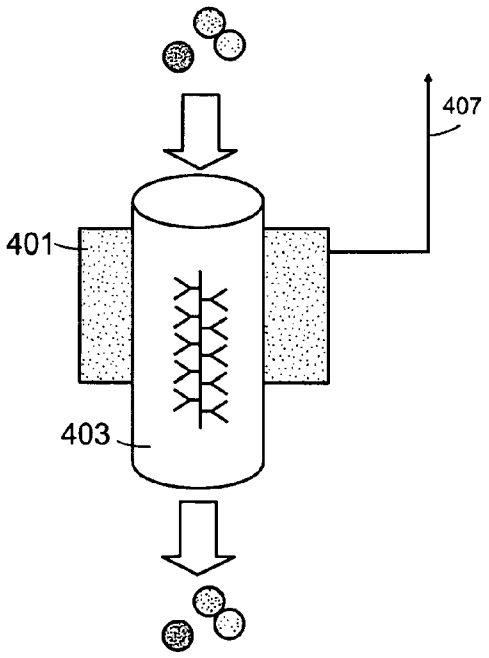

FIG. 5A

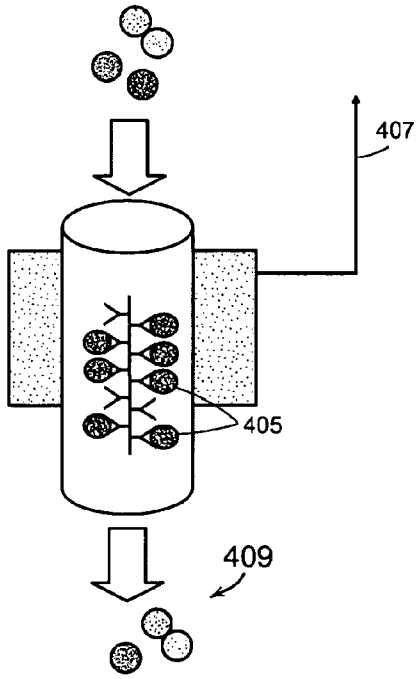

FIG. 5B

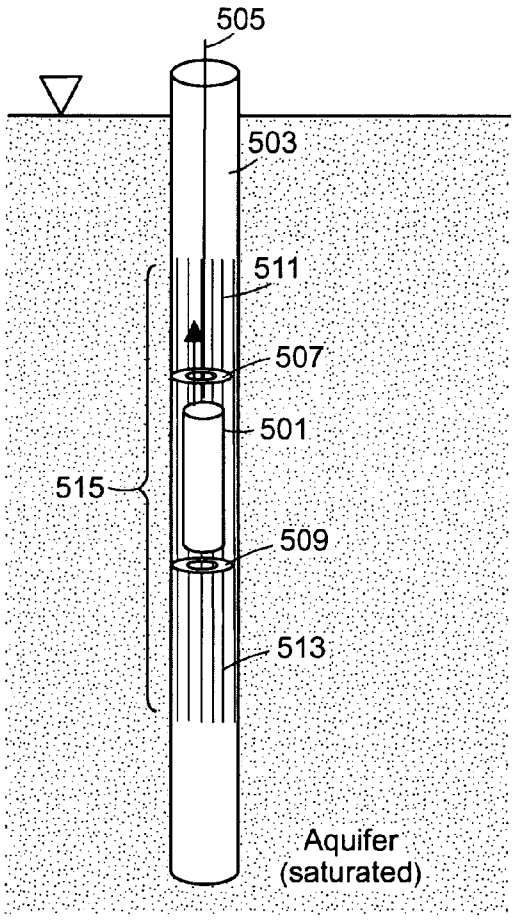
505
503
511
507
501
515
509
513
Aquifer
(saturated)

FIG. 6A

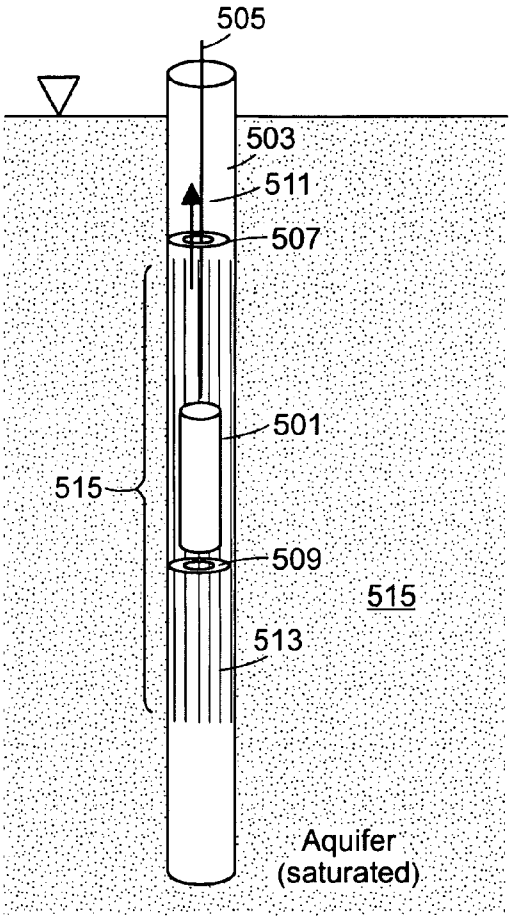
505
503
511
507
501
515
509
515
513
Aquifer
(saturated)

FIG. 6B

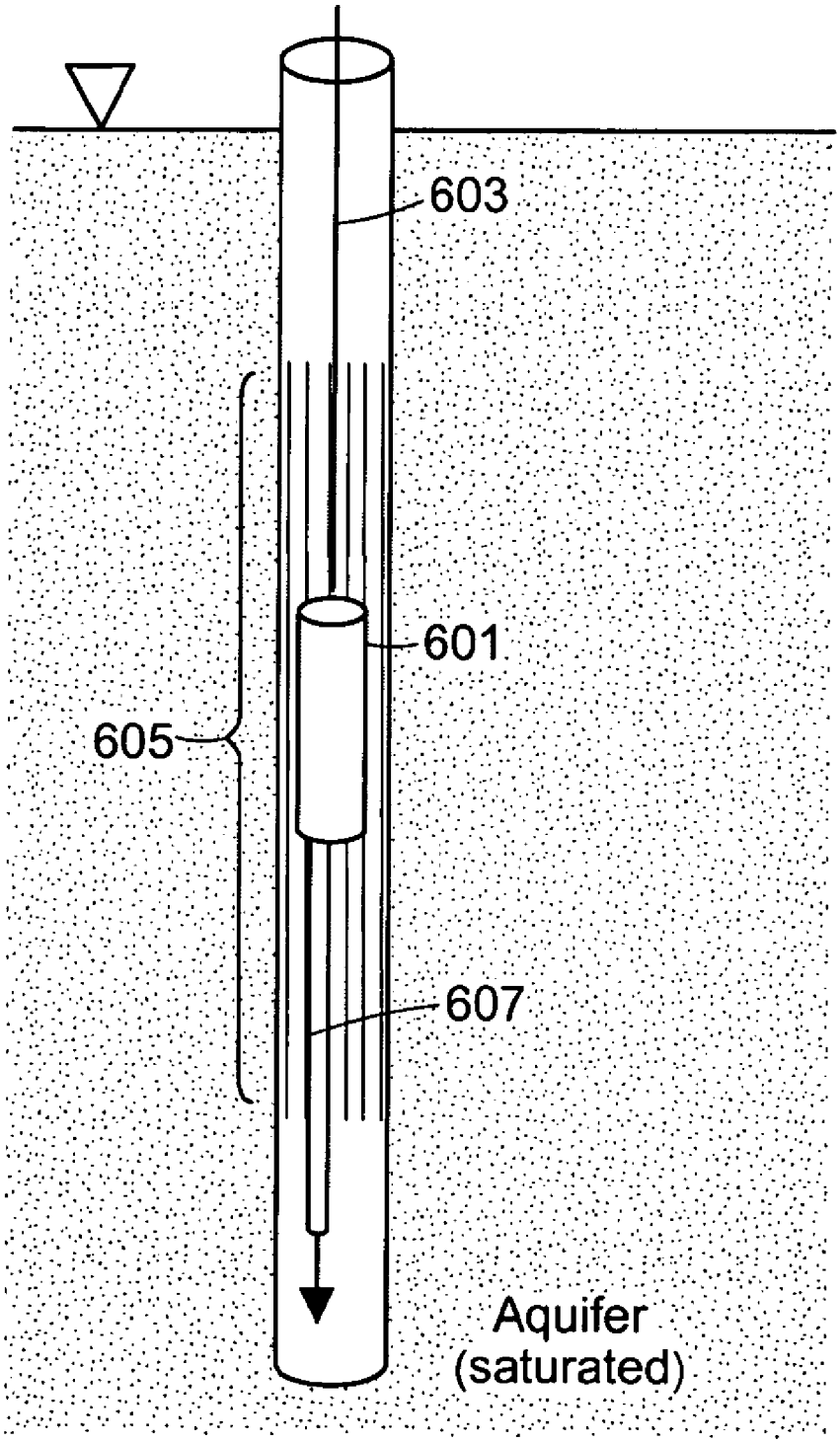

FIG. 7

METHODS AND SYSTEMS FOR GROUND AND SURFACE WATER SAMPLING AND ANALYSIS

CROSS REFERENCE TO RELATED APPLICATIONS

[0001] The instant application is related to U.S. Provisional Patent Application Ser. No. 61/066,644 filed on Feb. 22, 2008 which is incorporated herein by reference in its entirety.

STATEMENT OF RIGHTS TO INVENTIONS MADE UNDER FEDERALLY SPONSORED RESEARCH

[0002] This work was supported in part by NIH Grant NIEHS-R01 1R01ES015445. The government has certain rights in the invention.

BACKGROUND

[0003] Reliable sampling of ground water and surface water frequently suffers from many limitations, including the collection of discrete water samples rather than time-integrated ones; the generation of large volumes of excess water considered hazardous for which disposal can be difficult and expensive; in groundwater sampling, the collection of depth-discrete water samples not originating from the ascribed location of sampling; and also in groundwater sampling, collecting samples of compromised chemistry due to atmospheric gas intrusion (e.g., dissolved oxygen intrusion) from water cascading down following evacuation of a well during well-purging.

SUMMARY OF THE INVENTION

[0004] The invention provides method for collection of a dry sample by contacting a non-aqueous collection matrix with a ground water sample in situ wherein the sample comprises or is suspected of comprising an analyte that binds the non-aqueous collection matrix.

[0005] The methods of the invention can be carried out by providing a device including a casing with a water intake zone enclosing a fluid reservoir, a pump, and a non-aqueous collection matrix cartridge. The water intake zone, the fluid reservoir, the pump, the non-aqueous collection matrix cartridge, and the waste water conduit are all operably linked in sequence. Further, the non-aqueous collection matrix cartridge is operably linked to a waste water conduit. The method includes contacting the water intake zone with a fluid sample suspected of containing at least one analyte for binding to the non-aqueous collection matrix cartridge such that the fluid sample sequentially enters the fluid reservoir, the pump, the non-aqueous collection matrix cartridge, and the waste water conduit, thereby collecting a dry sample.

[0006] The invention provides devices in which the casing encloses a plurality of non-aqueous collection matrix cartridges. In some embodiments, the plurality of non-aqueous collection matrix cartridges bind the same analyte. In an alternative embodiment, the plurality of non-aqueous collection matrix cartridges bind a plurality of analytes.

[0007] The methods of the invention provide for the use of the device in a ground water well in a saturated aquifer. In an alternative embodiment, the device can be used for the collection of a dry sample from groundwater.

[0008] Methods of the invention include the use of the device in a ground water well including a screened interval, and optionally further including one or more inflatable liners either above or below the device. When using inflatable liners in the well, it is preferable that the waste water conduit empties distal to an inflatable liner in the well.

[0009] The invention further provides methods for a real time sensor operably linked to a non-aqueous collection matrix cartridge. The real time sensor can be used for collecting data continuously or periodically regarding analyte binding to the non-aqueous collection matrix cartridge. Alternatively, the real time sensor can be used for collecting data episodically, e.g., drop of water table, failure of a connection in the device.

[0010] By collection of dry samples, rather than fluid samples, the methods of the invention allow for collection of samples for extended time periods. For example, the water intake zone can be contacted with a fluid sample for about 1 second to about 1 year, for example for about 1 minute, about 1 hour, about 1 day, about 1 week, about one month, about 3 months, about 6 months, about 9 months, or a year.

[0011] The method of the invention provides for the performance of an in well purge using a purging a device having a minimum length approximated by a formula:

Volume of water [cm^3]=(radius of the well [cm])*(radius of the well [cm])*π*length of the discharge line 607 [cm],

wherein π is ~3.14, and the radius of the well is half the inner diameter of the monitoring well.

[0012] The invention further provides for dry samples prepared by any of the methods of the invention.

[0013] The invention further provides devices that can be used for practicing the invention including a casing having a water intake zone wherein the casing encloses, a fluid reservoir, a pump, preferably a multi-channel pump, and one or more non-aqueous collection matrix cartridges wherein the water intake zone, the fluid reservoir, the pump, the non-aqueous collection matrix cartridge, and the waste water conduit are all operably linked in sequence. The non-aqueous collection matrix cartridge is operably linked to a waste water conduit. The device can further include a tether for positioning the device in a collection well. The tether can further be used to operably links the device to a control system.

[0014] In some embodiments of the invention, each of the non-aqueous collection matrix cartridges all bind the same analyte. In other embodiments of the invention, the non-aqueous collection matrix cartridges bind a plurality of analytes.

[0015] In some embodiments of the invention, the device further includes a real time sensor operably linked to a non-aqueous collection matrix cartridge. The real time sensor can be used for collecting data continuously or periodically regarding analyte binding to the non-aqueous collection matrix cartridge. Alternatively, the real time sensor can be used for collecting data episodically, e.g., drop of water table, failure of a connection in the device.

[0016] The invention provides devices optionally including a discharge line having a minimum length approximated by a formula:

Volume of water [cm3]=(radius of the well [cm])*(radius of the well [cm])*π*length of 607 [cm],

wherein π is ~3.14, and the radius of the well is half the inner diameter of the monitoring well.

[0017] The invention further provides kits for practicing the methods of the invention and for use with devices of the

invention including instructions for use of a device of the invention and one, two, three or more components for use with the device such as: a casing including a water intake zone, a fluid reservoir, a pump, a non-aqueous collection matrix cartridge, a waste water conduit, and connector tubing. The invention further provides kits including a plurality of non-aqueous collection matrix cartridges for use with the methods or any of the devices of the invention and instructions for use.

DEFINITIONS

[0018] "Analyte" is understood as any compound that may be present in a sample that can be captured using a non-aqueous collection matrix and detected using an assay or method.

[0019] By "cartridge" is meant a container enclosing the solid matrix through which the sample is passed through or over. The solid matrix is enclosed in the cartridge to allow the sample to pass through the cartridge, for example into an inlet port and out of an outlet port, wherein the solid matrix is retained within the cartridge.

[0020] By "concentration" or "concentration of the analyte" as used herein is understood as decreasing the volume in which a given mass of an analyte is present. For example, decrease the volume in which the given mass analyte is present by at least at least 2-fold, at least 10-fold, at least 10^2-fold, at least 10^3-fold, at least 10^4-fold, or at least 10^5-fold.

[0021] "Contacting" as used herein is understood as bringing two components into sufficient proximity (e.g. a groundwater sample containing or potentially containing an analyte and a non-aqueous collection matrix that can bind the analyte, a fluid sample and the water intake zone of the device) for sufficient time and under appropriate condition of temperature, pressure, pH, ionic strength, etc. to allow for the interaction of the two components, e.g., the binding of the analyte to the non-aqueous collection matrix, the entry of water into the device through the water intake zone. Contacting in the context of the invention typically occurs in a non-aqueous collection matrix container such as cartridge, column, or other device that allows the water to flow through the container in a path to allow the water to contact the non-aqueous collection matrix. Contacting a non-aqueous collection matrix cartridge is understood as contacting the matrix within the cartridge with the fluid sample.

[0022] "Control system" as used herein is understood as a device such as a computer or recording device. The control system can be used predominantly for mechanical uses, such as positioning the device in the well. The control system can also be used for turning on and off various components of the device, such as the pump, opening and closing fluid lines in the pump, directing collection of a time integrated or time discrete sample, etc. The control system can also be used for the purpose of data collection in the form of electronic data, or by attachment to a chart recording device. The control system can be physically attached to the device by wires or cables. Alternatively, a wireless control system can be used with the device.

[0023] As used herein, "detecting", "detection" and the like are understood as an assay or method performed for identification of a specific analyte in a sample. The amount of analyte detected in the sample can be none (zero) or below the limit of detection (<LOD), positive and within the calibrated range, or positive and outside of the calibrated range of the assay or method.

[0024] "Distal" is understood herein as meaning further away than, typically relative to the device of the invention. For example, a waste line that empties distal to an inflatable liner empties on the far side, i.e., the opposite side, of the liner when viewed from the device. The side of the inflatable liner facing the device would be "proximal" to the device.

[0025] "Dry sample" as used herein is understood as the non-aqueous collection matrix cartridge after it has made contact with a fluid sample, such as groundwater or surface water, wherein at least one analyte is suspected of or known to be bound to the non-aqueous collection matrix in the cartridge. A dry sample can contain water or other fluid. All moisture does not need to be evacuated from the cartridge. However, the sample contains no more fluid that will fit in the cartridge with the non-aqueous collection matrix present in the cartridge. Both time-discrete samples and time-integrated samples can be converted to dry samples by use of a non-aqueous collection matrix cartridge. Conversion of aqueous to dry samples may occur in the subsurface (i.e., in situ) or on-site prior to shipping of samples.

[0026] As used herein, "kits" are understood to contain two or more components of the device of the invention, or components for use with a device of the invention, in appropriate packaging or with instructions for use.

[0027] "In situ" as used herein is understood as in the subsurface, preferably at or near the site that the sample is collected. "At or near the site that the sample is collected" is understood as at the same or similar depth such that pressure changes have little or no effect on the sample from the time that the sample is collected to the time that the sample is contacted with the non-aqueous matrix. It is understood that lateral movement within the well will typically have far less effect on pressure in the sample than movement in the depth in the well. In situ contacting of samples with a non-aqueous matrix is differentiated from contacting the non-aqueous matrix with the sample at the surface (i.e., ground level) when the sample is collected in the subsurface. It is understood that contacting surface water with the non-aqueous matrix at the site of collection (i.e., at ground level) is understood as contacting the sample with the matrix in situ.

[0028] As used herein, "interchangeable" is understood as the device being designed so that one or more components of the device can be readily exchanged for a similar component. For example, lines and non-aqueous collection matrix cartridges can be joined using bayonet connectors, rapid release connectors, quick connectors, screw connectors, compression connectors, Luer lock, or other similar type connectors that require no tools for the separation or connection of components. Further, non-aqueous collection matrix cartridges can be exchanged depending on the site of groundwater to be tested, the type and quantity of analyte to be detected, and the quantity of water to be tested. Similarly, tubing or other connectors for example from the pump to the non-aqueous collection matrix cartridges may be changed depending on the analyte to be detected to prevent adsorption into the tubing, or the volume or flow rate of the water to be tested. Interchangeable parts such as tubing or cartridges can be disposable. Such considerations are well understood by those of skill in the art.

[0029] As used herein, "non-aqueous analyte collection matrix", "matrix", "resin", and the like are understood as

material or a mixture of materials that are designed to come into contact with the fluid sample and, through their relatively greater affinity relative to water, will remove and concentrate the analyte or analytes of interest from the fluid sample including dissolved solid, gas, and particulate materials of interest. For example, groundwater or surface water can be passed through, over, or mixed (i.e., contacted) with the non-aqueous analyte collection matrix, thereby causing this matrix to bind and concentrate one or more analytes. It is understood that the binding properties of the materials for one or more specific analytes can depend on various properties of the sampled fluid, for example, ionic strength, pH, etc. The material can bind the analyte(s) specifically, e.g., chelator EDTA for binding heavy metals, peptide metal binding motifs, antibodies for binding desired antigens, molecular pockets formed by molecular imprinting, or specific and non-specific binding sites relying on van-der-Waals forces, hydrophobic interaction, hydrophilic interaction, mixed-mode interaction, hydrogen bridges, affinity binding sites, etc. Alternatively, the material can bind the analyte(s) based on charge, e.g., cation exchange, anion exchange or mixed-mode ion exchange materials. The analyte collection matrix does not need to be a solid. It can be a non-aqueous liquid, a gel or a semi-solid that attracts and concentrates the analytes by the mechanisms mentioned above as well as by chemical partitioning out of the water and into the analyte collection matrix. The matrix can be contacted with the liquid sample in any known format, including a column, bulk binding, etc. Such methods are well known to those of skill in the art.

[0030] "Obtaining" is understood herein as manufacturing, purchasing, or otherwise coming into possession of.

[0031] "Operably linked" is understood as a connection, either physical or electronic, between two components of the device, or a component of the device and a remote sensor, data collector, controller, computer, or the like such that the components operate together as desired. For example, a fluid line operably linked to a non-aqueous collection matrix cartridge is understood as a fluid line that delivers fluid to the non-aqueous collection matrix cartridge without loss of fluid and at the desired flow rate. A device operably linked to the controller can be moved to the desired position in the well, and the pump or other components of the device can be turned on or off using the controller.

[0032] As used herein, "plurality" is understood to mean more than one. For example, a plurality refers to at least two, three, four, five, ten, 25, 50, 75, 100, or more.

[0033] As used herein, "real time" is understood as while the process is occurring, for example, collecting data, and preferably transmitting data to a device or person, at the same time the sample is being collected. The data need not be transmitted instantaneously, but is preferably transmitted within about 1 minute, 2 minutes, 5 minutes, 10 minutes, 15 minutes, or 30 minutes from the time that it was collected, or the collection of the data packet was completed. Data can be sent continuously or periodically in real time for monitoring the progress of a process, or can be sent episodically, e.g., upon overload of a non-aqueous collection matrix cartridge, failure of the device, detection of water table, completion of in well purge, etc.

[0034] A "sample" or "fluid sample" as used herein refers to a material, particularly ground water or surface water that is suspected of containing, or known to contain, an analyte. A fluid sample can include dissolved gases, as well as any dissolved or particulate solids. Methods and devices of the invention can be used for the collection of gases as well as dissolved or particulate solids upon selection of the appropriate non-aqueous collection matrix. A reference sample can be a "normal" sample, from a site known to not contain the analyte. A reference sample can also be taken at a "zero time point" prior to contacting the cell with the agent to be tested. A reference sample can also be taken during or after collection of a time integrated sample. A reference sample is typically a time discrete sample when it is collected at the same site as a time integrated sample.

[0035] As used herein, "time-discrete sampling" is understood as collection of a sample over a short period of time, for example, less than about an hour, less than about 30 minutes, less than about 15 minutes, less than about 10 minutes, less than about 8 minutes, less than about 5 minutes, less than about 4 minutes, less than about 3 minutes, less than about 2 minutes, less than about 1 minute. Time discrete sampling can also be known as "grab sampling." The amount of time over which the sample is captured is dependent on a number of considerations known to those of skill in the art. Such considerations include, but are not limited to, the concentration of the analyte in the sample, sensitivity of methods for detection of the analyte in the sample, the maximum yield of the water source samples, the kinetics of binding to the extraction matrix, the temperature of the water sampled, etc.

[0036] As used herein, "time-integrated sampling" is understood as the collection of one or more samples, wherein each sample is collected over an extended period of time, for example at least about 1 hours, at least about 2 hours, at least about 3 hours, at least about 4 hours, at least about 5 hours, at least about 8 hours, at least about 12 hours, at least about 15 hours, at least about 18 hours, at least about 21 hours, at least about 24 hours, at least about 36 hours, at least about 2 days, at least about 3 days, at least about 4 days, at least about 5 days, at least about 6 days, at least about one week, at least about 8 days, at least about 9 days, at least about 10 days, at least about 2 weeks, at least about one month, at least about 3 months, at least about 6 months, at least about 9 months, at least about one year, or more. The amount of time over which the sample is captured is dependent upon a number of considerations well known to those of skill in the art. Such considerations include, but are not limited to, the concentration of the analyte in the sample, sensitivity of methods for detection of the analyte in the sample, tidal changes or other changes that would affect the height of the water table through the collection time or the direction of water flow and thus the composition of the water sampled, capacity of binding non-aqueous collection matricies for analyte mass, kinetics of mass transfer to the extraction material, etc.

[0037] Ranges provided herein are understood to be shorthand for all of the values within the range. For example, a range of 1 to 50 is understood to include any number, combination of numbers, or sub-range from the group consisting of 1, 2, 3, 4, 5, 6, 7, 8, 9, 10, 11, 12, 13, 14, 15, 16, 17, 18, 19, 20, 21, 22, 23, 24, 25, 26, 27, 28, 29, 30, 31, 32, 33, 34, 35, 36, 37, 38, 39, 40, 41, 42, 43, 44, 45, 46, 47, 48, 49, and 50.

[0038] Unless specifically stated or obvious from context, as used herein, the term "or" is understood to be inclusive.

[0039] Unless specifically stated or obvious from context, as used herein, the terms "a", "an", and "the" are understood to be singular or plural.

[0040] Unless specifically stated or obvious from context, as used herein, the term "about" is understood as within a range of normal tolerance in the art, for example within 2

standard deviations of the mean. About can be understood as within 10%, 9%, 8%, 7%, 6%, 5%, 4%, 3%, 2%, 1%, 0.5%, 0.1%, 0.05%, or 0.01% of the stated value.

[0041] Any devices or methods provided herein can be combined with one or more of any of the other devices and methods provided herein.

BRIEF DESCRIPTION OF THE FIGURES

[0042] FIG. **1** shows a cross-section of a subsurface showing the deployment of the sampling device in a groundwater monitoring well;

[0043] FIG. **2** is a schematic of a preferred embodiment of the sampling device and system showing its various components;

[0044] FIGS. **3**A and **3**B are schematics illustrating the collection of time integrated samples in a groundwater monitoring well and concomitant concentration of various analytes in multiple sampling collectors;

[0045] FIGS. **4**A and **4**B are schematics of a preferred embodiment of the analyte collector showing the concentration of a specific analyte from groundwater over time;

[0046] FIGS. **5**A and **5**B are schematics of a preferred embodiment of the analyte collector equipped with a real-time sensor suitable for in situ detection of analytes concentrated from groundwater;

[0047] FIGS. **6**A and **6**B are schematics of in-well purging using a multi-channel, variable-speed pump in combination with two inflatable liners to prevent discharged groundwater from reentering the sampling zone. Purged water may be discharged in the screened zone (A) or into the well casing (B); and

[0048] FIG. **7** is a schematic of in-well purging using a multi-channel, variable-speed pump in combination with a long discharge line several feet in length to transport purged groundwater away from the sampling zone.

DETAILED DESCRIPTION AND PREFERRED EMBODIMENTS

[0049] The devices and methods provided herein offer significant benefits over currently available techniques for groundwater and surface water collection including, but not limited to, (i) generating time integrated samples; (ii) limiting the amount of waste generated; (iii) allowing for a standardization of sample information collected by traditional methods and the methods provided herein; (iv) allowing for the collection of multiple samples preserved for analysis of individual analytes of interest; (v) improving the limit of detection for analytes of interest; (vi) allowing for the preservation of liable sample constituents in situ; (vii) concentrating and compartmentalizing analytes of interest in situ, and (viii) through the concentration and compartmentalization step, allowing for the detection of analytes in situ through real time sensing technology.

[0050] The time interval between collection of the sample and testing of the sample can alter the sample in traditional water collection methods. For example, as the sample is brought from the site of collection in the subsurface to the ground surface, the pressure changes. This changes the solubility of gases such as carbon dioxide, and thus potentially the pH of the water. Changes in pH are coupled to changes in the solubility of the analytes which therefore may affect the accuracy and precision of the analysis. Intrusion of gases, particularly oxygen, is an important limitation of traditional samples and collection methods. Oxygen may enter into the volume of water sampled during pumping, during the lift to the ground surface, at the ground surface, during shipment of the sample, or during handling in the analytical lab. Although the sample can be packaged in a way to expel all of the air in the container, oxygen and other dissolved gases are typically present in the sample which can react with various analytes in the sample. Further, although the sample can be degassed, this can also result in changes in the analytes present in the sample.

[0051] Binding of the analyte(s) to a solid matrix using the devices and methods of the instant invention stabilize the analyte(s). As a substantial portion of the water has been removed from the analyte, effects of moving the sample are substantially minimized, if not removed. This allows for improved integrity of the sample(s) resulting in greater accuracy and precision in sample analysis. Methods of the invention further include the use of preservatives and/or reactants to stabilize certain analytes or generate stable reaction products. Such preservatives can be liquid or gas, or a combination thereof. Selection of such a preservative or reactant would be dependent on the analyte to be preserved. Appropriate preservatives and reactants can be selected by those of skill in the art.

[0052] The advantages provided by the devices and methods of the invention include: (i) the use of a submersible multi-channel pump in conjunction with non-aqueous collection matricies, solid phase extraction cartridges, and similar devices to concentrate the analyte(s) of interest in the solid phase, thereby eliminating the need for retrieval, transport, analysis, and disposal of large amounts of water during monitoring activities; (ii) use of a submersible multi-channel pump in conjunction with inflatable liners for in-line purging without generation of purge water above the surface; (iii) use of in situ analyte concentration in conjunction with real time sensing technology; and (iv) analysis arrays allowing for the determination of concentrations of multiple analytes in discrete channels using analyte-specific preservation techniques, concentration steps, and sensing technology.

[0053] The devices, systems, and methods provided herein may be used to compare to or replace traditional grab sampling (time-discrete sampling) with time-integrated sampling, thereby eliminating uncertainty as to the occurrence and impact of temporal water quality changes. This type of sampling is especially valuable in sampling locations that are under the influence of tidal water movement. The concentration and/or capture of analytes on solid matricies eliminates the need for costly transport and disposal of water samples. The functionality of concentrating analytes over time in an analyte collector results in improved detection limits, allowing for the detection of lower concentrations of analyte(s) in original samples by concentration of analyte(s) using solid matricies. The use of solid matricies to capture analyte(s) permits in situ testing and/or sensing of analyte(s) in a sample without removing the sampling device from the site of sample collection.

[0054] Presently available devices and methods for sample collection are limited by the amount of water that can be stored and transported from the source and to a laboratory for analysis. Currently available devices can collect about 1 L to about 4 L samples.

[0055] The apparatuses, systems, and methods of the invention provide for the collection of "dry samples." In other words, the analytes of interest contained in a volume of water

predetermined by the flow rate set at the multi-channel pump, rather than the size of the fluid container, are transferred from the dissolved in the fluid phase to the sorbed phase or simply trapped in a non-aqueous collection matrix. Transfer of the analyte from the water onto a solid non-aqueous collection matrix eliminates the need to retrieve the water itself. As a result, there is no need to ship large amounts of liquids, which is a costly undertaking and difficult given the new restrictions of transport of liquids on airplanes and other carriers. The collection of "dry samples" reduces analysis costs and eliminates the need of disposing of large volumes of liquid hazardous waste as the fluid is not removed from the original site.

[0056] Briefly, the schematic in FIG. **1** shows the deployment of the sampling device in a groundwater well. The device includes a multi-channel pump and various analyte collectors. Upon deployment of the device in the screened interval of a given groundwater monitoring well, the multi-channel pump is turned on. The pump then delivers a known and pre-set volume of water per unit time through inert tubing to an array of analyte collectors. The analyte collectors, shown in FIG. **2**, consist of a capsule or module containing a medium suitable for trapping a specific analyte of interest, e.g., lead (Pb), chromium (Cr), or organic contaminants of concern. Selective trapping of the analyte(s) of interest simultaneously in multiple parallel channels, shown in FIG. **3**, is achieved using techniques including solid phase extraction (SPE), ion exchange resins, affinity chromatography resins, molecular imprinting resins, etc., shown in FIG. **4**. If desired, the pre-concentrated analytes can be assayed in situ using real-time sensing technology, as shown in FIG. **5**.

[0057] Water is delivered by the pump for a period sufficient to contact between 10 mL and greater than 100 L of water with the analyte collector. Sampling periods may vary from a few seconds to days, weeks or several months. Resultant flow rates thus can vary from one or more liters per minute to 1 milliliter per day. Filtration material placed between the water intake and the analyte collector can remove microorganisms to prevent in situ degradation of analytes of interest. Water that has passed through the sample collector is discharged either above or below the sampling zone as shown in FIG. **3**. Inflatable liners may be used to prevent water that has passed through the device from reentering the sampling zone as shown in FIG. **6**.

[0058] Similarly, the inflatable liners also may be used to isolate the sampling zone during high flow in-well purging. This in-well purging process offers great utility. First, it prevents the generation at the surface of large volumes of water that have to be disposed of as hazardous waste. Second, by isolating a region in the well from the upper atmosphere via the use of the inflatable liner, atmospheric gases are precluded from entering the sampling zone. This prevents the accidental oxygenation of water which is known to cause artifacts in chemical analysis of redox sensitive species. Also, since the well casing does not need to be completely evacuated, as is often the case in wells of low productivity, water cannot cascade down in the screened interval which again would result the potential reoxygenation, outgassing, and other sampling artifacts having detrimental effects on the water chemistry and analysis. During in-well purging, unwanted pure water also can be discharged far away from the sampling zone via use of a discharge line in lieu of, or in combination with, inflatable liners such as those shown in FIG. **6**. Upon termination of the sampling period, the device is retrieved and the loaded cartridge or cartridge containing the non-aqueous collection matrix suitable for trapping a specific analyte of interest can be shipped to laboratories for analysis.

[0059] FIG. **1** is a schematic of a device of the invention deployed for the collection of groundwater. The device **1** attached to a tether **3** is lowered into a groundwater monitoring well **5** drilled into an aquifer **7**. The tether is appropriately attached to the device so that the device will be appropriately oriented in the well. The opposite end of the tether **3** is attached to a structure **9** on the surface to retain the device **1**, wherein the structure can include a control system. When attached to a control system, the tether typically includes wires, cables such as fiber optic cables, or other components to transmit information from the device to the control system. In an alternative embodiment, the tether is predominantly or purely structural to retain the device at the desired position and information from the device is transmitted wirelessly to a control system either at or near the well, or at a remote location. The groundwater level is indicated by the downward pointing arrowhead **11**.

[0060] FIG. **2** is a schematic of a device **1** of the invention. The device is enclosed in a casing **101** which includes a water intake zone **103** operably linked to a reservoir, preferably a multi-compartment reservoir **105** for collection of groundwater between the water intake zone and a pump. Such a reservoir can be useful for the collection of a time discrete sample before, after, or during the time interval sample collection by segregating the time discrete sample from the time integrated sample, or for partitioning the time integrated sample into multiple identical wells to allow the sample to be drawn into one or more channels of the pump **107**. The pump is preferably a multi-channel pump. Each of the one or more channels of the pump **109** and **109'** is operably joined to a first end of a corresponding non-aqueous collection matrix cartridge **111** and **111'**. The specific size and identity of the non-aqueous collection matrix in each of the cartridges depends on the type and amount of sample to be collected, the binding capacity of the non-aqueous collection matrix, and other considerations well known to those of skill in the art. The amount of extraction matrix may vary from 1 mg to 10 or even 100 grams based on the specific application; this range of sorbent materials allows sampling of water volumes ranging from 1 ml to 1 L to hundreds or even thousands of liters. In a preferred embodiment, duplicate or triplicate cartridges of the same non-aqueous collection matrix are present in the device to act as controls. Alternatively, or additionally, non-aqueous collection matricies that bind the same analyte based on different binding interactions can also be used as a control. The second end of the corresponding non-aqueous collection matrix cartridge if operably attached to a conduit **113** and **113'** such as a rigid tubing to discharge the water above or below the sampling zone after being passed through the non-aqueous collection matrix cartridge. A screen extending beyond the height of the device is represented by **115**. One or more filters or membranes can be incorporated into the device to prevent clogging of the non-aqueous collection matrix cartridge, e.g., between the pump and the cartridge to provide sufficient pressure to push the sample through the membrane. Such filters and membranes are well known to those of skill in the art.

[0061] FIGS. **3**A and B provide a schematic of the device of the invention in use. Groundwater enters the device **1** through the water intake zone **103**. Water is collected in the multi-channel reservoir **105** for the desired time period, either short or long, and then the pump **107** is used to apply the sample to the non-aqueous collection matrix cartridges **111** at the

appropriate flow rate. The separation process is demonstrated schematically. The reservoir includes spots of four different shades of gray. After passing through the pump and contacting the non-aqueous collection matrix columns **111**, each of the columns has turned the same the same shade of gray as one of the spots, representing that each column binds a specific analyte. As in the previous figure, the water from the columns is discharged either above of below the sampling zone to prevent contamination of the sample. It is understood that some types of non-aqueous collection matricies can bind more than one analyte.

[0062] FIGS. **4**A and B provide a schematic of an individual non-aqueous collection matrix column **111** that binds a single analyte. Prior to exposure to the sample, the non-aqueous collection matrix includes multiple empty analyte binding sites **301**. After contacting the non-aqueous collection matrix with the sample **303**, the analyte **305** that specifically binds the non-aqueous collection matrix is bound to the non-aqueous collection matrix in the column. The analytes or other components of the sample that do not bind the non-aqueous collection matrix **307**, passes through the column without binding to the non-aqueous collection matrix.

[0063] FIGS. **5**A and **5**B show an embodiment of the invention wherein a real time sensor **401** is attached to the non-aqueous collection matrix column **403** to allow for detection of the analyte **405** bound to the column. In the embodiment, the real time sensor is further connected, with **407** or without wires, to a data logger to record the presence of the analyte bound to the sensor. Data can be sent to the data logger at timed intervals, continuously, upon a certain event such as saturation of the column. In an embodiment, a real time sensor can be used to analyze the flow through **409** that does not bind to the column.

[0064] FIGS. **6**A and **6**B provide schematics of the device **501** of the invention deployed in well **503** for the collection of groundwater. The device **501** is attached to a tether **505** that can be used to lower the device into the well and adjust the height of the device in the well. The tether can also include wires, cables, or other transmission devices to allow for communication between the device and the surface. Upper **507** and lower **509** inflatable liners are in the well above and below the device, respectively. Water is discharged from the device into the well distal to the liners either above the upper liner **511** or below the lower liner **513**. The liners prevent discharged water from reentering the well at the sampling site, but do not prevent transport of groundwater into the well from the sides of the well. The well can further include a screened interval **515** for the removal of particulates from the groundwater to prevent clogging of the pump and/or the columns. The inflatable liners can be present in the well in the screened interval or outside of the screened interval. Alternatively, screens can be included in the water intake zone of the device. Appropriate screens and their methods of use are well known to those of skill in the art.

[0065] FIG. **7** provides a schematic of an in well purging using the pump in the device of the invention **601** attached to a tether **603** in a well with a screened interval **605**. The device is operably connected to a long discharge line in the well **607** that extends beyond the length of the screened interval **605** in the embodiment shown. In an embodiment, one or more inflatable liners can be present in the well (not shown). The required length of the discharge line **607** is a function of the inner diameter of the borehole, the volume of water sampled and the retention time of water in that zone. The convective flow of water through the well screen and bore hole replaces the water in the well to be collected by the device. If the void volume between the discharge point and the pump intake is less than the water volume sampled, there will potentially be short-circuiting and repeated sampling of the same water. This is particularly true if the water is stagnant and does not get replaced through natural convective flow. The volume of the water column between the end of the discharge line **607** and the water intake can be calculated using the following formula:

Volume of water collected [cm^3]=(radius of the well [cm])*(radius of the well [cm])*π*length of 607 [cm],

[0066] Where it is ~3.14, and the radius of the well is half the inner diameter of the monitoring well. The specific minimum length of the discharge line to be used can be determined by one of skill in the art depending on the specific circumstances of the well in which collection takes place.

[0067] The use of a long discharge line can abrogate the need for the use of one or more liners in the well. However, it is possible to use the device of the invention with a long discharge line in conjunction with one or more liners in the well. In an alternative embodiment, the discharge line is sufficiently long to allow for discharge of the water distal to the liner.

[0068] Although the figures and specific embodiments provided herein are related to methods for use with groundwater, the device can also be used for the collection of surface water samples with the appropriate modifications. For example, when samples are collected from open water, the use of liners or other devices to partition off the water to be tested can be difficult if not impossible to use. However, the device of the invention can be used, for example, to obtain samples in moving water, e.g., river or stream, or a body of water adjacent to a river or stream, wherein the water is discharged from the device sufficiently downstream to prevent contamination of the sampling area. In an embodiment, the sample after passing through the device of the invention could be collected in a water tight container and subsequently returned to the sample source. Such modifications are well within the ability of those of skill in the art.

[0069] The components of the device, particularly the connector fluid lines between the intake zone, the reservoir, the pump, and the cartridges, as well as after the cartridges to remove waste, are easily interchangeable. For example, the connector fluid lines can be connected to the various components using bayonet connectors, rapid release connectors, quick connectors, screw connectors, compression connectors, luer locks or other connectors such that one or more of the fluid lines can be easily replaced or exchanged depending on, for example, the flow rate through the fluid lines or the analytes to be detected in the sample. For example, some analytes may stick to or corrode specific types of fluid connectors, i.e., plastic tubing. The selection of the specific material for the fluid lines of the device is a matter of choice and within the ability of one of skill in the art.

[0070] Further, the specific non-aqueous collection matricies in the cartridges and the volume of the cartridges will depend on the analytes to be collected and the volume of water to be tested. The end user will also consider the number of cartridges to be used in the device at a single time. For example, if a small number of specific analytes are to be detected, e.g., after a known chemical spill, a few larger capacity non-aqueous collection matrix cartridges may be preferable for use in the device and methods of the invention

as they typically provide a higher flow rate, shorter collection times, and a higher binding capacity. However, if a new site is being assessed that may have multiple known and unknown contaminants, it may be advantageous for a large number of smaller capacity non-aqueous collection matrix cartridges to be used to allow for the detection of a broader selection of analytes. Such considerations are well understood by those of skill in the art. The specific number and types of non-aqueous collection matrix cartridges used in the device and methods of the invention is not a limitation of the invention.

[0071] In certain applications of the invention, it is necessary to employ paired columns as the detection of two analytes is required to determine the level of each. For example, nitrate and nitrite levels must be detected in the same sample. Similarly, the determination of the total concentration of metals may be desirable by tracking in parallel the relative concentrations of different redox species. For example, the total concentration of dissolved iron can be determined by measuring FeII and Fe III in parallel, or the concentration of dissolved uranium can be determined by measuring UN and UVI in parallel.

[0072] The embodiments shown in the figures each have one non-aqueous collection matrix column attached to each fluid line from the pump. In an alternative embodiment, more than one cartridge can be attached to a single fluid line from the pump in series as long as contacting the sample with the first non-aqueous collection matrix does not alter binding of the second analyte to the second and possibly subsequent non-aqueous collection matrix(s), and the connection of the cartridges in tandem in a single line does not alter the flow rate through the cartridges. Such considerations are well understood by those of skill in the art.

[0073] The invention further provides kits including a device of the invention, or components of a device of the invention. For example, a kit can include the casing with a water intake zone, a reservoir, and a multi-channel pump. The kit can optionally include one or more types of tubing with appropriate connectors for use in the devices or methods of the invention. The kit can include one or more types of non-aqueous collection matrix cartridges, optionally with appropriate tubing and connectors, for use in the devices and methods of the invention. A kit of the invention can include one or more types of non-aqueous collection matrix cartridges appropriately sized and/or with appropriate connectors for use in the devices or methods of the invention. Such a kit would be useful to an owner of the device. Other variations are well within the ability of those of skill in the art.

Example

Validation of Collection of Time Integrated Samples of Groundwater

[0074] The device and methods of the invention provide a new paradigm for sample collection. The methods of the invention need to be validated and compared to data obtained from traditional collection methods to allow for interpretation of data going forward using time integrated samples in comparison to time discrete samples previously collected. For the purpose of validation, some channels of the multi-channel pump can be directed towards sampling bladders (see FIG. **2**) that may be equipped with preserving chemicals (e.g., acids, bases). Captured in these bladders may be water collected slowly over time, e.g., for several days, or drawn quickly at a single discrete time, preferably at the beginning and/or the end of the sampling period, by use of a high-flow rate delivered by the multi-channel pump. All three sampling strategies can be used at a single site to provide the following samples:

[0075] 1. A traditional water sample, drawn using a multi-channel pump at the beginning of the sample period by the use of a high-flow rate delivered by the multi-channel pump;

[0076] 2. A traditional water sample, drawn using a multi-channel pump at the end of the sample period by the use of a high-flow rate delivered by the multi-channel pump;

[0077] 3. A time-integrated water sample, drawn using a multi-channel pump over the entire sampling period by using a low-flow rate delivered by the multi-channel pump; and

[0078] 4. A dry sample of a specific analyte collected over time in an analyte collector, using the flow rate described in #3.

A comparison of the results obtained from the analysis of the four samples can demonstrate the impact of discrete vs. time-integrated sampling (comparison of 1, 2, and 3), and an evaluation of the analyte concentration efficiency offered by the "dry sample" (comparison of 3 and 4). Similarly, one can test and validate the use of various sample preservation strategies, with the ideal result being that use of a specific preservative that produces indistinguishable results for samples derived by the methods of 3 and 4. Upon validation of the methods, shipment of dry samples will take place in lieu of shipment of fluid samples for laboratory analysis.

[0079] Those skilled in the art will recognize, or be able to ascertain using no more than routine experimentation, many equivalents to the specific embodiments of the invention described herein. Such equivalents are intended to be encompassed by the following claims.

[0080] All references, patents, and patent publications cited herein are incorporated herein by reference

1. A method of collection of a dry sample comprising contacting a non-aqueous collection matrix with a ground water sample in situ wherein the sample comprises or is suspected of comprising an analyte that binds the non-aqueous collection matrix.

2. The method of claim **1**, further comprising:

providing a device comprising:

a casing comprising a water intake zone wherein the casing encloses,

a pump, and

a non-aqueous collection matrix cartridge,

wherein the non-aqueous collection matrix cartridge is operably linked to a waste water conduit, and

wherein the water intake zone, the pump, the non-aqueous collection matrix cartridge, and the waste water conduit are all operably linked in sequence;

contacting the water intake zone with a fluid sample such that the fluid sample sequentially enters the pump, the non-aqueous collection matrix cartridge, and the waste water conduit wherein the fluid sample is suspected of containing at least one analyte for binding to the non-aqueous collection matrix cartridge thereby collecting a dry sample.

3. The method of claim **2**, wherein the non-aqueous collection matrix cartridge comprises a plurality of non-aqueous collection matrix cartridges.

4. The method of claim **3**, wherein each of the plurality of non-aqueous collection matrix cartridges bind the same analyte.

5. The method of claim **3**, wherein the plurality of non-aqueous collection matrix cartridges bind a plurality of analytes.

6. The method of claim **2**, wherein the device is present in a ground water well in a saturated aquifer.

7. The method of claim **5**, wherein the ground water well comprises a screened interval.

8. The method of claim **6**, wherein the ground water well comprises an inflatable liner either above or below the device.

9. (canceled)

10. The method of claim **8**, wherein the waste water conduit empties distal to the inflatable liner in the well.

11. The method of claim **2**, wherein the device further comprises a real time sensor operably linked to a non-aqueous collection matrix cartridge.

12. The method of claim **11**, further comprising collecting data regarding analyte binding from a real time sensor operably linked to the non-aqueous collection matrix cartridge.

13. The method of claim **2**, wherein the water intake zone is contacted with a fluid sample for about 1 second to about 1 year.

14. The method of claim **13**, wherein the water intake zone is contacted with a fluid sample for about 1 minute, about 1 hour, about 1 day, about 1 week, about one month, about 3 months, about 6 months.

15. The method of claim **2**, further comprising an in well purge comprising purging a device further comprising a length approximated by a formula:

Volume of water [cm^3]=(radius of the well [cm])*(radius of the well [cm])*π*length of discharge line 607 [cm],

wherein π is ~3.14, and the radius of the well is half the inner diameter of the monitoring well.

16. A dry sample prepared by a method of claim **1**.

17. A device comprising:

a casing comprising a water intake zone wherein the casing encloses,

a pump, and

a non-aqueous collection matrix cartridge,

wherein the non-aqueous collection matrix cartridge is operably linked to a waste water conduit, and

wherein the water intake zone, the fluid reservoir, the pump, the non-aqueous collection matrix cartridge, and the waste water conduit are all operably linked in sequence.

18. The device of claim **17**, further comprising a tether.

19. The device of claim **18**, wherein the tether operably links the device to a control system.

20. The device of claim **17**, wherein the pump is a multi-channel pump.

21. The device of claim **17**, wherein the non-aqueous collection matrix cartridge comprises a plurality of non-aqueous collection matrix cartridges.

22. The device of claim **21**, wherein each of the plurality of non-aqueous collection matrix cartridges all bind the same analyte.

23. The device of claim **21**, wherein the plurality of non-aqueous collection matrix cartridges bind a plurality of analytes.

24. The device of claim **17**, wherein the device further comprises a real time sensor operably linked to a non-aqueous collection matrix cartridge.

25. The device of claim **17**, wherein the device further comprises a discharge line comprising a length approximated by a formula:

Volume of water [cm^3]=(radius of the well [cm])*(radius of the well [cm])*π*length of discharge line 607 [cm],

wherein π is ~3.14, and the radius of the well is half the inner diameter of the monitoring well.

26. A kit comprising instructions for use of a device of claim **18** and one or more components selected from the group consisting of

a casing comprising a water intake zone, a pump, a non-aqueous collection matrix cartridge, a waste water conduit, and connector tubing.

27. The kit of claim **26**, comprising two or more of the components listed.

28. The kit of claim **26**, comprising three or more of the components listed.

29. A kit comprising a plurality of non-aqueous collection matrix cartridges for use with the method of claim **1** and instructions for use.

30. The method of claim **2** further including a fluid reservoir operably linked to the pump.

31. The device of claim **17**, further comprising a fluid reservoir.

32. The kit of claim **26**, further comprising a fluid reservoir.

* * * * *

Appendix C: US 2013/0040290 A1, "Methods and systems for ultra-trace analysis of liquids"

This page intentionally blank.

US 20130040290A1

(19) United States

(12) Patent Application Publication

Halden

(10) Pub. No.: US 2013/0040290 A1

(43) Pub. Date: Feb. 14, 2013

(54) **METHODS AND SYSTEMS FOR ULTRA-TRACE ANALYSIS OF LIQUIDS**

(75) Inventor: **Rolf U. Halden**, Phoenix, AZ (US)

(73) Assignee: **Arizona Board of Regents Acting for and on behalf of Arizona State University**, Scottsdale, AZ (US)

(21) Appl. No.: **13/695,395**

(22) PCT Filed: **May 4, 2011**

(86) PCT No.: **PCT/US11/35255**

§ 371 (c)(1), (2), (4) Date: **Oct. 30, 2012**

Related U.S. Application Data

(60) Provisional application No. 61/331,482, filed on May 5, 2010.

Publication Classification

(51) **Int. Cl.**

G01N 1/10	(2006.01)
C12M 1/34	(2006.01)
C12Q 1/14	(2006.01)
C12Q 1/70	(2006.01)
C12Q 1/04	(2006.01)

(52) **U.S. Cl.** **435/5**; 435/34; 435/36; 435/287.1; 73/64.56

(57) **ABSTRACT**

A monitoring assembly (**201**) with an intake (**213**) has at least one pump (**210**) featuring at least one pump channel mounted in the monitoring assembly (**201**). A plurality of fluid lines are coupled to the at least one pump (**210**). At least one filter cartridge (**315**) is also mounted in the assembly. Each filter cartridge (**315**) is separately coupled by one of the plurality of fluid lines to one of the pump channels, where each filter cartridge (**315**) contains material for extracting an analyte, and where the at least one pump operates to separately push fluid through the at least one filter cartridge (**315**). The filter cartridge (**315**) operates to separate fluid into constituent parts.

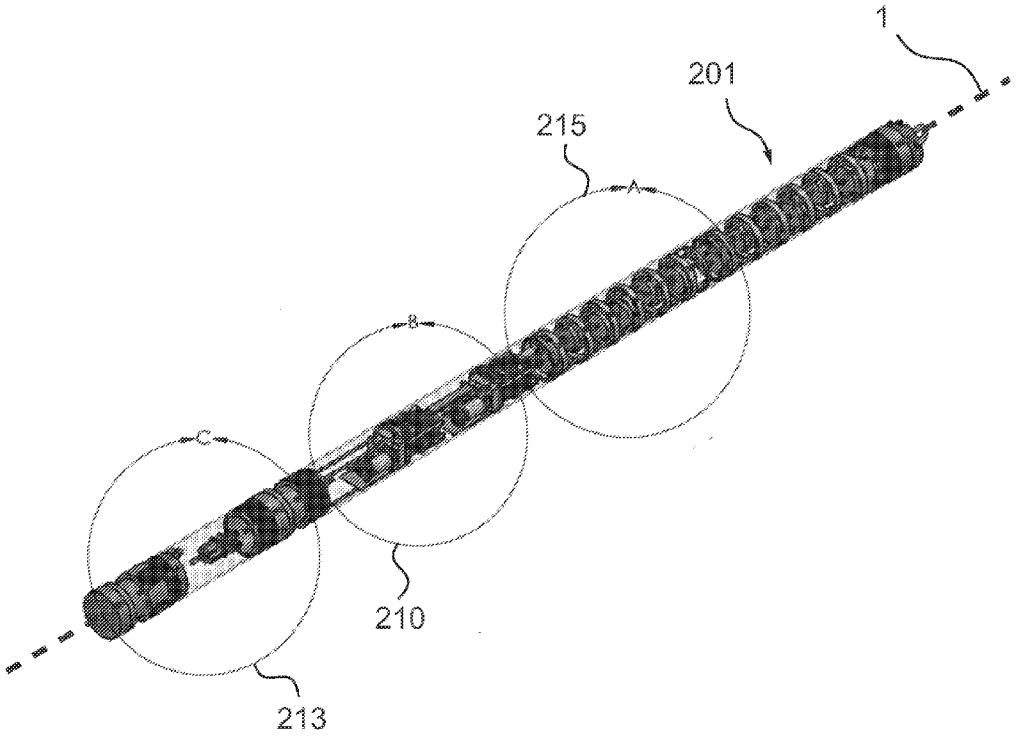

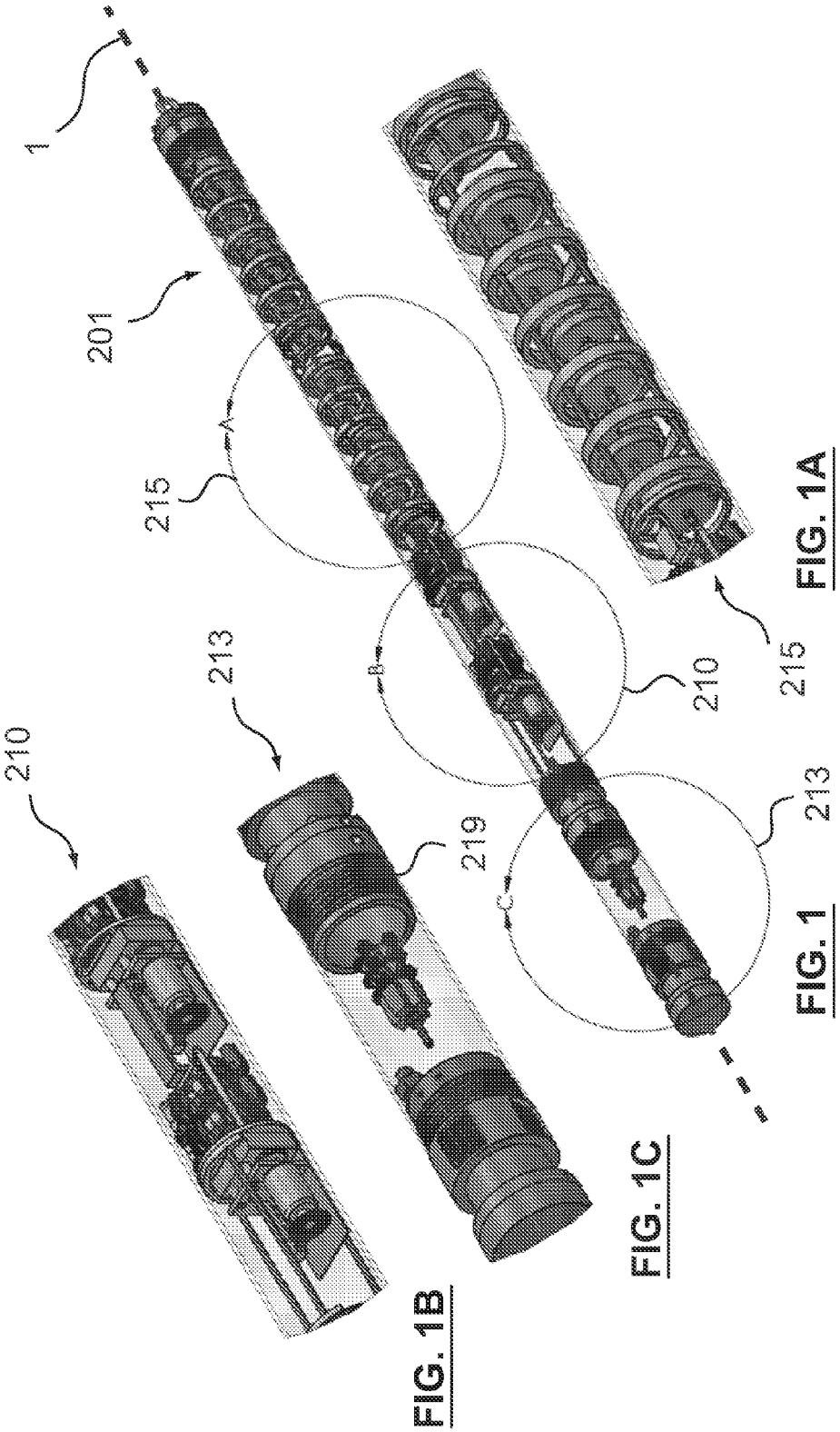

FIG. 1

FIG. 1A

FIG. 1B

FIG. 1C

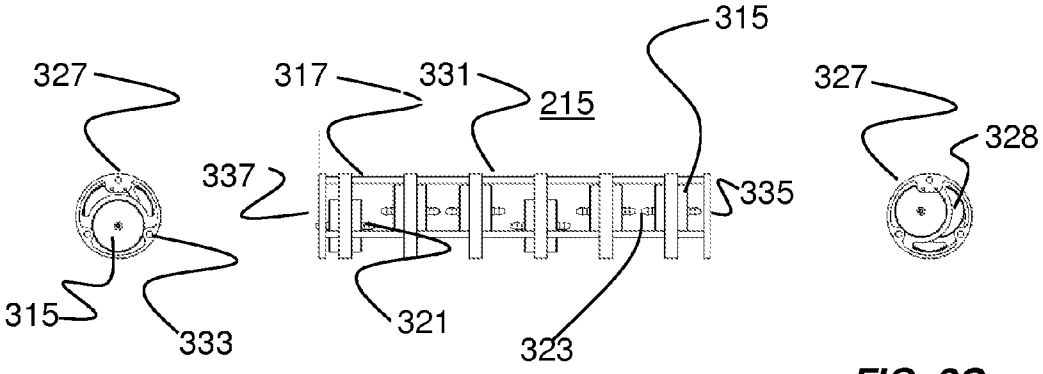

FIG. 2A

FIG. 2B

FIG. 2C

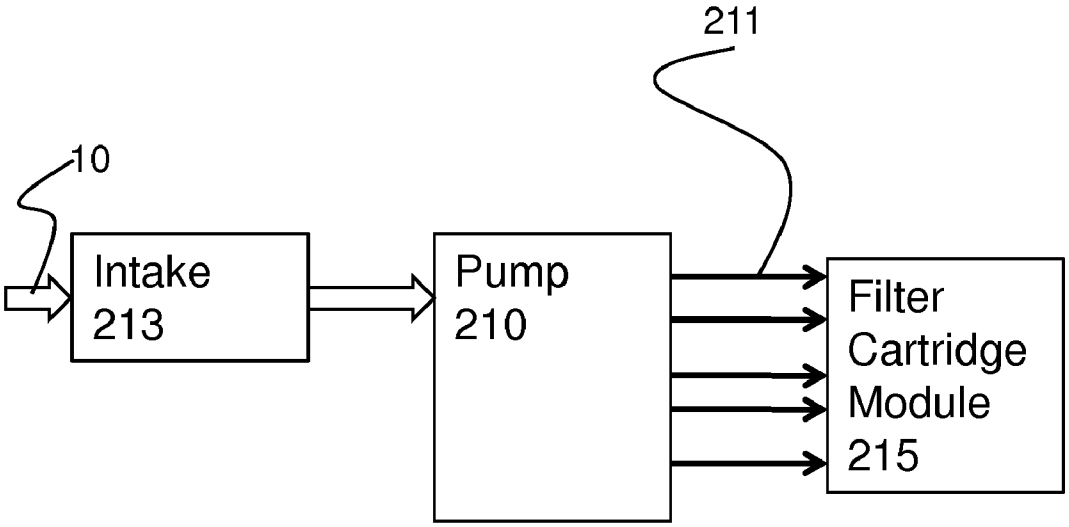

FIG. 2D

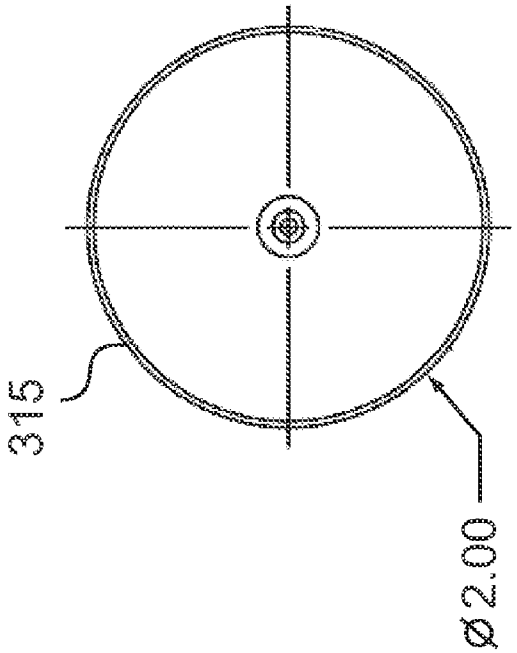

FIG. 3B

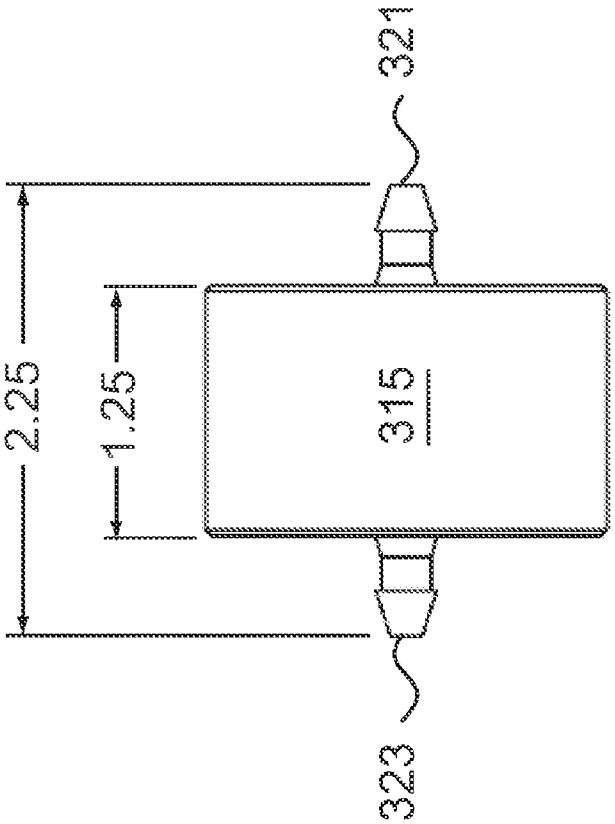

FIG. 3A

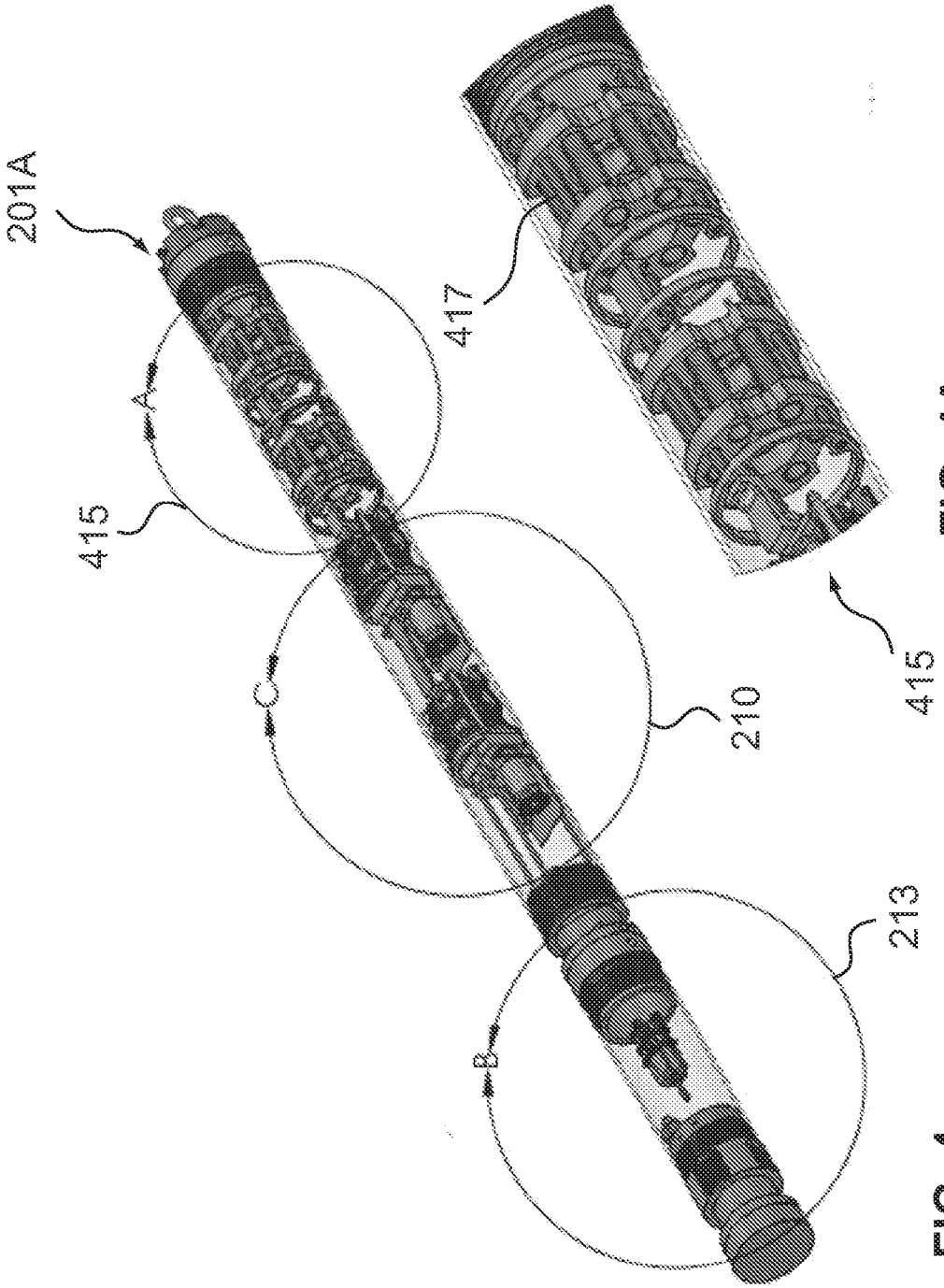

FIG. 4

FIG. 4A

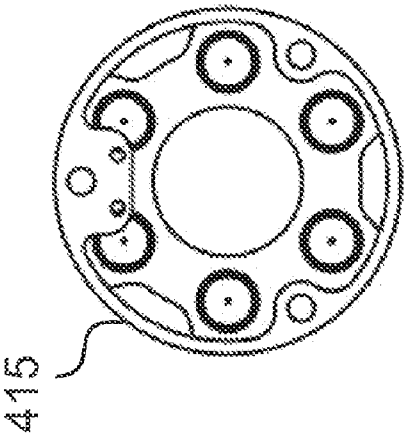

FIG. 5B

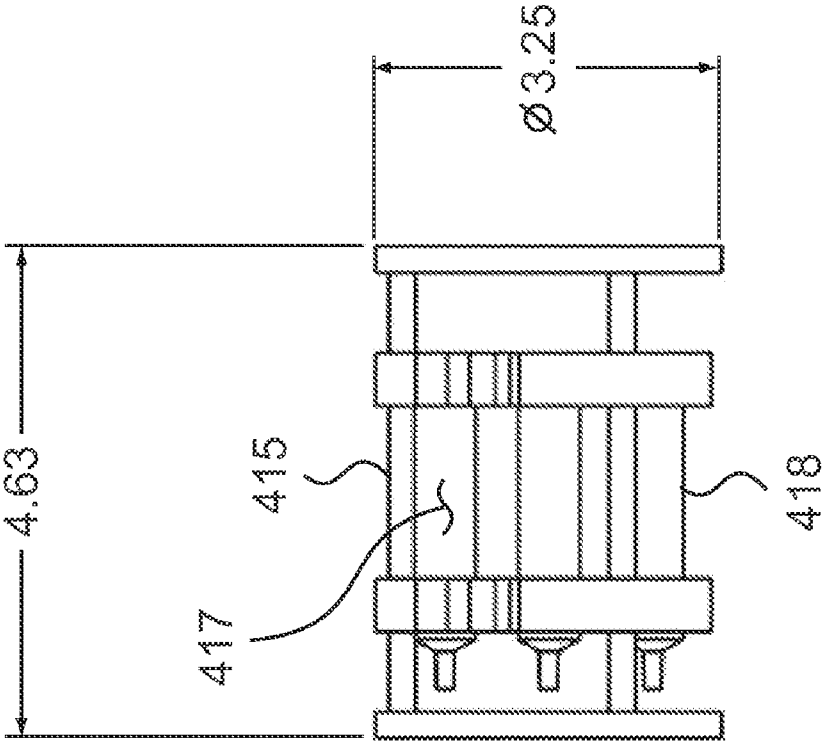

FIG. 5A

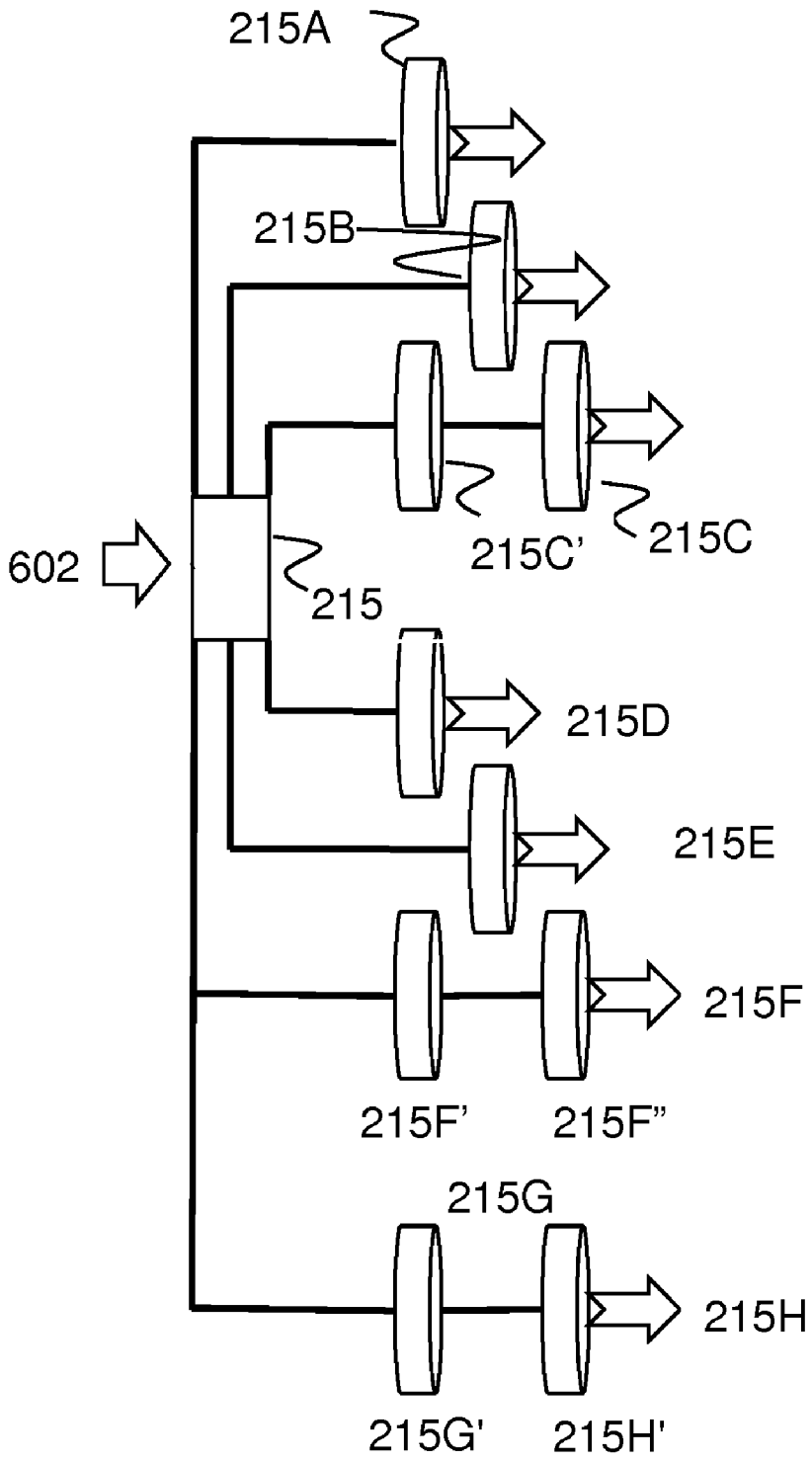
215A
215B
602
215
215C'
215C
215D
215E
215F
215F'
215F"
215G
215H
215G'
215H'

FIG. 6

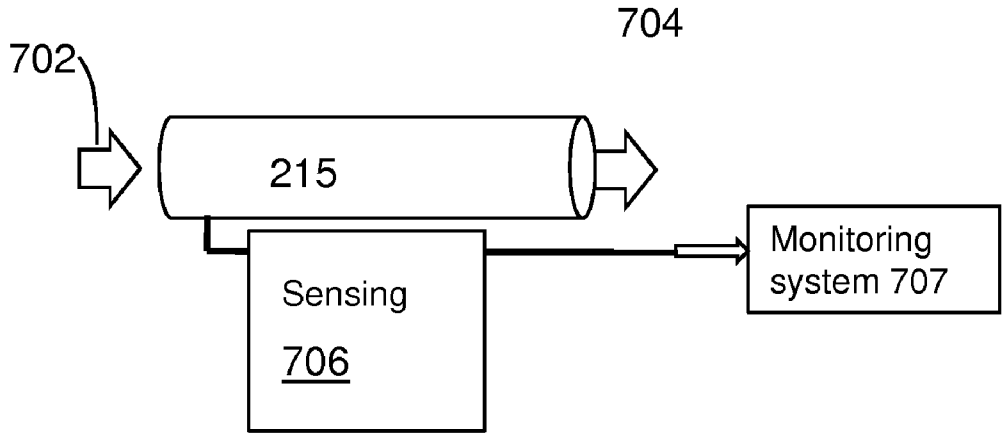

FIG. 7

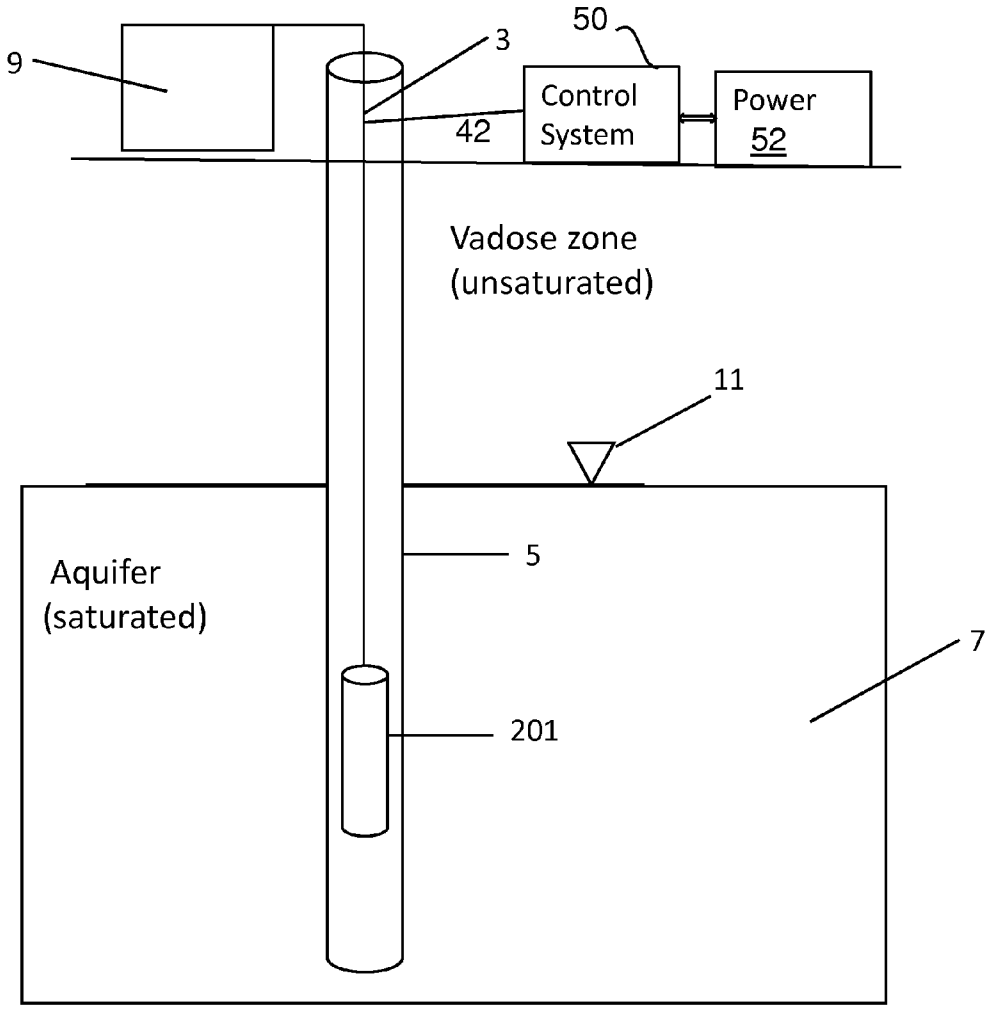
9
3
50
Control System
Power
52
42
Vadose zone
(unsaturated)
11
5
Aquifer
(saturated)
7
201

FIG. 8

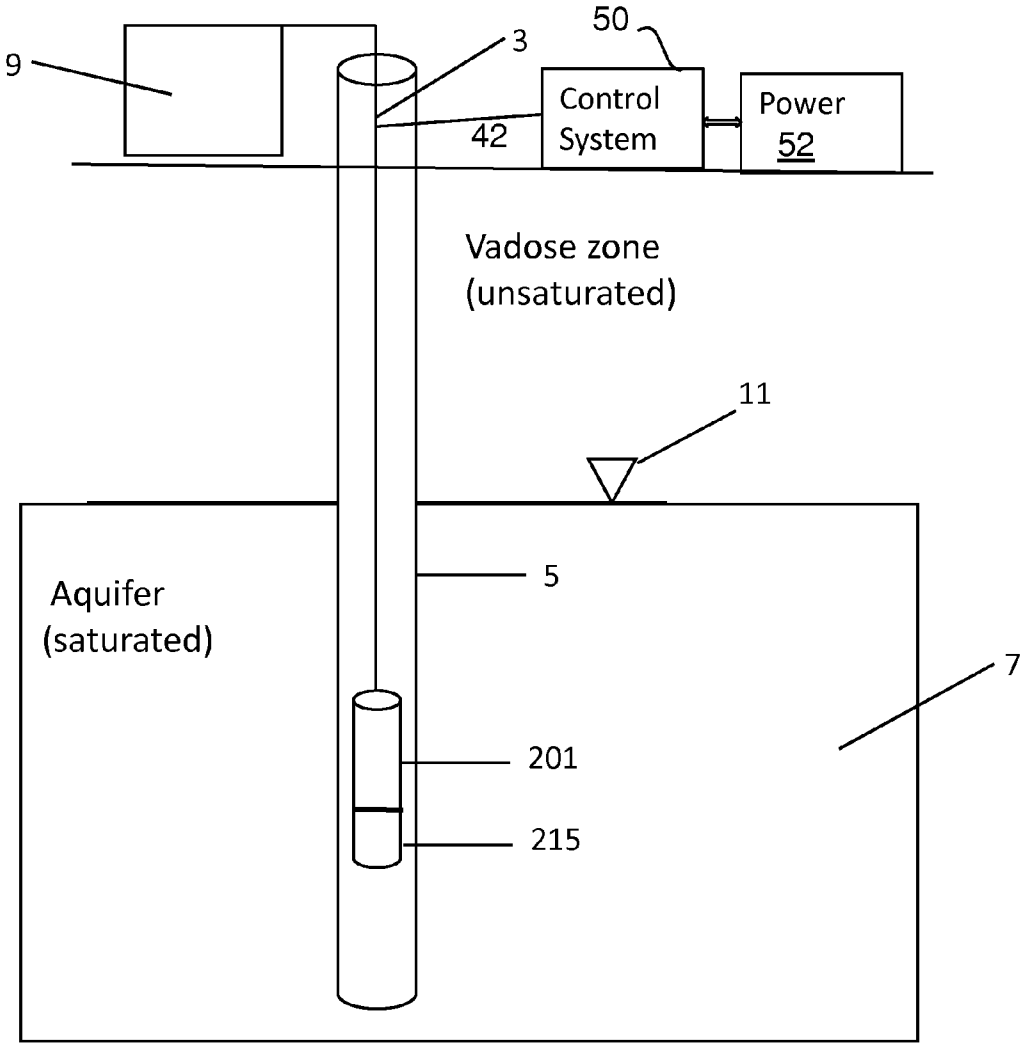
9
3
50
Control System
Power
52
42
Vadose zone
(unsaturated)
11
5
Aquifer
(saturated)
7
201
215

FIG. 9

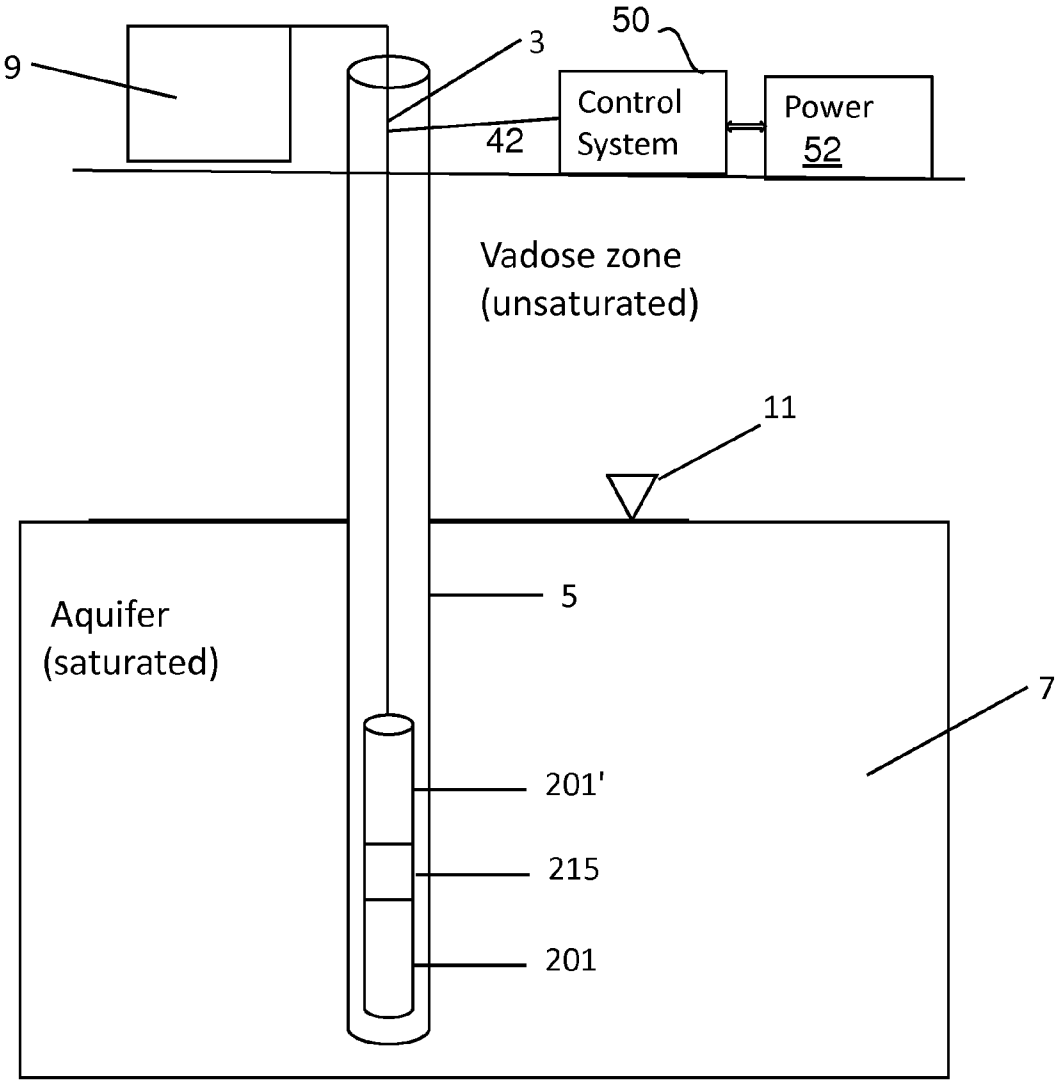
9
3
50
Control System
Power
52
42
Vadose zone
(unsaturated)
11
5
Aquifer
(saturated)
7
201'
215
201

FIG. 10

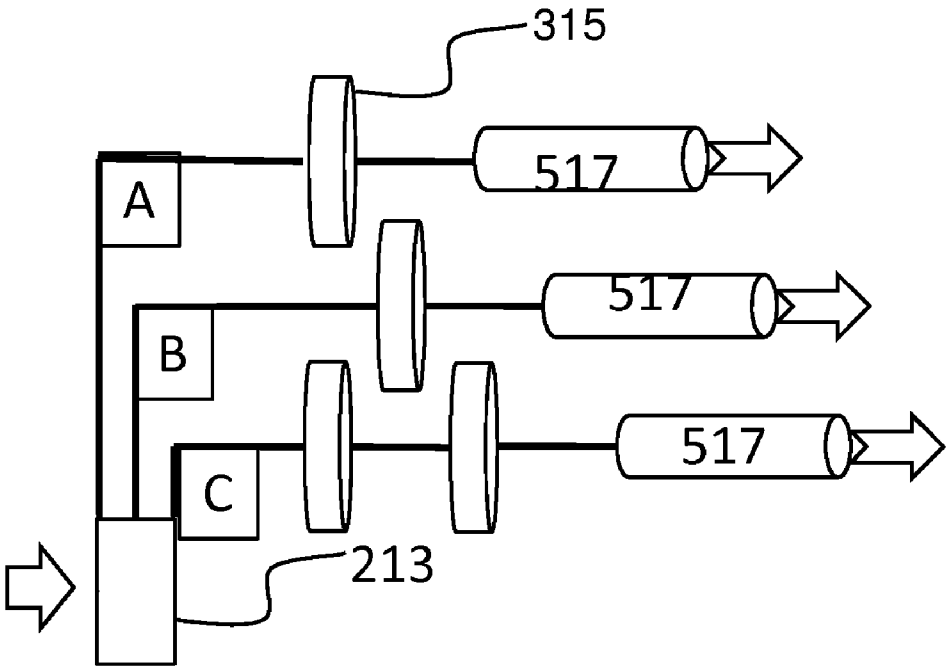

FIG. 11

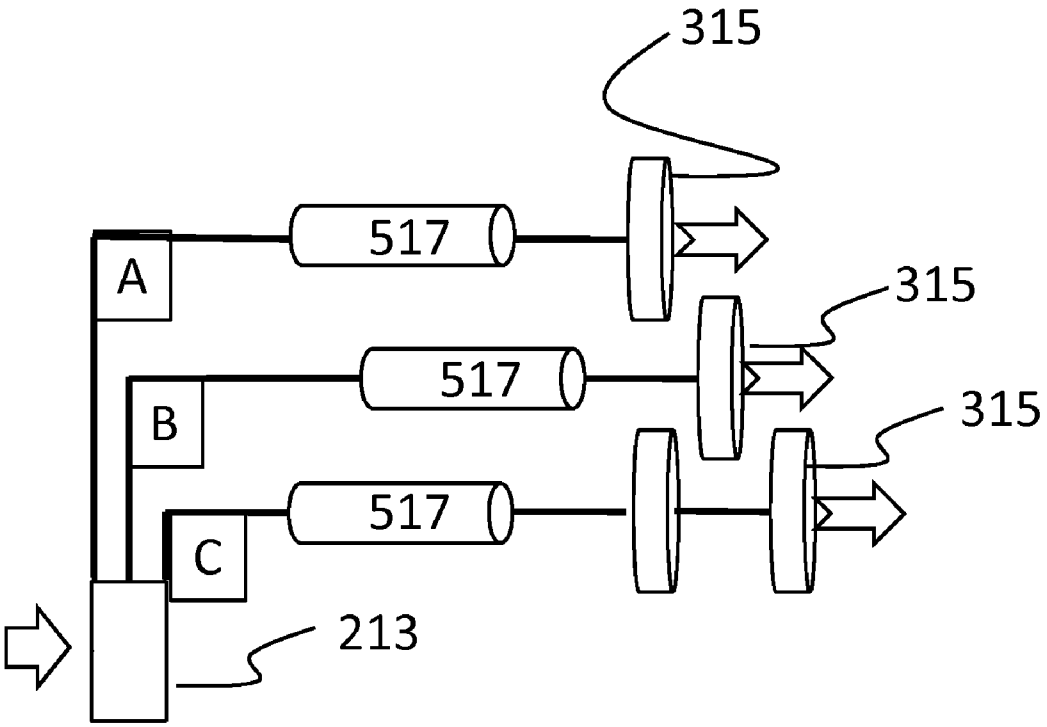

FIG. 12

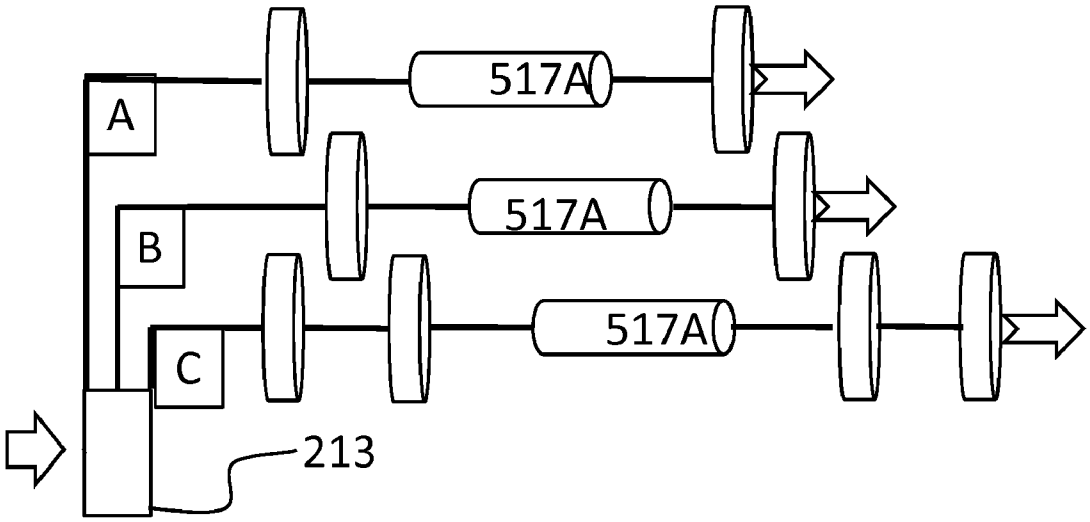

FIG. 13

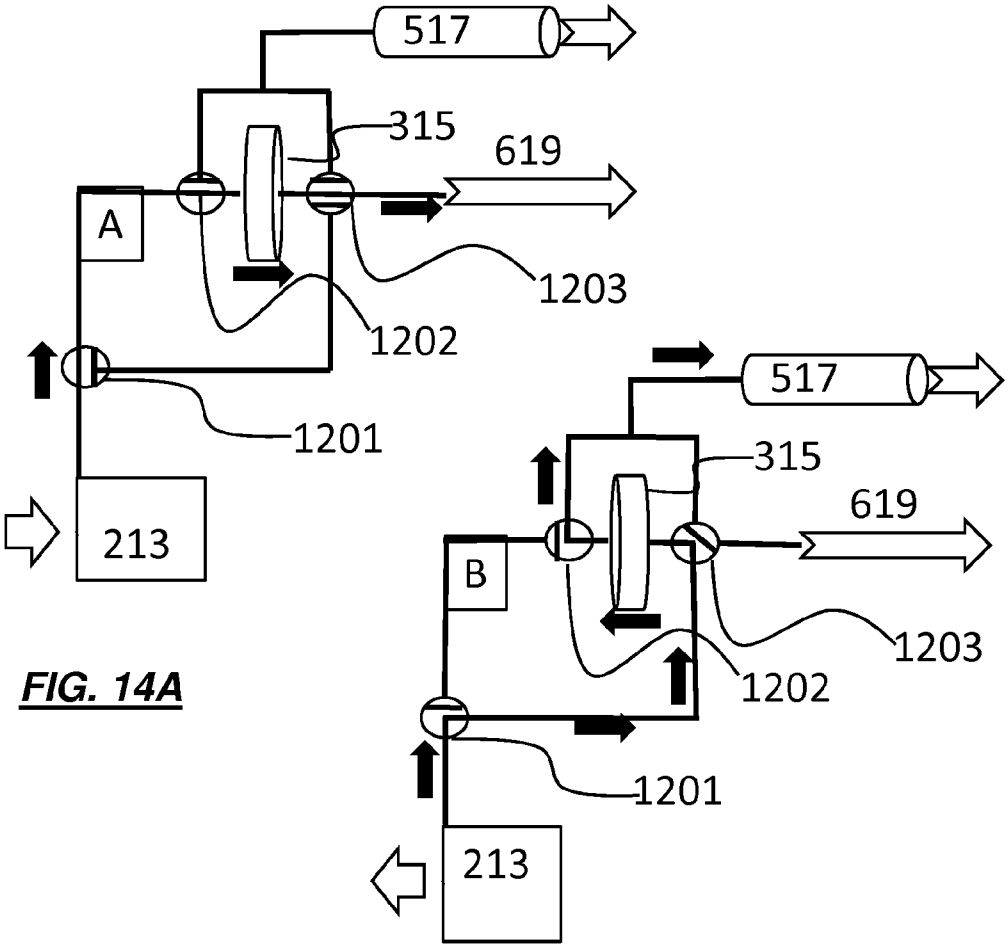

FIG. 14A

FIG. 14B

METHODS AND SYSTEMS FOR ULTRA-TRACE ANALYSIS OF LIQUIDS

[0001] This application claims the priority date of U.S. Provisional Application No. 61/331,482, filed May 5, 2010 and entitled "METHODS AND SYSTEMS FOR ULTRA-TRACE ANALYSIS OF LIQUIDS," the entire disclosure of which is incorporated by reference.

[0002] This application is also related to PCT International Patent Application No. PCT/US2009/01076 to Halden, filed Feb. 20, 2009, entitled "METHODS AND SYSTEMS FOR GROUND AND SURFACE WATER SAMPLING AND ANALYSIS," and published on Aug. 27, 2009 as WO2009/105241, which is incorporated by reference. The present invention is also related to U.S. patent application Ser. No. 12/702,033, filed Feb. 8, 2010 to Halden and entitled "METHODS AND SYSTEMS FOR FLUID EXAMINATION AND REMEDIATION." U.S. Ser. No. 12/702,033 is also incorporated by reference.

TECHNICAL FIELD

[0003] The present invention relates to engineering methods and systems enabling the use of advanced monitoring equipment for high-quality and ultra-sensitive analysis of liquid environments including groundwater monitoring wells. More particularly, the invention is directed to a system designed to capture and concentrate in a time-integrated fashion, ultra-low concentrations of dissolved and particulate materials present in liquid media (e.g., drinking water, surface water, groundwater, sea water).

BACKGROUND

[0004] Understanding the occurrence and movement of toxic chemicals and biological materials including microorganisms through liquid (e.g., aqueous) environments is essential for effective risk assessment and the protection of human health and the environment. The disclosed technology represents a major advance in environmental monitoring by enabling the cost-effective and ultra-sensitive detection of environmental contaminants of chemical and biological nature in natural and engineered waters.

[0005] As published in WO2009/105241, Halden, the inventor here, previously disclosed methods and kits for collection of dry samples from fluids such as ground, surface and tap water. Devices include a casing including a water intake zone wherein the casing encloses, a fluid reservoir, a pump, a non-aqueous collection matrix cartridge, and a waste water conduit, wherein the water intake zone, the fluid reservoir, the pump, the non-aqueous collection matrix cartridge, and the waste water conduit are all operably linked in sequence. However, that device required a multicompartment reservoir for collection of groundwater between the water intake zone and a pump.

[0006] The present disclosure represents an improvement over existing technologies by reducing to practice the concentration of chemical and biological contaminants from large-volume aqueous samples on low-volume extraction media that are integrated into field-deployable sampling devices for long-term, parallel sampling. As a further advance, there is no requirement for a multicompartment reservoir since, in some useful embodiments, the samples are concentrated and extracted into environmental/extraction cartridges.

BRIEF SUMMARY OF THE DISCLOSURE

[0007] This summary is provided to introduce a selection of concepts in a simplified form that are further described below in the Detailed Description. This summary is not intended to identify key features of the claimed subject matter, nor is it intended to be used as an aid in determining the scope of the claimed subject matter.

[0008] In one aspect, disclosed are methods and systems enabling the monitoring of chemical and biological constituents at hitherto unattainably low method detection limits. The technology can be used for environmental monitoring, tracking the progress and success of hazardous waste remediation, and for risk and exposure assessment.

[0009] In another aspect, a monitoring assembly with an intake has at least one pump featuring at least one pump channel mounted in the monitoring assembly. A plurality of fluid lines are coupled to the at least one pump. At least one filter cartridge, where each filter cartridge is separately coupled by one of the plurality of fluid lines to one of the pump channels, where each filter cartridge contains material for extracting an analyte, and where the at least one pump operates to separately push fluid through the at least one filter cartridge. The at least one filter cartridge operates to separate fluid into constituent parts.

BRIEF DESCRIPTION OF THE DRAWINGS

[0010] While the novel features of the invention are set forth with particularity in the appended claims, the invention, both as to organization and content, will be better understood and appreciated, along with other objects and features thereof, from the following detailed description taken in conjunction with the drawings, in which:

[0011] FIG. **1**-FIG. **1**C schematically show an example embodiment of a device for simultaneous, parallel or sequential depletion/concentration of organic and inorganic chemical constituents as well as microorganisms from a liquid medium, such as groundwater, drinking water, and the like.

[0012] FIG. **2**A-FIG. **2**C schematically show one example configuration of detailed side, top and bottom views of a filter cartridge module allowing for the targeted depletion from water, and concentration on a (disk-shaped) filter cartridge, of organic and inorganic chemical constituents as well as microorganisms from liquid media.

[0013] FIG. **2**D schematically shows an example of fluid connections in a device as described in FIG. **1**.

[0014] FIG. **3**A and FIG. **3**B schematically show a detailed top view and a detailed side view of a disk-shaped filter cartridge.

[0015] FIG. **4** schematically shows an alternate embodiment of a mounting arrangement for a device as described with respect to FIG. **1**.

[0016] FIG. **4**A is a more detailed view of an environmental/extraction module.

[0017] FIG. **5**A and FIG. **5**B schematically show a detailed side view and a top view of an example of an environmental/extraction module including a standard solid phase extraction media.

[0018] FIG. **6** schematically shows the use of a filter cartridge module to fractionate water constituents.

[0019] FIG. **7** schematically shows an example of the utility of a filter cartridge module for monitoring of a water supply.

[0020] FIG. **8** schematically shows an example of the utility of filter cartridge modules for use in a groundwater monitoring well.

[0021] FIG. **9** schematically shows an example of the utility of filter cartridge modules for use with in situ microcosm array technology.

[0022] FIG. **10** schematically shows an example of the utility of two filter cartridge modules for conditioning of groundwater prior to entry into in situ and ex situ microcosms with post-processing of microcosm effluent in the second filter cartridge module.

[0023] FIG. **11** schematically shows an example of the utility of filter cartridge modules for conditioning of groundwater prior to entry into in situ and ex situ microcosms.

[0024] FIG. **12** schematically shows an alternate example of the utility of filter cartridge modules for processing of water exiting in situ and ex situ microcosms.

[0025] FIG. **13** schematically shows another alternate example of the utility of filter cartridge modules for conditioning a liquid medium entering into in situ or ex situ microcosms and subsequent processesing of the microcosm effluent.

[0026] FIG. **14**A and FIG. **14**B schematically shows an example of the utility of filter cartridge modules to preconcentrate microorganisms for use with in situ microcosm arrays.

[0027] In the drawings, identical reference numbers identify similar elements or components. The sizes and relative positions of elements in the drawings are not necessarily drawn to scale. For example, the shapes of various elements and angles are not drawn to scale, and some of these elements are arbitrarily enlarged and positioned to improve drawing legibility. Further, the particular shapes of the elements as drawn, are not intended to convey any information regarding the actual shape of the particular elements, and have been solely selected for ease of recognition in the drawings.

DETAILED DESCRIPTION OF THE PREFERRED EMBODIMENTS

[0028] The following disclosure describes several embodiments and systems for ultra-trace analysis of environmental waters. Several features of methods and systems in accordance with example embodiments are set forth and described in the Figures. It will be appreciated that methods and systems in accordance with other example embodiments can include additional procedures or features different than those shown in the Figures. Example embodiments are described herein with respect to wells. However, it will be understood that these examples are for the purpose of illustrating the principles, and that the invention is not so limited.

[0029] Additionally, methods and systems in accordance with several example embodiments may not include all of the features shown in these Figures. Throughout the Figures, identical reference numbers refer to similar or identical components or procedures.

[0030] Unless the context requires otherwise, throughout the specification and claims which follow, the word "comprise" and variations thereof, such as, "comprises" and "comprising" are to be construed in an open, inclusive sense that is as "including, but not limited to."

[0031] Reference throughout this specification to "one example" or "an example embodiment," "one embodiment," "an embodiment" or various combinations of these terms means that a particular feature, structure or characteristic described in connection with the embodiment is included in at least one embodiment of the present disclosure. Thus, the appearances of the phrases "in one embodiment," "in an embodiment," "in one example" or similar phrases in various places throughout this specification are not necessarily all referring to the same embodiment. Furthermore, the particular features, structures, or characteristics may be combined in any suitable manner in one or more embodiments.

Definitions

[0032] Generally, as used herein, the following terms have the following meanings when used within the context of methods for ultra-trace sampling of liquids:

[0033] "Analyte" is understood as any compound that may be present in a sample that can be captured using a non-aqueous collection matrix and detected using an assay or method.

[0034] By "cartridge" is meant a container enclosing the solid matrix through which the sample is passed through or over. The solid matrix is enclosed in the cartridge to allow the sample to pass through the cartridge, for example into an inlet port and out of an outlet port, wherein the solid matrix is retained within the cartridge.

[0035] By "concentration" or "concentration of the analyte" as used herein is understood as decreasing the volume in which a given mass of an analyte is present. For example, decrease the volume in which the given mass of the analyte is present by at least at least 2-fold, at least 10-fold, at least 102-fold, at least 103-fold, at least 104-fold, or at least 105-fold.

[0036] "Contacting" as used herein is understood as bringing two components into sufficient proximity (e.g., a groundwater sample containing or potentially containing an analyte and a non-aqueous collection matrix that can bind the analyte, a fluid sample and the water intake zone of the device) for sufficient time and under appropriate condition of temperature, pressure, pH, ionic strength, and the like to allow for the interaction of the two components, e.g., the binding of the analyte to the non-aqueous collection matrix, the entry of water into the device through the water intake zone. Contacting in the context of the invention typically occurs in a non-aqueous collection matrix container such as cartridge, column, or other device that allows the water to flow through the container in a path to allow the water to contact the non-aqueous collection matrix. Contacting a non-aqueous collection matrix cartridge is understood as contacting the matrix within the cartridge with the fluid sample.

[0037] "Control system" as used herein is understood as a device such as a computer or recording device. The control system can be used predominantly for mechanical uses, such as positioning the device in the well. The control system can also be used for turning on and off various components of the device, such as the pump, opening and closing fluid lines in the pump, directing collection of a time integrated or time discrete sample, and the like. The control system can also be used for the purpose of data collection in the form of electronic data, or by attachment to a chart recording device. The control system can be physically attached to the device by wires or cables. Alternatively, it can be integrated into the device. A wireless control system can be used with the device.

[0038] As used herein, "detecting", "detection" and the like are understood as an assay or method performed for identification of a specific analyte in a sample. The amount of analyte detected in the sample can be none (zero) or below the limit of

detection (<LOD), positive and within the calibrated range, or positive and outside of the calibrated range of the assay or method.

[0039] "In situ" as used herein is understood as in the place where the assayed fluid flows (e.g., groundwater in the subsurface, preferably at or near the site that the sample is collected). "At or near the site that the sample is collected" is understood as at the same or similar depth such that pressure changes have little or no effect on the sample from the time that the sample is collected to the time that the sample is contacted with the non-aqueous matrix. It is understood that lateral movement within the well will typically have far less effect on pressure in the sample than movement in the depth in the well. In situ contacting of samples with a non-aqueous matrix is differentiated from contacting the non-aqueous matrix with the sample at the surface (i.e., ground level) when the sample is collected in the subsurface. It is understood that contacting surface water with the non-aqueous matrix at the site of collection (i.e., at ground level) is understood as contacting the sample with the matrix in situ.

[0040] As used herein, "non-aqueous analyte collection matrix", "matrix", "resin", and the like are understood as material or a mixture of materials that are designed to come into contact with the fluid sample and, through their relatively greater affinity relative to water, will remove and concentrate the analyte or analytes of interest from the fluid sample including dissolved solid, gas, and particulate materials of interest. For example, groundwater or surface water can be passed through, over, or mixed (i.e., contacted) with the non-aqueous analyte collection matrix, thereby causing this matrix to bind and concentrate one or more analytes. It is understood that the binding properties of the materials for one or more specific analytes can depend on various properties of the sampled fluid, for example, ionic strength, pH, and the like. The material can bind the analyte(s) specifically, e.g., chelator

[0041] "Obtaining" is understood herein as manufacturing, purchasing, or otherwise coming into possession of.

[0042] "Operably linked" is understood as a connection, either physical or electronic, between two components of the device, or a component of the device and a remote sensor, data collector, controller, computer, or the like such that the components operate together as desired. For example, a fluid line operably linked to a non-aqueous collection matrix cartridge is understood as a fluid line that delivers fluid to the non-aqueous collection matrix cartridge without loss of fluid and at the desired flow rate. A device operably linked to the controller can be moved to the desired position in the well, and the pump or other components of the device can be turned on or off using the controller.

[0043] As used herein, "plurality" is understood to mean more than one. For example, a plurality refers to at least two, three, four, five, ten, 25, 50, 75, 100, or more.

[0044] As used herein, "real time" is understood as while the process is occurring, for example, collecting data, and preferably transmitting data to a device or person, at the same time the sample is being collected. The data need not be transmitted instantaneously, but is preferably transmitted within about 1 minute, 2 minutes, 5 minutes, 10 minutes, 15 minutes, or 30 minutes from the time that it was collected, or the collection of the data packet was completed. Data can be sent continuously or periodically in real time for monitoring the progress of a process, or can be sent episodically, e.g., upon overload of a non-aqueous collection matrix cartridge, failure of the device, detection of water table, completion of in well purge, and the like

[0045] A "sample" or "fluid sample" as used herein refers to a material, particularly ground water, bulk water, pore water or surface water that is suspected of containing, or known to contain, an analyte. A fluid sample can include dissolved gases, as well as any dissolved or particulate solids. Methods and devices of the invention can be used for the collection of gases as well as dissolved or particulate solids upon selection of the appropriate non-aqueous collection matrix. A reference sample can be a "normal" sample, from a site known to not contain the analyte. A reference sample can also be taken at a "zero time point" prior to contacting the cell with the agent to be tested. A reference sample can also be taken during or after collection of a time integrated sample. A reference sample is typically a time discrete sample when it is collected at the same site as a time integrated sample.

[0046] Referring now jointly to FIG. **1**-FIG. **1**C, an example embodiment of a device for simultaneous, parallel or sequential depletion/concentration of chemical constituents from a liquid medium, such as groundwater, drinking water, and the like is shown. A modular monitoring assembly **201** includes an intake module **213**, at least one pump module **210**, and at least one filter cartridge module **215**. For clarity's sake, not shown in this drawing are various cables, tubes and connectors that must be assembled prior to installation of the monitoring assembly into a well. However, it will be understood that fluidic and electrical connections are made conventionally. Bayonet closure mechanisms, similar to those used on SLR cameras, may be effectively employed on the module ends for making quick, reliable connections between different modules. ACME threads **219** (as shown in FIG. **1**C) or similar tread types can also be used to assemble components and modules. See U.S. Ser. No. 12/702,033 as referenced above for more details.

[0047] FIG. **1**A-FIG. **1**C illustrate more details of the various modules. Note that in one useful embodiment, the modular design allows the various modules to be located within the monitoring assembly **201** in any desired arrangement or combination of arrangements. Due to the modular design, it is possible to scale the system up or down depending on the size of the well. For example, by changing the diameter of the snap-in column holders holding in place the plurality of test beds, larger test beds can be accommodated and housed in a tubular external housing of larger diameter. Each pump module may include a set of pump cartridges, a motor, and a set of rollers where the motor is connected to move the set of rollers in cooperation with the pump cartridges to peristaltically pump fluid.

[0048] In one example embodiment the plurality of intake ports may be advantageously fitted with a filter of a pore size suitable for allowing desirable chemical or biological constituents into the device but screening out larger particles, e.g., sand, that may lead to internal clogging of tubing and the test beds. The system of claim **1** further comprising a control system connected to control the plurality of pumps. Further, a power system is coupled to the control system. The power system may advantageously be a system selected from the group consisting of battery power, solar power, fuel cell power, generator power, transmission line supplied power and combinations thereof.

[0049] Referrring now to FIG. **2**A-FIG. **2**C, detailed side, top and bottom views of a filter cartridge module allowing for

the targeted depletion from water, and concentration on filter cartridges, of organic and inorganic chemical constituents as well as microorganisms from liquid media is shown. A filter cartridge module **215** includes a plurality of filter cartrige disks **315** that are arranged about the center axis **1** on a frame **317** to allow inlet ports **321** and outlet ports **323** to be connected to receive fluid flow from pump tubes (as shown in FIG. **2**D) and output fluid through outlet tubes. Each of the plurality of filter cartrige disks **315** may be mounted in an offset mount **327** having apertures **328** that allow passage of the inlet and outlet tubes. The frame **317** includes connecting rods **331** that are of sufficient length to connect through alignment holes **333** in each of the offset mounts and fastened to a top mount **335** and a bottom mount **337**. The offset mounts allow fluid tube connection access to the inlets and outlets.

[0050] Referring briefly to FIG. **2**D an example of fluid connections in a device as described in FIG. **1** is schematically shown. Liquid **10** enters the intake **213** and flows through the pump module **210**. The pump module **210** has a number of separate pump channels **211** that separately push fluid through separate filter cartridges in the at least one filter cartridge module.

[0051] Referrring now to FIG. **3**A and FIG. **3**B a detailed side view and a top view of a filter cartridge are shown. The filter cartridge **315** allows for the targeted concentration from a liquid of organic and inorganic chemical constituents as well as microorganisms. Each filter cartridge may contain a selected extraction cartridge material. The extraction cartridge materials are selected according to the analyte being analyzed using well-known principles.

[0052] Extraction cartridge materials for chemicals may advantageously include ion-exchange resins, activated carbon, molecular imprinted polymers, and the like. Filtration materials for biological sampling include cellulose acetate, nylon, polytetrafluoroethene (PTFE), metal screens, polyamide membranes, and molecular weight cutoff filters, and the like.

[0053] Suitable chemical analytes include but are not limited to:

[0054] Metals (alkali metals, alkaline earth metals, lanthanides, actinides, transition metals, and other metals and metalloids in the dissolved and particulate state and in various oxidation states), for example, cesium, magnesium, silver, arsenic, copper, iron, and the like,

[0055] Radionuclides in the dissolved and particulate state and in various oxidation states, for example, uranium, plutonium, and the like,

[0056] Non-metals (halogens, noble gases, other non-metals) in the dissolved and particulate state and in various oxidation states, for example, Cl, P, I, argon,

[0057] Inorganic compounds (nitrate, perchlorate, and the like), and

[0058] Organic compounds (chloroethenes, PCBs, dioxins, phthalates, pesticides, nitrosodimethyl amine (NDMA), and the like).

[0059] Suitable biological analytes of natural and artificial origin (e.g., genetically engineered), include but are not limited to:

[0060] Viruses (e.g., Norovirus, HIV, hepatitis viruses, MS**2** bacteriophage, enteric viruses, and the like, as well as non-naturally occurring, engineered infectious particles),

[0061] Bacteria (e.g., *E. coli, Salmonella, Streptococci, Legionella,* as well as spore-forming organisms such as *Bacilli* and *Clostridia* and their respective spores),

[0062] Fungi and molds (*Aspergillus niger,* and fungal spores from this and other species),

[0063] Parasites (e.g., *Cryptosporidium* spp., *Microsporidium* spp., oocysts of parasites, *Giardia lamblia,* and the like, and

[0064] Prions (PrP^{Sc} and others).

[0065] For more information on chemical and microbial contaminants, refer to the EPA website at http://www.epa.gov/safewater/contaminants/index.html.

[0066] Referring now to FIG. **4** an alternate embodiment example of a mounting arrangement for a device as described with respect to FIG. **1** is schematically shown. A modular monitoring assembly **201**A includes an intake module **213**, at least one pump module **210**, and at least one environmental/extraction module **415**. For clarity's sake, not shown in this drawing are various cables, tubes and connectors that must be assembled prior to installation of the monitoring assembly into a well. However, it will be understood that fluidic and electrical connections are made conventionally. The alternative modular system is otherwise constructed substantially similarly to assembly **201** as described hereinabove.

[0067] FIG. **4**A illustrates more details of an environmental/extraction module **415**. In one embodiment the environmental/extraction module **415** advantageously includes a cartridge containing a solid phase extraction media **417**.

[0068] Referring now to FIG. **5**A and FIG. **5**B a detailed side view and a top view of an example of environmental/extraction module containing standard solid phase extraction media are shown. In one embodiment, the environmental/extraction module **415** includes a plurality of extraction cartridges **418** containing solid phase extraction media **417**. The plurality of extraction cartridges **418** are arranged in parallel to allow for parallel, targeted concentration of organic and inorganic chemical constituents and microorganisms from liquid media. Standard solid phase extraction media may comprise glass cartridges that are filled with a selected extraction material. Such cartridges are commercially available from vendors such as Applied Separations, Inc. of Allentown, Pa., US. Glass cartridges are available prefilled with a packing/sorbent of choice, depending on the analyte. The use of glass is advantageous as it limits sorption of hydrophobic compounds to the filter housing. Clear glass has the further advantage of allowing visual inspection of accumulated materials.

[0069] Referring now to FIG. **6**, the use of a filter cartridge module to fractionate water constituents is shown. Fluid flow into a filter cartridge module **215** is indicated by arrow **602**. The filter cartridge module **215** fractionates the water into a plurality of constituents corresponding to different filter cartridges that are schematically illustrated as constituents **215**A-**215**H. For example, constituent **215**A may advantageously use a 3-μm filter disk to concentrate oocysts of Cryptosporidium on the filter and produces Cryotosporium-depleted effluent. Constituent **215**B may advantageously use a 0.2-μm filter disk to concentrate biomass except for viruses on the filter and produces biomass-depleted effluent. Constituent **215**C may advantageously use a 3-μm filter disk **215**C' and a 0.2-μm filter disk in sequence to reduce the risk of clogging of the 0.2 μm-filter. Constituent **215**D may advantageously use an anion exchange disk to concentrate target anions on the disk and produces anion-conditioned effluent.

Constituent **215**E may advantageously use a disk cartridge filled with molecularly imprinted polymer (MIP) or solid phase extraction (SPE) resin to concentrate desired organic compounds on the disk and produces effluent depleted in these specific compounds. Constituent **215**F may advantageously use an anion exchange **215**F' and MIP/SPE disk **215**F" in sequence to concentrate select anions and organic compounds on the disks and produces effluent depleted in select anions and organic compounds. Constituents **215**G and **215**H may advantageously use two (**215**G' and **215**H') or more identical disk cartridges arranged in series for complete removal of an analyte of interest. Complete depletion of the analyte from constituent **215**G can be proven experimentally by analysis of cartridge **215**H'. Showing absence of said analyte in cartridge **215**H' enables closure of the mass balance for the analyte of interest via extraction and analysis of the analyte mass captured in cartridge **215**G'.

[0070] Referring now to FIG. **7**, an example of the utility of a filter cartridge module for monitoring of a water supply is shown. Fluid flow into the inlet port of the filter cartridge module **215** is indicated by directional arrow **702** and outlet flow is indicated by arrow **704**. A conventional in-line sensing device **706** allows for simultaneous capture and concentration of microorganisms and chemical constituents on separate filters and extraction media. Cartridge module **215** may be analyzed post sampling in off-line mode for both microbial and chemical constituents. Alternatively, data also can be sent via wireless transmission, cable or wire to a monitoring system **707**. The at least one sensing unit may include sensors selected from the group consisting of real-time sensors, monitoring equipment, acidity (pH), oxidation/reduction potential (Eh), dissolved oxygen (DO), ion-specific electrodes and chemical sensors, a temperature sensor, an ion-specific electrode, a biochemical sensor, an electrochemical sensor, a tuning fork sensor, and combinations thereof. Monitoring system **707** may comprise a personal computer or similar equipment suitable for storing, analyzing and/or displaying data.

[0071] Referring now to FIG. **8**, an example of the utility of a filter cartridge module in a groundwater monitoring well is shown. A well **5**, contains an in situ well sampling system assembled substantially as described above with reference to FIG. **1** or FIG. **4**, for example. The assembly is tethered by a cable bundle **3** to a stable platform **9**. In one example application the assembly may be positioned below the unsaturated Vadose zone and below the groundwater table **11** in the aquifer **7**. In this configuration, the in situ well system can serve to sample and process groundwater.

[0072] Referring now to FIG. **9**, an example of the utility of a filter cartridge module in a groundwater monitoring well for use with in situ microcosm array technology (**201**) is shown. Water exiting select sediment microcosms passes through a filter cartridge module **215** located downstream of the sediment microcosms and upstream of the effluent collection vessels, if used. This configuration enables removal of select microorganisms and select chemicals from sediment column effluent.

[0073] Referring now to FIG. **10**, an alternative use of two filter cartridge modules in conjunction with the in situ microcosm array technology (**201**) is shown. Water taken from the well is first pre-processed in filter cartridge module **201** and then allowed to enter the in situ microcosm array technology (**201**), whose effluent is processed via passage through a second filter cartridge module **201'**. This arrangement enable removal of select chemicals and microorganisms from the groundwater prior to testing in the in situ microcosm array technology, as well as post-processing of the effluent of the microcosm array for capture and determination of chemicals and microorganisms in microcosm effluent.

[0074] In FIGS. **8**, **9** and **10**, the at least one pump may advantageously be controlled by a control system **50** located in one embodiment on the ground surface and in communication with the sampling system as generally indicated by control line **42** and powered by a power system **52**. The power system **52** may include any power setup useful for remote locations such as battery power, solar power, fuel cell power, generator power, transmission line supplied power or the like. Using independent power generation from solar panels, storage batteries and equivalent devices, the unit may be operated off the grid with DC current provided for continuous "around-the-clock" operation, day and night.

[0075] Referring now to FIG. **11**, an example of the utility of a filter cartridge module for conditioning of groundwater prior to entry into in situ and ex situ microcosms is schematically shown. In the example, environmental/extraction cartridges comprise test beds **517**. A test bed provides an environment for materials to interact. Such materials could be chemicals, microbes, and the like or a combination thereof. A test bed may be a microcosm, a biotrap, a reactor, or similar devices. Groundwater entering the microcosms can be preconditioned by removing select microorganisms (A), select chemicals (B), or both (C).

[0076] In one useful application the system disclosed herein includes biotrap filters. Use of the system with biotrap filters allows the biotraps to benefit from the concept of controlled flow and pre-conditioning and post-conditioning of fluids, such as, for example, groundwater. Biotrap systems are commercially available from Microbial Insights, Inc. of Rockford, Tenn., US. The utility of this disclosure eliminates important drawbacks of biotraps as previously used. For example, as used conventionally without the benefit of the teachings of this disclosure, the flow of water past the biotrap is not preconditioned and the volume of water in contact with the biotrap over time is unknown. Thus quantitative analysis of the flow is problematic, unreliable or impossible. Further, loss of isotopically labeled substances used in the biotrap could be monitored using the concepts shown here which would enable a complete mass balance on isotopes. Preconditioning of water prior to entry of the microcosm (sediment microcosm or biotrap) could help to deduce what reactions are microbially mediated and what reactions are abiotic.

[0077] Referring now to FIG. **12**, an alternate example of the utility of filter cartridge modules for processing of water exiting in situ and ex situ microcosms is schematically shown. Water is pumped at a predetermined flow rate through, for example, test beds **517** comprising microcosms, and is then forced through appropriate in-line filter cartridges **315** to remove select microorganisms (A), select chemicals (B), or both (C).

[0078] Referring now to FIG. **13** another alternate example of the utility of filter cartridge modules for conditioning a liquid medium entering into in situ or ex situ microcosms **517**A and subsequent processesing of the microcosm effluent, again using the disk array approach is schematically shown. Water is pumped at a predetermined flow rate through one (A, B) or more filter cartridges (C) and this pre-conditioned water, after passage through each microcosm **517**A,

then passes through one (A, B) or more (C) additional in-line disks to collect select microorganisms, select chemicals, or both.

[0079] Referring now jointly to FIG. **14**A and FIG. **14**B, an example of the utility filter cartridge modules to preconcentrate microorganisms for use in in situ microcosm arrays is schematically shown. In FIG. **14**A, showing step A, microbes suspended in water are captured on a solid medium or on a filtration disk **315**. Unwanted filtrate can be discharged as effluent **619**. In FIG. **14**B, showing step B, the flow direction of water is reversed by use of one or more valves (**1201**, **1202**, **1203**) and the concentrated microbes are flushed from the filter disk **315** into a test bed **517** comprising, for example, a microcosm, for studying their survival and interaction with chemicals of interest. Use of 3 valves, **1201**, **1202**, **1203** can allow for loading of the filter (Step **1**) and eluting concentrated microorganisms from the filter (Step **2**) in a 2-step process.

[0080] The invention has been described herein in considerable detail in order to comply with the Patent Statutes and to provide those skilled in the art with the information needed to apply the novel principles of the present invention, and to construct and use such exemplary and specialized components as are required. However, it is to be understood that the invention may be carried out by specifically different equipment, and devices, and that various modifications, both as to the equipment details and operating procedures, may be accomplished without departing from the true spirit and scope of the present invention.

1. A system for advanced monitoring in liquid environments of dissolved and suspended constituents, the system comprising:

a monitoring assembly with an intake inserted therein;

at least one pump featuring at least one pump channel mounted in said monitoring assembly;

a plurality of fluid lines coupled to the at least one pump;

at least one filter cartridge, each being separately coupled by one of the plurality of fluid lines to one of the pump channels, where each filter cartridge contains material for extracting an analyte, and where the at least one pump operates to separately push fluid through the at least one filter cartridge; and wherein the at least filter cartridge operates to separate fluid into constituent parts.

2. The system of claim **1** where the extraction materials are selected for extracting chemicals from the group consisting of ion-exchange resins, activated carbon, molecular imprinted polymers, polymers featuring selective docking sites for analytes of interest, and combinations thereof.

3. The system of claim **1** where the extraction cartridge materials are selected for biological sampling from the group consisting of cellulose acetate, nylon, polytetrafluoroethene (PTFE), quartz, metal screens, polyamide membranes, and molecular weight cutoff filters, and combinations thereof.

4. The system of claim **1** wherein the extraction cartridge materials are selected for extracting chemical analytes selected from the group consisting of metals, alkali metals, alkaline earth metals, lanthanides, actinides, transition metals, metals and metalloids in the dissolved and particulate state and in various oxidation states, cesium, magnesium, silver, arsenic, copper, iron, and alloys thereof, radionuclides in the dissolved and particulate state and in various oxidation states, uranium, plutonium, halogens, noble gases, in the dissolved and particulate state and in various oxidation states including Cl—, P, I, argon, inorganic compounds, nitrate, perchlorate, and combinations thereof and organic compounds, chloroethenes, PCBs, dioxins, phthalates, pesticides, nitrosodimethyl amine, NDMA, and combinations thereof.

5. The system of claim **1** wherein the extraction cartridge materials are selected for extracting biological analytes of natural and artificial origin selected from the group consisting of proteins, lipids, carbohydrates, DNA, RNA, viruses, norovirus, HIV, hepatitis viruses, MS2 bacteriophage, enteric viruses, non-naturally occurring engineered infectious particles, bacteria, *E. coli, Salmonella, Streptococci, Legionella,* spore-forming organisms, *Bacilli, Clostridia* and their respective spores, Fungi and molds, *Aspergillus niger,* fungal spores, parasites, *Cryptosporidium* spp., *Microsporidium* spp., oocysts of parasites, *Giardia lamblia,* prions including PrP^{Sc}.

6. The system of claim **1** further comprising at least one sensing unit coupled to receive fluid from the at least one filter cartridge.

7. The system of claim **1** further comprising at least one sensing unit coupled to receive fluid from the at least one filter cartridge, where the at least one sensing unit includes sensors selected from the group consisting of real-time sensors, monitoring equipment, acidity (pH), oxidation/reduction potential (Eh), dissolved oxygen (DO), specific conductivity, ion-specific electrodes and chemical sensors, a temperature sensor, an ion-specific electrode, a biochemical sensor, an electrochemical sensor, a tuning fork sensor, a nanosensor and combinations thereof.

8. The system of claim **7** wherein the at least one sensing unit transmits data to a monitoring system.

9. The system of claim **1** wherein the at least one pump comprises at least one peristaltic pump.

10. The system of claim **1** wherein the intake comprises a plurality of intake ports fitted with a filter of a pore size suitable for allowing microorganisms into the device but screening out larger particles that may lead to internal clogging.

11. The system of claim **1** further comprising at least one environmental/ extraction module.

12. The system of claim **11** wherein the at least one environmental/ extraction module comprises a test bed or an extraction cartridge.

13. The system of claim **12** wherein the test bed comprises a device selected from the group consisting of a chemical reactor, a microbial reactor, a microcosm, a biotrap, a reactor, a chemical sensor, a biochemical sensor, and combinations thereof.

14. The system of claim **11** wherein the at least one environmental/extraction module comprises glass.

15. The system of claim **1** further wherein the at least one filter cartridge is contained in at least one filter cartridge module mounted in said assembly.

16. A method for monitoring comprising:

locating an assembly in a well including at least one pump and at least one filter cartridge;

operating the at least one pump to push water through the at least one filter cartridge where the at least one filter cartridge holds material for extracting an analyte; and

wherein the at least one filter cartridge operates to separate fluid into constituent parts.

17. The method of claim **16** further comprising incorporating at least one environmental/extraction module to receive fluid flowing through the at least one filter cartridge.

18. The method of claim **16** where the extraction material is selected for extracting chemicals from the group consisting of ion-exchange resins, hydrophilic-hydrophobic interaction polymers, activated carbon, molecular imprinted polymers, polymers featuring analyte-specific docking sites, and combinations thereof.

19. The method of claim **16** where the extraction material is selected from the group consisting of cellulose inorganic polymers, organic polymers, acetate, nylon, polytetrafluoroethene (PTFE), metal screens, polyamide membranes, and molecular weight cutoff filters, and combinations thereof.

20. The method of claim **16** wherein the extraction material is selected for extracting chemical analytes selected from the group consisting of metals, alkali metals, alkaline earth metals, lanthanides, actinides, transition metals, metals and metalloids in the dissolved and particulate state and in various oxidation states, cesium, magnesium, silver, arsenic, copper, iron, and alloys thereof, radionuclides in the dissolved and particulate state and in various oxidation states, uranium, plutonium, halogens, noble gases, in the dissolved and particulate state and in various oxidation states including Cl—, P, I, argon, inorganic compounds, nitrate, perchlorate, and combinations thereof and organic compounds, chloroethenes, PCBs, dioxins, phthalates, pesticides, nitrosodimethyl amine, NDMA, and combinations thereof.

21. The method of claim **16** wherein the extraction material is selected for extracting biological analytes of natural and artificial origin selected from the group consisting of proteins, lipids, DNA, RNA, viruses, norovirus, HIV, hepatitis viruses, MS**2** bacteriophage, enteric viruses, non-naturally occurring engineered infectious particles, bacteria, *E. coli, Salmonella, Streptococci, Legionella,* spore-forming organisms, *Bacilli, Clostridia* and their respective spores, Fungi and molds, *Aspergillus niger,* fungal spores, parasites, *Cryptosporidium* spp., *Microsporidium* spp., oocysts of parasites, *Giardia lamblia,* prions including PrP^{Sc}.

22. The method of claim **16** further comprising connecting at least one sensing unit to receive fluid from the at least one filter cartridge module.

23. The method of claim **16** further comprising connecting at least one sensing unit to receive fluid from at least one of the plurality of filter cartridge modules, where the at least one sensing unit includes sensors selected from the group consisting of real-time sensors, monitoring equipment, acidity (pH), oxidation/reduction potential (Eh), dissolved oxygen (DO), ion-specific electrodes and chemical sensors, a temperature sensor, an ion-specific electrode, a biochemical sensor, an electrochemical sensor, a tuning fork sensor, and combinations thereof.

24. The method of claim **22** wherein the at least one sensing unit transmits data to a monitoring system.

25. The method of claim **16** wherein the at least one pump comprises at least one peristaltic pump.

26. The method of claim **16** wherein the at least one environmental/extraction module comprises a test bed module including at least one test bed.

27. The method of claim **16** further comprising:

using a filter cartridge to precondition groundwater by removing select microorganisms and/or using a filter cartridge to precondition a liquid to remove select chemicals; and

pumping the filtered liquid through a microcosm.

28. The method of claim **16** further comprising:

pumping water at a predetermined flow rate through a microcosm;

then forcing fluid exiting the microcosm through at least one in-line filter cartridge to remove select microorganisms, select chemicals, or both (C).

29. The method of claim **16** further comprising:

pumping water at a predetermined flow rate through at least one filter cartridge to produce pre-conditioned water;

passing the preconditioned water through at least one microcosm, then passing water flowing through the at least one microcosm through at least one additional in-line filter cartridge to collect select microorganisms, select chemicals, or both.

30. The method of claim **16** further comprising:

capturing suspended microbes on a solid medium or on a filtration disk; and reversing the flow direction of the water to flush the concentrated microbes into a microcosm.

31. The method of claim **29** further comprising

operating a first valve for backwashing of the filter cartridge; and

operating a second valve to bypass the filter cartridge.

32. The method of claim **16** wherein the at least one filter cartridge contained in at least one filter cartridge module.

* * * * *

Appendix D: US 2014/0102182 A1, “Devices and methods for determination of bioavailability of pollutants”

This page intentionally blank.

US 20140102182A1

(19) United States

(12) Patent Application Publication

Halden et al.

(10) Pub. No.: US 2014/0102182 A1

(43) Pub. Date: Apr. 17, 2014

(54) **DEVICES AND METHODS FOR DETERMINATION OF BIOAVAILABILITY OF POLLUTANTS**

(75) Inventors: **Rolf U. Halden**, Phoenix, AZ (US); **Isaac B. Roll**, Tempe, AZ (US)

(73) Assignee: **Arizona Board of Regents**, Scottsdale, AZ (US)

(21) Appl. No.: **14/112,711**

(22) PCT Filed: **Apr. 17, 2012**

(86) PCT No.: **PCT/US12/33912**

§ 371 (c)(1), (2), (4) Date: **Dec. 12, 2013**

Related U.S. Application Data

(60) Provisional application No. 61/476,865, filed on Apr. 19, 2011, provisional application No. 61/481,424, filed on May 2, 2011.

Publication Classification

(51) **Int. Cl.**

G01N 15/06 (2006.01)

B01D 15/08 (2006.01)

(52) **U.S. Cl.**

CPC ***G01N 15/0631*** (2013.01); ***B01D 15/08*** (2013.01)

USPC **73/61.73**; 210/660; 210/266

(57) **ABSTRACT**

Contaminant mass collection in saturated sedimentary environments for bioavailability determination. A casing includes a screen between the environment that is subject to sampling, such as a saturated sediment and the device itself. The casing includes a water intake zone, a pump, and sorptive media. The water intake zone, the pump, the screen and the sorptive media, are all operably linked in sequence. The screened casing is secured to form an in situ device; the screen is in fluid communication with the water intake zone and excludes endemic sediments and aquatic life. The in situ device is deployed in the saturated sedimentary environment. The pump operates to concentrate analytes from the selected environment in the sorptive media, where the concentrated analytes include the analyte mass of time-weighted fluid samples.

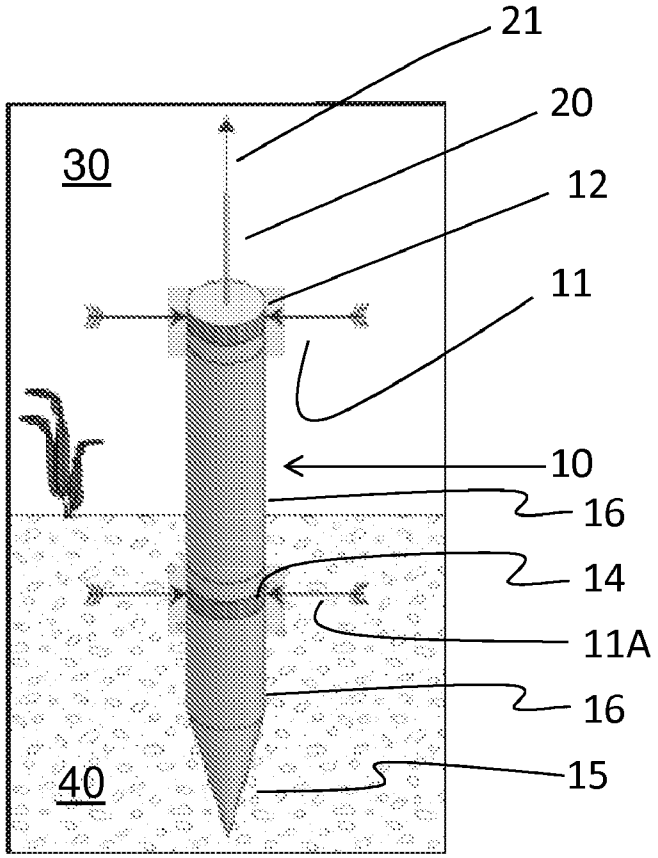

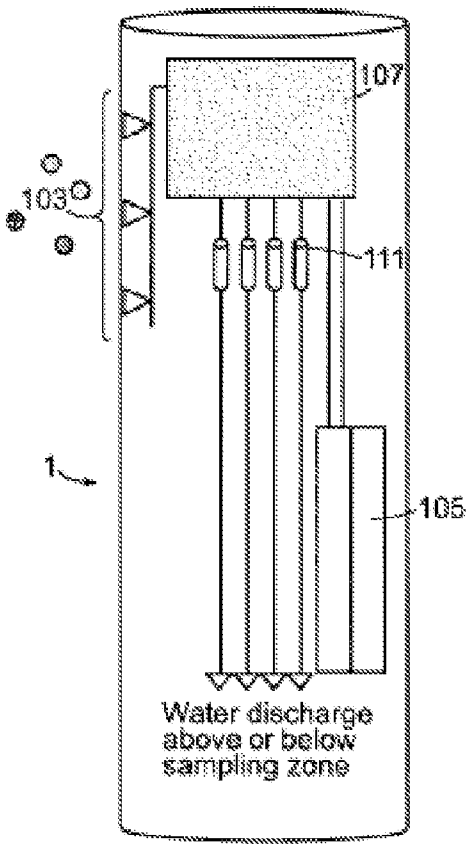

FIG. 1A
(PRIOR ART)

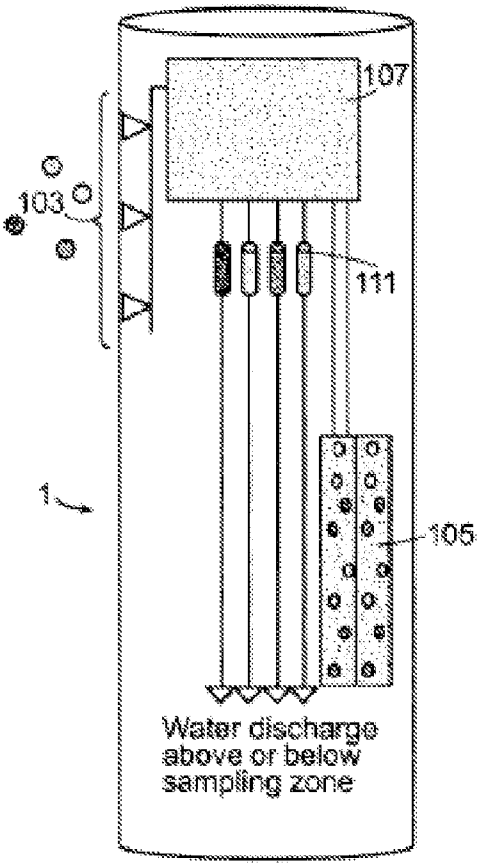

FIG. 1B
(PRIOR ART)

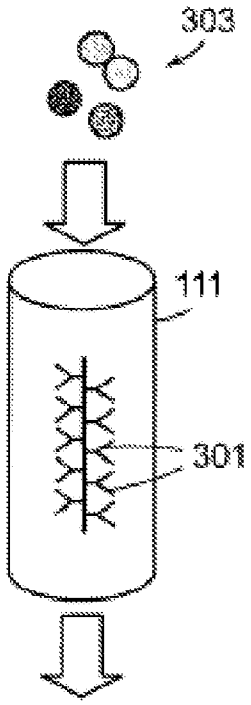

FIG. 2A
(PRIOR ART)

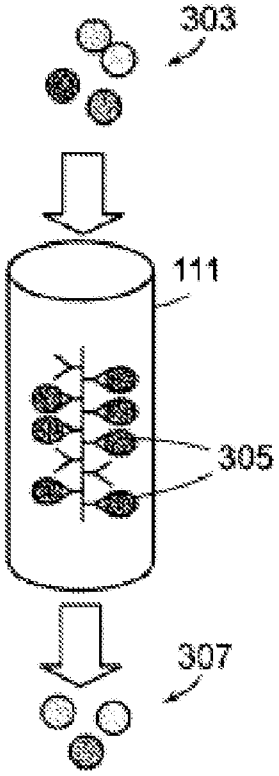

FIG. 2B
(PRIOR ART)

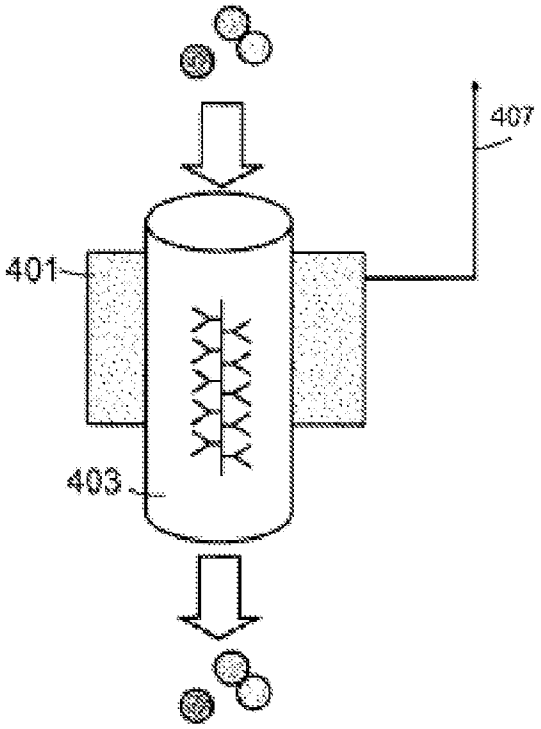

FIG. 3A
(PRIOR ART)

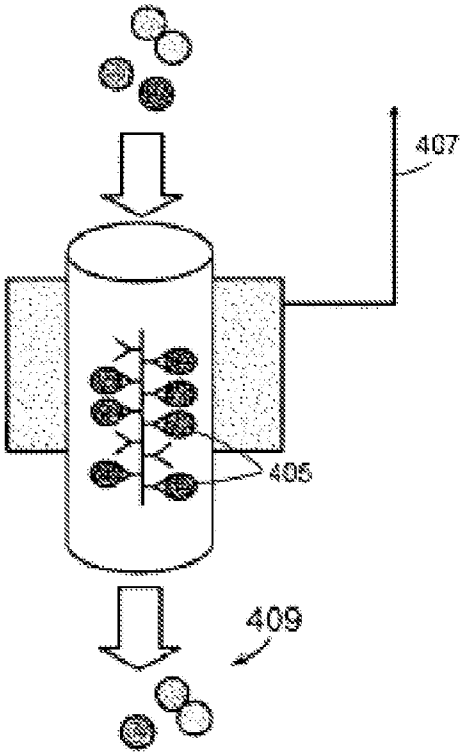

FIG. 3B
(PRIOR ART)

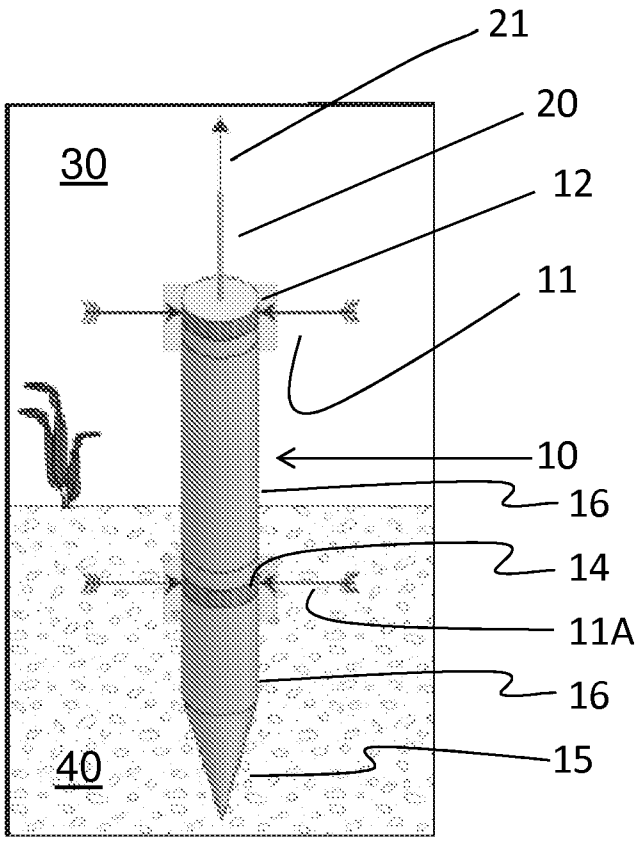

FIG. 4

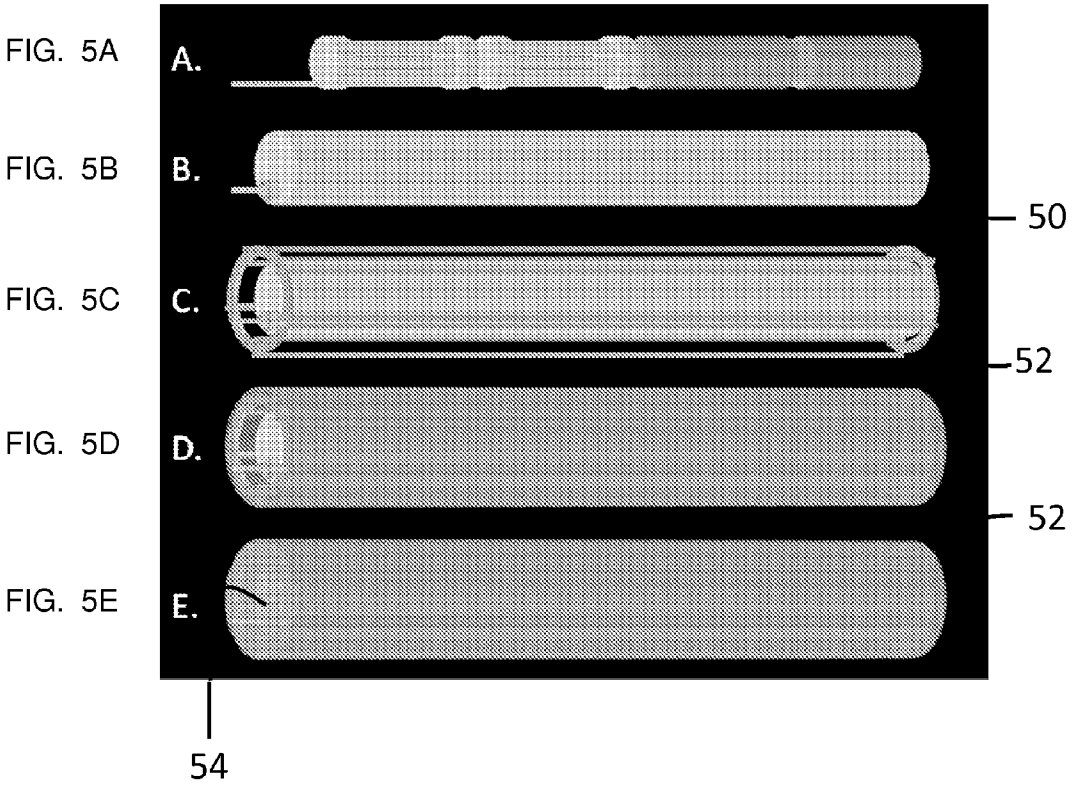
FIG. 5A
A.
FIG. 5B
B.
FIG. 5C
C.
FIG. 5D
D.
FIG. 5E
E.
50
52
52
54

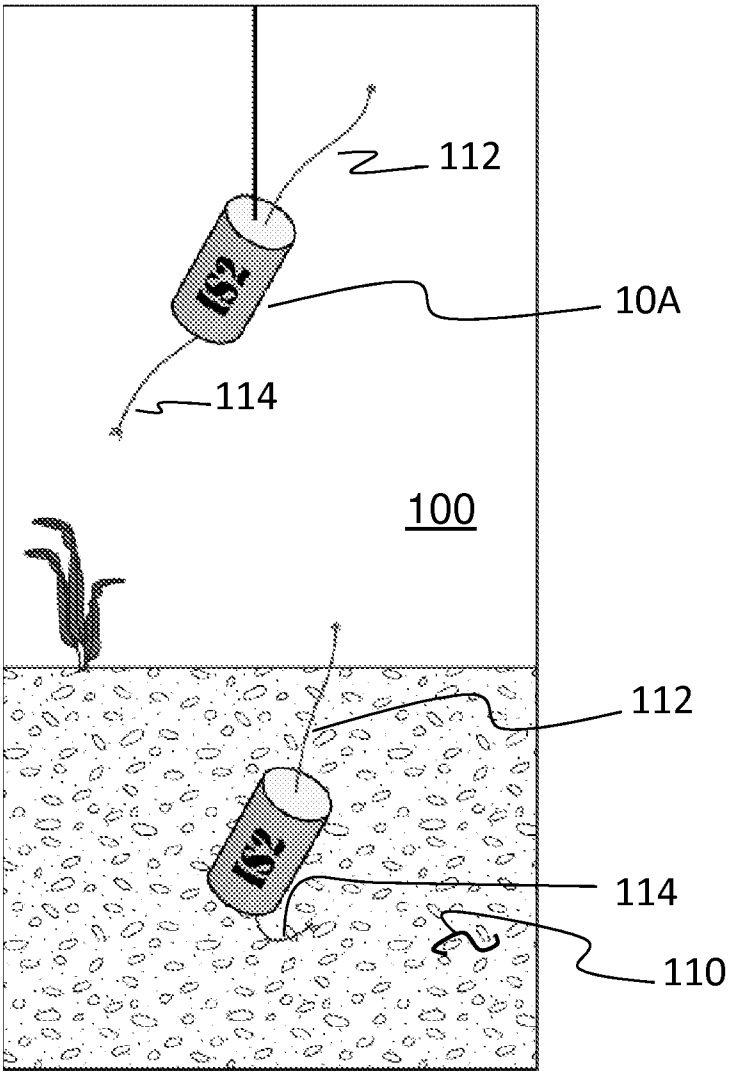

FIG. 6

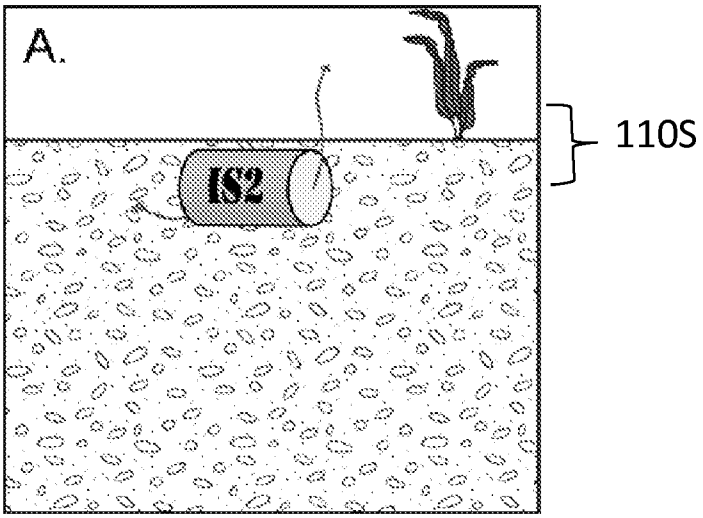

FIG. 7A

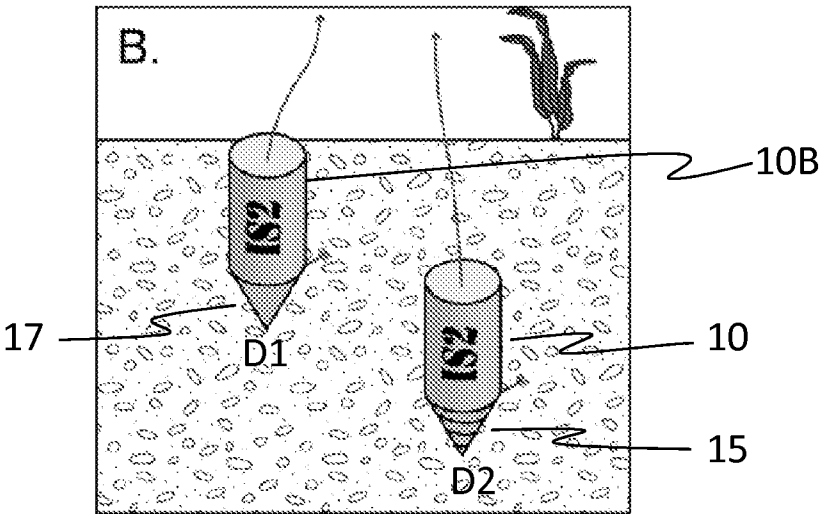

FIG. 7B

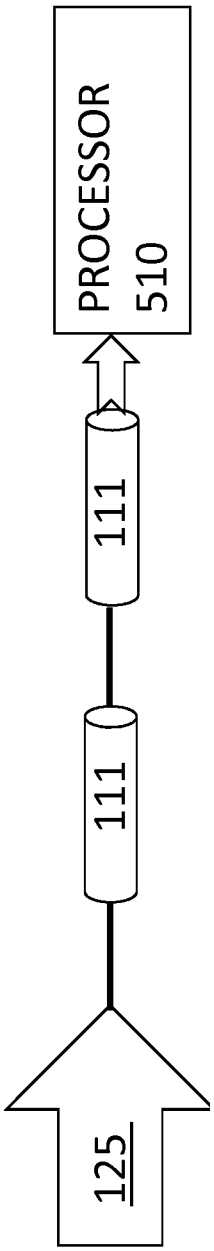

FIG. 8

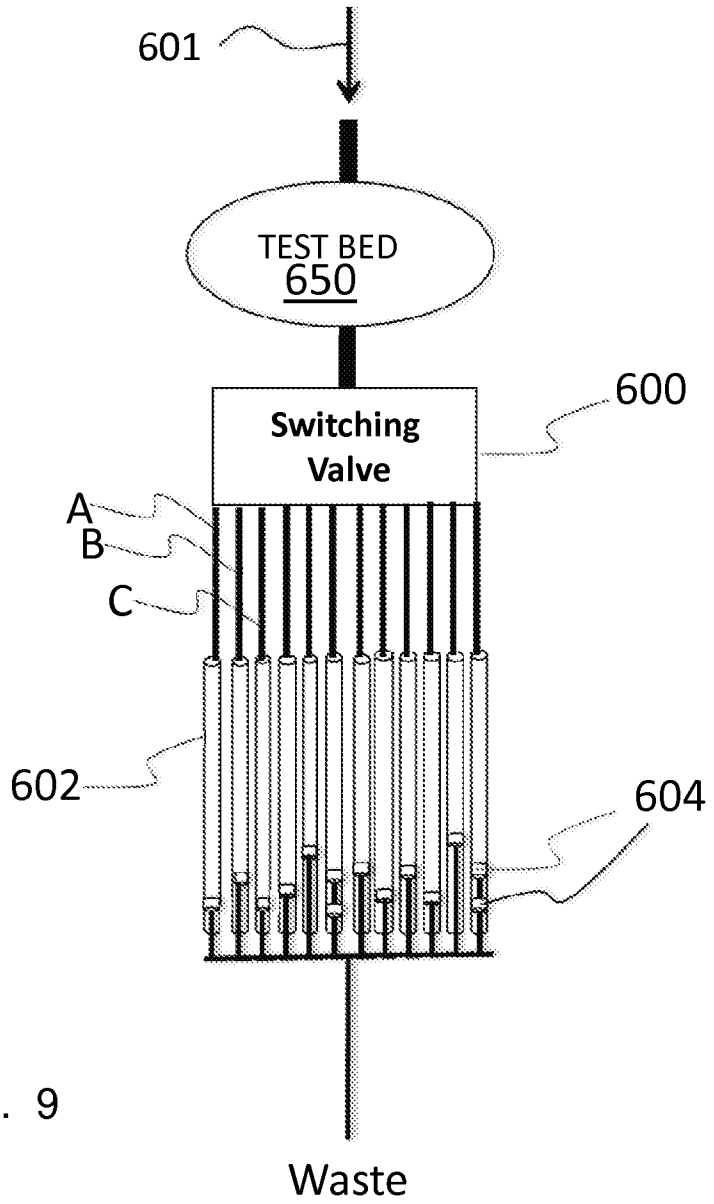

FIG. 9

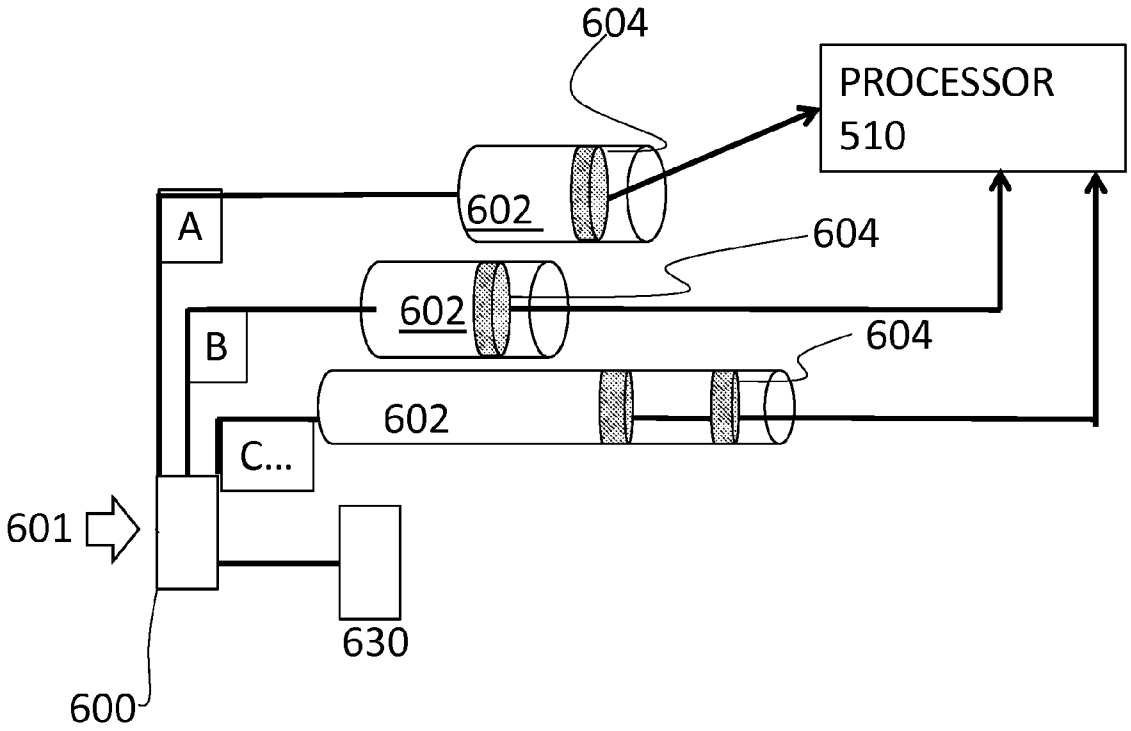

FIG. 10

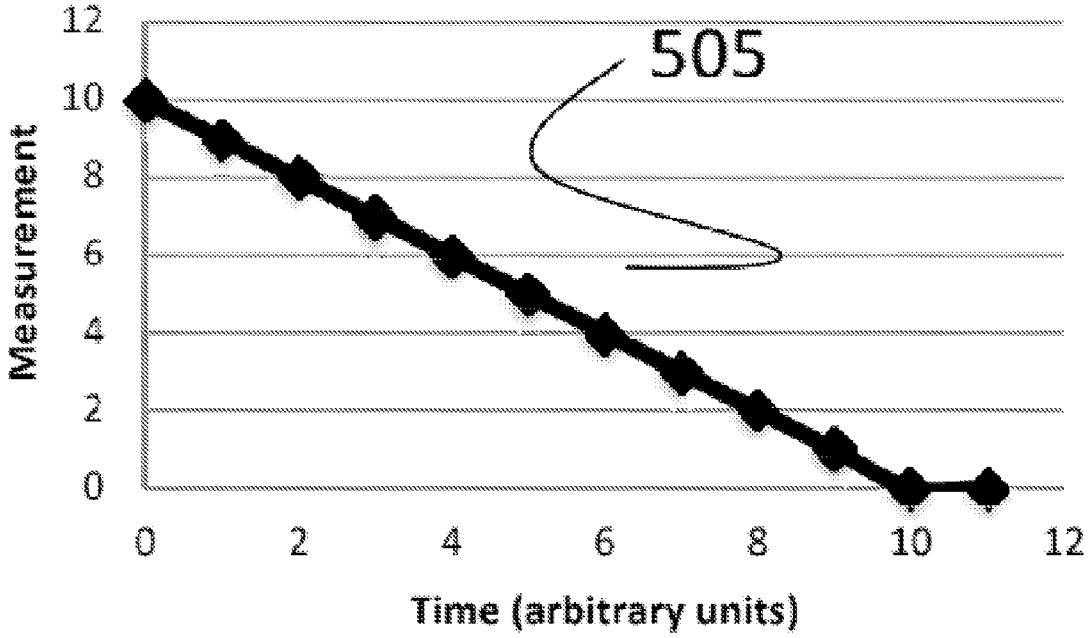
505
Measurement
12
10
8
6
4
2
0
0
2
4
6
8
10
12
Time (arbitrary units)

FIG. 11

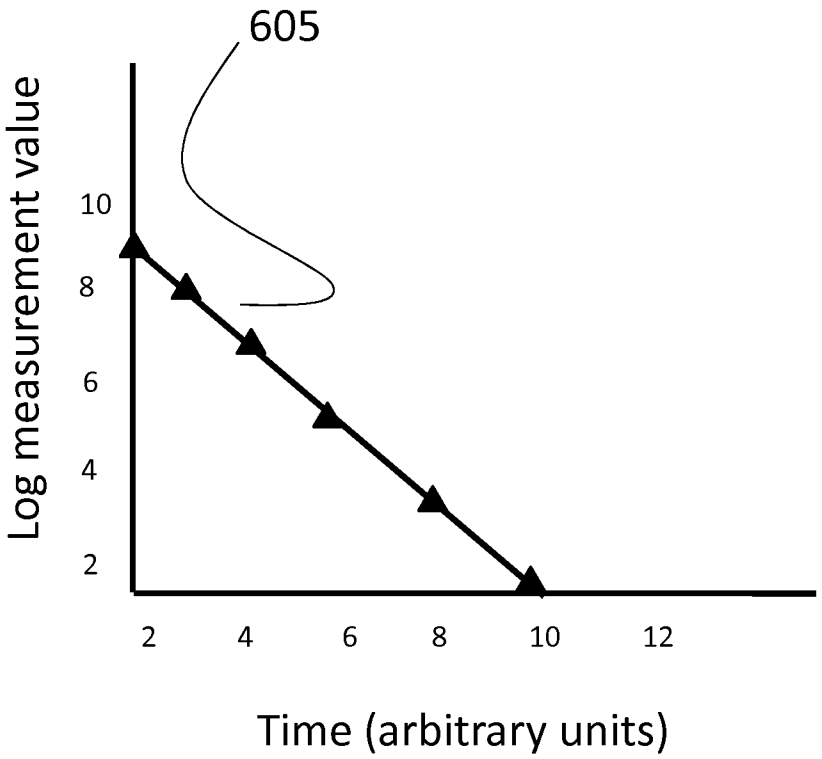
605
Log measurement value
10
8
6
4
2
2
4
6
8
10
12
Time (arbitrary units)

FIG. 12

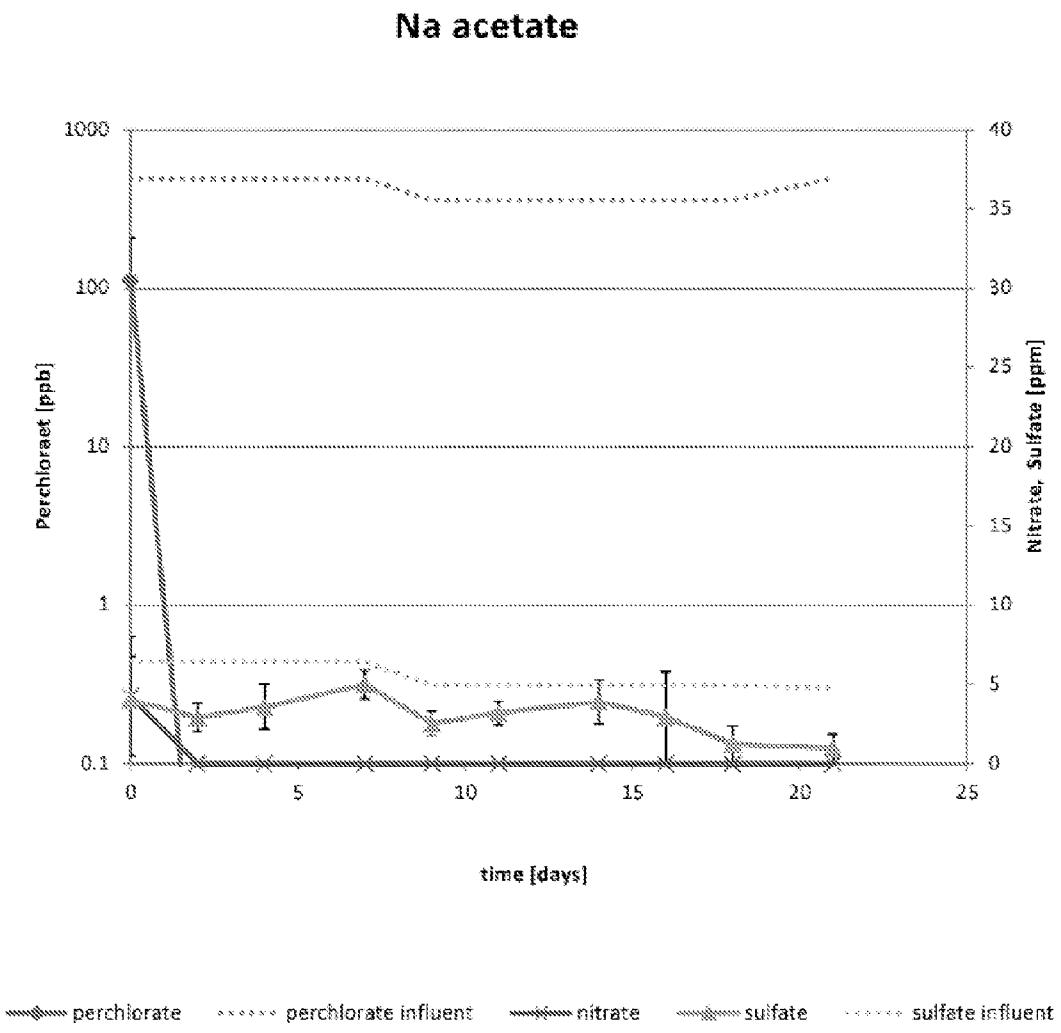
Na acetate
1000
100
10
1
0.1
Perchloraet [ppb]
40
35
30
25
20
15
10
5
0
Nitrate, Sulfate [ppm]
0
5
10
15
20
25
time [days]
perchlorate
perchlorate influent
nitrate
sulfate
sulfate influent

FIG. 13

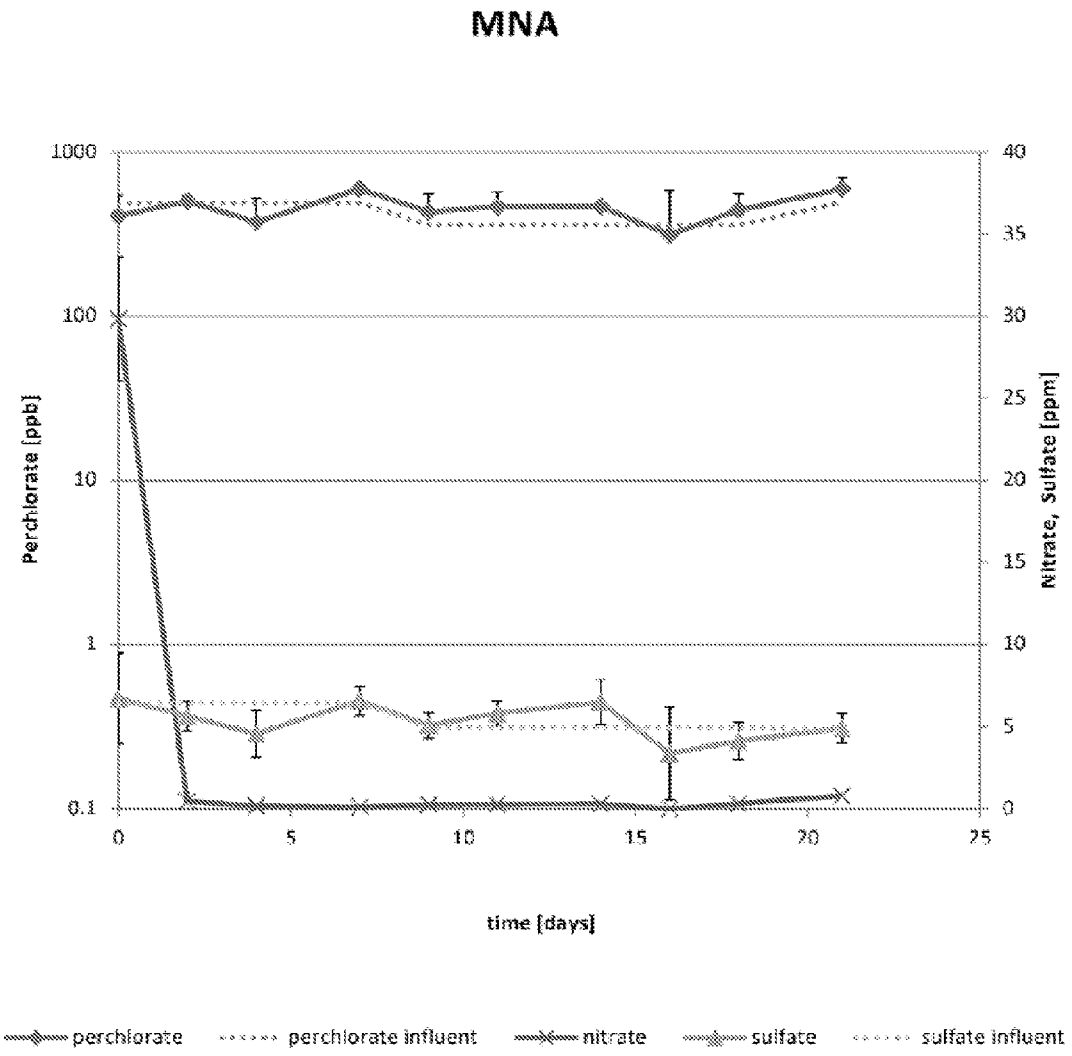
MNA
1000
100
10
1
0.1
Perchlorate [ppb]
40
35
30
25
20
15
10
5
0
Nitrate, Sulfate [ppm]
0
5
10
15
20
25
time [days]
perchlorate
perchlorate influent
nitrate
sulfate
sulfate influent

FIG. 14

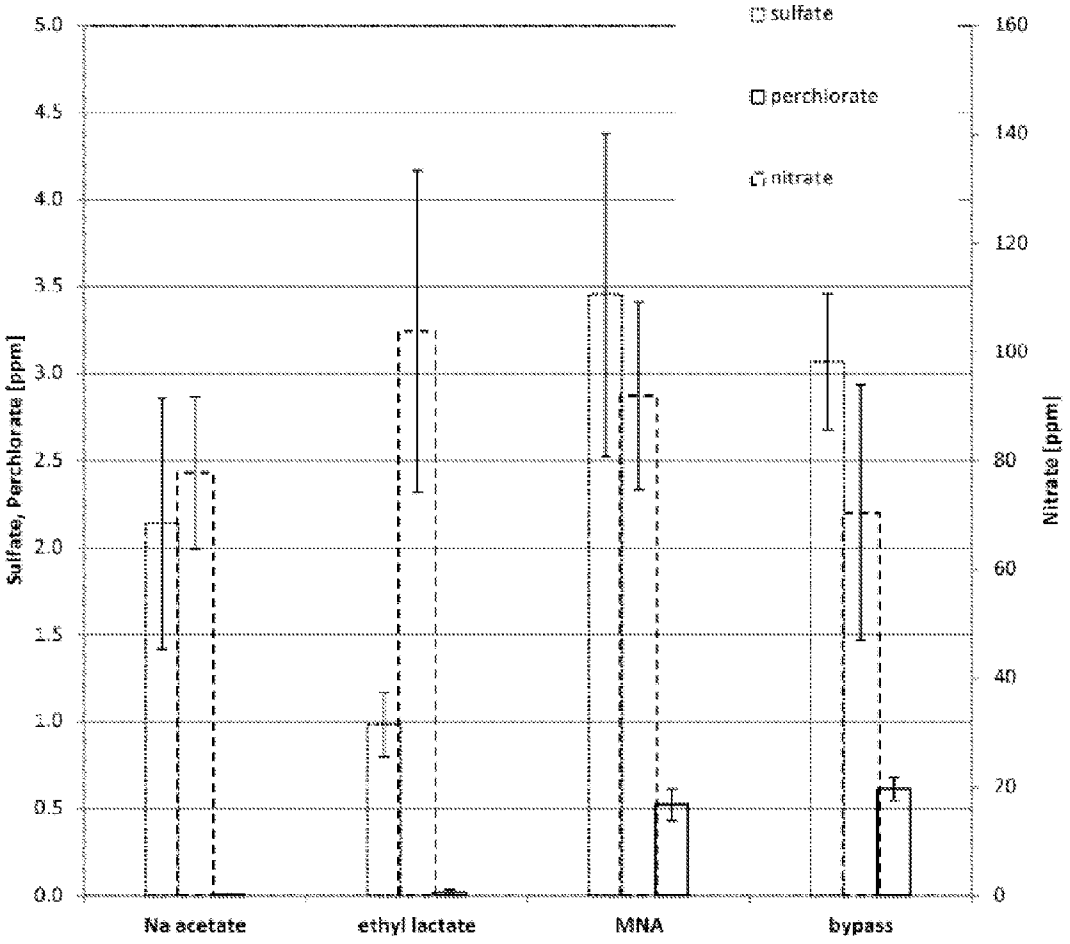
sulfate
perchlorate
nitrate
Sulfate, Perchlorate [ppm]
Nitrate [ppm]
5.0
4.5
4.0
3.5
3.0
2.5
2.0
1.5
1.0
0.5
0.0
160
140
120
100
80
60
40
20
0
Na acetate
ethyl lactate
MNA
bypass

FIG. 15

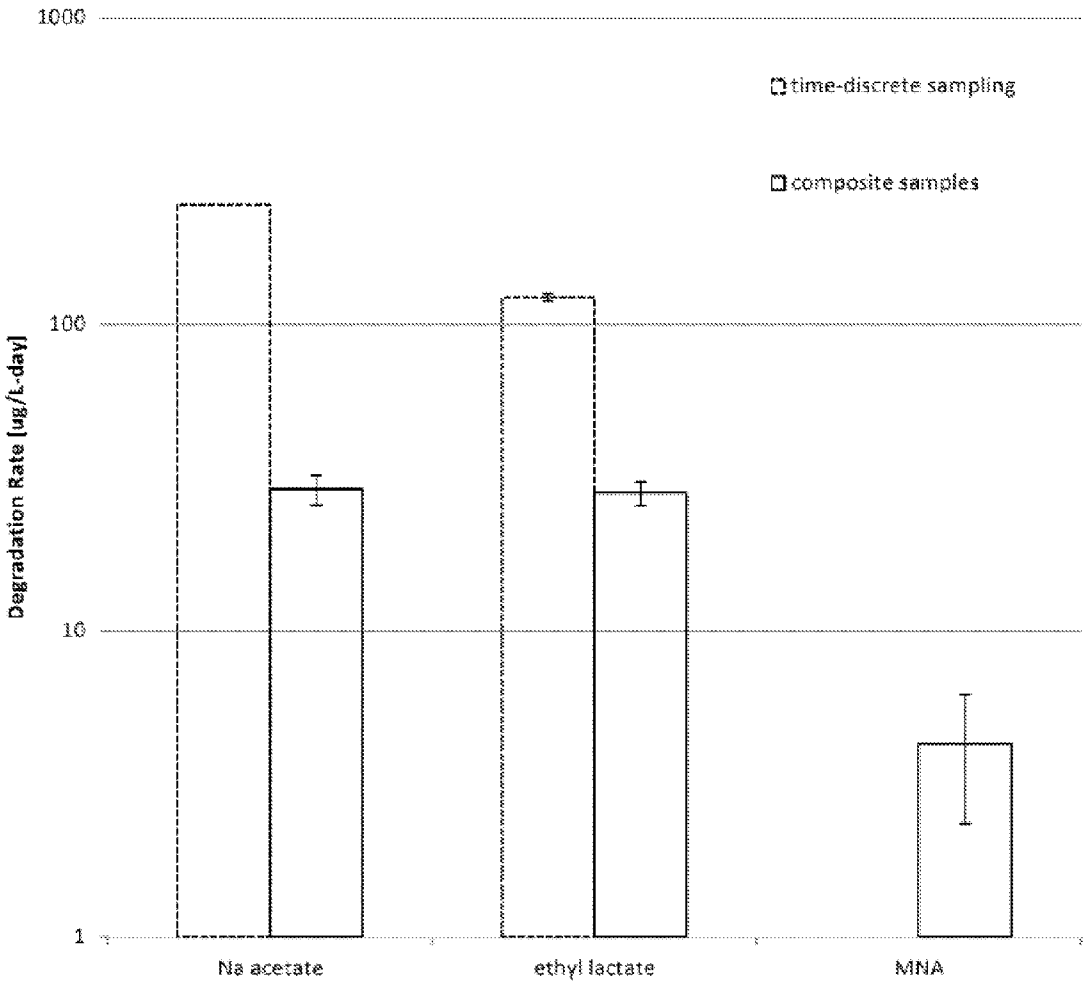
1000
100
10
1
Degradation Rate [ug/L-day]
time-discrete sampling
composite samples
Na acetate
ethyl lactate
MNA

FIG. 16

DEVICES AND METHODS FOR DETERMINATION OF BIOAVAILABILITY OF POLLUTANTS

CROSS-REFERENCE TO RELATED APPLICATIONS

[0001] Related technology is disclosed in pending PCT patent application publication WO/2009/105241, published on Aug. 27, 2009, and entitled "Methods and Systems for Ground and Surface Water Sampling and Analysis," pending PCT patent application publication WO 2011/140270 published on Nov. 10, 2011, and entitled "Methods and Systems for Ultra-Trace Analysis of Liquids," and pending U.S. patent application Ser. No. 12/702,033, filed on Feb. 8, 2010, entitled "Methods and Systems for Fluid Examination and Remediation," (herein referred to as the related patent applications) both to a co-inventor of the present application, Rolf Halden, of which the entire contents of each are incorporated herein by reference in their entirety.

[0002] Related technology is also disclosed in U.S. Pat. No. 7,662,618 issued on Feb. 16, 2010, entitled "Method and Apparatus for Environmental Monitoring and Bioprospecting," a US patent application having publication number 2007/0161076, published Jul. 12, 2007, entitled "Methods and Systems for Sampling, Screening, and Diagnosis," and a US patent application having publication number 2010/0159502, published on Jun. 24, 2010, entitled "Method and Apparatus for Environmental Monitoring and Bioprospecting," of which the entire contents of each are incorporated herein by reference in their entirety.

STATEMENT REGARDING US FEDERALLY SPONSORED RESEARCH OR DEVELOPMENT

[0003] This invention was made with Government support under grant number R01ES015445 awarded by the National Institute of Environmental Health Sciences (NIEHS). The Government has certain rights in this invention.

TECHNICAL FIELD

[0004] The present invention relates to a method for contaminant sample collection in aquatic or saturated sedimentary environments and to a method for enabling the determination of kinetic rates within a fluid of interest. More particularly, the invention relates to a method for the acquisition of samples that accurately represent the bioavailability of pollutants in aquatic and water saturated sedimentary environments.

BACKGROUND

[0005] Persistent contaminants may be present in very low environmental concentrations and yet exert considerable effects on living organisms through the phenomenon of bioaccumulation. Current sample collection, preparation, and analysis practices in environmental engineering that characterize the bioavailability of such compounds may underestimate or overestimate the actual concentrations affecting aquatic or sedimentary biota exposed to such compounds.

[0006] Contamination of U.S. surface water sediments is a daunting problem requiring novel solutions for monitoring and remediation. According to the U.S. Environmental Protection Agency (EPA), some 1.2 billion cubic yards of U.S. surficial water sediments (i.e., as found in the top 5 cm of the water surface) are contaminated with toxic pollutants to a degree that poses potential risks to fish as well as to fish-consuming wildlife and humans. Whereas the presence of contaminants in sediments warrants investigation to protect ecosystems and public health, it has long been appreciated that sediment pollution does not necessarily pose a risk that is directly proportional to the mass of contaminants present. Instead, the bioavailability of the pollutants is key information that needs to be known to inform risk assessments for potential human health impacts.

[0007] The need for bioavailability data has triggered a renewed interest in the development of novel sampling strategies for the determination of truly dissolved contaminant mass in both bulk water and pore water. Due to partitioning and sorption of contaminants to sediment constituents, including organic carbon, black carbon and soot, the bioavailable contaminant mass of organic pollutants in the dissolved or easily desorbable state typically is only a small fraction of the total mass of the respective contaminant in sediment (typically determined via extraction at high temperature and/or pressure with aggressive organic solvents).

[0008] A number of passive sampling strategies have been introduced to enable convenient and inexpensive determination of contaminant concentrations in sediment pore water and bulk water of polluted aquatic environments. While these systems represent a significant advance in environmental monitoring, they also have a number of limitations. Passive samplers which are based on polyethylene and similar sorbents typically capture only a limited spectrum of contaminants and may require performance reference compounds (PRCs) to produce reliable results. Converting analyte mass on the sampler to units of concentration also can be challenging. They also are fragile and may be subject to biodegradation during in situ incubation.

[0009] As disclosed in the applications referenced above, FIGS. **1**A and **1**B provide a schematic of a prior art device in use. Environmental water enters the device **1** through the water intake zone **103**. Water is collected in the optional multi-channel reservoir **105** concomitantly during the time period of sampling if desired, either short or long term. During sampling, the pump **107** is used to apply the sample to the non-aqueous collection matrix cartridges **111** at the appropriate flow rate and to deliver, a split sample to the optional reservoir **105** if desired. The separation process is demonstrated schematically. The reservoir includes spots of four different shades of gray. After passing through the pump and contacting the non-aqueous collection matrix columns **111**, each of the columns has turned the same shade of gray as one of the spots, representing that each column binds a specific analyte. As in the previous figure, the water from the columns is discharged either above or below the sampling zone to prevent contamination of the sample. It is understood that some types of non-aqueous collection matrices can bind more than one analyte.

[0010] Still referring to the referenced patent applications, FIGS. **2**A and **2**B provide a schematic of an individual non-aqueous collection matrix column **111** that binds a single analyte. Prior to exposure to the sample, the non-aqueous collection matrix includes multiple empty analyte binding sites **301**. After contacting the non-aqueous collection matrix with the sample **303**, the analyte **305** that specifically binds the non-aqueous collection matrix is bound to the non-aqueous collection matrix in the column. The analytes or other components of the sample that do not bind the non-aqueous

collection matrix **307**, passes through the column without binding to the non-aqueous collection matrix.

[0011] Still referring to the referenced patent applications, FIGS. **3**A and **3**B show a prior art sampling device wherein a real time sensor **401** is attached to the non-aqueous collection matrix column **403** to allow for detection of the analyte **405** bound to the column. In the embodiment, the real time sensor is further connected for signal transmission, with wire **407** or wirelessly, to a data logger to record the presence of the analyte bound to the sensor. Data can be sent to the data logger at timed intervals, continuously, upon a certain event such as saturation of the column. In an embodiment, a real time sensor can be used to analyze the liquid and the constituents therein **409** that do not bind to the column. In one embodiment, the liquid and the constituents contained therein **409** also can be diverted to the reservoir **105** for a post-deployment determination of the collection efficiency of the non-aqueous collection matrix cartridges **111**.

[0012] In environmental studies, it also is desirable to obtain a series of time-discrete samples to enable the calculation of rates, for example, of biotransformation and pollutant destruction. Currently, this requires the acquisition, storage and analysis of multiple fluid samples, analysis results of which can inform the rate determination calculations. Storage of large volumes of fluids can be problematic when space is limited or when the analytes of interest are labile and subject to ready disintegration. The present disclosure provides new and novel solutions to overcome the problems inherent in the art related to storing large volumes of unstable liquids. Here disclosed is a method that enables rate determination without requiring the storage and preservation of multiple fluid samples. Although the referenced patent applications disclose technology that has advanced the art, improvement is needed particularly for measurements carried out in aquatic and saturated sedimentary environments. The present disclosure provides new and novel solutions to overcome the limitations inherent in the art. These apparatuses and methods are suitable to make measurements of bioavailability of pollutants. As such, they enable a determination of whether a given environment is posing risks to humans and other biological species due to pollutants that have accumulated in sediments. This information is critically needed by regulatory agencies overseeing and consulting firms serving potentially responsible parties (PRPs) for environmental pollution.

[0013] Additionally, it is important to determine information on the kinetics of reactions and processes of interest to address the growing public concern about environmental contamination and its impact on health, agriculture, water supplies and other detrimental effects in the U.S. and around the world. As a result, it is becoming increasing important to demonstrate the effectiveness of environmental remediation processes, even long after a particular remediation site may have been shut down, for example. It is desirable that measurements provide accurate proof of long-term effects and not just discrete time samples (a.k.a. grab samples) or time-average samples, which may or may not be acceptable as reliable evidence of effectiveness in a legal setting, for example.

BRIEF SUMMARY OF THE DISCLOSURE

[0014] This summary is provided to introduce a selection of concepts in a simplified form that are further described below in the Detailed Description. This summary is not intended to identify key features of the claimed subject matter, nor is it intended to be used as an aid in determining the scope of the claimed subject matter.

[0015] In one aspect, a method for contaminant mass collection in saturated sedimentary environments for bioavailability determination is disclosed. The method includes securing a casing including a screen to a shell to form an in situ device, where the casing provides a permeable interface between the environment that is subject to sampling and the shell and where the casing and shell hold a water intake zone, at least one pump, sorptive media, and wherein the water intake zone, the at least one pump, the screen and the sorptive media, are all operably linked in sequence, and the screen is in fluid communication with the water intake zone so as to exclude sediments and aquatic life of a size predetermined by the pores of the screen and endemic to the selected environment. The in situ device is deployed in the selected environment, wherein the selected environment includes a saturated sedimentary environment. The pump operates to concentrate analytes from the selected environment in the sorptive media, where the concentrated analytes include the analyte mass of time-weighted fluid samples.

[0016] In one aspect the pump comprises a multi-channel pump.

[0017] In one aspect the at least one channel comprises at least two extraction cartridges in series containing the same sorptive media.

[0018] In one aspect deploying the in situ device includes vertically deploying the in situ device.

[0019] In another aspect vertically deploying the in situ device comprises direct-push deployment or augering.

[0020] In yet another aspect, the method further includes filtering the water intake to exclude colloidal particles larger than transported or dissolved species in the selected environment.

[0021] In yet another aspect, the sorptive media is selected (ii) to simulate uptake of pollutants into biological organisms or (iii) for optimal collector efficiency, including concentration of contaminants that exist in concentration levels below the detection limits of conventional laboratory methods for competitive sample volumes.

[0022] In yet another aspect, the method includes operating the pump to concentrate analytes to collect depth-discrete samples from pore water in saturated sediments in situ.

[0023] In yet another aspect, the method includes time-averaged collection of said samples over arbitrary periods of time, and analysis of transport phenomena (e.g., dissolved vs. particulate).

[0024] In yet another aspect, deploying the in situ device comprises placing the in situ device in a sediment, keeping it buried in the sediment until the interstitial water between the mesh and the casing of the in situ device is in equilibrium with the pore water of the sediment, and activating the pump to pass the water through the sorptive media.

[0025] In yet another aspect, the method includes operating the pump continuously at flow rate so that withdrawn water is replaced in the interstitial volume by pore water from the sediment.

[0026] In yet another aspect, the method includes operating the pump intermittently so as to pass the entire volume of the interstitial water through the extraction cartridges.

[0027] In yet another aspect, the method includes using a piece of tubing running from the in situ device up to the bulk water to enable replacement of the withdrawn volume of water.

[0028] In yet another aspect, the concentrated analytes include a concentration of pollutants that sediment-dwelling biota are exposed to.

[0029] In yet another aspect, the method includes collecting bulk water concentrations.

[0030] In yet another aspect, the method includes measuring a contaminant ratio of bulk water to pore water.

[0031] In yet another aspect, the method includes determining of pollutant concentrations in pore water and pollutant concentrations in bulk water combined with analyzing of resident, sediment dwelling biota (e.g., worm) and resident bulk-water dwelling biota; and

[0032] calculating approximate pollutant concentrations in biota living in sediment and bulk water, respectively.

[0033] In yet another aspect, the method includes predicting a level of exposure for organisms that are in contact with both bulk water and sediment pore water by computing an additional bioaccumulation factor to predict their level of exposure and body burden.

[0034] In yet another aspect, the at least one pump comprises a multi-channel pump.

[0035] In yet another aspect, pore water taken into the in situ device is fractionated into (i) unfiltered pore water, (ii) filtered pore water, and (iii) ultra-filtered, colloid-depleted pore water.

[0036] In yet another aspect, parallel selected extraction resins are used in parallel to extract contaminant groups including ionic, non-ionic and differing hydrophobic properties.

[0037] In yet another aspect, the method includes elution of the extracted contaminant groups followed by toxicity assays.

[0038] Also disclosed is a device for contaminant mass collection in saturated sedimentary environments for bioavailability determination including

[0039] a casing comprising a water intake zone wherein the casing encloses,

[0040] a pump, and

[0041] sorptive media, wherein the water intake zone, the pump, and the

[0042] sorptive media, are all operably linked in sequence; and

[0043] a screen providing an interface between the device and the environment.

[0044] In one aspect the screen includes a mesh sleeve encasing a cage, the mesh sleeve being in fluid communication with the water intake zone, the mesh sleeve having a mesh size selected to exclude sediments and aquatic life endemic to the environment.

[0045] In one aspect the in situ device includes a cone or auger attached to one end of the device.

[0046] In another aspect, the in situ device further includes a plurality of filters proximate to the water intake and sized to exclude colloidal particles, where the colloidal particles are larger than transported or dissolved species in the environment in which the device is deployed.

[0047] In another aspect the in situ device screen has an entrance closed by a solid or mesh lid.

[0048] In one example of the invention, a method for enabling the determination of kinetic rates within a fluid of interest is disclosed including directing fluid flow exiting a test bed to a multi-port switching valve;

[0049] controlling the multi-port switching valve to switch the fluid to each of a plurality of channels for a selected time duration;

[0050] connecting each of the plurality of channels to at least one in-flow extraction cartridge;

[0051] concentrating analytes of interest from the fluid flow;

[0052] capturing the analytes of interest on at least one extraction medium; and

[0053] determining rates by (i) sequentially channeling the fluid through the extraction flow paths, (ii) retrieving the charged extraction cartridges, (iii) analyzing the extraction cartridges, and computing the kinetic rate of interest.

[0054] In another example of the invention, analytes are trapped on the extraction media and the fluid, depleted of the analytes of interest, is emptied into the environment, a temporary holding bladder, or individual effluent bags.

[0055] In another example of the invention, the kinetic rate of interest comprises the slope of a straight line on a linear or log-linear data plot.

[0056] In another example of the invention, the at least one in-flow extraction cartridge comprises a plurality of extraction media that can be arranged in parallel or in sequence.

[0057] Another example of the invention further comprises (i) preserving of labile analytes of interest on extraction media for stabilization, (ii) determination of kinetic rates of interest, and does so (iii) without requiring retrieval and analysis of the fluid flow subsamples.

[0058] In another example of the invention a system for enabling the determination of kinetic rates within a fluid of interest comprising:

[0059] a conduit for directing fluid flow exiting a test bed to a multi-port switching valve;

[0060] a controller coupled to the multi-port switching valve to control switching the fluid to each of a plurality of channels for a selected time duration;

[0061] wherein each of the plurality of channels is coupled to at least one in-flow extraction cartridge having at least one extraction medium for concentrating analytes of interest from the fluid flow to capture the analytes of interest on the at least one extraction medium; and

[0062] a processor for determining rates by (i) sequentially channeling the fluid through the extraction flow paths, (ii) retrieving the charged extraction cartridges, (iii) analyzing the extraction cartridges, and computing the kinetic rate of interest.

BRIEF DESCRIPTION OF THE DRAWINGS

[0063] While the novel features of the invention are set forth with particularity in the appended claims, the invention, both as to organization and content, will be better understood and appreciated, along with other objects and features thereof, from the following detailed description taken in conjunction with the drawings, in which:

[0064] FIGS. **1**A and **1**B are schematics illustrating the collection of time integrated samples in a groundwater monitoring well and concomitant concentration of various analytes in multiple sampling collectors of the prior art.

[0065] FIGS. **2**A and **2**B are schematics of a prior art embodiment of the analyte collector showing the concentration of a specific analyte from groundwater over time.

[0066] FIGS. **3**A and **3**B are schematics of a prior art embodiment of the analyte collector equipped with a real-time sensor suitable for in situ detection of analytes concentrated from groundwater.

[0067] FIG. **4** schematically shows an example of a device deployed in sediment for simultaneous sampling of bulk and pore water at differing flow rates.

[0068] FIG. **5**A schematically shows an example of a typical embodiment of the inner workings of a device constructed along the principles disclosed in the related patent applications referenced hereinabove (an "IS2 device"), in which liquid is drawn in through an aperture or tube by a pump and pass through sorptive media cartridges in series and/or parallel.

[0069] FIG. **5**B schematically shows a further example of a typical embodiment of an IS2 device enclosed in its deployment shell.

[0070] FIG. **5**C schematically shows an example of a novel in situ sampling device of the present disclosure which is based on a modification of the IS2 device (an "ISB2 device") featuring a cage or frame added to an IS2 device for deployment of in an aquatic or sedimentary environment.

[0071] FIG. **5**D schematically shows an example of a novel ISB2 device is shown featuring a mesh sleeve in which it is inserted.

[0072] FIG. **5**E schematically shows an example of an operable IS2B device is shown, framed and enclosed in a mesh sleeve, for deployment in an aquatic or sedimentary environment.

[0073] FIG. **6** schematically shows an example deployment of a novel modified IS2 device in a saturated sediment.

[0074] FIG. **7**A schematically shows an example of horizontal deployment of a modified IS2 device in a saturated sediment.

[0075] FIG. **7**B schematically shows an example of vertical deployment by direct push or by augering in a saturated sediment.

[0076] FIG. **8** schematically shows an example of cartridges coupled in series as used in one example embodiment.

[0077] FIG. **9** schematically shows an example of a method for enabling the determination of kinetic rates within a fluid of interest without requiring storage and analysis of said liquid.

[0078] FIG. **10** schematically shows an example of system for enabling the determination of kinetic rates within a fluid of interest.

[0079] FIG. **11** schematically shows an example of data analysis for the determination of kinetic rates within a fluid of interest.

[0080] FIG. **12** represents a hypothetical example of data analysis for the determination of kinetic rates in a logarithmic plot for assessing first-order rate kinetics.

[0081] FIG. **13** represents an example of experimental results for time discrete monitoring of perchlorate and nitrate containing liquids reflective of an industrial site to which sodium acetate (Na acetate) was added to effect biologically mediated contaminant removal.

[0082] FIG. **14** represents an example of experimental laboratory results substantially replicating time discrete monitoring of monitored natural attenuation (MNA) from an industrial site.

[0083] FIG. **15** represents an example of experimental laboratory results substantially replicating composite effluent analysis of effluents of microcosms reflective of an industrial site.

[0084] FIG. **16** represents an example of experimental laboratory results substantially comparing the process of rate determination for an industrial site using time discrete sampling versus composite sampling.

[0085] In the drawings, identical reference numbers identify similar elements or components. The sizes and relative positions of elements in the drawings are not necessarily drawn to scale. For example, the shapes of various elements and angles are not drawn to scale, and some of these elements are arbitrarily enlarged and positioned to improve drawing legibility. Further, the particular shapes of the elements as drawn, are not intended to convey any information regarding the actual shape of the particular elements, and have been solely selected for ease of recognition in the drawings.

DETAILED DESCRIPTION OF THE PREFERRED EMBODIMENTS

[0086] The following disclosure describes several embodiments and systems for contaminant mass collection in saturated sedimentary environments for bioavailability determination and for enabling the determination of kinetic rates within a fluid of interest. Several features of methods and systems in accordance with example embodiments are set forth and described in the Figures. It will be appreciated that methods and systems in accordance with other example embodiments can include additional procedures or features different than those shown in the Figures. Example embodiments are described herein with respect to analysis of environmental conditions. However, it will be understood that these examples are for the purpose of illustrating the principles, and that the invention is not so limited. Additionally, methods and systems in accordance with several example embodiments may not include all of the features shown in the Figures.

[0087] Unless the context requires otherwise, throughout the specification and claims which follow, the word "comprise" and variations thereof, such as, "comprises" and "comprising" are to be construed in an open, inclusive sense that is as "including, but not limited to."

[0088] Reference throughout this specification to "one example" or "an example embodiment," "one embodiment," "an embodiment" or combinations and/or variations of these terms means that a particular feature, structure or characteristic described in connection with the embodiment is included in at least one embodiment of the present disclosure. Thus, the appearances of the phrases "in one embodiment" or "in an embodiment" in various places throughout this specification are not necessarily all referring to the same embodiment. Furthermore, the particular features, structures, or characteristics may be combined in any suitable manner in one or more embodiments.

DEFINITIONS

[0089] Generally, as used herein, the following terms have the following meanings when used within the context of contaminant sample collection in aquatic or saturated sedimentary environments:

[0090] "Aquatic environment" has its generally accepted meaning and is intended to include an environmental compartment occupied by a fluid, such as a bulk liquid or bulk water.

[0091] "Saturated sedimentary environment" has its generally accepted meaning and is intended to include an environ-

mental compartment occupied by a mixture consisting of at least one fluid and at least one solid, for example, a heterogeneous mixture of liquids and solids such as sediment of a surface water (e.g., a lake) containing sediment and tissue from biota.

[0092] "IS2 system or IS2 device" means a device constructed along the principles disclosed in the related patent applications referenced hereinabove.

[0093] "IS2B system or IS2B device" means the new and novel in situ sampling device of the present disclosure that is based on a modification of the IS2 device.

[0094] "Analyte" is understood as any compound that may be present in a sample that can be captured using a non-aqueous collection matrix and detected using an assay or method.

[0095] By "cartridge" is meant a container enclosing the solid matrix through which the sample is passed through or over. The solid matrix is enclosed in the cartridge to allow the sample to pass through the cartridge, for example into an inlet port and out of an outlet port, wherein the solid matrix is retained within the cartridge.

[0096] By "concentration" or "concentration of the analyte" as used herein is understood as decreasing the volume in which a given mass of an analyte is present. For example, decrease the volume in which the given mass analyte is present by at least at least 2-fold, at least 10-fold, at least 102-fold, at least 103-fold, at least 104-fold, or at least 105-fold.

[0097] "Contacting" as used herein is understood as bringing two components into sufficient proximity (e.g., a groundwater sample containing or potentially containing an analyte and a non-aqueous collection matrix that can bind the analyte, a fluid sample and the water intake zone of the device) for sufficient time and under appropriate condition of temperature, pressure, pH, ionic strength, etc. to allow for the interaction of the two components, e.g., the binding of the analyte to the non-aqueous collection matrix, the entry of water into the device through the water intake zone. Contacting in the context of the invention typically occurs in a non-aqueous collection matrix container such as cartridge, column, or other device that allows the water to flow through the container in a path to allow the water to contact the non-aqueous collection matrix. Contacting a non-aqueous collection matrix cartridge is understood as contacting the matrix within the cartridge with the fluid sample.

[0098] "Control system" as used herein is understood as a device such as a computer or recording device. The control system can be used predominantly for mechanical uses, such as positioning the device in the well. The control system can also be used for turning on and off various components of the device, such as the pump, opening and closing fluid lines in the pump, directing collection of a time integrated or time discrete sample, etc. The control system can also be used for the purpose of data collection in the form of electronic data, or by attachment to a chart recording device. The control system can be physically attached to the device by wires or cables. Alternatively, a wireless control system can be used with the device.

[0099] As used herein, "detecting", "detection" and the like are understood as an assay or method performed for identification of a specific analyte in a sample. The amount of analyte detected in the sample can be none (zero) or below the limit of detection (<LOD), positive and within the calibrated range, or positive and outside of the calibrated range of the assay or method.

[0100] "Distal" is understood herein as meaning further away than, typically relative to the device of the invention. For example, a waste line that empties distal to an inflatable liner empties on the far side, i.e., the opposite side, of the liner when viewed from the device. The side of the inflatable liner facing the device would be "proximal" to the device.

[0101] "Dry sample" as used herein is understood as the non-aqueous collection matrix cartridge after it has made contact with a fluid sample, such as groundwater or surface water, wherein at least one analyte is suspected of or known to be bound to the non-aqueous collection matrix in the cartridge. A dry sample can contain water or other fluid. All moisture does not need to be evacuated from the cartridge. However, the sample contains no more fluid that will fit in the cartridge with the non-aqueous collection matrix present in the cartridge. Both time-discrete samples and time-integrated samples can be converted to dry samples by use of a non-aqueous collection matrix cartridge. Conversion of aqueous to dry samples may occur in the subsurface (i.e., in situ) or on-site prior to shipping of samples.

[0102] "In situ" as used herein is understood as in the subsurface, preferably at or near the site that the sample is collected. "At or near the site that the sample is collected" is understood as at the same or similar depth such that pressure changes have little or no effect on the sample from the time that the sample is collected to the time that the sample is contacted with the non-aqueous matrix. It is understood that lateral movement within the well will typically have far less effect on pressure in the sample than movement in the depth in the well. In situ contacting of samples with a non-aqueous matrix is differentiated from contacting the non-aqueous matrix with the sample at the surface (i.e., ground level) when the sample is collected in the subsurface. It is understood that contacting surface water with the non-aqueous matrix at the site of collection (i.e., at ground level) is understood as contacting the sample with the matrix in situ.

[0103] As used herein, "interchangeable" is understood as the device being designed so that one or more components of the device can be readily exchanged for a similar component. For example, lines and non-aqueous collection matrix cartridges can be joined using bayonet connectors, rapid release connectors, quick connectors, screw connectors, compression connectors, Luer lock, or other similar type connectors that require no tools for the separation or connection of components. Further, non-aqueous collection matrix cartridges can be exchanged depending on the site of groundwater to be tested, the type and quantity of analyte to be detected, and the quantity of water to be tested. Similarly, tubing or other connectors for example from the pump to the non-aqueous collection matrix cartridges may be changed depending on the analyte to be detected to prevent adsorption into the tubing, or the volume or flow rate of the water to be tested. Interchangeable parts such as tubing or cartridges can be disposable. Such considerations are well understood by those of skill in the art.

[0104] As used herein, "in vivo microcosm array" (IVMA) is understood to include a sampler or testing device as shown in FIG. **9-10**, its principal components include: a test bed **650** in fluid communication with a multi-port switching valve **600**. The multi-port switching valve **600** is controlled to switch the fluid to a plurality of channels A, B, C etc., wherein

the plurality of channels includes at least two channels. Each of the plurality of channels is connected to at least one in-flow extraction cartridge **602**. Analytes of interest from the fluid flow are concentrated in the at least one in-flow extraction cartridge **602**. The at least one in-flow extraction cartridge **602** may advantageously contain at least one extraction medium **604** for capturing the analytes of interest. IVMAs may preferably be miniaturized for in vivo applications, such as, for example, implanting to or affixing on the body of a living organism.

[0105] As used herein, "non-aqueous analyte collection matrix", "matrix", "resin", and the like are understood as material or a mixture of materials that are designed to come into contact with the fluid sample and, through their relatively greater affinity relative to water, will remove and concentrate the analyte or analytes of interest from the fluid sample including dissolved solid, gas, and particulate materials of interest. For example, groundwater or surface water can be passed through, over, or mixed (i.e., contacted) with the non-aqueous analyte collection matrix, thereby causing this matrix to bind and concentrate one or more analytes. It is understood that the binding properties of the materials for one or more specific analytes can depend on various properties of the sampled fluid, for example, ionic strength, pH, etc. The material can bind the analyte(s) specifically, e.g., the chelator EDTA for binding of heavy metals, peptide metal binding motifs, antibodies for binding desired antigens, molecular pockets formed by molecular imprinting, or specific and non-specific binding sites relying on van-der-Waals forces, hydrophobic interaction, hydrophilic interaction, mixed-mode interaction, hydrogen bridges, affinity binding sites, etc. Alternatively, the material can bind the analyte(s) based on charge, e.g., cation exchange, anion exchange or mixed-mode ion exchange materials. The analyte collection matrix does not need to be a solid. It can be a non-aqueous liquid, a gel or a semi-solid that attracts and concentrates the analytes by the mechanisms mentioned above as well as by chemical partitioning out of the water and into the analyte collection matrix. The matrix can be contacted with the liquid sample in any known format, including a column, bulk binding, etc. Such methods are well known to those of skill in the art.

[0106] "Obtaining" is understood herein as manufacturing, purchasing, or otherwise coming into possession of.

[0107] "Operably linked" is understood as a connection, either physical or electronic, between two components of the device, or a component of the device and a remote sensor, data collector, controller, computer, or the like such that the components operate together as desired. For example, a fluid line operably linked to a non-aqueous collection matrix cartridge is understood as a fluid line that delivers fluid to the non-aqueous collection matrix cartridge without loss of fluid and at the desired flow rate. A device operably linked to the controller can be moved to the desired position in the well, and the pump or other components of the device can be turned on or off using the controller.

[0108] As used herein, "plurality" is understood to mean more than one. For example, a plurality refers to at least two, three, four, five, ten, 25, 50, 75, 100, or more.

[0109] As used herein, "real time" is understood as while the process is occurring, for example, collecting data, and preferably transmitting data to a device or person, at the same time the sample is being collected. The data need not be transmitted instantaneously, but is preferably transmitted within about 1 minute, 2 minutes, 5 minutes, 10 minutes, 15 minutes, or 30 minutes from the time that it was collected, or the collection of the data packet was completed. Data can be sent continuously or periodically in real time for monitoring the progress of a process, or can be sent episodically, e.g., upon overload of a non-aqueous collection matrix cartridge, failure of the device, detection of water table, completion of in well purge, etc.

[0110] A "sample" or "fluid sample" as used herein refers to a material, particularly ground water, bulk water, pore water or surface water that is suspected of containing, or known to contain, an analyte. A fluid sample can include dissolved gases, as well as any dissolved or particulate solids. Methods and devices of the invention can be used for the collection of gases as well as dissolved or particulate solids upon selection of the appropriate non-aqueous collection matrix. A reference sample can be a "normal" sample, from a site known to not contain the analyte. A reference sample can also be taken at a "zero time point" prior to contacting the cell with the agent to be tested. A reference sample can also be taken during or after collection of a time integrated sample. A reference sample is typically a time discrete sample when it is collected at the same site as a time integrated sample.

Example Embodiments

[0111] Referring now to FIG. **4**, an example of a method for the acquisition of samples that accurately represent the bioavailability of pollutants in aquatic and water saturated sedimentary environments. There shown is an in situ sampling device **10** vertically deployed partially in sediment **40** and partially in pore water **30**. The in situ sampling device **10** includes a first intake **12** and a second intake **14** coupled together by casing **16**. A cone **15**, auger or the like is attached to one end for placement in the sediment **40** or like environments. Flow is indicated by arrows **11**, **11**A. Both flow rates are controlled by pumps (as shown in FIG. **1**A, for example) which are, in turn controlled by a (not shown) controller, such as a personal computer, electronic circuitry, ASIC or the like. The in situ sampling device is coupled to control lines **21** running in or along a tether **20** which is used during placement and removal of the device. The tether **20** and the control lines **21** are optional, as the device in another embodiment also can be operated autonomously with the controls built into the device shell.

[0112] In example embodiments the device may advantageously be operated (i) to effect the deployment of sorptive media in aquatic and saturated sedimentary environments, in which said media may be selected (ii) to simulate uptake of pollutants into biological organisms or (iii) for optimal collector efficiency, including concentration of contaminants that exist in concentration levels below the detection limits of conventional laboratory methods for competitive sample volumes.

[0113] In further example embodiments the in situ sampling device may advantageously be operated (iv) to collect depth-discrete samples from pore water in saturated sediments in situ, (v) for time-averaged collection of said samples over arbitrary periods of time, and (vi) for analysis of transport phenomena (e.g., dissolved vs. particulate).

[0114] Active sampling of water using an electric pump is technically more challenging but can address some of the shortcomings of passive samplers. As referenced in the pending patent applications above, a strategy for obtaining time-averaged concentrations of bulk water was introduced recently by co-inventor Halden in the form of an in situ

sampler (herein referred to as the IS2 system). Obtaining time-averaged concentrations of contaminants has the obvious benefit of avoiding measurement bias due to unrepresentative grab sampling. The IS2 system acquires and extracts water in situ during sampler incubation. This makes it very cost effective because only the contaminant-charged solid phase extraction (SPE), cartridge is shipped for analysis instead of large amounts of water. It also enables simultaneous parallel processing of water with and without filtration to determine total, suspended and colloidal contaminant mass. In addition, contaminants immobilized on the SPE cartridges have a longer holding time, which affords the freedom of leaving the samples at room temperature for extended periods of time without measurable loss of analyte mass. The active sampling approach is applicable to a broad range of organic and inorganic contaminants ranging from infinitely water-soluble chemicals (that are captured for example by ion exchange resins) to highly hydrophobic organic pollutants that are captured by molecularly imprinted polymers, activated carbon, C_{6-18} sorbents, and specialized extraction resins, many of which are commercially available.

[0115] In the instant in situ device (herein sometimes referred to as IS2B, the advantages of bulk water sampling in the IS2 system are paired with additional benefits for pore water analysis, as disclosed in pending U.S. patent application Ser. No. 12/702,033. By using multi-channel pumps, pore water taken into the IS2B device can be fractionated into (i) unfiltered pore water, (ii) filtered pore water, and (iii) ultra-filtered, colloid-depleted pore water. In addition, parallel use of selected extraction resins enables the selected (targeted) extraction of contaminant groups of (iv) ionic, (v) non-ionic and (vi) differing hydrophobic properties. Elution of these contaminant fractions followed by toxicity assays can inform on the type and identity of unknown toxicants in a process analogous to the Toxicity Identification Evaluation (TIE) approach as described by co-inventor Halden (Editor) in the publication entitled "Contaminants of Emerging Concern: Ecotoxicological and Human Health Considerations." Oxford University Press, New York, N.Y. 620pp. 2010.

[0116] In one example embodiment, the in situ method and device informs on sediment contaminants of great ecological and human health significance including organohalide compounds (OHCs), and more particularly, organochlorine pesticides (OCPs) which are persistent hydrophobic contaminants that are ubiquitous in many sediments. These contaminants bioaccumulate in higher predators and can produce a range of toxic responses from lethality to endocrine disruption. Important contaminants found at one proposed IS2B deployment site, Lake Apopka, Fla., include p,p'-DDE and dieldrin, ranking #21 and #17, respectively, on the 2010 CERCLA Priority List of Hazardous Substances. These compounds are present at high levels in soils and in fish in the Lake Apopka/muck farm area as well as at many other sites around the United States. Emerging contaminants also pose significant risks and will be examined here. The hexa-fluorinated insecticide fipronil and its derivatives are known to be persistent, bioaccumulative and toxic. The two antimicrobial compounds triclosan and triclocarban are persistent, bioaccumulative, toxic, and endocrine disrupting contaminants of sediments, surface waters and soils nationwide and also are known or suspected to promote cross-resistance to life-saving antibiotics used in human medicine. In addition, both triclosan and triclocarban have been found to occur in U.S. sediments at concentrations orders of magnitude above those of OCPs. Due to their antimicrobial properties, they are suspected to inhibit microbial activity and biodegradation of EPA priority pollutants, including DDE and dieldrin.

[0117] Referring now to FIG. **5**A-FIG. **5**E, there shown is a partially cut-away view of an example embodiment of the intake of a device for contaminant mass collection in aquatic or saturated sedimentary environments for bioavailability determination. The intake screen shown in FIG. **5**A, can be operably linked to an IS2 device to concentrate on solid phase extraction media the analyte mass of time-weighted fluid samples.

[0118] As shown in FIG. **5**C, the intake of an in situ device is modified for deployment in a body of water or in saturated sediment. A cage **50** is provided that secures the device and provides a permeable interface between the device and the environment.

[0119] As shown in FIG. **5**D a mesh sleeve **52** encases the cage **50** and provides a route by which water may reach the device, while sediments and aquatic life are excluded. The material and pore size of the mesh may be selected by those skilled in the art as appropriate for local environmental conditions.

[0120] Referring now to FIG. **5**E, the entrance to the mesh sleeve **52** is closed by a solid or mesh lid **54**.

[0121] Referring now to FIG. **6**, having described the in situ device in detail, the operation of the device will now be described to promote further understanding of the invention. An in situ device **10**A may be deployed at any depth in a body of water **100** or may be embedded (i.e., buried) in sediment **110**. Influent enters through one tube or aperture and effluent is released distally to prevent short-circuiting.

[0122] Referring now to FIG. **7**A, there shown in an in situ device deployed horizontally in sediment. When deployed in sediment **110**, the in situ device **10**A may be deployed horizontally to collect samples from near-surface sediment layers **110**S.

[0123] Now referring to FIG. **7**B, collection from deeper layers D**1**, D**2** may be accomplished though vertical deployment. In vertical deployment, a cone **17** or auger **15** may advantageously be attached to the device, enabling direct-push deployment or augering to any depth. Filters may be included in the in situ device **10** to exclude colloidal particles, enabling the device to discriminate between transported and dissolved species. Influent enters through one tube or aperture and effluent is released distally to prevent short-circuiting.

[0124] In this way the device enables (i) the deployment of sorptive media in aquatic and saturated sedimentary environments, in which said media may be selected (ii) to simulate uptake of pollutants into biological organisms or (iii) for optimal collector efficiency, including concentration of contaminants that exist in concentration levels below the detection limits of conventional laboratory methods for competitive sample volumes. Furthermore, this technology enables (iv) the collection of depth-discrete samples from pore water in saturated sediments in situ, (v) time-averaged collection of said samples over arbitrary periods of time, and (vi) analysis of transport phenomena (e.g., dissolved vs. particulate).

[0125] Further disclosed are methods for using the IS2B device. In one scenario, the IS2B device is placed in a sediment, kept buried in the sediment until the interstitial water between the mesh and the casing of the device is in equilibrium with the pore water of the sediment, and the integrated pump in the device is then activated to pass the water through the IS2 extraction cartridges. The pump may be operated

continuously at a very slow flow rate. During pumping, the withdrawn water is replaced in the interstitial volume by pore water from the sediment. Alternatively, the pump may be operated intermittently to pass the entire volume of the interstitial water through the extraction cartridges. A piece of tubing running from the IS2B device up to the bulk water may serve to enable replacement of the withdrawn volume of water. This process of periodic charging can be repeated once or multiple times to achieve higher pollutant loading on the extraction cartridges and thus lower method detection limits. Use of the IS2B apparatus as described above can inform on the concentration of pollutants that sediment-dwelling biota, such as aquatic worms, are exposed to.

[0126] In another approach, the method consists of using the IS2B as described above and collecting bulk water concentrations at the same time with a regular IS2 device. Comparison of the results from both measurements can inform on the contaminant ratio of bulk water to pore water.

[0127] In yet another approach, use of the ISB2 device for determination of pollutant concentrations in pore water and the IS2 device for determination of pollutant concentrations in bulk water can be combined with analysis of resident, sediment dwelling biota (e.g., worm) and resident bulk-water dwelling biota (e.g., fish). Once the Biota Sediment Accumulation Factor (BSAF) and the Bioaccumulation Factor (BF) in bulk water have been determined, it is no longer necessary to harvest and sacrifice biological specimens to estimate the concentrations in them. Instead, the concentrations in bulk and pore water are determined conveniently with the IS2 and the ISB2 device, respectively, and the BSAF and BF factors are used to calculate approximate pollutant concentrations in biota living in sediment and bulk water, respectively.

[0128] For organisms that are in contact with both bulk water and sediment pore water (e.g., clams), additional BF may be computed to predict their level of exposure and body burden using the IS2 and ISB2 device.

[0129] Referring now to FIG. **8**, an example of cartridges coupled in series as used in one example embodiment. Fluid flow **125** is coupled a series of at least two in-flow extraction cartridges **111**. Each of the cartridges is filled with an extraction medium that scavenges (concentrates) an analyte of interest from the fluid flow passing through it. Analytes are trapped on the extraction media and the fluid, depleted of the analytes of interest, is emptied into the environment, a temporary holding bladder, or individual effluent bags.

[0130] In this useful embodiment, capture of the analyte is done by the at least two cartridges **111** coupled together in series. In order to determine whether a single cartridge is overloaded, each of the cartridges in series must contain the same resin or filtering media. The series configuration of cartridges will show complete capture of the analyte through determination of breakthrough behavior in the first cartridge to receive the flow. That is, if the first cartridge is oversaturated resulting in breakthrough of the analyte of interest, the second cartridge will capture the rest of the analyte. Presence of the analyte in the front extraction cartridge and absence of the analyte in the second (or third, fourth, etc.) cartridge, indicates that the mass of the analyte has been captured in its entirety, which in turn enables the calculation of average concentrations when considering the volume of water processed by the apparatus. Extracted analytes can be processed by processor **510**, where processor **510** may comprise a sensor apparatus (e.g., a gas chromatograph equipped with a suitable detector) and computer processor, such as a personal computer or the equivalent.

[0131] Referring now to FIG. **9**, an example of a method for enabling the determination of kinetic rates within a fluid of interest without requiring storage and analysis of said liquid is shown. The invention enables the miniaturization of diagnostic equipment such as in situ microcosm arrays (ISMAs) and in vivo microcosm arrays (IVMAs). In one embodiment, a method for enabling the determination of kinetic rates within a fluid of interest includes directing fluid flow **601** exiting a test bed **650** to a multi-port switching valve **600**. The multi-port switching valve **600** is controlled to switch the fluid to a plurality of channels A, B, C etc., wherein the plurality of channels includes at least two channels. Each of the plurality of channels is connected to at least one in-flow extraction cartridge **602**. Analytes of interest from the fluid flow are concentrated in the at least one in-flow extraction cartridge **602**. The at least one in-flow extraction cartridge **602** may advantageously contain at least one extraction medium **604** for capturing the analytes of interest. As described below, rates are determined by (i) sequentially channeling the fluid through the extraction flow paths where each flow path receives fluid for a pre-selected time duration, (ii) retrieving the charged extraction cartridges, (iii) analyzing the extraction cartridges, and computing the kinetic rate of interest.

[0132] In one example embodiment analytes are trapped on the extraction media and the fluid, depleted of the analytes of interest, is emptied into the environment, a temporary holding bladder, or individual effluent bags. In another example embodiment, as best shown in FIG. **11**, the kinetic rate of interest comprises the slope of a straight line derived from data analysis of the captured analytes from the extraction cartridges. In another example, the at least one extraction cartridge includes a plurality of extraction media that can be arranged in parallel or in sequence. In another example, labile analytes of interest may advantageously be preserved on the extraction media for stabilization, determination of kinetic rates of interest, without requiring retrieval and analysis of the fluid flow subsamples.

[0133] Referring now to FIG. **10**, there shown is a system for enabling the determination of kinetic rates within a fluid of interest. Fluid flow **601** exiting a test bed **650** (as shown in FIG. **9**) is coupled to a multi-port switching valve **600** controlled by a control unit **630**. The switching valve has at least 2 channels A, B, C, etc. Each channel is connected to an in-flow extraction cartridge **602** filled with at least one extraction medium **604**, as also shown in FIG. **9**, that scavenges (concentrates) analytes of interest from the fluid flow passing through it. Specific analytes of interest can be captured on different in-flow extraction cartridge(s) **602** and extraction media **604** that can be arranged in parallel or in sequence C. Analytes are trapped on the extraction media and the fluid, depleted of the analytes of interest, is emptied into the environment, a temporary holding bladder, or individual effluent bags.

[0134] Extracted analytes are processed by processor **510**, where processor **510** may comprise a sensor apparatus (e.g., a gas chromatograph equipped with a suitable detector) and computer processor, such as a personal computer or the equivalent. Rates are determined by the method of (i) sequentially channeling the fluid through extraction flow paths A, B, C, etc., (ii) retrieving the charged in-flow extraction cartridge

(s) **602** and extraction media **604**, (iii) analysis of the in-flow extraction cartridge(s) **602** and extraction media **604**, followed by analysis of the data and computation of the kinetic rate of interest, as described in more detail below in FIG. **11**. This method enables (i) the preservation of labile analytes of interest on extraction media for stabilization, determination of kinetic rates of interest (ii), and does so (iii) without requiring retrieval and analysis of the fluid flow subsamples.

[0135] This method is suitable for significantly reducing the dimensions of existing in situ microcosm array (ISMA) and in vivo microcosm array (IVMA) instrumentation as described in, for example, U.S. Pat. No. 7,662,618, US patent application having publication number 2007/0161076, and US patent application having publication number 2010/0159502, all of which are incorporated herein by reference in their entirety. For example, current embodiments of the ISMA have a length of over 20 feet; much of this length is necessitated as room for storage of liquids. Using the here disclosed method, the length of the ISMA device can be cut into less than a half. Similar benefits are expected for IVMA devices. To prevent short circuiting of liquids, processed fluids can be stored in a bladder in the groundwater monitoring well (ISMA), above ground (ISMA) or in bags within or outside of the body of the carrier of IVMA devices.

[0136] Referring now to FIG. **11**, a hypothetical example of data analysis for the determination of kinetic rates within a fluid of interest is schematically shown. Table 1 below presents hypothetical analysis data from labile analytes of interest extracted from a fluid sample as may be preserved of on extraction media. Curve **505** is a plot of measurements of the values of Table 1 along a time line of arbitrary units. In the example, the kinetic rate is proportional to the slope of curve **505**, which follows zero-order kinetics. If the data presented in the middle column of Table 1 would represent logarithmically transformed values (right column), then a plot of the values vs. time would represent a semi-log plot. The resultant slope of the straight line obtained then would represent the rate coefficient of a first-order reaction. Other kinetic reaction orders including second-order and mixed order could result from different data, as is evident for those skilled in the art. FIG. **12** illustrates a hypothetical logarithmic data plot **605**.

[0137] It may be advantageous to measure the values shown in Table 1 in real-time using a real-time sensor. The information obtained would be immediately available but would be of no or little regulatory value because the data were not obtained by a certified laboratory. To increase the value of the measurements obtained, the present invention allows for the collection of samples that can be submitted to a certified laboratory. Thus, the invention has value whether it is used by itself or in combination with a real-time sensor.

TABLE 1

Time	Value	Log Value
0	10	10
1	9	9
2	8	8
3	7	7
4	6	6
5	5	5
6	4	4
7	3	3

TABLE 1-continued

Time	Value	Log Value
8	2	2
9	1	1
10	0	
11	0	

Nammo Talley Laboratory Experiment

Site Description

[0138] In one experiment, a field demonstration was conducted at an industrial site located east of Phoenix, Ariz. in the arid southwest of the United States. The site has been the location of small explosives manufacturing since the 1960s. Disposal practices at the time have lead to the release of ammonium perchlorate into the soil matrix and groundwater resulting in contamination of both matrices above regulatory limits. The source area for the perchlorate contamination has been identified as a sludge bed and several monitoring wells have been installed.

[0139] The soil in the area is characterized by low organic carbon content and is mostly made up of silty sands and gravels, poorly and well graded sands, clayey sands and clayey gravels. The groundwater level is around 175 ft below ground surface and groundwater flow is generally to the southeast.

Experimental Setup—Laboratory Experiment

[0140] All laboratory experiments were conducted using the same equipment as used for the field experiments (glass columns, peristaltic pumps, Teflon storage bags, Viton tubing). Microcosms were packed with well graded sediment (0.5-1 mm grain size) obtained during the installation of well HPA-1 in 2009. The sediment had been stored at ambient temperature and was dried prior to processing. Since the sediment contained much higher concentrations of perchlorate contamination than the currently saturated zone in the source area, sediment was washed with site groundwater to remove excess perchlorate. Site groundwater containing about 604 μg/L perchlorate was used as the microcosm influent for laboratory experiments.

[0141] Since perchlorate is largely resistant to chemical treatment in situ and previous tests had shown a very low population of anaerobic microbes in native sediment at the site, experiments focused on bioaugmentation tests. The following experiments were conducted in the laboratory: 1) site sediment without amendment simulating monitored natural attenuation (MNA); 2) bioaugmentation with sewage sludge and biostimulation with ethyl lactate (carbon source and electron donor); 3) bioaugmentation with sewage sludge and biostimulation with sodium acetate (carbon source and electron donor). All experiments were conducted in triplicate. As a control influent groundwater was collected in the same fashion as microcosm effluent over the duration of the experiment without passing through sediment columns. All experiments were conducted simultaneously using the same source of site groundwater.

[0142] For bioaugmentation sewage sludge, obtained from 5 different US wastewater treatment plants, was mixed and amended with perchlorate to stimulate growth of microbes capable of perchlorate reduction. For the purpose of bioaug-

mentation, 1 mL of sewage sludge was added to each bioaugmentation microcosm at the beginning of the experiment. Ethyl lactate was added at 2.9 mM influent concentration in experiment 2; sodium acetate was added at 8.1 mM in experiment 3. To compare bioaugmentation to the effects of natural attenuation, three columns were operated without addition of carbon source or biomass (experiment 1). All microcosms were operated in up-flow mode at 15 μL/min flow.

The effluent of all microcosms was collected at room temperature in individual storage bags containing a microbial preservative (Kathon®, 0.5 mL/L effluent). In addition, time discrete samples of the effluent were collected periodically, sterile filtered, and analyzed for pH as well as concentration of perchlorate, nitrate, nitrite and sulfate.

[0143] After termination of the experiment, composite effluent samples were analyzed for the same parameters, and DNA was extracted from microcosm effluent as well as the column sediment.

[0144] Table 2 below lists the experimental data for the various effluents.

TABLE 2

Perchlorate	bypass [ug/L]	Conc. (final) [ug/L]	Time lapsed [days]	Rate k [ug/L-day]
Na acetate	492	0.01	2	246
	492	0.01	2	246
	492	0.01	2	246
	615	0.2	21	29.3
	548	10.3	21	25.6
	682	6.5	21	32.2
Ethyl lactate	492	0.01	4	122.9
	492	0.01	4	122.9
	492	0.01	4	122.9
	615	13.3	21	28.7
	548	12.9	21	25.5
	682	40.5	21	30.5
MNA	615	568	21	2.3
	548	420.5	21	6.1

[0145] The invention has been described herein in considerable detail in order to comply with the Patent Statutes and to provide those skilled in the art with the information needed to apply the novel principles of the present invention, and to construct and use such exemplary and specialized components as are required. However, it is to be understood that the invention may be carried out by different equipment, and devices, and that various modifications, both as to the equipment details and operating procedures, may be accomplished without departing from the true spirit and scope of the present invention.

What is claimed is:

1. A method for contaminant mass collection in saturated sedimentary environments for bioavailability determination, the method comprising:

securing a casing including a screen to a shell to form an in situ device, where the casing provides a permeable interface between the environment that is subject to sampling and the shell and where the casing and shell hold

a water intake zone,

at least one pump,

sorptive media, and

wherein the water intake zone, the at least one pump, the screen and the sorptive media, are all operably linked in sequence and the screen, is in fluid communication with the water intake zone so as to exclude sediments and aquatic life endemic to the selected environment;

deploying the in situ device in the selected environment, wherein the selected environment includes a saturated sedimentary environment; and

operating the pump to concentrate analytes from the selected environment in the sorptive media, where the concentrated analytes include the analyte mass of time-weighted fluid samples.

2. The method of claim **1** wherein the pump comprises a multi-channel pump.

3. The method of claim **1** wherein the pump is operatively coupled to at least two extraction cartridges in series containing the same sorptive media.

4. The method of claim **1** wherein deploying the in situ device comprises vertically deploying the in situ device.

5. The method of claim **4** wherein vertically deploying the in situ device comprises using direct-push deployment or augering.

6. The method of claim **1** further comprising filtering the water intake to exclude colloidal particles larger than transported or dissolved species in the selected environment.

7. The method of claim **1** wherein the sorptive media is selected (i) to simulate uptake of pollutants into biological organisms or (ii) for optimal collector efficiency, including concentration of contaminants that exist in concentration levels below the detection limits of conventional laboratory methods for competitive sample volumes.

8. The method of claim **1** wherein operating the pump to concentrate analytes includes collecting depth-discrete samples from pore water in saturated sediments in situ.

9. The method of claim **8** including time-averaged collection of said samples over arbitrary periods of time, and analysis of transport phenomena.

10. The method of claim **1** wherein deploying the in situ device comprises placing the in situ device in a saturated sediment until interstitial water between the screen and the casing of the in situ device is in equilibrium with the pore water of the saturated sediment, and activating the pump to pass the water through the sorptive media.

11. The method of claim **10** including operating the pump continuously at flow rate so that withdrawn water is replaced in the interstitial volume by pore water from the saturated sediment.

12. The method of claim **10** including operating the pump intermittently so as to pass the entire volume of the interstitial water through the extraction cartridges.

13. The method of claim **1** wherein the concentrated analytes includes a concentration of pollutants affecting sediment-dwelling biota.

14. The method of claim **1** further comprising deploying a part of the casing in an aquatic environment using a second water intake zone and collecting bulk water concentrations simultaneously while collecting pore water concentrations from saturated sediment.

15. The method of claim **14** further comprising measuring a contaminant ratio of bulk water to pore water.

16. The method of claim **14** further comprising determining of pollutant concentrations in pore water and pollutant concentrations in bulk water combined with analyzing of resident, sediment dwelling biota and resident bulk-water dwelling biota; and

calculating approximate pollutant concentrations in biota living in sediment and bulk water, respectively.

17. The method of claim **14** further comprising predicting a level of exposure for organisms in contact with both bulk water and sediment pore water by computing an additional bioaccumulation factor to predict their level of exposure and body burden.

18. The method of claim **1** wherein pore water taken into the in situ device is fractionated into (i) unfiltered pore water, (ii) filtered pore water, and (iii) ultra-filtered, colloid-depleted pore water.

19. The method of claim **18** further comprising using selected extraction resins in parallel to extract contaminant groups including ionic, non-ionic and differing hydrophobic properties.

20. The method of claim **19** further comprising elution of the extracted contaminant groups followed by toxicity assays.

21. The method of claim **1** wherein the screen is a mesh sleeve.

22. A device for contaminant mass collection in saturated sedimentary environments for bioavailability determination, the device comprising:

an in situ device including

a casing comprising a water intake zone wherein the casing holds,

a pump, and

sorptive media, wherein the water intake zone, the fluid reservoir, the at least one pump, and the non-aqueous collection matrix cartridge, are all operably linked in sequence; and

a screen in the in situ device providing a permeable interface between the device and the environment.

23. The device of claim **22** wherein the pump comprises a multi-channel pump.

24. The method of claim **23** wherein at least one channel comprises at least two extraction cartridges in series containing the same sorptive media.

25. The device of claim **22** further comprising a cone or auger attached to one end of the device.

26. The device of claim **22** further comprising a plurality of filters proximate the water intake sized to exclude colloidal particles, where the colloidal particles are larger than transported or dissolved species in the environment where in the device is deployed.

27. The device of claim **22** wherein the screen has an entrance closed by a solid or mesh lid.

28. The device of claim **22** wherein the in situ device further comprises a fluid reservoir in fluid communication with the at least one pump.

29. The method of claim **22** wherein at least one channel comprises at least two cartridges in series containing the same sorptive media.

30. The method of claim **22** wherein pore water taken into the in situ device is fractionated into (i) unfiltered pore water, (ii) filtered pore water, and (iii) ultra-filtered, colloid-depleted pore water.

31. The method of claim **22** further comprising selected extraction resins arranged in parallel to extract contaminant groups including ionic, non-ionic and differing hydrophobic properties.

32. The method of claim **22** wherein the screen is a mesh sleeve.

33. A method for enabling the determination of kinetic rates within a fluid of interest comprising:

directing fluid flow exiting a test bed to a multi-port switching valve;

controlling the multi-port switching valve to switch the fluid to a plurality of channels;

connecting each of the plurality of channels to at least one in-flow extraction cartridge;

concentrating analytes of interest from the fluid flow;

capturing the analytes of interest on at least one extraction medium; and

determining rates by (i) sequentially channeling the fluid through the each of the plurality of channels for a preselected time duration, (ii) retrieving the charged extraction cartridges, (iii) analyzing the extraction cartridges, and computing the kinetic rate of interest.

34. The method of claim **33** wherein analytes are trapped on the extraction media and the fluid, depleted of the analytes of interest, is emptied into the environment, a temporary holding bladder, or individual effluent bags.

35. The method of claim **33** wherein kinetic rate of interest comprises the slope of a straight line and wherein data analysis allows for the determination of reaction orders and rate coefficients.

36. The method of claim **33** wherein the at least one extraction cartridge contains at least one extraction medium.

37. The method of claim **33** further comprising (i) preserving of labile analytes of interest on extraction media for stabilization, (ii) determining kinetic rates of interest, and doing so (iii) without requiring retrieval and analysis of the fluid flow subsamples.

38. A system for enabling the determination of kinetic rates within a fluid of interest comprising:

a conduit for directing fluid flow exiting a test bed to a multi-port switching valve;

a controller coupled to the multi-port switching valve to control switching the fluid to each of a plurality of channels for a preselected time duration;

wherein each of the plurality of channels is coupled to at least one in-flow extraction cartridge having at least one extraction medium for concentrating analytes of interest from the fluid flow to capture the analytes of interest on the at least one extraction medium; and

a processor for determining rates by (i) sequentially channeling the fluid through the extraction flow paths, (ii) retrieving the charged extraction cartridges, (iii) analyzing the extraction cartridges, and (iv) computing the kinetic rate of interest.

39. The system of claim **38** wherein analytes are trapped on the extraction media and the fluid, depleted of the analytes of

interest, is emptied into the environment, a temporary holding bladder, or individual effluent bags.

40. The system of claim **38** wherein the kinetic rate of interest comprises the slope of a straight line using a suitable display scale.

41. The system of claim **38** wherein the at least one extraction medium comprises a plurality of extraction media that can be arranged in parallel or in sequence.

42. The system of claim **38** further comprising preserving of labile analytes of interest on extraction media for stabilization, determination of kinetic rates of interest (ii), and does so (iii) without requiring retrieval and analysis of the fluid flow subsamples.

* * * * *

Appendix E: SPE and IC Methods for Perchlorate

E.1 SPE Method

Solid Phase Extraction Product:	Strata X-AW Weak Anion Exchange Polymer, (33 µm) 500 mg/3 mL Part No. 8B-S038-HBJ
Reagents:	Water, 18 MΩ·cm (ultrapure) 0.01 M Sodium Hydroxide solution Methanol, reagent-grade Hexane, MS-grade

SPE Method:

1. Condition cartridge with 5 mL neat methanol by gravity feed without allowing the resin bed to run dry.
2. Rinse with 10 mL ultrapure water by gravity feed, retaining full volume of water in cartridge.
3. Cap cartridges and refrigerate until installation in sampler.
4. Uncap and install cartridges in sampler, with 3 cartridges in series per channel.
5. Load 15 mL groundwater at up 50 µL/min.
6. Uninstall cartridges from sampler; cap and refrigerate until analysis.
7. Uncap and dry under vacuum.
8. Rinse and wet cartridge with 5 mL neat methanol
9. Elute twice with 10 mL 0.01-M sodium hydroxide solution under vacuum at 1 mL/min.
10. Centrifuge samples at 4000 rpm for 15 min to settle any particles.

E.2 IC Method

This method is described in detail by EPA Method 314.0, "Determination of Perchlorate in Drinking Water Using Ion Chromatography."

E.3 Supporting Data

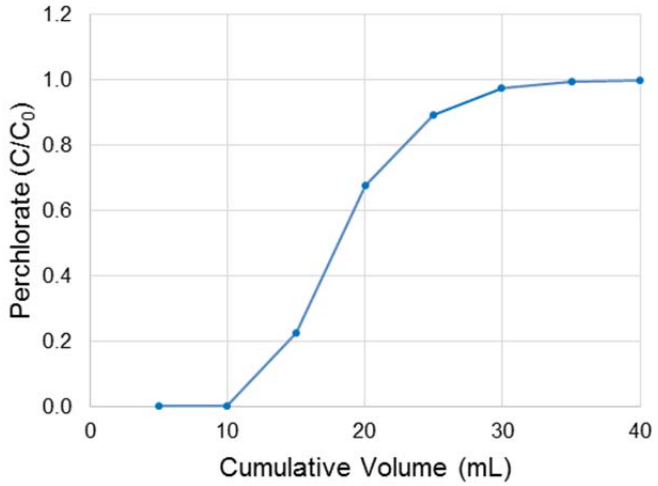

Figure E1. Breakthrough curve for a solution of 50 µg/L perchlorate in deionized water on 500-mg weak anion exchange cartridges.

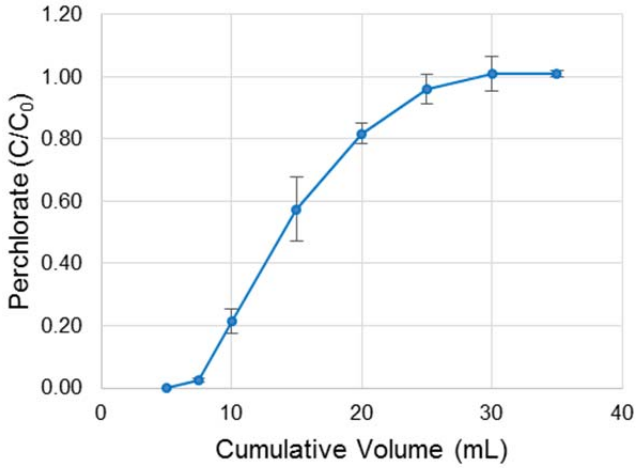

Figure E2. Breakthrough curve for 4-µg/L perchlorate-contaminated groundwater solution on 500-mg weak anion exchange cartridges. Presence of other salts saturates the resin and reduces capacity for perchlorate.

Table E1. Anion concentrations in groundwater used for breakthrough study.

Anion	Concentration	+/-
Chloride	210 mg/L	4 mg/L
Sulfate	45 mg/L	1 mg/L
Nitrate	7.9 mg/L	0.3 mg/L

Appendix F: SPE and GC-MS Methods for Fuel Components

F.1 SPE Method

Solid Phase Extraction Product:	Strata SDB-L Styrene Divinylbenzene Polymer, (100 µm, 260A) 25 mg/1 mL Part No. 8B-S014-CAK
Reagents:	Water, 18 MΩ·cm (ultrapure) Methanol, reagent-grade Hexane, MS-grade

SPE Method:

11. Condition cartridge with 8 mL neat methanol by gravity feed without allowing the resin bed to run dry.
12. Rinse with 1 mL ultrapure water by gravity feed and fill the syringe with 1 mL ultrapure water.
13. Cap cartridges and refrigerate until installation in sampler.
14. Uncap and install cartridges in sampler.
15. Load 200 mL groundwater at up to 1 mL/min.
16. Uninstall cartridges from sampler; cap and refrigerate until analysis.
17. Uncap and dry under gentle vacuum for no more than five minutes.
18. Elute with 2 mL neat hexane at 1 mL/min.

Recovery:

Cartridges were manually loaded with 4 mL groundwater spiked to 8.9 µg/L naphthalene, manually eluted with a vacuum manifold, and the eluate analyzed by GC-MS. Recovery was observed to be 70% (±2%).

F.2 GC-MS Method

GC Parameters:	Column:	DB-5MS (30-m x 0.250-mm x 25-µm)
	Carrier Gas:	Helium, 1.2 mL/min
	Inlet:	280 °C Inject 0.5 µL in splitless mode
	Oven Program:	Hold 50 °C for 3 min Increase 2 °C/min to 66 °C Increase 10 °C/min to 160 °C Increase 40 °C/min to 300 °C Hold 300 °C for 6 min
	MS Program:	230 °C source temperature -70 eV ionization energy 100 ms dwell time on ions 128 (naphthalene), 120 and 105 (isopropylbenzene), and 109 and 91 (ethylbenzene) in Single Ion Monitoring

Appendix G: SPE and Quantification Methods for Chromate

G.1 SPE Method

Solid Phase Extraction Product: ResinTech SIR-100-HP
1.0g/3 mL
Custom Packaging by Applied Separations

Reagents: Water, 18 MΩ·cm (ultrapure)
Sodium Chloride Solution, 10% by weight in Water

SPE Method:

1. Condition cartridge with 10 mL sodium chloride solution at 1 mL/min. Do not dry; retain solution in cartridge.
2. Cap cartridges and refrigerate until installation in sampler.
3. Uncap and install cartridges in sampler.
4. Load 400 mL groundwater at 0.5 mL/min.
5. Uninstall cartridges from sampler; cap and refrigerate until analysis.
6. Uncap elute twice with 50 mL sodium chloride solution.

Recovery:

Cartridges were manually loaded with 400 mL of contaminated groundwater containing 3.2 mg/L chromate and eluted twice with 50 mL sodium chloride solution (10% NaCl by weight). Recovery was observed to be 84% after analysis by colorimetric method.

G.2 Colorimetric Method for Chromate

This is an abbreviated version of the method described in detail by EPA Method 7196A, "Chromium, Hexavalent (Colorimetric)."

Reagents: Diphenylcarbazide Solution, 5 g/L in Acetone
Sulfuric Acid Solution, 10% v/v in Water

1. Aliquot 10 mL of the aqueous solution to be quantified.
2. Adjust pH to 2 with sulfuric acid solution.
3. Add 210 uL diphenylcarbazide solution.
4. Allow time for color to develop.
5. Measure absorbance at 540 nm with spectrophotometer.

G.3 Total Chrome by ICP-AES

This method is described in detail in EPA Method 200.7, "Determination of Metals and Trace Elements in Water and Wastes by Inductively Coupled Plasma-Atomic Emission Spectrometry."

G.3 Recovery Data.

Table G.1. Summary of recovery results for chromate on SIR-100-HP resin.

Resin Mass	Matrix and Volume	Matrix Chromate Concentration	Observed Recovery
1.0 g	Groundwater (400 mL)	4 mg/L	84 %
500 mg	Deionized Water (50 mL)	25 g/L	96 %

G.4 Breakthrough Data.

Fifty-milliliter groundwater samples (Table G.2) were extracted sequentially with a 1.0-g SIR-100-HP SPE cartridge and the effluent analyzed for breakthrough. The breakthrough chromate concentration (Figure G.1) never exceeded 1% of the influent concentration, even after processing 1000 mL of 50 mg/L chromate solution in deionized water. Similar results were noted when groundwater with less than 5 mg/L chromate was extracted.

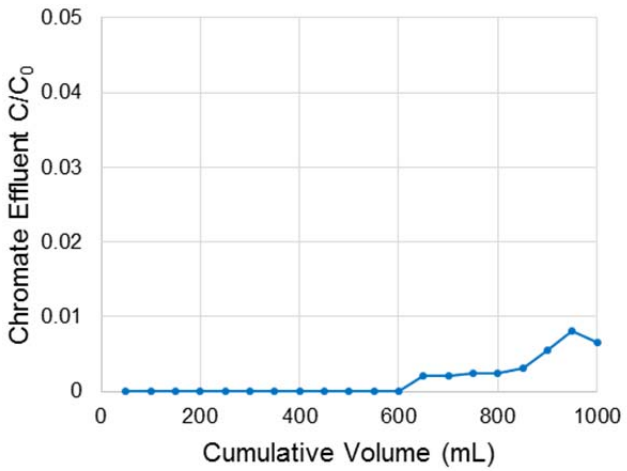

Figure G.1. Effluent concentration of chromate after strong base anion extraction in 1.0 g SPE cartridges.

Table G.2. Anion concentrations in groundwater used for method development.

Analyte	Concentration	Method	Date Measured
Chloride	21 mg/L	EPA 300.0	November 2014
Sulfate	32 mg/L	EPA 300.0	November 2014
Nitrate	3.2 mg/L	EPA 300.0	November 2014
Hexavalent Chromium	1.2 mg/L	SM 3500 CR D	November 2014

Appendix H: SPE and Quantification Method for Suite of Endocrine Disruptors

H.1 SPE Method

Solid Phase Extraction Product:	Strata C18-E Polymer, 500 mg/3 mL
Reagents:	Water, 18 MΩ·cm (ultrapure) Methanol, MS-grade

SPE Method:

1. Condition cartridge with 10 mL methanol.
2. Rinse with 10 mL ultrapure water.
3. Cap cartridges and refrigerate until installation in sampler.
4. Uncap and install cartridges in sampler.
5. Load up to 1000 mL water at 1 mL/min.
6. Uninstall cartridges from sampler; cap and refrigerate until analysis.
7. Rinse with 10 mL ultrapure water.
8. Elute with 5 mL methanol at 1 mL/min.

H.2 LC-MS/MS Method

LC Parameters:	Column:	Waters X-Bridge 4.6 × 150 mm, 3.5 µm C8
	Guard Column:	Waters X-Bridge 4.6 × 150 mm, 3.5 µm C8
	Mobile Phases:	LC-MS-Grade Water LC-MS-Grade Methanol
	Inlet:	Inject 100 µL of methanolic samples diluted 1:1 with MS-grade water.
	Solvent Gradient:	Start with 60% methanol Methanol to 90% over 7 min Hold for 2 min Methanol returns to 60% over 1 min Hold for 3 min
MS/MS Parameters:	Curtain Gas:	25 psi N_2
	Gas 1:	70 psi N_2
	Gas 2	50 psi N_2
	IS:	-4500 eV
	Temperature:	500 ºC
	EP:	-10 eV
	CAD gas:	12 psi N_2

Table H.1. Compounds Selected for Analysis by LC-MS/MS and the MS/MS Parameters Used.

Compound	CAS No.	Precursor Ion	Secondary Ion	DP (V)	EP (V)	CE (V)	CXP (V)
BPA	80-05-7	226.9	133.0	-135	-10	-38	-11
$^{13}C_{12}$ BPA	-	239.0	138.7	-115	-10	-30	-5
Fipronil	120068-37-3	435.0	329.9	-70	-10	-24	-5
		435.0	250.0	-70	-10	-38	-3
MUF	90-33-5	174.9	132.8	-75	-10	-32	-5
Paraben, methyl-	99-76-3	150.9	92.0	-60	-10	-30	-5
Paraben, ethyl-	120-47-8	164.9	92.1	-55	-10	-30	-15
Paraben, propyl-	94-14-3	179.1	92.1	-55	-10	-30	-13
Paraben, butyl-	94-18-8	192.9	92.1	-55	-10	-38	-1
Paraben, benzyl-	94-18-8	227.0	92.0	-65	-10	-36	-1
		227.0	136.1	-65	-10	-22	-5
TBBPA	79-94-7	542.8	78.9	-95	-10	-98	-13
$^{13}C_{12}$ TBBPA	-	554.9	78.9	-110	-10	-96	-11
TCC	101-20-2	312.9	159.9	-80	-10	-18	-9
$^{13}C_{13}$ TCC	-	326.0	166.0	-80	-10	-18	-9
2'-OH-TCC	63348-26-5	328.9	167.9	-65	-10	-18	-9
3'-OH-TCC	63348-28-7	328.9	167.9	-65	-10	-18	-9
3'-Cl-TCC	4300-43-0	346.9	159.9	-80	-10	-22	-11
TCS	3380-34-5	288.8	35.0	-60	-10	-34	-3
$^{13}C_{12}$ TCS	-	301.0	35.0	-60	-10	-34	-3

Notes. DP is declustering potential, EP is entrance potential, CE is collision energy, and CXP is collision cell exit potential. BPA is bisphenol A, MUF is 4-methylumbelliferone, TBBPA is tetrabromobisphenol A, TCC is triclocarban, and TCS is triclosan.

Table H2. Limits of Detection (LOD) and Limits of Quantification (LOQ) Observed.

Compound	LOD (ng/L)	LOQ (ng/L)
BPA	10	33
Fipronil	2	8
Paraben, methyl-	3	9
Paraben, ethyl-	2	8
Paraben, propyl-	2	5
Paraben, butyl-	3	10
Paraben, benzyl-	5	18
TBBPA	8	28
TCC	3	9
2'-OH-TCC	9	31
3'-OH-TCC	10	32
3'-Cl-TCC	4	15
TCS	55	182

Notes. BPA is bisphenol A, TBBPA is tetrabromobisphenol A, TCC is triclocarban, and TCS is triclosan.

Appendix I: SPE and LC-MS/MS Methods for *N*-Nitrosamines

I.1 Compound Table

Table I.1. Selected *N*-nitrosamines screened for analysis by SPE and LC-MS/MS.

Chemical Name	CAS No.	Typical Uses	Suitability for IS2
N-nitrosodimethylamine (NDMA)	62-75-9	None – disinfection byproduct (DBP)	Poor
N-nitrosomethylethylamine (NMEA)	10595-95-6	None (DBP)	Poor
N-nitrosodiethylamine (NDEA)	55-18-5	None (DBP)	Poor
N-nitrosodi-n-propylamine (NDPA)	621-64-7	None (DBP)	Good
N-nitrosodibutylamine (NDBA)	924-16-3	None (DBP)	Good
N-nitrosopyrrolidine (NPYR)	930-55-2	None (DBP)	Marginal
N-nitrosopiperidine (NPIP)	100-75-4	None (DBP)	Marginal
N-nitrosodiphenylamine (NDPhA)	86-30-6	Rubber manufacturing and DBP	Good

I.2 SPE Method

Solid Phase Extraction Product: Oasis HLB 6 cc Vac Cartridge
200 mg Sorbent per Cartridge
30 µm Particle Size
Prod No.WAT106202

Reagents: Water, 18 MΩ·cm (ultrapure)
Methanol, MS-grade
Dichloromethane, MS-grade
Acetonitrile, MS-grade

SPE Method:

1. Condition cartridge with 5 mL methanol by gravity feed without allowing the resin bed to run dry.
2. Rinse with 10 mL ultrapure water by gravity feed, retaining full volume of water in cartridge.
3. Cap cartridges and refrigerate until installation in sampler.
4. Uncap and install cartridges in sampler, with 3 cartridges in series per channel.
5. Load 15-30 mL groundwater at up to 50 µL/min.

6. Uninstall cartridges from sampler; cap and refrigerate until analysis.
7. Uncap and dry under vacuum.
8. Rinse and wet cartridge with 5 mL ultrapure water
9. Elute once with 10 mL dichloromethane solution under vacuum at 1 mL/min.
10. Elute once with 10 mL acetonitrile solution under vacuum at 1 mL/min.
11. Combine eluents from step 9 and 10, concentrate under N_2 gas and reconstitute in methanol.

I.3 LC-MS/MS Method

MS/MS parameter	
Ion source	Positive electrospray ionization
Collision Gas	6
Curtain Gas	50
Ion source Gas 1	80
Ion Source Gas 2	70
Ion Spray Voltage	4500 V
Source Gas Temperature	700 ^{o}C

Analyte	**Parent ion (m/z)**	**Product ion (m/z)**	**Declustering potential (V)**	**Exit Potential (V)**	**Collision Energy (V)**	**Collision Cell Exit Potential (V)**	**Retention Time (min)**
NDMA	75	43	51	10	25	2	5.34
NMEA	89	61	51	10	17	10	5.86
NDEA	103	75	51	10	17	12	6.65
NDPA[a]	131	89	51	10	17	8	8.82
	131	43					
NDBA[a]	159	103	56	10	17	8	11.18
	159	57					
NPYR	101	55	61	10	23	8	5.64
NPIP[a]	115	69	61	10	23	12	6.73
	115	41					
NDPhA[a]	199	169	56	10	17	8	11.16
	199	168					
			Deuterated isotopes				
NDMA-d_6	81	46	51	10	25	2	5.35
NDPA-d_{14}	145	50	51	10	17	8	8.76
NPIP-d_{10}	125	78	61	10	23	12	6.70
NDPhA-d_6	205	175	56	10	17	8	11.11

[a]Two different transitions were used for these analytes for quantification and identification