FINAL REPORT

Integrated Ion Exchange Regeneration Process for Drinking Water

ESTCP Project ER-0545

APRIL 2010

Christopher Lutes
Trent Henderson
Carl Singer
Daniel Garcia
ARCADIS

Nicholas Pollack
C. Chiang
Calgon Carbon Corporation

Baohua Gu
Oak Ridge National Laboratory

Distribution Statement A: Approved for Public Release,
Distribution is Unlimited

Environmental Security Technology
Certification Program

Table of Contents

List of Acronyms **xii**

1. INTRODUCTION - **1**

1.1 BACKGROUND 1

1.2 OBJECTIVE OF THE DEMONSTRATION 5

1.3 REGULATORY DRIVERS 6

2. TECHNOLOGY **9**

2.1 TECHNOLOGY DESCRIPTION 9

2.2 TECHNOLOGY DEVELOPMENT 10

2.2.1 Development of Perchlorate-Selective IX Resins 10

2.2.2 Ferric Chloride-HCl Regeneration of IX Resins 12

2.2.3 Perchlorate Destruction and Regenerant Recycling 14

2.3 ADVANTAGES AND LIMITATIONS OF THE TECHNOLOGY 15

3. PERFORMANCE OBJECTIVES **19**

3.1 QUANTITATIVE PERFORMANCE OBJECTIVES 19

3.1.1 Meet California DHS Notification Level for Perchlorate 21

3.1.2 Efficacy of Regenerated Resin as compared to Virgin Resin 21

3.1.3 Meet California DHS Notification Levels or MCLs for Nitrate, Title 22 Metals, and Nitrosamines 21

3.1.4 Perchlorate Destruction 21

3.1.5 Accumulation of Uranium 22

3.2 QUALITATIVE PERFORMANCE OBJECTIVES 22

3.2.1 Reduced Treatment Cost 22

3.2.2 Scalability 22

3.2.3 Integration 23

3.2.4 Time to Saturation 23

3.2.5 Rinse Volume Requirement 23

3.2.6 Rinse Water Treatment 24

3.2.7 Regeneration Process Efficiency 24

3.2.8 Purge Rate 24

3.2.9 Optimum Destruction Conditions 24

3.2.10 Operation and Maintenance 25

3.2.11 Regenerant Readjustment 25

4. SITE DESCRIPTION 26

4.1 SITE LOCATION AND HISTORY 26

4.2 SITE GEOLOGY, HYDROGEOLOGY AND CONTAMINANT DISTRIBUTION 28

5. TEST DESIGN 33

5.1 CONCEPTUAL EXPERIMENTAL DESIGN 33

5.1.1 Experimental Design Overview 33

5.1.2 Experimental Design – IX Unit Process 40

5.1.2.1 Literature Review Regarding Critical Design and Operating Factors for IX 40

5.1.2.2 FWC Demonstration Experimental Design – IX Unit Process 40

5.1.3 Experimental Design – Regeneration Unit Process 45

5.1.3.1 Literature Review Regarding Critical Design and Operating Factors for Ferric Chloride Regeneration 45

5.1.3.2 FWC Demonstration Experimental Design – Ferric Chloride Regeneration 46

5.1.4 Experimental Design – Destruction Unit Process 48

5.1.4.1 Literature Review regarding Critical Design and Operating Factors for Perchlorate Destruction Unit Process 48

5.1.4.2 FWC Demonstration Experimental Design – Perchlorate Destruction Unit Process 49

5.2 BASELINE CHARACTERIZATION 49

5.3 TREATABILITY OR LABORATORY STUDY RESULTS 50

5.3.1 IX Simulated Distribution System Analysis 50

5.4 DESIGN AND LAYOUT OF TECHNOLOGY COMPONENTS 51
5.4.1 Overview of Design and Layout 52
5.4.2 FWC Demonstration Experimental Design – Ion Exchange Unit Process 52
5.5 FIELD TESTING 55
5.5.1 Installation and Startup – FWC Operations 55
5.5.2 IX System Operations - FWC 56
5.5.3 Regeneration Operations – Pittsburgh 58
5.5.4 Destruction Unit Operations – Pittsburgh 59
5.5.5 Demobilization - FWC 65
5.5.6 Schedule 66
5.6 SAMPLING METHODS 66
5.6.1 Data Collection 66
5.6.2 Experimental Controls 73
5.6.2.1 Experimental Controls – IX 73
5.6.2.2 Experimental Controls – Regeneration 73
5.6.2.3 Experimental Controls – Perchlorate Destruction 74
5.6.3 Analytical/Testing Methods 74
5.6.4 Quality Assurance/Quality Control 75
5.7 SAMPLING RESULTS 75
5.7.1 IX Unit Process Sampling Results 75
5.7.1.1 Perchlorate – IX Unit Process 75
5.7.1.2 Nitrate – IX Unit Process 77
5.7.1.3 Sulfate- IX Unit Process 78
5.7.1.4 pH – IX Unit Process 79
5.7.1.5 TDS – IX Unit Process 79
5.7.1.6 Total Organic Carbon (TOC) – IX Unit Process 80
5.7.1.7 Chloride – IX Unit Process 80
5.7.1.8 Fluoride – IX Unit Process 80
5.7.1.9 Title 22 Metals and Major Cations – IX Unit Process 81
5.7.1.10 Dissolved Iron – IX Unit Process 86

5.7.1.11 Total Iron – IX Unit Process 86
5.7.1.12 Dissolved Manganese – IX Unit Process 86
5.7.1.13 Total Manganese – IX Unit Process 86
5.7.1.14 Dissolved Uranium – IX Unit Process 86
5.7.1.15 Total Uranium – IX Unit Process 87
5.7.1.16 Total Arsenic – IX Unit Process 87
5.7.1.17 Gross Alpha – IX Unit Process 87
5.7.1.18 Radon – IX Unit Process 88
5.7.1.19 VOCs – IX Unit Process 89
5.7.1.20 SVOCs and Pesticides – IX Unit Process 89
5.7.1.21 Nitrosamine Monitoring – IX Unit Process 90
5.7.2 Regeneration Unit Process Sampling Results 94
5.7.2.1 Perchlorate - Regeneration Process 94
5.7.2.1.1 Perchlorate Elution during Initial Backwashes and rinses 94
5.7.2.1.2 Perchlorate Elution during Tetrachloroferrate Regeneration 96
5.7.2.1.3 Perchlorate Elution in Post Regeneration Rinses 97
5.7.2.2 Nitrate - Regeneration Process 99
5.7.2.2.1 Nitrate Elution during Resin Backwash and Rinse 99
5.7.2.2.2 Nitrate elution during resin Regeneration 100
5.7.2.2.3 Nitrate Elution in Post Regeneration Rinses 102
5.7.2.3 Sulfate – Regeneration Process 103
5.7.2.3.1 Sulfate Elution during Backwash and Rinse 103
5.7.2.3.2 Sulfate Elution during Regeneration 104
5.7.2.3.3 Sulfate Elution during Post Regeneration Rinses 105
5.7.2.4 Chloride – Regeneration Process 106
5.7.2.5 Uranium – Regeneration Process 106
5.7.2.6 Total Iron – Regeneration Process 109
5.7.2.6.1 Total Iron – Tetrachloroferrate Regeneration 109
5.7.2.6.2 Total Iron – Rinse Steps 110
5.7.2.7 Acidity – Regeneration Process 113

5.7.2.8 Nitrosamines – Regeneration Process 115
5.7.2.9 VOCs 118
5.7.2.10 SVOCs and N/P Pesticides 119
5.7.3 Destruction Unit Process Sampling Results 119
5.7.3.1 Perchlorate - Destruction 119
5.7.3.2 Nitrate - Destruction 123
5.7.3.3 Sulfate- destruction unit process 125
5.7.3.4 NDMA, NDEA, and NDPA in destruction unit process 127
5.7.3.5 pH – destruction reactor 129
5.7.3.6 TDS 129
5.7.3.7 TOC 130
5.7.3.8 Chloride 130
5.7.3.9 Fluoride 130
5.7.3.10 Title 22 Metals and Major Cations 130
5.7.3.11 Dissolved Fe 132
5.7.3.12 Dissolved Mn 132
5.7.3.13 Gross Alpha 135
5.7.3.14 Dissolved U 135
5.7.3.15 Total Fe 135
5.7.3.16 Total Mn 136
5.7.3.17 Total As 136
5.7.3.18 Total U 136
5.7.3.19 VOCs 136
5.7.3.20 SVOCs and N/P Pesticides 139
5.7.4 Simulated Distribution System (SDS) Sampling Results 139
5.7.4.1 Free Chlorine 140
5.7.4.2 Total Organic Halides 141
5.7.4.3 Haloacetic Acids 141
5.7.4.4 Trihalomethane 141
5.7.4.5 NDMA, NDEA, and NDPA 141
6. PERFORMANCE ASSESSMENT 143
6.1 MEET CALIFORNIA DHS NOTIFICATION LEVEL FOR PERCHLORATE 143

6.2 EFFICACY OF REGENERATED RESIN AS COMPARED TO VIRGIN RESIN 144

6.3 MEET CALIFORNIA DHS NOTIFICATION LEVELS OR MCLS FOR NITRATE, TITLE 22 METALS, AND NITROSAMINES 145

6.3.1 Nitrate 145

6.3.2 Title 22 Metals 146

6.3.3 Nitrosamines 146

6.4 PERCHLORATE DESTRUCTION 148

6.5 ACCUMULATION OF URANIUM 149

6.6 REDUCED TREATMENT COST 151

6.7 SCALABILITY 151

6.8 INTEGRATION 151

6.9 TIME TO SATURATION 153

6.10 RINSE VOLUME REFINEMENT 153

6.10.1 Dilute Acid Wash 153

6.10.2 DI Wash 153

6.10.3 Dilute Acid Rinse 154

6.10.4 Water Rinses and Non-toxic Inorganic Rinses 154

6.11 RINSE WATER TREATMENT 154

6.12 REGENERATION PROCESS EFFICIENCY 155

6.13 PURGE RATE 157

6.14 OPTIMUM PERCHLORATE DESTRUCTION CONDITIONS 157

6.15 OPERATION & MAINTENANCE 158

6.16 REGENERANT READJUSTMENT 158

7. COST ASSESSMENT 159

7.1 COST MODEL 159

7.1.1 System Design 159

7.1.2 System Installation 161

7.1.3 On-Site Operations and Maintenance 162

7.1.4 Regeneration of Resin 162

7.1.5 Destruction/Waste Disposal 162

7.2 COST DRIVERS 163

7.3 COST MODEL 164

8. IMPLEMENTATION ISSUES 169

8.1 APPLICABLE REGULATIONS 169

8.2 END USER CONCERNS AND DECISION MAKING FACTORS 169

8.3 PROCUREMENT ISSUES 171

9. REFERENCES 172

Tables

Table 1-1. IX Resin Types, Functional Groups, Capacity, and Treatment Costs 3

Table 2-1. Comparison of Advantages and Disadvantages of Using Different IX and Regeneration Techniques 16

Table 3-1. Performance Objectives 19

Table 4-1. Production Well Groundwater Chemistry (X/Y Indicates Multiple Measurements) 28

Table 5-1. Demonstration: Analytical Matrix – As Originally Planned 41

Table 5-2. Estimated First Order Rate Constants (*k*) for Reduction of Perchlorate at Low and High Fe (II) Concentrations in $FeCl_3$-HCl Regenerant Solution at Varying Temperatures[a] (Reprinted from Gu 2003a) 48

Table 5-3. Degradation of Perchlorate in a Flow-Through Reactor at Various Flow Rates, Temperatures, and Pressures[a] (Reprinted from Gu 2003a) 48

Table 5-4. Influent Perchlorate Concentration Statistical Analysis 50

Table 5-5. Simulated Distribution System Test Matrix (Performed on Two Occasions) 51

Table 5-6. Downtime Occurrences of the Demonstration System 57

Table 5-7. Resin Regeneration Steps 60

Table 5-8. Total Number and Types of Samples Collected 67

Table 5-9. Analytical Methods for Sample Analysis 69

Table 5-10. Engineering/Economic Parameters for IX Unit Process 70

Table 5-11. Engineering/Economic Parameters for Regeneration Unit Process 70

Table 5-12. Engineering/Economic Parameters for Destruction Unit Process 72

Table 5-13. Validation of Perchlorate Measurements 77

Table 5-14. Summary of Detectable Wellhead Treatment Unit TOC Concentrations 80

Table 5-15. Influent Title 22 Metals at FWC Wellhead IX Treatment Unit 82

Table 5-16. Effluent Title 22 Metals at FWC Wellhead IX Treatment Unit 83

Table 5-17. Major Cations at the FWC Wellhead IX Treatment Unit 84

Table 5-18. Accumulative Metals (As, Fe, Mn, and U) at FWC Wellhead IX Treatment Unit 85

Table 5-19. Radiation Related Analytes at FWC Wellhead IX Treatment Unit 88

Table 5-20. Effluent VOCs In the Only Two Samples that Had Detections, Compared to Regulatory and Risk Screening Levels (Detected Values Bold, Exceedances of MCLs Shaded Red) 89

Table 5-21. Nitrosamine Concentrations during Back-flush at FWC Wellhead IX Treatment Unit Prior to Startup. 91

Table 5-22. Influent Nitrosamine Concentrations at FWC Wellhead IX Treatment Unit 92

Table 5-23. Effluent Nitrosamine Concentrations at FWC Wellhead IX Treatment Unit 93

Table 5-24. Nitrosamines Measured During Regeneration Processes 117

Table 5-25. Summary of Reactants from Parametric Destruction Tests during First Destruction Cycle (flow rates 20-23 mL/min green shaded, 40-45 mL/min blue shaded) 121

Table 5-26. Summary of Reactants from Production Destruction Runs during Second Destruction Cycle 121

Table 5-27. Summary of Reactants from Parametric Destruction Tests during Second Destruction Cycle (flow rates 20-23 mL/min green shaded, 40-45 mL/min blue shaded) 123

Table 5-28. Summary of Major Conserved Analytes from Parametric Destruction Tests during First Destruction Cycle 125

Table 5-29. Summary of Major Conserved Analytes from Production Destruction Runs during Second Destruction Cycle 126

Table 5-30. Summary of Major Conserved Analytes from Parametric Destruction Tests during Second Destruction Cycle 127

Table 5-31. Nitrosamines Measured During Parametric Destruction Tests 128

Table 5-32. General Water Quality Parameters Measured during Parametric Destruction Tests 131

Table 5-33. Title 22 Metals from Parametric Destruction Tests 133

Table 5-34. Accumulative Metals (As, Fe, Mn, and U) from Parametric Destruction Tests 134

Table 5-35. Gross Alpha from Destruction Unit Operations 135

Table 5-36. VOCs from Parametric Destruction Tests 138

Table 5-37. SVOCs from Parametric Destruction Tests 139

Table 5-38. Free Chlorine and Halogenated Compounds from SDS Study 140

Table 5-39. Nitrosamines from SDS Study 142

Table 6-1. Perchlorate Breakthrough at FWC Wellhead IX Treatment Unit 143

Table 6-2. Perchlorate Loading at FWC Wellhead IX Treatment Unit 145

Table 6-3. Summary of Effluent Title 22 Metals Samples at FWC Wellhead IX Treatment Unit 147

Table 6-4. Summary of Perchlorate Destruction Efficiency in Both Sets of Parametric Tests 149

Table 6-5. Alkali Demand for Rinse Neutralization 155

Table 7-1: Cost Elements Tracked during IIX Demonstration. (15-gpm scale) 160

Table 7-2: Perchlorate Treatment System Life-Cycle Costs 168

Figures

Figure 2-1. Process Schematic IX at FWC (Backwash Pump Shown was not Installed) 9

Figure 2-2. Small-scale ORNL Perchlorate Treatment Systems were Built and Demonstrated at Edwards Air Force Base (Gu et al., 2005) 11

Figure 2-3. A Flow-through Destruction Reactor 15

Figure 4-1. Site Map, FWC-17B and FWC-17C 27

Figure 4-2. Perchlorate in Groundwater in Chino Basin 29

Figure 4-3. Historical Trends in Nitrate and Perchlorate Concentration in Well FWC-17B 30

Figure 4-4. Historical Trends in Nitrate and Perchlorate Concentration in Well FWC-17C 30

Figure 4-5. Nitrate Concentration for Wells FWC-17B and FWC-17C during 2007 and 2008, Data Provided by FWC 31

Figure 5-1. Diagram of Regeneration, Rinse, and Destruction Systems Showing Sampling Points 36

Figure 5-2. Key for Revised Flow Diagram of Regeneration, Rinse, and Destruction Systems Showing Sampling Points 37

Figure 5-3. Resin Pre-treatment System 38

Figure 5-4. Process Schematic Ion Exchange at FWC 39

Figure 5-5. Process Flow Diagram, IIX Demonstration Project 54

Figure 5-6. Simplified Process Flow Diagram of Regeneration and Destruction 59

Figure 5-7. Destruction Unit with Tantalum Heating and Cooling Coils Component Views 62

Figure 5-8. Destruction Unit with Tantalum Heating and Cooling Coils Integrated System 63

Figure 5-9. Project Operational Gantt Chart 66

Figure 5-10. Influent Perchlorate Concentrations at FWC Wellhead IX Treatment Unit 76

Figure 5-11. Effluent Perchlorate Concentration at FWC Wellhead IX Treatment Unit 77

Figure 5-12. Influent Nitrate Concentration at FWC Wellhead IX Treatment Unit 78

Figure 5-13. pH Changes across FWC Wellhead IX Treatment Unit 79

Figure 5-14. Perchlorate Elution from Dilute Acid Backwash during Regeneration 95

Figure 5-15. Perchlorate Elution during Tetrachloroferrate Regeneration 96

Figure 5-16. Composite Perchlorate during Tetrachloroferrate Regeneration 97

Figure 5-17: Perchlorate Elution during Regeneration Second DI Rinse 98

Figure 5-18: Perchlorate Elution during Regeneration Inorganic Rinse 99

Figure 5-19. Nitrate Elution from Dilute Acid Backwash during Regeneration 100

Figure 5-20. Nitrate Elution during Tetrachloroferrate Regeneration 101

Figure 5-21. Composite Nitrate Elution during Tetrachloroferrate Regeneration 102

Figure 5-22. Sulfate Elution from DiluteAcid Backwash during Regeneration 103

Figure 5-23. Sulfate Elution during Tetrachloroferrate Regeneration 104

Figure 5-24. Composite Sulfate Elution during Tetrachloroferrate Regeneration 105

Figure 5-25. Chloride Elution from Dilute Acid Backwash during Regeneration 107

Figure 5-26. Uranium Elution from Dilute Acid Backwash during First Regeneration Cycle 108

Figure 5-26a: Composite Uranium Elution from Dilute Acid Backwash during Third Regeneration Cycle 109

Figure 5-27. Composite Iron Elution during Tetrachloroferrate Regeneration 110

Figure 5-28: Total Iron Elution from Acid Rinse during Regeneration 111

Figure 5-29: Composite Total Iron Elution from Acid Rinse during Regeneration 111

Figure 5-30 Total Iron Elution from Second DI Rinse during Regeneration 112

Figure 5-31: Total Iron Elution from Nontoxic inorganic Rinse during Regeneration 113

Figure 5-32. Composite Acidity Elution during Tetrachloroferrate Regeneration 114

Figure 5-33. Composite Acidity Elution from the Acid Rinse during Regeneration 115

Figure 5-34: Typical Destruction Reactor Perchlorate Effluent Profile during First Destruction Cycle Parametric Tests (Temperature 169 C, Residence Time 2.8 hours) 120

Figure 5-35: Typical Destruction Reactor Nitrate Effluent Profile during First Destruction Cycle Parametric Tests 124

Figure 6-1: Washout of NDMA from Virgin IX Resin 148

Figure 6-2. Perchlorate Mass Elution during Regeneration 156

Figure 6-3: Perchlorate Destruction Reaction Rate Constant as a Function of Temperature 158

Appendices

Appendix A: Points of Contact

Appendix B: Project QAPP

Appendix C: Detailed Data Tables

Appendix D: Weck Laboratory QA Program (see PDF)

List of Acronyms

AFB	Air Force Base
ARAR	Applicable or Relevant and Appropriate Requirements
ATSDR	Agency for Toxic Substances and Disease Registry
BGS	Below Ground Surface
BV	Bed Volumes
CERCLA	Comprehensive Environmental Response Compensation and Liability Act
CO_2	Carbon Dioxide
COTS	Commercial Off the Shelf
DHS	Department of Health Services
DI	Deionized
DO	Dissolved Oxygen
DoD	Department of Defense
DPH	California Department of Public Health
DTSC	Department of Toxic Substances Control
DWEL	Drinking Water Equivalent Level
EPA	Environmental Protection Agency
ESTCP	Environmental Security Technology Certification Program
FWC	Fontana Water Company
GAC	Granular Activated Carbon
GPD	Gallons per Day
GPH	Gallon per Hour
GPM	Gallons per Minute
HCl	Hydrogen Chloride (Hydrochloric Acid)
HCO_3	Bicarbonate
HRL	Health Reference Level
ID	Identification
IIX	Integrated Ion Exchange; synthesis of IX treatment, regeneration, and contaminant destruction
ISEP	Ion Separator
ITRC	Interstate Technical Regulatory Council
IX	Ion Exchange
L/D	Length to Diameter
MCL	Maximum Contaminant Level
MS	Mass Spectroscopy
NAS	National Academy of Sciences
NCP	National Contingency Plan
ND	Non-Detect
NDBA	N-Nitrosodi-n-butylamine
NDEA	N-Nitrosodi-n-propylamine
NDMA	N-Nitrosodimethylamine

NFESC	Naval Facilities Engineering Services Center
NL	Notification Level
NMEA	N-Nitrosodiethylamine
NMOR	N-Nitrosomorpholine
NO_3	Nitrate
NPDES	National Pollution Discharge Elimination System
NPIP	N-Nitrosopiperidine
NPYR	N-Nitrosopyrrolidine
NSF	National Sanitary Foundation
O&M	Of the Municipal
OEHHA	Office of Environmental Health Hazard Assessment
ORNL	Oak Ridge National Laboratory
PCE	Tetrachloroethene
PHG	Public Health Goal
POTW	Publicly Owned Treatment Works
PRG	Preliminary Remediation Goal
R&D	Research and Development
RfD	Reference Dose
SBA	Strong Base Anion
SCADA	Supervisory Control and Data Acquisition
SDS	Simulated Distribution System
SDWA	Safe Drinking Water Act
SMCL	Set MCL
SVOC	Semi-Volatile Organic Carbon
TBC	To Be Considered
TCE	Trichloroethene
TDS	Total Dissolved Solids
TOC	Total Organic Carbon
U.S.	United States
USEPA	United States Environmental Protection Agency
USGS	United States Geological Survey
VOC	Volatile Organic Carbon

1. INTRODUCTION -

This report describes an evaluation of the synthesis of an ion exchange (IX) process for perchlorate treatment in drinking water, regeneration of spent IX resin for re-use, and destruction of perchlorate in the spent regeneration fluid to create an integrated IX (IIX) regeneration process. The demonstration site was at an operating municipal water treatment plant, Fontana Water Company (FWC), in Fontana, a city located in the Inland Empire region of southern California. The project was conducted by ARCADIS as prime contractor (contract #W912HQ-06-C-004), with Calgon Carbon Corporation (Calgon) and Oak Ridge National Laboratory (ORNL) as partners (hereafter referred to as the Project Team). Funding and oversight were provided by the Environmental Security Technology Certification Program (ESTCP) and the Naval Facilities Engineering Services Center (NFESC). The project was funded under a special congressionally directed program to ESTCP for wellhead perchlorate treatment. This work was contracted through the Corps of Engineers in Alexandria, Virginia, and overseen by the NFESC. The program involved field activities at a municipal water treatment facility and at a Calgon facility. The format of this demonstration plan followed "Final Report Guidance; Environmental Restoration Projects," issued by ESTCP in March 2008.

1.1 BACKGROUND

Perchlorate is an issue in drinking water because of its high solubility and mobility, known effects on thyroid hormone production, and treatment cost. The need for perchlorate treatment is nationwide and especially acute in the southwestern United States (U.S.), including the southern California Inland Empire region. Throughout the U.S., state standards or advisory levels are still evolving and currently range from 1 to 18 micrograms per liter (µg/L). The need for cost-effective treatment is especially pressing in the Inland Empire; a two-county region composed of San Bernardino and Riverside counties, whose population of 3.4 million is larger than those of many states (Mecula, 2003). The Inland Empire is California's fastest growing area and has a rapidly increasing demand for water. The area's perchlorate plume is at least six miles long and impacts four towns' water supplies, resulting in impairment of 61,790 acre-feet per year (76,187,070 cubic meters per year) of potable water.

IX and biological reduction are to date the only technologies that have been successfully and widely commercialized to treat perchlorate in water. IX is the only perchlorate treatment technology fully approved by the California Department of Public Health (DPH) for drinking water treatment applications. Biological reduction of perchlorate using a fluidized bed bioreactor has been conditionally approved by the DPH for drinking water treatment. The following main process options have been developed for perchlorate IX:

- Non-selective, single-use IX followed by resin disposal or incineration
- Non-selective IX followed by resin regeneration using sodium chloride (NaCl) brine (e.g., Calgon Ion Separator (ISEP) System)

- Perchlorate-selective (for nitrate and perchlorate over sulfate and other anions), single-use IX followed by resin disposal or destruction
- Perchlorate-selective (for nitrate and perchlorate over sulfate and other anions) IX followed by resin regeneration using tetrachloroferrate, which is the subject of this demonstration project

Table 1-1 provides information on types of IX resins used in perchlorate treatment. Since free chlorine damages IX resins, IX occurs before chlorination or after a chlorine scavenger such as activated carbon. Currently, commercially available IX approaches, using non-selective resins, single-use resins and those involving regeneration using sodium chloride (NaCl) brines, have three serious drawbacks. First, non-selective anion-exchange resins are inefficient in removing dissolved perchlorate (ClO_4^-) because they also remove other major anions, such as NO_3^-, HCO_3^- and SO_4^{2-} that compete for IX sites. Because the concentrations of these competing anions are generally 3 to 5 orders of magnitude higher than that of ClO_4^- in contaminated water, less than 0.5 percent of the exchange sites in a resin bed are typically utilized for ClO_4^- removal at breakthrough (Brown et al., 2000; Gu et al., 2000a; Tripp and Clifford, 2000). In other words, the resin is significantly underutilized, and > 99.5 percent of the exchange sites contain the competing anions that may not require treatment. The resin thus requires frequent regeneration for reuse, or replacement (single-use resins) because of the limited perchlorate exchange capacity. In addition, the unnecessary exchange of some ions changes the general water chemistry and can potentially cause exceedance of secondary water quality standards (e.g., chloride or nitrate).

Secondly, although nitrate-selective resins are also ClO_4^- selective and have minimal adverse impacts to water quality (Urbansky, 1998; Gu et al., 2002b), the unusually high affinity for ClO_4^- with these resins makes regeneration using conventional NaCl brine extremely difficult and costly (Batista et al., 2000; Brown et al., 2000; Tripp and Clifford, 2000). For example, Tripp and Clifford reported that, even with relatively non-selective resins using counter-flow brine regeneration, a large excess of NaCl is required. With relatively selective anion exchange resins, many bed volumes (BVs) of 12 percent (by weight) NaCl are able to remove only ~6 percent (by weight) of the sorbed ClO_4^- from the resin, and heating of the regenerant solution provided only limited improvement. Lastly, spent anion exchange regeneration brines or single-use resins create additional expense and environmental liability with disposal.

Single-use perchlorate-selective IX is currently the most commonly used perchlorate treatment technology because of the challenges identified above. This technology does not require disposing of spent regenerant solution, which reduces environmental liability. Spent resin is most often incinerated, which results in the destruction of the captured perchlorate-also reducing environmental liability. Finally, perchlorate capacity of newer selective resins has increased significantly, while costs of these newer resins have significantly fallen resulting in more cost-effective perchlorate treatment in recent years.

Biological treatment, such as the fluidized bed bioreactor, can be a cost-effective treatment technology that is particularly suitable for treatment of high concentrations of

ClO_4^- in groundwater. However, the method can be ineffective or very costly for treatment of large plumes with low perchlorate concentrations (i.e., < 100 µg/L ClO_4^-) or in drinking water applications because of the highly reducing environment that is required for biodegradation of ClO_4^- to occur, along with the negative public perception that can accompany biological treatment. The greatest challenge is the requirement for large amounts of electron donors (carbon source) and occasionally additional electron acceptors may be required to sustain enough biomass and to create continuous reducing conditions at high flow rates. Many groundwater constituents such as dissolved oxygen (DO) and NO_3^- are also known to be preferred electron acceptors in biological reduction, and they must be reduced before or during the reduction of ClO_4^-. Adding excess electron donor, if not carefully managed, can create sulfate reducing conditions, which may result in taste and odor problems. Furthermore, post-treatment is required for drinking water treatment because of concerns regarding the potential presence of pathogens and the need to re-oxygenate the treated water, (biodegradation as a treatment mechanism has rarely been accepted for drinking water by the regulatory community in the U.S.). (We note however that biological processes no doubt occur in some U.S. drinking water systems, e.g., biofilm growth in distribution systems and biologically active filtration media.) Biological treatment technologies are more commonly used in drinking water applications in Europe.

Table 1-1. IX Resin Types, Functional Groups, Capacity, and Treatment Costs[1]

Generic Resin Name	Functional Group	Capacity (BVs)	Treatment Cost	
			($/Acre-foot)	($/1,000-gal)
Existing Commercial Technology: NaCl Regenerable via Ion Separation Exchange Process (ISEP) Technology				
Strong Base Anion (SBA) Acrylic (ISEP)	Trimethyl	300	$140	$0.43
SBA Acrylic (ISEP+)	Trimethyl	300	$130	$0.40
Existing Commercial Technology: Single Use				
SBA Macroporous	Trimethyl	16,000	$299	$0.92
Nitrate Selective	Triethyl	52,000	$168	$0.52
Perchlorate Selective	Triethyl/Trihexyl	100,000	$142	$0.44
Innovative Technology: $FeCl_3$/HCl Regenerable Resins				
Nitrate Selective w/ ORNL Regeneration and Destruction	Triethyl	52,000	$101	$0.31
Perchlorate-Selective w/ ORNL Regeneration and Destruction	Triethyl/Trihexyl	100,000	$72	$0.22

1 Based on Calgon pricing tool.

ARCADIS, Calgon, and ORNL demonstrated an IIX process for perchlorate in drinking water that integrates perchlorate removal via IX resin, regeneration and re-use of the resin, and destruction of the recovered perchlorate in the regenerant solution. This integrated process uses a resin regeneration and a perchlorate destruction cycle that reconstitutes the regenerant solution. The work built upon three (3) ORNL-developed, award-winning (*R&D 100 award, 2004*) processes: (1) highly-selective bi-functional resin (a macroporous polystyrene divinylbenzene SBA with two (2) quaternary ammonium functional groups), (2) novel ferric chloride-hydrochloric acid ($FeCl_3$-HCl) resin regeneration, and (3) perchlorate destruction process for the regenerant solution and subsequent regenerant recycling. Thus, both the resin and the regenerant solution can be reused. This process dramatically reduces production of secondary waste streams, reduces the raw materials requirement for single-use replacement resin, and, at full-scale, is expected to result in a cost savings as compared with conventional single-use IX resins. The treatment system used here was customized specifically for drinking water treatment.

This IIX technology, subject of this report, addresses weaknesses associated with conventional IX systems, including the following:

- **Generation of Large Volume of Residual Waste Streams:** Either the entire resin volume or a substantial volume (typically 1 to 5 percent of the total treated water volume) of perchlorate-contaminated brine must be disposed of as a waste stream. Spent ("used" or "exhausted") resin is typically disposed of off-site by incineration or fuel blending. Some, but not all system owners/operators also consider landfilling as a disposal option for resins. Regenerant brine is either discharged to an approved waste discharge pipeline, disposed of off-site, biologically treated, or recycled after chemical reduction with heat and ammonia, depending on site conditions. Note, however, that brine discharge options are not available at most sites and that the biological and chemical reduction processes have not been commercialized. The process demonstrated under this project, upon full development, is expected to reduce by a factor of 2,500 the volume of regenerant solution requiring disposal.
- **Leaching of N-Nitrosamines:** Possible leaching of N-nitrosodimethylamine (NDMA), N-nitrosodiethylamine (NDEA), or their precursors from IX resins into the treated water. Precursors derived from IX as well as other organics present in the water, unrelated to IX, can be converted to NDMA/NDEA by post-chlorination (Mitch et al., 2003) when using IX resins. The majority of NDMA generation is attributable to the manufacturing process, so resin reuse is expected to reduce generation. Moreover, bi-functional resin uses a combination of triethyl- and trihexylammonium functional groups that are structurally unlikely to leach NDMA (Mitch et al., 2003). NDEA formation is considered to be a possibility with triethyl- functionalized resins (Najm and Rhodes, 2000). N-nitrosodi-n-propylamine (NDPA) was also evaluated, because the California DPH has established notification levels of 10 nanograms per liter (ng/L) for all three of these related compounds.

- **Concentration of Radioactive Compounds:** Uranium (as uranyl carbonates) is captured and concentrated in anion IX systems. Uranium is responsible for approximately 80 percent of the aqueous gross alpha radiation in most drinking water supplies. However, bi-functional resins are less sensitive than many other resins to uranium accumulation because they are designed to reject multi-charged anions such as sulfate and uranyl carbonates that have relatively high hydration energy (Department of Toxic Substance Control [DTSC], 2004; Nyer et al., 2001; Gu et al., 2005.) More importantly, the captured uranium on bi-functional resin can be easily rinsed off with a dilute acid prior to the regeneration and reuse of the spent resin (Gu et al., 2005). Finally, uranium accumulation in the regenerant stream can be managed through a small percentage purge.

1.2 OBJECTIVE OF THE DEMONSTRATION

The general objective of the project is to demonstrate a reliable, more cost-effective method of treating low concentration perchlorate in drinking water supplies. The demonstration was performed at a scale that is sufficient to allow cost estimates for full-scale applications.

The Project Team demonstrated a system that represents the first integration of the three elements of regenerable IX perchlorate drinking water treatment:

1. Regenerable perchlorate-selective resins
2. Ferric chloride/hydrochloric acid regeneration
3. Perchlorate destruction and regenerant recycling

Specific technical objectives of the project were to:

- Assess water treatment performance at 150 gallons per minute (GPM) (9.4 x 10^{-3} cubic meters per second [m^3/s]) for approximately one year at an existing drinking water supply treatment facility
- Demonstrate that the IX system using resin regenerated resin with this process can reliably meet perchlorate drinking water treatment standards
- Evaluate other species that could potentially be affected by the resin and/or regeneration including nitrate, metals, NDMA, NDEA, NDPA, and uranium
- Quantify time to saturation/resin breakthrough over several regeneration and reuse cycles
- Verify key performance parameters of the regeneration unit process; for example, that the entire volume of regenerant solution used in regeneration

does not need to be treated in the perchlorate destruction module during each regeneration cycle

- Measure the rate of accumulation of impurities such as other anions, hardness, organic matter, uranium (if present), and particulate matter in the regenerant solution, to determine a purge rate necessary to control impurity accumulation
- Verify key performance parameters of the perchlorate destruction/regenerant recycling process at the 1 gallon per hour (GPH) (3.78 L/hr) scale. This includes 95 percent perchlorate destruction in the presence of impurities typical of an actual potable water supply
- Since the planned operations scale represents a 400-fold increase over a bench-scale perchlorate destruction unit used previously (Gu et al., 2003a), assess scaling parameters to support design and economic analysis for future scale-up to a regional-scale destruction facility

The first element of the technology, perchlorate removal from drinking water using the highly-selective bi-functional IX resin (D-3696, now known as Purolite A-530E), was demonstrated at an operating municipal water treatment plant in Fontana, California. The IX vessel is at minimum scale (20 ft^3 [0.57 m^3] of resin), but was tested at a higher ratio of flow-rate-to-bed-volume than would normally be used at full-scale, in order to saturate the resin in a reasonable timeframe for the demonstration. Given the relatively short mass transfer zone of IX, the increased flow rate was not expected to affect system performance. The resin regeneration and perchlorate destruction elements of the technology then took place at a Calgon facility in Pittsburgh, Pennsylvania. The regenerated resin was then re-used in FWC. The cycle of IX/resin regeneration/perchlorate destruction was repeated three times during the demonstration.

Influent perchlorate concentrations at the FWC site have historically been in the range of 7 to 24 µg/L. IX is a mature and well developed technology that is known to be effective in removing perchlorate to below 4 µg/L (Batista et al., 2000; Gu et al., 2000a; Gu et al., 2002a); selective resins, including the type used in this demonstration, are able to achieve perchlorate effluent concentrations below 1 µg/L.

1.3 REGULATORY DRIVERS

Throughout the United States., perchlorate standards or advisory levels are still evolving (https://www.denix.osd.mil/portal/page/portal/denix/environment/MERIT/EC/ECAL/Perchlorate/StatesReg) and currently range from 1 to 18 µg/L. DPH established a notification level (NL) (formerly referred to as an action level) for perchlorate of 6 µg/L. This NL was based on the public health goal (PHG) for perchlorate as determined by the California Office of Environmental Health Hazard Assessment (OEHHA). The PHG is the concentration of a substance that is considered not to pose a significant health risk, which OEHHA established as 6 µg/L for perchlorate in March 2004. OEHHA later reviewed the National Academy of Sciences' (NAS) report on perchlorate (NAS 2005),

and determined that no revision to the PHG was required. As required by California statute, DPH must establish a maximum contaminant level (MCL) for drinking water as close to the PHG as technically and economically feasible. In August 2006, the DPH proposed a MCL for perchlorate in drinking water of 6 µg/L, which became the MCL on October 18, 2007.

No enforceable federal standard has been established. However, the United States Environmental Protection Agency (EPA) established an official reference dose (RfD) of 0.0007 mg/kg/day of perchlorate in February 2005. This level is consistent with the recommended RfD included in the NAS report (NAS 2005). An RfD is a scientific estimate of a daily exposure level that is not expected to cause adverse health effects in humans. EPA's new RfD translates to a Drinking Water Equivalent Level (DWEL) of 24.5 µg/L. A DWEL, which assumes that all of a contaminant comes from drinking water, is the concentration of a contaminant in drinking water that will have no adverse effect with a margin of safety. In practice many water purveyors are conservative and consider treatment whenever perchlorate is found even if only a tentative detection (J-value).

A prepublication version of the EPA's preliminary determination that setting a national drinking water standard for perchlorate is not justified under terms of the Safe Drinking Water Act (SDWA) was released on October 10, 2008. EPA has conducted extensive review of scientific data related to the health effects of exposure to perchlorate from drinking water and concluded that fewer than 1 percent of drinking water systems have perchlorate levels above the health reference level (HRL), and perchlorate was not at levels of public health concern. EPA derived a perchlorate HRL of 15 µg/L for pregnant women and other sub-populations, including fetuses. In January 2009 EPA issued an interim health advisory for perchlorate in drinking water at 15 µg/L (http://www.epa.gov/safewater/contaminants/unregulated/pdfs/healthadvisory_perchlorate_interim.pdf), stated that it intends to seek further NAS' comment, and issue a "final regulatory determination as soon as possible". EPA also addressed the issue of cleanup levels:

> "***How does this decision impact clean up of perchlorate at Superfund sites?*** *As a result of the publication of the Interim Health Advisory for perchlorate, the Agency is formally withdrawing the January 26, 2006 guidance it issued regarding perchlorate and sites addressed under the Comprehensive Environmental Response, Compensation, and Liability Act (CERCLA) and the National Oil and Hazardous Substances Contingency Plan (National Contingency Plan or NCP). The January 2006 guidance recommended that Regions consider using a preliminary remediation goal (PRG) of 24.5 ppb (or µg/L). In its place, the Agency now recommends that Regions consider using the interim health advisory level of 15 µg/L as a PRG; consistent with the NCP, the Agency often considers health advisories as "to be considered" (TBC) values for setting cleanup levels. Also, where state regulations establish applicable or relevant and appropriate requirements (ARARs) for perchlorate, these standards should be used as the cleanup level at Superfund sites, unless the ARAR is waived at the site". http://www.epa.gov/safewater/contaminants/unregulated/perchlorate.html #questionsandanswers*

In addition to the above guidelines, that are used to determine where perchlorate treatment is required, the California DPH requires that any treatment technology used in drinking water applications must have National Sanitary Foundation (NSF) 61 certification.

2. TECHNOLOGY

2.1 TECHNOLOGY DESCRIPTION

A detailed description of the technology, its development and applications, is provided as part of Section 2.2. A schematic diagram of the technology is shown in Figure 2-1.

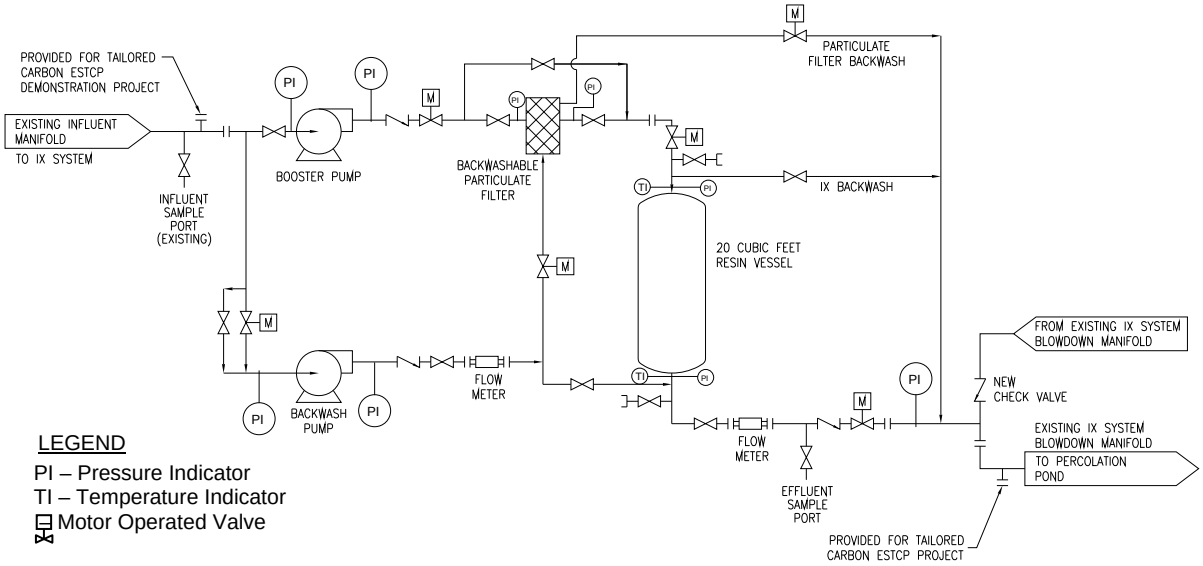

Figure 2-1. Process Schematic IX at FWC (Backwash Pump Shown was not Installed)

The on-site demonstration system was comprised of a 20-ft^3 (0.6 m^3) IX vessel, an interconnecting piping manifold, process instrumentation (e.g., pressure gauges, flow meters), booster pump, automatic backwash pre-filter system, and 20 ft^3 (6.8 m^3) of Purolite A-530E IX resin (Figure 2-1). The off-site regeneration system and perchlorate destruction module were fabricated and operated in Calgon's laboratory in Pittsburgh.

The existing, full-scale system in FWC does not utilize pre-filtration. Particulate accumulation at this site is very minimal. However, the demonstration system was equipped with an automatic backwash equipped pre-filtration system. This filter, included an automatic backwash module that that was activated by differential pressure across the filter. The filter was a Tekleen Model LPF4-LP equipped with a Tekleen

Model GB6-LPF automatic backwash controller that includes a differential pressure indicator and switch to initiate the backwash cycle. The system utilized a 10 micron (3.9 x 10^{-4} in) filter screen.

The FWC-17B and FWC-17C wells (or at least one of them) operate a majority of the time during summer months. The groundwater pumps are sometimes turned off during low-demand times, and the wells are also shut off if high nitrate conditions exist, which are monitored with an in-line sensor. Thus, the booster pump shown in Figure 2-1 was interlocked with the main well pumps. Anecdotal information suggests that nitrate concentrations forced the operators to shut down these wells for extended periods of time in the past, but reconfiguring the well packers has mitigated the high nitrate concentration shut downs at the time of the demonstration.

The demonstration system operated at a flow rate of approximately 150 GPM (0.6 m^3/min) or one (1) 20-ft^3 (0.6 m^3) BV per minute during the entire demonstration except when resin was being regenerated. To expedite perchlorate loading onto the resin during the last treatment cycle, the flow rate was increased to approximately 175 GPM.

2.2 TECHNOLOGY DEVELOPMENT

General overviews of IX technologies are provided in recent documents by Gu (2006), Interstate Technical Regulatory Council (ITRC 2008) and USEPA (2005). A more detailed discussion of the development of the perchlorate-selective resins, ferric chloride-HCl regeneration, perchlorate destruction and regenerant recycling technologies used in the FWC demonstration is provided here.

2.2.1 Development of Perchlorate-Selective IX Resins

ORNL developed a new class of bi-functional anion exchange resins, licensed to Purolite and Thermax, that have been demonstrated to be highly-selective in removing trace quantities of ClO_4^- to non-detectable levels from contaminated water (Gu et al., 2000a; Gu et al., 2002a). The bi-functional anion-exchange resins were originally developed for removing a structurally analog to perchlorate, pertechnetate (TcO_4^-), a radioactive anion, at parts-per-trillion concentrations from contaminated groundwater (Bonnesen et al., 2000; Brown et al., 2000; Gu et al., 2000a). A field pilot-scale experiment at the U.S. Department of Energy's Paducah Gaseous Diffusion Plant site demonstrated that < 3 percent breakthrough of TcO_4^- was observed after treatment of ~700,000 BVs of groundwater at an influent concentration of ~1 µg/L TcO_4^- (Gu et al., 2000a).

Perchlorate-selective resins have two quaternary ammonium functional groups, one having long chains for higher selectivity and one having shorter chains for improved reaction kinetics. Because TcO_4^- and ClO_4^- are chemically similar, the bi-functional resin also selectively captures ClO_4^-, leaving competing anions (such as HCO_3^-, SO_4^{2-}, and NO_3^-) in water.

The performance of this bi-functional resin in removing ClO_4^- has been demonstrated in small-scale field experiments at Aerojet and at Edwards Air Force Base (Figure 2-2) (Gu et al., 2000a; Gu et al., 2002a). Results indicate that the resin was extremely selective and efficient in removing ClO_4^-; at an influent concentration of ~50 µg/L, one resin bed was able to treat ~100,000 BVs of groundwater before a detectable breakthrough of ClO_4^- occurred. Similarly, at a higher influent concentration (~250 µg/L) and flow rate of ~150 GPM (567 L/min), the resin was able to treat ~60,000 BVs of groundwater before a significant breakthrough of ClO_4^- occurred.

Figure 2-2. Small-scale ORNL Perchlorate Treatment Systems were Built and Demonstrated at Edwards Air Force Base (Gu et al., 2005)

On the basis of these field tests and laboratory results, at influent concentrations of ~20 µg/L, the resin would be expected to treat ~200,000 BVs of contaminated water before regeneration is necessary due to perchlorate saturation, which implies that the resin would last approximately 5 months at a flow rate of 1 BV/min. The commercial version of this bi-functional resin is being marketed by the Purolite Company as A-530E, and has been NSF approved for the treatment of drinking water. Additionally, the presence of co-contaminants, such as chlorinated organic solvents (e.g., trichloroethene [TCE] and tetrachloroethene [PCE]) at concentrations expected at a drinking water treatment facility (i.e., less than 10 times the MCL), do not have an adverse affect on IX resins because they do not compete for IX sites; however, a separate treatment technology would be required for these co-contaminants. A particular advantage of the perchlorate selective resin system, in many situations, is that it minimizes changes in water chemistry as compared to other IX processes (Gu et al., 2003b; Gu et al., 2001; Smith, 2003).

Perchlorate-selective resins have the greatest perchlorate removal capacity, but higher resin costs than conventional resins. However, due to their much higher IX capacity for perchlorate (generating a much lower volume of solid waste in non-regenerable applications), the higher resin cost is offset and overall cost of treatment is significantly lower than with conventional- or nitrate-selective resins. Thus perchlorate selective resins are widely used in California for drinking water treatment. Perchlorate-selective resins are able to achieve perchlorate effluent concentrations below 1 µg/L. Resin characteristics, including capacity and cost, are summarized in Table 1-1.

At most full-scale sites, it is anticipated that resin beds will be able to operate at least 1 year between regenerations, and that the resin will be reusable for six (6) to eight (8) regeneration cycles. Therefore, the resin life is likely to be six (6) to eight (8) years of active service. Given the urgency of this issue to the Department of Defense (DoD), the demonstration was designed to fully assess the system in a short time. Testing was conducted using a higher ratio of flow-rate-to-bed-volume than would normally be used at full-scale, so that breakthrough would be achieved more rapidly than at full-scale. However, the experiment was designed so that even at this higher flow rate, the mass transfer zone would still be contained within the resin bed, so that the data obtained would be appropriate for scaling. For resin vessel scale-up, the most important factors are resin capacity and the length of the mass transfer zone. To ensure proper scaling, we monitored the component's (anion) concentrations in the effluent stream (breakthrough/saturation data) from the demonstration bed. From the breakthrough data, we were then able to measure the resin capacity and can compute mass transfer zone length.

2.2.2 Ferric Chloride-HCl Regeneration of IX Resins

Unlike strong base anion (SBA) acrylic resin, a perchlorate-selective resin cannot be regenerated via NaCl regeneration. The resin's selectivity is too high to overcome with a brine solution, even with hundreds of BVs of regenerant (Batista et al., 2000; Brown et al., 2000; Tripp and Clifford, 2000). Novel regeneration technology using $FeCl_4^-$ has thus been developed at ORNL for regenerating spent perchlorate-selective resins sorbed with ClO_4^- (Gu et al., 2001; Gu et al., 2002a). Regenerating the selective resins is expected to greatly lower their life-cycle costs since both the capital cost of the resin and the disposal cost of the spent resin are substantial.

$FeCl_4^-$ anions, formed in a solution of ferric chloride ($FeCl_3$) and hydrochloric acid (HCl), can effectively displace ClO_4^- from spent resins. $FeCl_4^-$ is a large, poorly hydrated anion similar to perchlorate and thus occupies the same active sites. This process effectively replaces perchlorate with chloride and returns the resin to its original state. Both laboratory and field-scale demonstration indicate that a nearly 100 percent recovery of the IX capacity can be achieved by washing with as little as ~1 BV of the $FeCl_3$-HCl solution. Perchlorate is efficiently concentrated into the first 0.5 – 1 BVs of the

regenerant solution and reaches a maximum concentration of ~110,000 mg/L (or ~1.1 M). This is equivalent to a concentration factor of approximately 5 to 6 orders of magnitude compared to the initial influent perchlorate concentration in groundwater. This efficient concentration factor facilitates cost-effective destruction of the perchlorate. In typical groundwater, a single bed of bi-functional perchlorate-selective resin can be expected to treat ~100,000 BVs of water. That single BV of resin may require less than 1 BV of regenerant to be sent to the destruction module. This equates to a 0.001 percent waste flow rate as compared to the 0.5 to 2.0 percent common with the ISEP and other brine-based systems.

Once ClO_4^- anions are displaced from the resin, the sorbed $FeCl_4^-$ ions are easily rinsed off the resin bed with water because of their unique chemical properties. Once rinsed into a water solution with a low chloride concentration, the $FeCl_4^-$ anions self-dissociate due to chemical equilibrium into *positively charged species* such as $FeCl_2^+$, $FeCl^{2+}$, and Fe^{3+}, which are repelled or desorbed readily from the resin bed by charge repulsion (since the resin is also positively charged). By this reaction, the resin is regenerated to its original state, with excess Cl^- as the counter anion in the charge balance. When the process is properly managed, the rinse water does not contain detectable ClO_4^-, and it can be disposed of to a publicly owned treatment works (POTW) (demonstrated in the 20-ft^3 scale regeneration tests conducted at Edwards Air Force Base [AFB]) (Gu et al., 2002a; Gu et al., 2003b).

Thus, the entire process uses a very small regenerant volume and offers a cost-effective means to regenerate these highly-selective anion exchange resins loaded with ClO_4^-. Additionally, because both $FeCl_3$ and HCl are inexpensive and their use in treatment of drinking water is well established, this new methodology should provide an environmentally safe, cost-effective means to regenerate these highly-selective, anion exchange resins loaded with ClO_4^-. Potential problems with iron precipitation are avoided because the initial rinses that contain the iron are acidic, while the later rinses are low in iron and closer to neutral pH.

This regeneration process is also applicable to any nitrate-selective resins used for perchlorate treatment and most perchlorate-selective resins (except Amberlite PWA-2). Tests reported by Gu et al. (2001) included both the A-530E/D-3696 bi-functional resin and the Purolite A-520E mono-functional anion exchange resin that has triethylammonium exchange sites. Tests have also been conducted on Purolite A-500 (Gu, 2006a). Based on theory, this process should be applicable to a wide range of resins.

Bench-scale results have demonstrated that the resin breakthrough curves are essentially unchanged after seven regeneration cycles. (Gu et al., 2004b; Gu et al., 2003b; Gu et al., 2001; Smith, 2003). The regeneration process, involving holding tanks and an acidic perchlorate solution, was performed off-site during this demonstration. It is expected that future commercial regeneration of resin will be performed at a regional regeneration facility. Use of a regional regeneration facility, as opposed to on-site regeneration, permits IIX to function as a drop in substitution for single use IX with no changes to perchlorate drinking water treatment capital or operating procedures.. For the scale-up of

the regeneration vessel, the two most important factors to match were the regeneration solution's linear velocity and length diameter (L/D) ratio. We note that the already existing minimum-scale regeneration system is expected to only require one scale-up step to full commercialization.

Calgon Carbon Corporation has developed improvements to the regeneration process that reduce the potential for the buildup of impurities in the regeneration loop that will be further described later in this document.

2.2.3 Perchlorate Destruction and Regenerant Recycling

The concentrated perchlorate in the regenerant solution can be catalytically reduced to chloride and water, thus the regenerant solution can be recycled. Ferrous iron usually serves as the reductant[2] and ferric ions serve as homogeneous catalysts. This patented methodology uses added ferrous iron, Fe^{2+} (as $FeCl_2$), to reduce ClO_4^- in the spent resin regenerant solution at a temperature near 200 °C (392 °F) (Gu et al., 2002b; Gu et al., 2003a). While ClO_4^- is reduced or destroyed, ferrous iron is oxidized to ferric iron, Fe^{3+}, which replenishes or "regenerates" the $FeCl_3$ regenerant solution. Therefore, the regenerant solution is expected to be reusable for many cycles. More importantly, it eliminates the need for disposal of hazardous regenerant wastes containing ClO_4^-.

The overall chemical reaction can be written as:

$$ClO_4^- + 8Fe^{2+} + 8H^+ \rightarrow Cl^- + 8Fe^{3+} + 4H_2O$$

The end products are chloride, ferric iron, and water. Batch kinetic experiments indicate that the reaction is slow at temperatures below 100 °C (212 °F), but accelerates quickly as temperature is increased. A complete reduction of ClO_4^- (with an initial concentration of ~9,000 mg/L) occurred in less than one hour at 195 °C (383 °F) in the $FeCl_3$-HCl solution at 20 atmospheres pressure, and the reaction half-life was only ~8 min. The pressure is primarily used to keep the water in a liquid state. No intermediate products were detected.

This process has been tested in a small batch system and both laboratory- and field-scale flow reactors at ORNL (0.1 mL/min up to ~1.5 GPH [0.1 mL/min up to ~0.14 m^3/day]) and has been exclusively licensed to Calgon Carbon Corporation. This field-scale flow-through reactor is shown in Figure 2-3, and it is capable of running spent regenerant solution at ~37 gallons per day (GPD) (0.14 m^3/day). Both bench-scale and pilot-scale perchlorate destruction using this technique have been tested under continuous flow conditions (Figure 2-3). The results indicated nearly complete degradation of ClO_4^- (> 95

[2] Ethanol or propanol may be substituted as the reductant in scale-up for some applications.

percent at an initial influent perchlorate concentration of ~5,000 mg/L or higher) (Gu et al., 2003a).

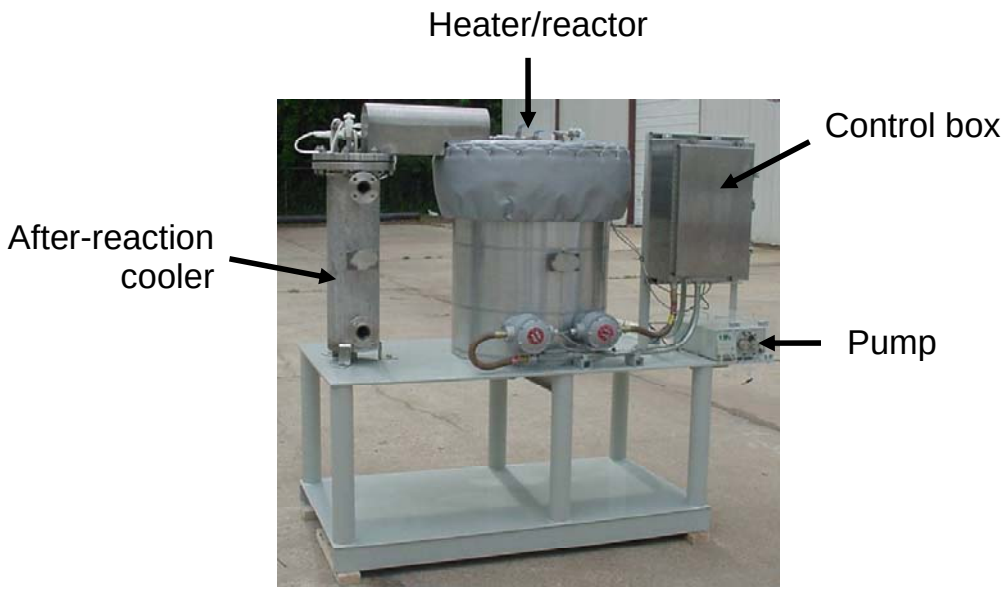

Figure 2-3. A Flow-through Destruction Reactor

The destruction system shown here is capable running spent regenerant solution up to 37 (GPD) (0.14 m^3/day), sufficient for technology demonstration (note the concentration factor of approximately 10^5 between water treated and regenerant solution volume). This reactor is currently installed at Calgon's Pittsburgh facility.

The ratio between destruction system capacity and drinking water treatment capacity is that a 1 to 5 GPM (0.004 to 0.02 m^3/min) destruction system can service 40,000 to 200,000 GPM (2.5 to 12.6 m^3/s) of drinking water treatment resin capacity. The largest currently-existing destruction system is in Pittsburgh, Pennsylvania, and has up to 37 GPD (100 mL/min) capacity. The capacity of a full commercial-scale regional system (a single unit serving dozens of municipalities) is projected to be 5 GPM (19 L/min) or 7,200 GPD (27 m^3/day). Therefore, the project was conducted using the destruction system in Pittsburgh. Later with separate funding we plan to scale-up the destruction process to approximately 500 mL/min (190 GPD) of concentrate. A 500 mL/min (0.13 GPM) system could destroy the perchlorate concentrate produced from an annual regeneration of the resin in a "Model 10" system (1,000 GPM [3.8 m^3/min]) in 30 days (and thus would be capable of serving a dozen separate Model 10 systems). Thus, this 500 mL/min (0.13 GPM) system represents an appropriate intermediate scaling step towards a regional facility. For scaling the destruction technology, the key elements controlling treatment efficiency are residence time, temperature and pressure.

2.3 ADVANTAGES AND LIMITATIONS OF THE TECHNOLOGY

Major advantages and limitations of the proposed new IX technology (selective bi-functional resin regeneration with $FeCl_3$-HCl, and perchlorate destruction) in comparison with conventional IX, brine regeneration technologies, or single-use, fixed-bed IX systems are listed in Table 2-1.

Table 2-1. Comparison of Advantages and Disadvantages of Using Different IX and Regeneration Techniques

	Non-selective, Brine Regeneration	Single-use Resin, Fixed-bed System	Selective Resin Regenerated by $FeCL_3$-HCl
Advantages	Effective and able to remove ClO_4^- Fast reaction, high flow rate, and simple operations Brine regeneration systems have been used previously at large scale but do not currently have a large market share	Effective and able to remove ClO_4^- Fast reaction, high flow rate, and simple operations Simplicity and low capital cost Widely used – large experience base and competition in pricing	Highly efficient and last > 5 times longer Particularly suited to remove ClO_4^- at low concentrations but high competing ion concentrations Fast reaction, high flow rate, and simple operations Low regenerant volume, ~1 BV per regeneration cycle Perchlorate recovered or destroyed, and regenerant recycled Low capital and minimized operational and waste disposal costs
Disadvantages	Competition by other anions (e.g., NO_3^-, Cl^-, SO_4^{2-}, HCO_3^-) Frequent regeneration and production of large quantities of secondary brine wastes High capital cost for continuous ion-exchange & regeneration system	High operational cost for resin replacement and disposal, disposal requires either incineration or landfilling Competition by other anions (e.g., NO_3^-, Cl^-, SO_4^{2-}, HCO_3^-)	Handling of highly acidic regenerant solution Resin cost about twice that of non-selective resins Chlorinated aliphatic hydrocarbons can be formed in the regeneration/destruction process

IX has been used for drinking water treatment for decades, so the technical risks of using the IX step of this technology is very low. The A-530E resin is commercially available from Purolite, and it has been NSF 61 certified for the treatment of drinking water. However, the regenerated resin and the regeneration process have not been NSF certified; currently, water treated using regenerated resin cannot be used as drinking water. A potential concern with this technology is the accumulation of impurities on the resin during multiple cycles, such as uranite. Relatively high concentrations of competing anions (such as SO_4^{2-}, NO_3^-, Cl^-, HCO_3^-) in the source water are not a significant concern for the IX, however, the elevated anion concentrations will increase the frequency of regenerations. The presence of relatively high concentrations of suspended solids (e.g., clay colloids) and reduced ferrous iron could potentially foul the resin bed, however, this problem is resolved by installing a simple pre-filter to remove suspended solids.

Another potential concern is the accumulation of impurities in the regenerant solution over multiple cycles. Regeneration using $FeCl_3$ and HCl effectively removes a variety of impurities from the resin, which may accumulate in the regenerant solution. Many organic impurities are expected to be removed from the regenerant solution in the perchlorate destruction step at elevated temperature and pressure, and nitrate will be converted to nitrogen gas. Nitrate input to the regeneration and destruction process is minimized by the selectivity of the resin. Nitrate will be reduced to nitrogen by ferrous iron in the destruction module:

$$2NO_3^- + 10Fe^{2+} + 12H^+ \rightarrow N_2 + 10Fe^{3+} + 6H_2O$$

This nitrate destruction reaction is thermodynamically favored over perchlorate destruction, and therefore nitrate destruction efficiency can be expected to be greater than perchlorate destruction. The relative kinetics of these processes have not, however, to our knowledge, been studied. The fate of other inorganic impurities is an issue carefully studied during the demonstration, with the aim of defining the envelope of site-specific conditions over which this technology will have low life-cycle costs. Expectations prior to the demonstration were that nitrate, chloride and sulfate would be eluted earlier than perchlorate during the regeneration process. The regeneration solution is a strong acidic solution (4M HCl); therefore, bicarbonate will be evolved as carbon dioxide (CO_2), additionally, the bifunctional resin is least selective for bicarbonate, therefore very little bicarbonate is expected in the regenerant solution. Multiple methods could be employed to maintain the sulfate (and other contaminants) at acceptable levels. Process improvements developed by Calgon Carbon Corporation for this purpose include:

- A step prior to the regeneration in which the resin is washed with a dilute acid/salt solution. The benefits of an acid wash for one impurity - uranium - were shown by Gu et al. (2005). Calgon has modified and refined the rinse protocol discussed by Gu et al. (2005).
- A modification to the post-rinse step at the end of the regeneration process in which some of the rinses are made with an aqueous solution of a common, nontoxic inorganic substance instead of water

A post-destruction partial purge of 10 to 40 percent of the 2 BVs of solution can also be used to maintain/control the concentration of impurities such that they will not significantly impact the regeneration efficiency.

The regeneration and perchlorate destruction processes require the handling of corrosive HCl, although it is noted that the use and handling of HCl is a routine process in general industry. For example, the use of HCl for resin regeneration in the refining and processing of sugar is well established. HCl is inexpensive and available in food-grade solutions. During demonstration and full-scale treatment applications, Calgon will operate a regional, off-site regeneration and perchlorate destruction facility (similar to a carbon re-activation plant), to make the job of the municipal operators simpler and to avoid on-site handling of HCl and other hazardous and corrosive materials. Calgon has

conducted some initial commercial regeneration operations (without the destruction step). These operations have focused on remediation sites since the process is not yet NSF approved.

The construction materials of the destruction module must be able to resist HCl corrosion in a high temperature, high pressure environment. The original reactor was constructed of glass tubing, and the 100 mL/min (1.5 GPH) Pittsburgh reactor is constructed with tantalum metal, which resists HCl corrosion. Thus, alternative materials of construction should be identified to lower the capital cost. Teflon and glass lined reactors are common in the chemical industry and will be considered. Scale-up to the 500 mL/min (8 GPH) reactor size will involve coupon testing for materials durability.

One issue of concern with any IX system is that organic compounds can leach off of the resin material, including N-Nitrosamines or their precursors. Most of the NDMA stems from the resin manufacturing process and, thus, is minimized by pre-rinsing of the virgin resin prior to use. We also expect that N-Nitrosamines generation can be minimized by reuse of regenerated resin. More importantly, unlike other IX resins, bi-functional resins do not use trimethylammonium functional groups, so it is highly unlikely that our treatment process will generate any NDMA (see Table 1-1) but NDEA formation is possible. Although the resin is rinsed after regeneration, some residual acidity may still be suspected. This can easily be managed through pH monitoring and, if necessary, addition of base to the 20 BVs of rinse water used at the end of the regeneration process. Iron oxyhydroxide and/or biomass buildup on the bed can decrease the effectiveness of the system and regeneration. However, simple, commonly applied pre-filtration (i.e., 10 micron [3.9×10^{-4} in]) reduces this issue.

A potential concern that sometimes occurs with IX systems is the concentration of naturally occurring uranium, which may be present at very low concentrations in some areas. Gu et al. (2005) recently found that the bi-functional resin actually has a lower affinity to capture uranium than SBA resins. However, this issue can easily be dealt with either by a dilute acid rinse to strip uranium off the resin bed first (before it is regenerated) or by the addition of a small resin canister that is specific to uranium removal. Gu et al. (2005) showed that a rinse with dilute HCl could remove 75% of the uranium but only 0.1% of the perchlorate. Calgon and ORNL are currently developing approaches to allow IX systems to be used with regeneration in high uranium water (Gu et al., 2004a) but this was not a major subject of the current demonstration. The influent concentration of uranium at the FWC site, 1.6 µg/L, is not particularly unusual compared to the range of 0.1 to 10 µg/L found in "most natural water" (Hem, 1992). Agency for Toxic Substances and Disease Registry (ATSDR) (http://www.atsdr.cdc.gov/toxprofiles/tp150-c5.pdf) gives an average concentration for uranium in drinking water in California as 2.7 pCi/L (1.8 to 4.1 µg/L, depending on conversion factor used).

3. PERFORMANCE OBJECTIVES

3.1 QUANTITATIVE PERFORMANCE OBJECTIVES

Performance objectives are summarized in Table 3-1 and discussed briefly in the subsequent subsections of section 3. A more extensive analysis is presented in Section 6 "Performance Assessment".

Table 3-1. Performance Objectives

Type of Performance Objective	Performance Criterion	Performance Metric	Actual Performance Objective Met?
Quantitative	Ability of fresh and regenerated resin to meet California DHS notification level (AL) for perchlorate	Treatment of typical Fontana concentrations of perchlorate to <6 µg/L after 1 or more regeneration cycles (Note however that many utilities will target treatment to <4 µg/L to provide an additional safety factor)	YES
	Efficacy of regenerated resin compared to fresh resin	Two Measurements: 1. Volume treated before breakthrough for regenerated resin 80-120% of that of fresh resin in the same system 2. Mass removed before saturation for regenerated resin 80-120% of that removed by fresh resin in the same system	YES
	Leaching potential of fresh and regenerated resin to yield concentrations below. California DHS notification levels or MCLs for nitrate, metals (Title 22) NDMA, NDEA, and NDPA	After 1 or more regeneration cycles, NDMA <10 ng/L; NDEA <10 ng/L; NDPA <10 ng/L; Nitrate (as NO_3) <45 mg/L	YES
	Verify high level of perchlorate destruction in the presence of typical impurities in potable water supply within the Inland Empire	95% perchlorate destruction	YES
	Accumulation of uranium in the integrated process	Monitor uranium in resin and regeneration and destruction streams. Ensure that the resultant level in the treated water does not exceed the MCL 30 µg/L or the approximately equivalent state MCL of 20 pCi/L	YES
Qualitative	Reduced treatment costs	Reduce treatment costs significantly (at least 25%) over conventional IX technology by reducing waste disposal and resin re-use	Partial - Cost reduction of 12% shown

Type of Performance Objective	Performance Criterion	Performance Metric	Actual Performance Objective Met?
	Scalability	Identify & assess scaling parameters for regeneration and destruction units	PARTIAL
	Successful integration of three technology elements	Identify, assess and overcome integration issues	PARTIAL
	Time to saturation of regenerated resin over several cycles	Observance of breakthrough levels of perchlorate, leaching concentrations of nitrate, metals (Title 22), NDMA, NDEA, NDPA	YES
	Rinse volume requirement (during regeneration)	Determine how many bed volumes of rinsing are required at pilot- scale	PARTIAL
	Rinse water treatment requirement	Document the required neutralization or other rinse water treatment before discharge	YES
	Regeneration process efficiency	Verify that 6 BVs of regenerant is optimum. Verify that not all of volume used in regeneration need be treated in destruction module	It was shown that < 6 BVs of regenerant is optimum. Not all the volume need be treated in the destruction reactor.
	Determine purge rate necessary to control impurity buildup during regeneration	Measure rate of accumulation of anions, hardness, organic matter, Uranium, particulate matter in regenerant solution, to select purge rate	Monitoring performed, however these did not become limiting in the number of cycles performed.
Qualitative	Determine optimum destruction conditions	Determine flow rate and temperature optima in pilot-scale unit at constant reluctant dose and pressure	PARTIAL
	Ease of operation & maintenance	From the perspective of the municipal operator, O&M same as or better than current IX systems	YES
	Regenerant readjustment requirement	Document the amount of readjustment required to the recycled regenerant to meet acceptance criteria.	PARTIAL

3.1.1 Meet California DHS Notification Level for Perchlorate

As discussed in section 6.1, both virgin and regenerated resin produced water containing no perchlorate above the reporting limit for ~100,000 BVs. The demonstration continued to load the resin bed past perchlorate breakthrough to saturation, where the treated effluent perchlorate concentration exceeds 90% of the influent perchlorate concentration. In a typical lead-lag treatment configuration, perchlorate breaks through the lead bed and is removed by the lag bed while the lead bed becomes saturated.

3.1.2 Efficacy of Regenerated Resin as compared to Virgin Resin

Regenerated resin compared quite favorably to virgin resin in this demonstration. Breakthrough with regenerated resin occurred between 85 and 119% of the virgin resin breakthrough. Regenerated resin loading before saturation was estimated at 83 to 90% of the virgin resin loading before saturation. As discussed in section 6.2, the discrete sampling intervals utilized for this project limit the precision of breakthrough and loading estimates.

3.1.3 Meet California DHS Notification Levels or MCLs for Nitrate, Title 22 Metals, and Nitrosamines

The regenerated resin produced water meeting DHS notification levels or MCLs for nitrate, Title 22 metals, and nitrosamines. While the water nitrate utility did manage pumping operations upstream of the IIX system to meet the nitrate MCL, no nitrate rollover was observed exceeding the MCL. Similarly, no metals exceedances were encountered when using regenerated resin although a few were noted with virgin resin. Neither NDMA, NDEA, or NDPA were detected at greater than 10 ng/L in the treated effluent while using regenerated resin. A more detailed discussion of these performance criteria is presented in section 6.3.

3.1.4 Perchlorate Destruction

Perchlorate was destroyed in a high temperature reactor through reduction with ferrous iron. In parametric tests, destruction efficiencies of over 99% perchlorate were achieved. Parametric tests indicate 95% destruction can be achieved at 180 C with a residence time of 1.4 hours. Long-term semi-continuous runs, simulating commercial operation, were generally able to achieve 95% perchlorate destruction. High concentrations of nitrate in the destruction reactor caused process upsets; management options would include minor modification to reactor design and feed material selection/management.

3.1.5 Accumulation of Uranium

Although the perchlorate-selective resin does accumulate uranium during the perchlorate treatment cycle, no uranium exceedances were observed in treated water using regenerated resin. The uranium removed during treatment is largely recovered within a preliminary step of the regeneration process. No rollover of uranium was observed during perchlorate treatment. Uranium breakthrough during perchlorate treatment was very similar to perchlorate breakthrough. The amount of uranium on the saturated resin could create shipping and receiving difficulties in extraordinary conditions, but there is no evidence that this would be more of an issue with regenerated resin than with virgin resin.

3.2 QUALITATIVE PERFORMANCE OBJECTIVES

3.2.1 Reduced Treatment Cost

The cost model for IIX is discussed at length in section 7. Although the model does demonstrate significant cost savings as the result of using IIX over using single-use IX for perchlorate treatment, the cost savings does not rise to 25%. IIX is modeled to be 12% less expensive than single-use IX over a 30 year treatment cycle. As there are no additional capital costs to the water utility of implementing IIX, the cost savings depends entirely on the price of regeneration service compared to the price of virgin resin and resin destruction.

3.2.2 Scalability

In this demonstration, regenerated IX resin was used for perchlorate treatment at nominally 150-190 GPM. The IX process continues to scale with regenerated resin in the same manner as with virgin resin. These systems generally scale above 2000 gallons per minute by adding parallel treatment trains of larger IX vessels.

The components and processes of the regeneration reactor mirror the mass transfer operations of the IX process and thus are expected to scale in a similar manner. As discussed in section 6.7 the dramatic scale-up from bench-scale to pilot-scale of the regeneration process has proceeded smoothly. Thus few difficulties are expected with further scaling the regeneration reactor should further scale-up be needed. The process economics would remain favorable for reactors with much higher pressure drops than in the demonstration reactor, but the bed volume and thus pressure drop are expected to be limited practically by the volume of the wellhead treatment vessel which provides the resin to be regenerated.

Although the destruction reactor proved capable of processing 60 mls/minute, substantial difficulties were encountered in operation. In addition to the high pressures and specialized materials required for the reactor, byproduct production needs to be managed. Gases created in the reactor caused operational difficulties requiring either feed management or physical redesign of the reactor. In addition, halogenated VOC were

produced in the destruction reactor, which needs to be managed to prevent carryover to the regenerated resin.

Thus scale-up of the regeneration process without the specialized high-temperature destruction process appears to be the most likely midterm path to commercialization of this technology. Indeed commercial operations have already been conducted on this basis for nondrinking water applications.

3.2.3 Integration

The three components of IIX were successfully operated within this demonstration. Regenerated resin could be used to produce acceptable water with respect to all components evaluated. The regeneration successfully utilized recycled regenerant from prior cycles without adverse effects. The destruction reactor was capable of achieving >95% perchlorate destruction with the effluent being suitable for re-use as regenerant. The major issues to be optimized with the regeneration procedure are largely volume and flow management, none of which prevent commercial operation. The major issues with the destruction reactor include process upsets resulting from high nitrate concentration and the production of VOCs. Further development of the destruction reactor is likely required to reduce iron reagent consumption, eliminate VOC production, and improve operational stability. Scale-up of the destruction reactor would require continued work with materials resistant to strong acid at high temperatures and pressures. Thus scale-up of the regeneration process without the specialized high-temperature destruction process appears to be the most likely midterm path to commercialization of this technology.

3.2.4 Time to Saturation

Time to perchlorate saturation was determined in BVs treated as described in section 6.1. Time to perchlorate saturation remained fairly constant through four loading cycles. There was no discernable trend in time to saturation with successive loading or regeneration cycle. Nitrate and metals generally saturated the resin prior to perchlorate saturation. Nitrosamines are detected sporadically in both influent and effluent suggesting dampening of the Nitrosamine concentration but not significant absorption release or IX.

3.2.5 Rinse Volume Requirement

Wash and rinse volumes were largely held constant during this demonstration. Never-the-less, regeneration process changes made during this demonstration eliminated one rinse cycle, nominally 10 BVs of wash water. In addition, elution profiles of the dilute acid wash, used to pre-treat the resin prior to regeneration, indicate that less acid wash could be used in future applications. More opportunities for optimization exist and are interdependent with the volume management of the tetrachloroferrate, acid, and water.

3.2.6 Rinse Water Treatment

The amount of neutralization agent, expressed as sodium hydroxide, required for the demonstration is documented in section 6.11. The amount of neutralization agent normalized for resin volume required for full-scale implementation will likely diminish as a result of improving volume management and wash and rinse cycle optimization.

3.2.7 Regeneration Process Efficiency

In this demonstration, an essentially constant 6 BV of tetrachloroferrate regenerant was used to remove perchlorate from the resin through three regeneration cycles. Although six BVs of tetrachloroferrate was clearly sufficient, it appears that a much lower volume would be optimum. The current data suggest that nominally 2 BVs would be sufficient to remove the overwhelming majority of the perchlorate.

Throughout the demonstration, the majority of the tetrachloroferrate used to regenerate the resin was reserved without further treatment (i.e., perchlorate destruction) for use in the next regeneration cycle. Although much of this reserve quantity contained little perchlorate, some of the reserve volume contained significant quantities of perchlorate. In the third regeneration cycle, significant concentrations of perchlorate were present in the feed tetrachloroferrate but did not have any adverse affect on resin regeneration.

3.2.8 Purge Rate

Although the concentration of metals and other ions in the tetrachloroferrate regenerant was monitored during the demonstration, the limited number of cycles in the demonstration did not produce contamination sufficient to interfere with the regeneration process. The purge rate must be equal to or greater than the amount of liquid iron solution added for the destruction process. The purge rate is also influenced by the amount of concentrated tetrachloroferrate lost by dilution with the initial rinses that displace the tetrachloroferrate.

3.2.9 Optimum Destruction Conditions

The rate of perchlorate destruction at constant ferrous stoichiometry was determined over a range of reaction temperatures and flow rates. No single optimum in either temperature or reaction time was found. The destruction rates found in this demonstration are consistent with the pseudo-first order rates published (Gu et al., 2003). Destruction rates are found to increase with increasing reaction temperature. Conditions sufficient for ≥ 95% perchlorate destruction are identified in section 6.14.

3.2.10 Operation and Maintenance

From the perspective of the water system operator, no difference in O&M was experienced relative to single-use IX technology. O&M experience during this demonstration is documented in section 5.5.2.

3.2.11 Regenerant Readjustment

As with the reagent purge rate, there were too few cycles in this demonstration to identify the limiting quantity of reagent required for readjustment of regenerant composition between cycles. The purge rate and additional reagent required were functions of the tetrachloroferrate lost to displacement during rinse cycles and the amount of ferrous iron required to be added for perchlorate destruction. The excess ferrous iron from perchlorate destruction is now expected to buildup in the regenerant reducing the ferrous iron demand in subsequent cycles. The data also suggest that less ferrous iron could be added than was added in this demonstration since perchlorate was extensively reduced without substantial nitrate reduction. These factors, along with improving volume management, are expected to reduce the ferrous iron and makeup regenerant requirements.

4. SITE DESCRIPTION

The field demonstration was performed at the FWC existing perchlorate treatment facility located in Fontana, California, adjacent to groundwater production wells FWC-17B and FWC-17C. The site was selected by ESTCP in consultation with local municipalities and the project team

4.1 SITE LOCATION AND HISTORY

The field demonstration was performed at FWC's existing perchlorate treatment facility located in Fontana, California, adjacent to groundwater production wells FWC-17B and FWC-17C. FWC is a subsidiary of the San Gabriel Valley Water Company, which uses a drinking water source mix of approximately 85 percent groundwater, 14 percent surface water, and 1 percent purchased water (FWC, 2004). The demonstration site has several characteristics that made it suitable for the demonstration:

- Water chemistry that is representative of the California Inland Empire
- Adequate supply of water for testing
- Piping infrastructure available for relatively easy connection
- Nearby electrical source for the booster pump
- National Pollution Discharge Elimination System (NPDES)-permitted percolation pond for discharge of treated demonstration water
- FWC had 12 DPH-certified water treatment system operators that inspected the demonstration system on a near-daily basis

The FWC full-scale perchlorate treatment system at the same site utilizes one-pass (non-regenerable) IX that is comprised of five (5) parallel trains of lead-lag vessel pairs (a total of 10 IX vessels), and has a maximum treatment capacity of approximately 5,000 GPM (0.3 m^3/s). Production wells FWC-17B and FWC-17C pump water through the treatment system and then to the FWC's distribution system reservoir. Currently, the IX system utilizes Purolite A-530E resin, the same resin that was used during the demonstration. The site also has an NPDES-permitted percolation pond that is used to discharge water generated during resin change-outs and well blowdown, and was used to discharge the treated demonstration water. A site location map is provided as Figure 4-1.

Figure 4-1. Site Map, FWC-17B and FWC-17C

4.2 SITE GEOLOGY, HYDROGEOLOGY AND CONTAMINANT DISTRIBUTION

Several large perchlorate plumes have impacted at least 20 large municipal drinking water supply wells in California's Inland Empire, resulting in their removal from service or installation of costly treatment systems. The demonstration site houses two groundwater production wells, a drinking water reservoir, a percolation pond, and a perchlorate treatment system. The site sits above a large regional perchlorate plume (illustrated on Figure 4-2) that is unrelated to past or current site operations, and is located in a light industrial/residential area of Fontana, California. Groundwater from the two production wells is representative of perchlorate-impacted water in the Inland Empire of Southern California.

Groundwater chemistry for both production wells is summarized in Table 4-1. Historical trends for two contaminants, perchlorate and nitrate, over time are shown in Figures 4-3 and 4-4 based on data provided by FWC and graphed by ARCADIS. FWC provided data for nitrate spanning the demonstration time period is shown in Figure 4-5.

Table 4-1. Production Well Groundwater Chemistry (X/Y Indicates Multiple Measurements)

Well Identification (ID):	FWC-17B	FWC-17C	Average
Production Rate (GPM):	1,290	1,850	3,150 (Total)
Production Rate (m^3/min):	4.9	7.0	11.9
Average Water Quality Parameters:			
Perchlorate (µg/L)	18/12	8.6/7.7	11.6
Nitrate (mg/L) as Nitrate	36/30	33/32	32.8
Chloride (mg/L)	11/8.9	11/12	10.7
Sulfate (mg/L)	14/16	14/15	14.8
Carbonate/Bicarbonate (mg/L)	ND/192 & ND/210	ND/186 & ND/180	ND/192
pH	7.5/6.94	7.5/8.17	7.5
TDS (mg/L)	250/250	238/270	252
Specific Conductance (µmho/cm)	415	388	401
Volatile Organic Compounds (µg/L)	ND	ND	ND

ND – Non-Detect
TDS – Total Dissolved Solids

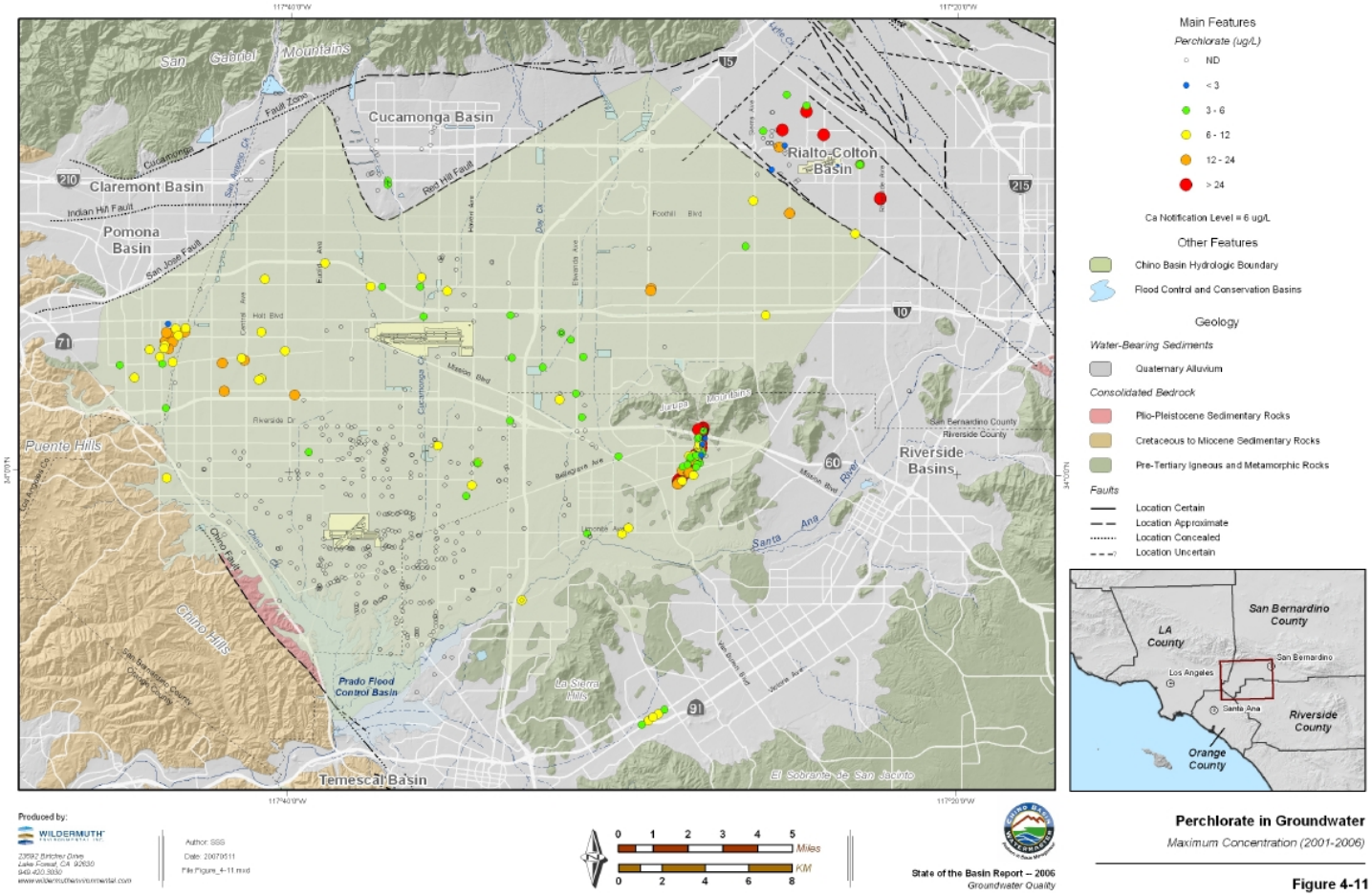

Figure 4-2. Perchlorate in Groundwater in Chino Basin

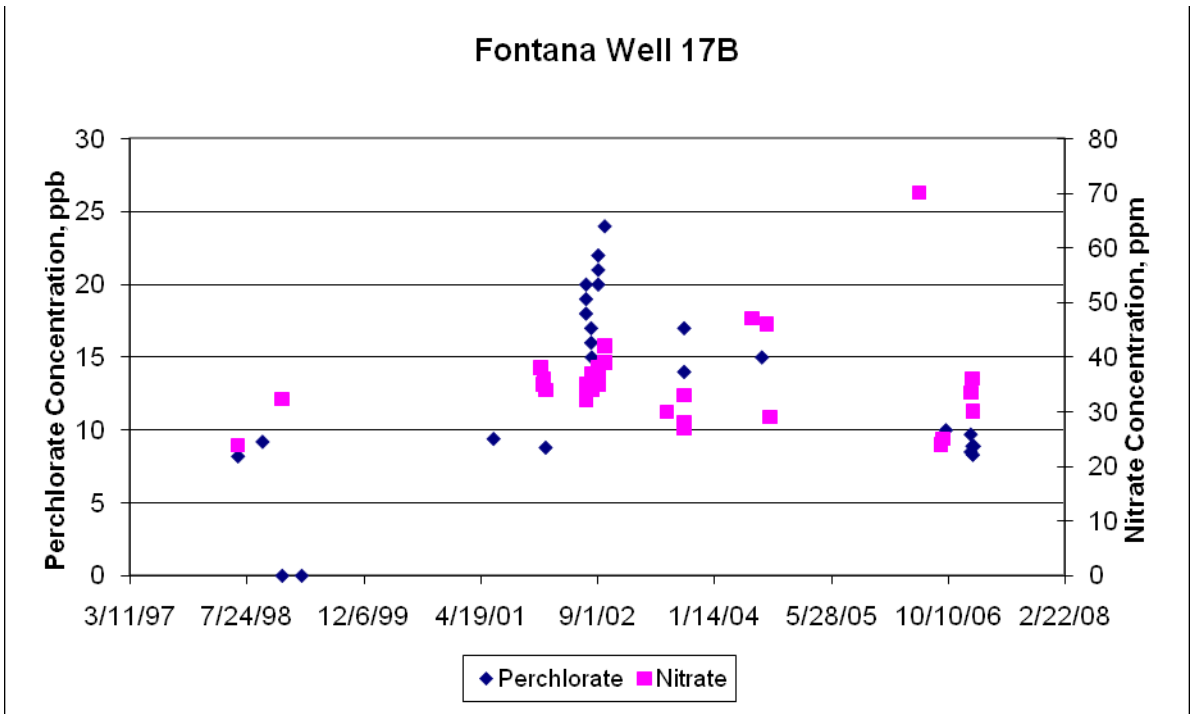

Figure 4-3. Historical Trends in Nitrate and Perchlorate Concentration in Well FWC-17B

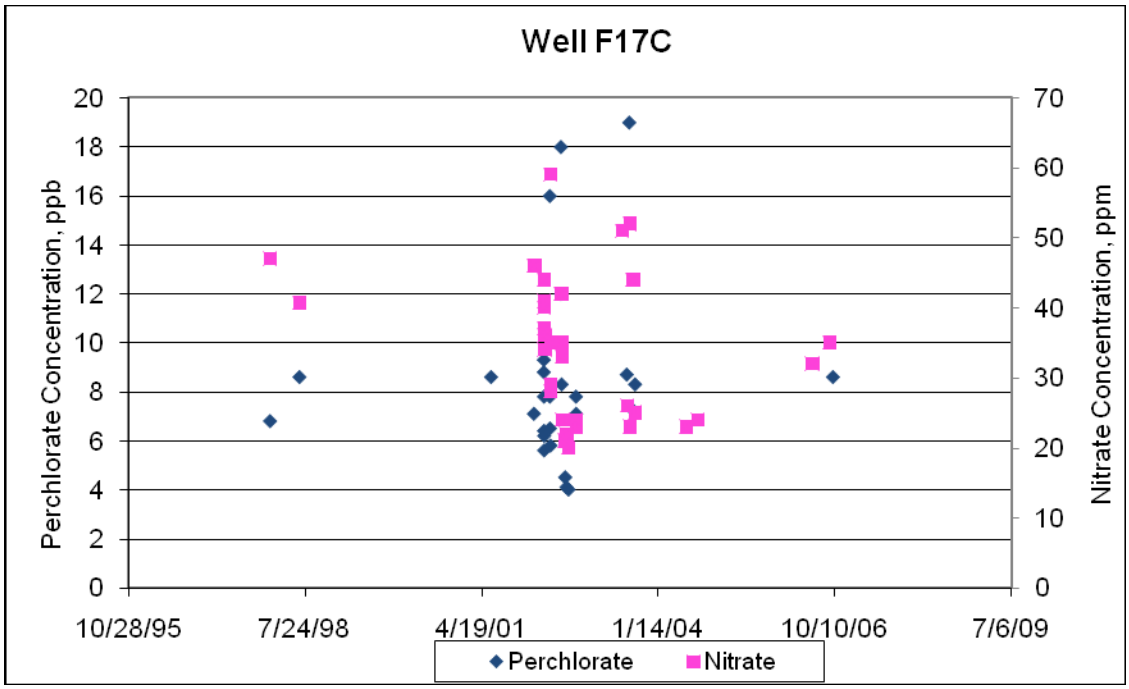

Figure 4-4. Historical Trends in Nitrate and Perchlorate Concentration in Well FWC-17C

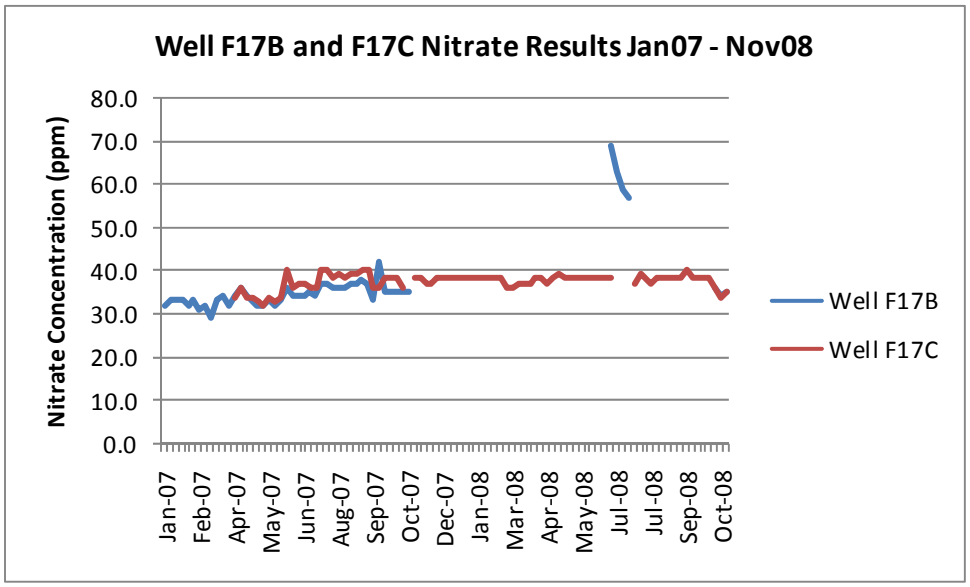

Figure 4-5. Nitrate Concentration for Wells FWC-17B and FWC-17C during 2007 and 2008, Data Provided by FWC

These particular wells extract groundwater from the Chino formation. The water chemistry of the Chino formation as a whole has been extensively studied by the Chino Basin Watermaster (http://www.cbwm.org/ov_engineering.htm) and by the United States Geological Survey (USGS) in their report on the Santa Ana watershed (http://pubs.usgs.gov/wri/wri02-4243/text.html). From these documents it is clear that these wells are likely to be quite high in dissolved oxygen (DO) (> 50% of saturation), with dissolved organic carbon below 1 mg/L, phosphorous below 0.04 mg/L and have alkalinities between 130-180 mg/L as $CaCO_3$

The pumping times for the wells at the FWC-17 location are controlled by the demand in the distribution system pressure zone into which they pump, and the ability to vacate water from this zone, in order to keep at least one of the wells running at all times. In the winter, operation is typically limited to one well. In the summer both wells are generally operated. Fall and spring operations are based on demand.

FWC is observing some fluctuation in nitrate concentrations that they attribute to operation of both wells at the same time. Their Supervisory Control and Data Acquisition (SCADA) system is set to automatically trip off the groundwater pumps if the nitrate concentration exceeds a pre-set value. However FWC staff trend nitrate concentration and can respond before a system trip.

FWC utilizes well packers in FWC-17B and FWC-17C to regulate nitrate concentrations in the extracted groundwater. Well packers are inflatable devices that provide a seal between the outside of the production tubing and the inside of the wellbore wall.

Well FWC-17B has the following specifications:

- Originally drilled to 870' (265 m) below ground surface (BGS).
- The screened interval is from 500' to 860' (152 m to 262 m).
- The casing is 16" (0.4 m) steel.
- The static level as of April 2006 was 326' (99 m).
- The pumping level was 349' (106 m) in 3-06.

Well packers are used in well FWC-17B as follows: The original well packer (specifically, a K-Packer) was installed in July 2002. It was installed at 650' (198 m) BGS. It was removed in October 2004, and the equipment changed to increase the flow rate. The nitrate concentrations at that time were suitable to do so. As of early 2006 the nitrate concentrations in FWC-17B were 59 mg/L, as nitrate and thus a new inflatable packer was installed in June 2006.

Well FWC-17C has the following specifications:

- Screened interval: 500' to 920' (152 m to 280 m) BGS
- Total depth: 930' (283 m) BGS
- Slot Size: 3/32" (0.23 cm)
- Packer Depth: 610' (186 m) BGS (approximately 40' (12 m) above the clay barrier)
- Water Level: 359' (109 m) BGS (standing level in March 2006)
- Pumping Level: 363' (111 m) BGS (pumping level in April 2006)

FWC had originally installed a well packer in FWC-17C also. It was installed at 650' (198 m) BGS and the flow rate was reduced from 2800 GPM (10.5 m^3/min) to < 2,000 GPM (7.6 m^3/min). FWC decided they could allow some of the water from the upper strata to pass an inflatable packer, increasing the flow rate and still yielding an acceptable concentration of nitrate. They now are producing close to 3000 GPM (11.3 m^3/min) at 26 mg/L of nitrate, as nitrate. The packer is now completely inflated.

5. TEST DESIGN

5.1 CONCEPTUAL EXPERIMENTAL DESIGN

5.1.1 Experimental Design Overview

The three unit processes that make up this integrated process are at different stages of development. The priorities in our experimental design were controlled by these developmental stages:

1 The performance of *newly manufactured* A-530E bi-functional perchlorate-selective resin has been verified in a number of commercial applications across a range of water quality conditions at different sites (Milbury, MA, Fontana, CA, Aberdeen, MD, Aerojet, CA). The resin has been in wide commercial use for perchlorate treatment in drinking water. The performance of the fresh resin over a range of design and operating factors has already been documented. Our experimental design thus allows us to compare the performance of fresh resin to regenerated resin, and then to resin regenerated with recycled-regenerant. The primary emphasis was to observe the performance of the resin over multiple regeneration cycles, and to verify performance over four regeneration cycles (the maximum number that could feasibly be completed within a typical ESTCP project schedule). Because the resin cost is a significant factor in the overall treatment cost, determining the regenerative ability of the resin is a key parameter.

2 The regeneration process has been thoroughly tested at the laboratory scale and has been tested at a limited number of sites on a pilot-scale for environmental purposes. In environmental applications the influent concentration of perchlorate to the resin and thus the perchlorate loading on the resin is typically higher than in drinking water applications since remediation systems are typically located closer to the point perchlorate was released. We planned to use these tests with the FWC drinking water supply to compare performance to previous projects that looked at this unit processes on a laboratory scale and pilot-scale (e.g., Edwards AFB, Aerojet).

3 The destruction unit process has had the least testing of the three unit processes in this integrated system. However, testing has been done at the laboratory scale (both bench and flow reactors) using regenerant from resin used for perchlorate treatment at Edwards AFB in California (Gu 2003b) and a pilot-scale reactor had been built and was available for this demonstration.

Given the complexity of this system, any project that sought to independently vary all of the potentially important design and operating factors at field scale would be financially prohibitive. Our experimental design was thus focused on describing the limiting critical design and

operating factors. Specifically, we have looked at those factors with the greatest economic and technical uncertainty, and with the greatest economic importance.

One important focus of the demonstration design was evaluating those parameters that can only be observed over a long time period of operation. The regeneration system has been previously operated primarily in remediation applications. The current applications to drinking water treatment may be more demanding in some regards. Often the ratio of certain co-contaminants, such as nitrate and uranium to perchlorate, will be higher in a drinking water application (for example, the ratio of nitrate to perchlorate is 1000 times higher at FWC than at Edwards AFB). The fact that some of these critical operating factors, such as accumulation and impurities, can only be observed during a year-long testing period has limited our ability to intentionally vary operating parameters within the FWC demonstration.

Our demonstration was designed to gather data on the scalability of the regeneration and perchlorate destruction systems. During experimental design of the regeneration and perchlorate destruction systems it is important to recall that these are envisioned ultimately to be regional or central facilities serving many municipalities across several states. Therefore, it is unlikely that these facilities will be optimized to the conditions of a given site. They are more likely to process resin from a number of sites simultaneously. As multiple batches are processed simultaneously or in rapid sequence from geographically separated facilities, this will tend to "even out" any site-specific issues in the operation of these processes.

Process flow and schematic diagrams for this three-part system are provided as Figures 5-1 through 5-8. Narrative descriptions of the various parts of the process are provided in Sections 2.2, 5, 5.1, 5.4 and 5.5.

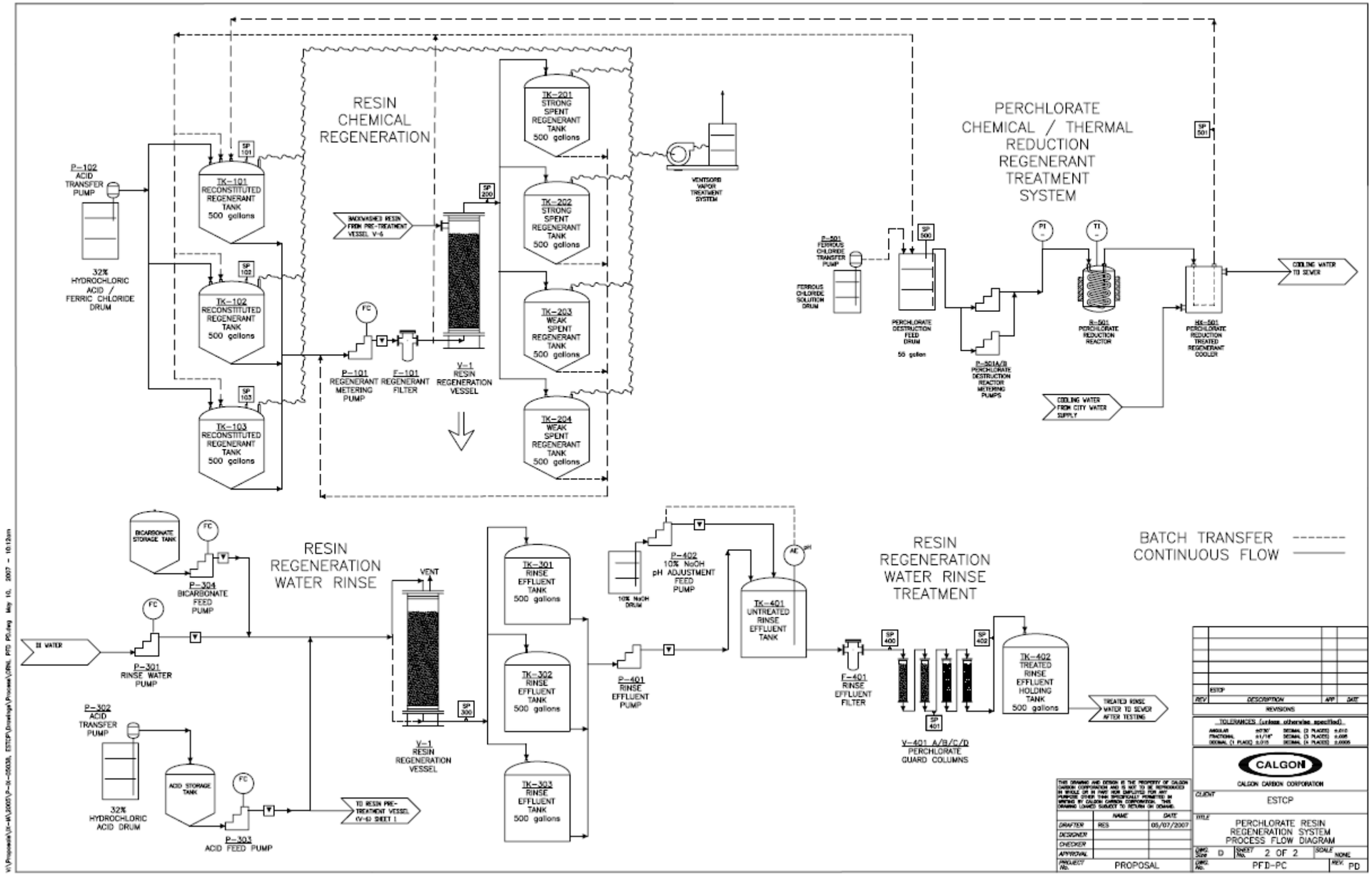

Figure 5-1. Diagram of Regeneration, Rinse, and Destruction Systems Showing Sampling Points

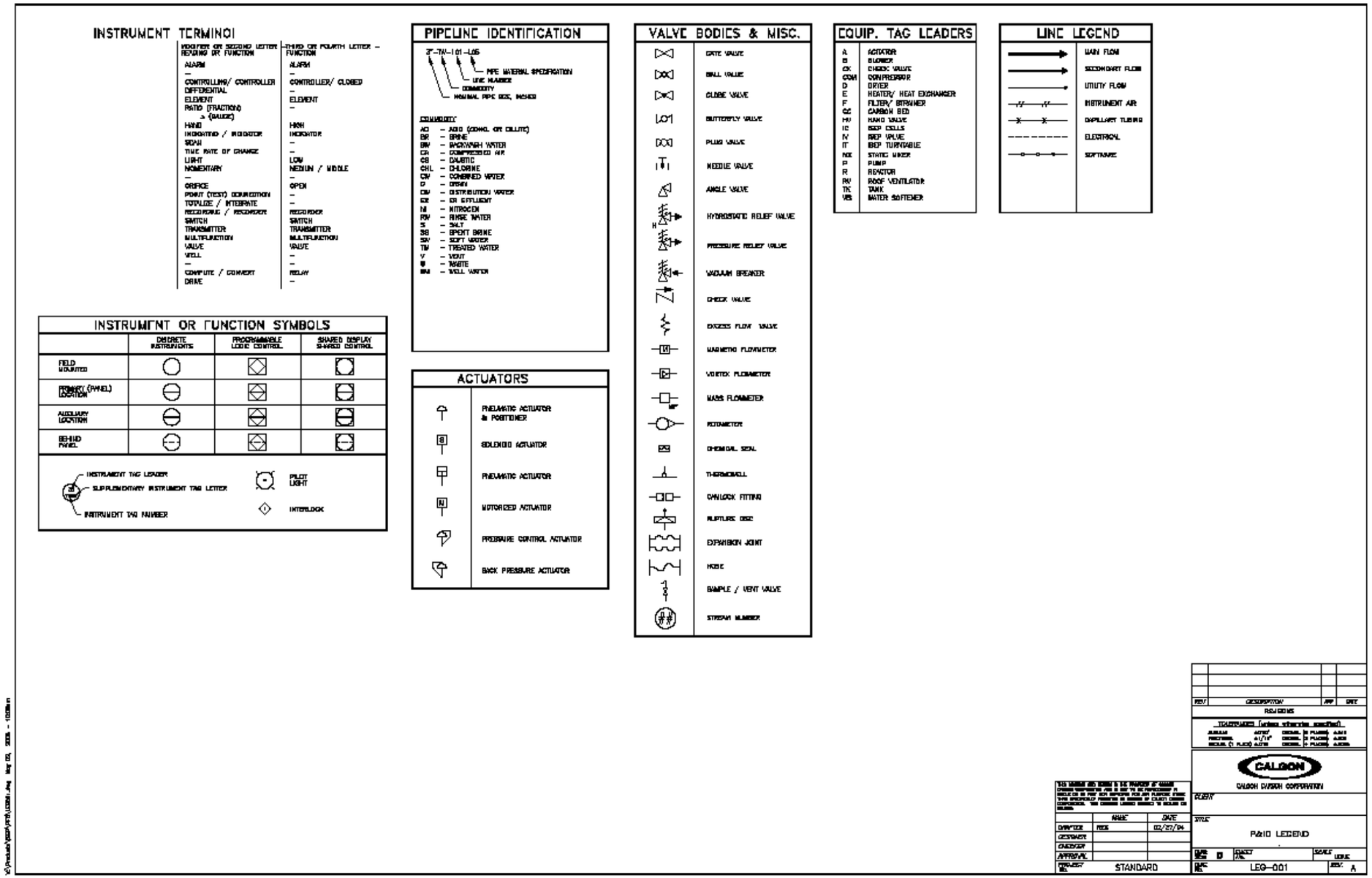

Figure 5-2. Key for Revised Flow Diagram of Regeneration, Rinse, and Destruction Systems Showing Sampling Points

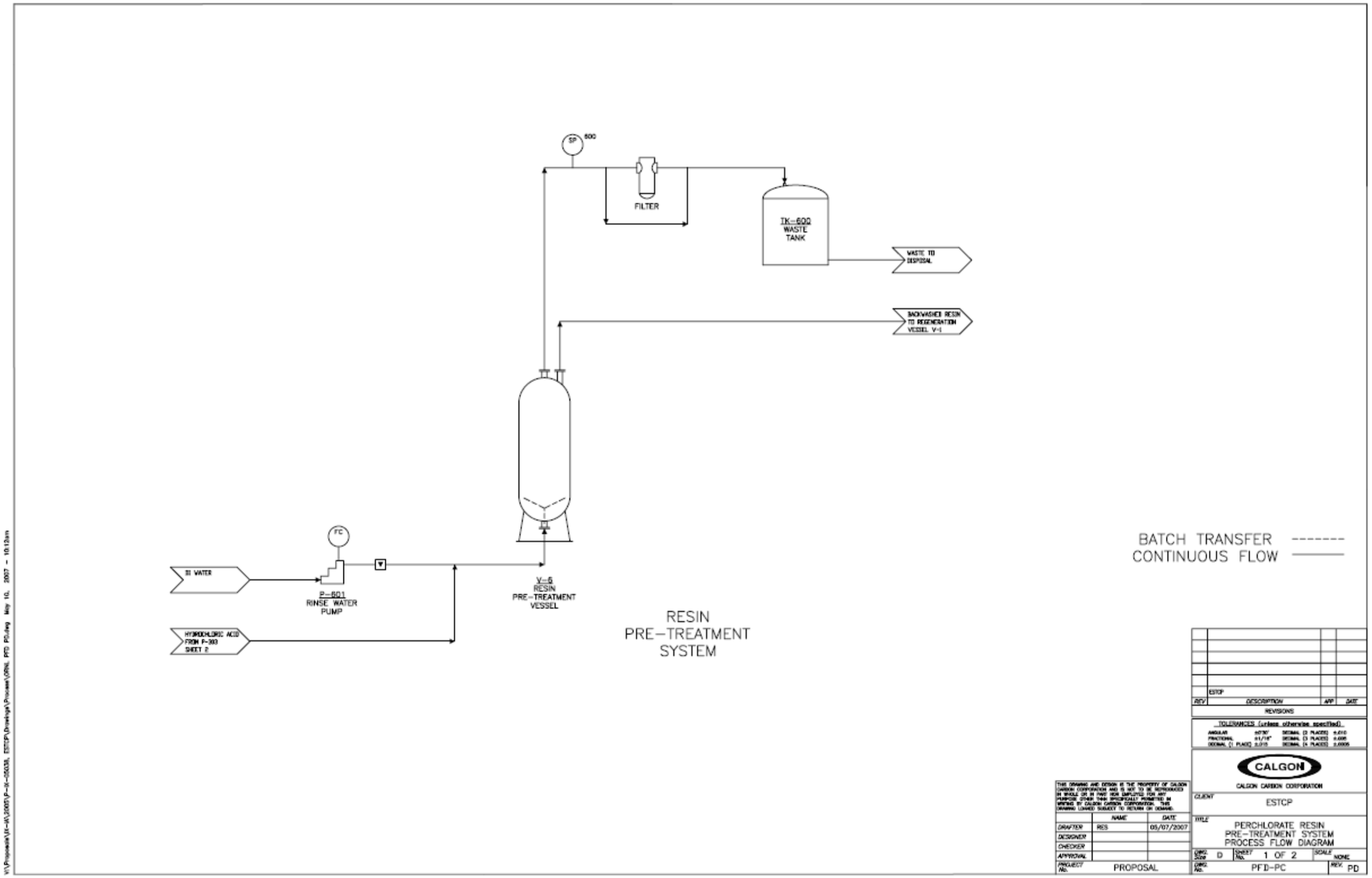

Figure 5-3. Resin Pre-treatment System

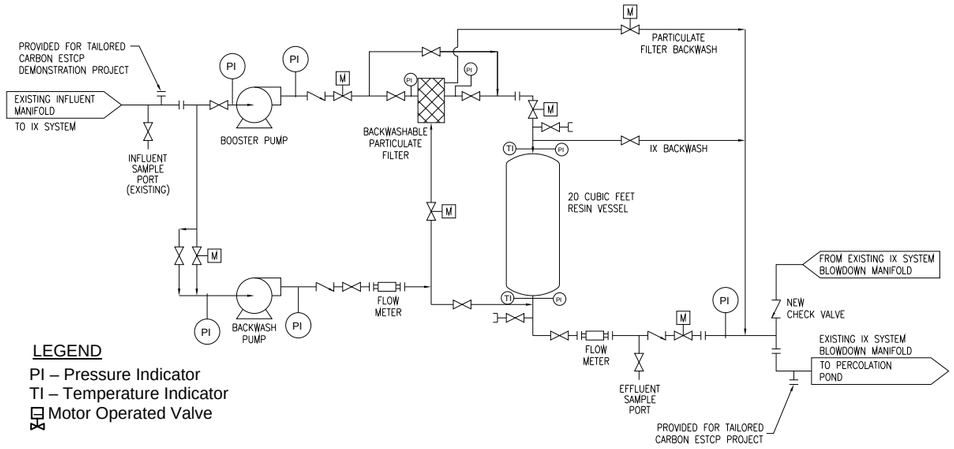

Figure 5-4. Process Schematic Ion Exchange at FWC

5.1.2 Experimental Design – IX Unit Process

5.1.2.1 Literature Review Regarding Critical Design and Operating Factors for IX

The performance of this resin (now sold as Purolite A-530E, but also known as D-3696 or BiQuat (Gu et al., 1999) in earlier publications) has been studied in laboratory studies and full-scale as described in Section 2.2.1. The laboratory testing has included several critical design/operating factors: breakthrough curves at a variety of times and conditions (Gu et al., 1999, Gu et al., 2005), various levels of other anions such as sulfate (Gu et al., 2005) and various flow rates (GPM/cubic ft or BV/min. Boodoo. 2003). Field scale results from Redlands California (Gu et al., 1999) Aerojet, Edwards AFB (Gu et al., 2000a; Gu et al., 2002a) and Paducah site (Gu et al., 2000b) have been published. During the Edwards AFB pilot test, clogging with iron oxyhydroxides and biomass was a significant problem that can be overcome with pre-filtration. This fouling caused breakthrough to occur in the field before it was predicted to occur from bench-scale observations (Gu et al., 2002a). Purolite claims to have proprietary modeling software that can be used in feasibility analysis for these resins for the following purposes (http://www.purolite.biz/Perchlorate_Facts_for_Vendors_ 090203.pdf):

- Estimate and compare expected treatment cost for a variety of resins
- Perform sensitivity analyses for anticipated changes in water quality
- Evaluate changes that will occur to competing anions during service (e.g., nitrate and sulfate)
- Assess the simultaneous loading of other trace anions that may be present in the water (e.g., uranium, chrome-6, arsenic, selenium, etc.) for any peaking potential above MCLs
- Use output data to optimize equipment sizing and frequency of resin change-outs (in the case of disposable resins)
- Use output data to compare brine and proprietary regeneration options

A publicly published similar model of an IX process is the Michigan Adsorption Design and Applications Model (MADAM) (Weber and Thaler, 1983; Weber and Crittenden, 1975). The IX for this model is based on mass transfer, equilibrium and thermodynamic considerations and has been used to successfully predict breakthrough curves in at least simple situations.

5.1.2.2 FWC Demonstration Experimental Design – IX Unit Process

At most full-scale sites, it is anticipated that resin beds will be able to operate at least one year between changes and that the resin will be reusable for six to eight regeneration cycles. Therefore, the resin life is likely to be six to eight years of active service. Given the relatively short time available for this demonstration program, we conducted the demonstration using a higher ratio of flow rate-to-bed-volume than would normally be used at full-scale, so that breakthrough would be achieved more rapidly than at full-scale.

For the demonstration, a 36" x 72" (0.9m x 1.8 m) IX vessel was installed upstream of any treatment at the host site for the IX of perchlorate. The vessel contained 20 ft^3 (0.6 m^3) of Purolite A-530E perchlorate-selective resin (as manufactured). The vessel typically operated at ~60 BV/hr (150 GPM [0.6 m^3/min]) and required three to five months to complete saturation. Upon saturation, the resin was removed from the vessel and shipped back to the central Calgon facility in Pittsburgh for regeneration and perchlorate destruction. Parameters monitored in the influent and effluent are listed in Table 5-1. These measurements permitted an accurate calculation of the perchlorate load on the resin, which provided a basis for mass balance calculations in later steps. After the regeneration was accomplished the resin was returned to the site and placed back in service. Further testing of the regenerated resin is described below.

Table 5-1. Demonstration: Analytical Matrix – As Originally Planned

Only actual samples listed, 30 percent additional samples allocated for QA/QC as detailed in QAPP

Analyte	Method (EPA unless otherwise cited)	Explanation	Analytical Instrument Used	Detection Limit	Reporting Limit	Major Interferences (Listed only for Critical Parameters)
Perchlorate	314	12 months, 4 samples per month, 2 locations within the IX adsorption system; additionally 8 samples per regeneration cycle (including prewash and rinse), 4 regeneration cycles[3]; 4 samples per perchlorate destruction unit run, 10 runs of destruction	IC	0.63 µg/L	2.0 µg/L	High mineral content or hardness; high concs. of common anions such as chloride, sulfate, and carbonate
Perchlorate	331.0 or 332.0	10 to 20 for confirmation of primary method	LC-MS/MS or IC-MS/MS			None
Nitrate	300.0	12 months, 4 samples per month, 2 locations within the IE adsorption system; additionally 8 samples per regeneration cycle (including prewash and rinse), 4 regeneration cycles; 4 samples	IC	0.097 mg/L	0.50 mg/L	Coelution by carbonate and other small organic anions; large amounts of acetate

[3] It is likely that only four regeneration cycles will occur in the one year operations timeframe.

Analyte	Method (EPA unless otherwise cited)	Explanation	Analytical Instrument Used	Detection Limit	Reporting Limit	Major Interferences (Listed only for Critical Parameters)
		per perchlorate destruction unit run, 10 runs of destruction				
Sulfate	300.0	Same as above	IC	0.14 mg/L	0.75 mg/L	-
pH	SM4500H	Same as above	Electro-metric	-	-	-
TDS	SM2540C	Same as above	Gravimetric	4 mg/L	10 mg/L	-
TOC	SM5310C	Same as above	UV-Persulfate	0.013 mg/L	0.3 mg/L	-
Chloride	300.0	12 months, 2 samples per month, 2 locations for IE adsorption system, in addition 5 samples per regeneration run (including prewash and rinse), 4 regeneration cycles; 2 samples per destruction unit run, 10 runs of destruction	IC	0.05 mg/L	0.5 mg/L	-
Fluoride	300.0	Same as above	IC	0.022 mg/L	0.1 mg/L	-
Title 22 Metals (Al, Sb, As, Ba, Be, Cd, Cr, Pb, Hg, Mo, Ni, Se, Ag,Tl, B, V, Zn), plus Ta in regenerant before and after recycling Plus Major Cations (Na, Ca, K)	200.7	12 months of operation, 1 sample per month of operation, 2 locations for IE adsorption system; additionally 3 samples per regeneration cycle (including prewash and rinse), 4 regeneration cycles; plus 2 samples per destruction run, 10 runs of destruction	ICP-AES / ICP-MS	See Appendix C	See Appendix C	-
Dissolved Fe	200.7	Same as above	ICP-AES	0.0048 mg/l.	0.02 mg/L	-
Dissolved Mn	200.7/200.8	Same as above	ICP-AES / ICP-MS	0.0048 mg/l	0.01 mg/L	-
Gross Alpha*	900.0	Same as above		-	1 pCi/L	-
Dissolved U	200.7/200.8	Same as above	ICP-AES / ICP-MS	0.015 µg/L	0.20 µg/L	Changes in viscosity and surface tension, especially in samples with high dissolved solids or high acid concs. / High dissolved solids - ≤

Analyte	Method (EPA unless otherwise cited)	Explanation	Analytical Instrument Used	Detection Limit	Reporting Limit	Major Interferences (Listed only for Critical Parameters)
						0.2% (w/v) recommended
Total Fe	200.7	Same as above	ICP-AES	0.012 mg/L	0.02 mg/L	-
Total Mn	200.7/200.8	Same as above	ICP-AES	0.0012 mg/L	0.010 mg/L	-
Total As	200.7/200.8	Same as above	ICP-MS	0.066 µg/L	0.40 µg/L	-
Total U	200.8	Same as above	ICP-MS	0.015 µg/L	0.20 µg/L	High dissolved solids - ≤ 0.2% (w/v) recommended
Volatile Organic Carbon (VOC)	524.2	12 months of operation, 1 sample per month, 2 locations for IE adsorption system; additionally 4 samples per regeneration cycle (including prewash and rinse), 4 regeneration cycles; 2 samples per perchlorate destruction run, 10 runs of perchlorate destruction	GC/MS	See Appendix C	See Appendix C	-
Semi-VOC (SVOC) and N/P Pesticides	525.2	Same as above	GC/MS	See Appendix C	See Appendix C	-
NDMA, NDEA, and NDPA	1625M or 521	12 months, 2 samples per month, 2 locations for IE adsorption system, plus 5 samples from each of 2 simulated distribution system tests (described in Section 3.6.6.2.2), additionally 5 samples per regeneration cycle (including prewash and rinse), 4 regeneration cycles; 2 samples per destruction run, 10 destruction runs	GC/MS or GC/MS/MS	0.50 ng/L	2.0 ng/L	Interferences coextracted from samples vary considerably and from source to source
Radon	SM7500-Rn or EPA 913.0	12 months of operation, 1 sample per month, 2 locations for IE adsorption system; plus 4 samples per regeneration run	Liquid scintillation	-	10 pCi/L	-

Analyte	Method (EPA unless otherwise cited)	Explanation	Analytical Instrument Used	Detection Limit	Reporting Limit	Major Interferences (Listed only for Critical Parameters)
		(including prewash and rinse), 4 regeneration cycles; 2 samples per perchlorate destruction run, 10 runs of perchlorate destruction				

In typical one-pass IX perchlorate treatment systems, the IX vessels are configured in a lead-lag configuration. The systems are run until the IX resin in the lead vessel is saturated with perchlorate (i.e., when the perchlorate concentration in the lead vessel effluent equals the influent perchlorate concentration). During the time between initial breakthrough of the lead bed and saturation of the lead bed the lag bed is providing treatment. Once saturation is nearly reached, the resin in the lead vessel is removed, transported off-site for incineration, and fresh resin is installed into the vessel which is then placed into service as the new lag vessel (the partially-saturated resin in the former lag vessel becomes the new lead vessel). This vessel configuration and operation is accepted by the DPH for use in drinking water applications.

Alternately, if the proposed technology is deemed to be an acceptable drinking water treatment technology, it may be possible in some jurisdictions to have only one IX vessel that operates to a pre-determined effluent (breakthrough) perchlorate concentration (e.g., 10 percent of the influent perchlorate concentration, or 90 percent of the regulatory limit, etc.). Once this effluent concentration is reached, the partially-saturated IX resin would be removed from the vessel, fresh or regenerated resin would be installed into the vessel, and the "spent" resin would be sent to a regional regeneration facility to be regenerated and stored pending reuse. Thus it was important to measure both the time to breakthrough and the time to saturation during this demonstration.

The focus of our experimental design for IX was on comparing the performance of fresh or "virgin" resin to regenerated resin, and then to resin regenerated with recycled regenerant. We performed four cycles of IX (three regenerations) with the same lot of resin. Therefore, a primary emphasis was observing the performance of the resin (time to breakthrough and perchlorate capacity) over multiple regeneration cycles. This, in turn, supports an estimate of how many regeneration cycles a given resin can endure. Since the resin cost is a significant factor in the overall treatment cost, determining the regenerative ability of the resin is the key.

We also observed the system for the potential that organics could leach off of the resin material, including N-Nitrosamines or their precursors. Most of the NDMA stems from the resin manufacturing process and was expected to be minimized by reuse. Unlike other IX resins, bi-functional resins do not contain trimethylammonium functional groups, so it was thought highly unlikely that our treatment process would generate any NDMA. However, we monitored N-Nitrosamines throughout the treatment period and discuss detections in this report.

Iron oxyhydroxide and/or biomass buildup on the bed can decrease the effectiveness of the system and regeneration; however, simple, commonly applied pre-filtration (i.e., 10 micron [3.9 x 10^{-4} in]) reduces this buildup. Field-scale flow rates were monitored to evaluate this potential problem. The project utilized a backwashable pre-filter so we did not observe any buildup, increased pressure drop across the IX vessel (or subsequent loss of flow rate).

Since according to Purolite the resin is manufactured in batches of approximately 135 cubic feet (3.8 m^3), it was not possible to use the exact same batch as is used in the existing full-scale plant at FWC. Nor was it possible that the resin batch be the same as what has been tested in other regeneration and destruction tests at the bench and pilot-scales. We did, however, ensure that the technical specifications and model numbers of the resin batches were the same.

The definition of "N-Nitrosamines precursors" is uncertain, and the IX will occur upstream of the disinfection (chlorination) system at FWC. Therefore to assess the potential for N-Nitrosamines and volatile organic carbon (VOC) generation following disinfection, ARCADIS conducted simulated distribution system (SDS) testing to determine the extent to which disinfection byproducts could be formed using effluent from the IX system while dosing it with free chlorine. Methods used in this test are discussed in Section 5.3.1 and results in Section 5.7.4

5.1.3 Experimental Design – Regeneration Unit Process

5.1.3.1 Literature Review Regarding Critical Design and Operating Factors for Ferric Chloride Regeneration

Ferric Chloride regeneration of the resin was demonstrated at the bench-scale (Gu et al., 2001) using resins loaded at the Aerojet site and in the lab. Among the critical design and operating factors examined were the kinetics of the regeneration process (perchlorate desorbed vs. time), number of bed volumes required for regeneration, and elution curves with fresh and regenerated resin (recovery of IX capacity). This treatment system was targeted at a high influent concentration (at ~250 µg/L perchlorate).

Data on many of the same regeneration design and operating factors that were tested in this demonstration is publicly available for a second source water – Edwards AFB at pilot and bench-scale (Gu et al., 2002a; Gu et al., 2003b). Edwards AFB has a 450 µg/L perchlorate influent (roughly 50 times higher than we encountered at FWC). Chloride concentrations are 20-30 times higher, and sulfate concentrations are 10 times higher at Edwards AFB than at FWC. Nitrate concentrations, however, are substantially higher at FWC than at Edwards. (Note that FWC blends various waters for nitrate control, has recently readjusted well packers for this purpose, and uses on-line nitrate sensors to provide real-time feedback and system shutdown on nitrate concentrations exceeding a set-point).

Bench-scale results have demonstrated that the resin breakthrough curves are essentially equivalent after seven regeneration cycles (Gu et al., 2004b; Gu et al., 2003b; Gu et al., 2001; Smith, 2003). For the scale-up of the regeneration vessel, the two most important factors to match (and optimize) are the regeneration solution's linear velocity and regeneration vessel length to diameter (L/D) ratio. A computer model (IDEAS) has been developed in the mining

industry to predict the performance of regenerable IX systems with multiple elution solutions during scale-up (Nikkah, undated). Another publicly available numerical model of regenerable IX systems is Computer Aided Design for Ion Exchange (CADIX) (http://www.dow.com/liquidseps/design/cadix.htm). Gu (2005) showed that a rinse with dilute HCl could remove 75% of the uranium from the resin bed but only 0.1% of the perchlorate. Recent, unpublished Calgon tests have shown the benefits of the prewash and rinse additive modifications to the regeneration process. These rinse sequences are discussed further in Sections 5.5.3, 5.7.2, 6.20 and 6.11 of this report.

5.1.3.2 FWC Demonstration Experimental Design – Ferric Chloride Regeneration

During the FWC project, we determined the number of bed volumes required for regeneration through the examination of the regeneration elution curve. We also examined the required readjustment of the regenerant following recycling to attain rebalance, the buildup of impurities in the regenerant solution and the required purge rate of the regenerant.

We demonstrated the performance of the regeneration process at the 20 ft^3 (0.6 m^3) regeneration vessel scale. The regenerations were performed in Pittsburgh using resin that was saturated with perchlorate in FWC. Prior to moving the resin from the loading/shipping vessel into the regeneration vessel the resin was washed with a dilute acid solution that was routed to disposal. This rinse was expected to remove uranium but was not expected to remove substantial perchlorate.

The regeneration itself was performed in vessel V-1 as shown in Figure 5-1. We sampled the spent regenerant during regeneration and frequently analyzed the samples for the following limited parameter list – perchlorate, nitrate, sulfate, iron, chloride, and pH. Other parameters were analyzed at the frequencies given in Table 5-1. This allowed a perchlorate mass balance to be calculated.

During this demonstration, we documented impurity accumulation. Despite the resin's selectivity, small concentrations of other anions, beside perchlorate, were exchanged onto the resin, including nitrate, sulfate, and bicarbonate. In addition, other typical groundwater constituents including hardness, organic matter, and particulate matter, could be accumulated to varying degrees on or in the resin through physical and/or chemical processes. The prewash step was intended to minimize the buildup of these impurities in the regeneration loop. By analyzing for these and other impurities during the IX demonstration and regeneration demonstration (in regeneration solutions) their elution/buildup during both IX and regeneration could be described. This allows for the determination of the volume of regenerant purge necessary to control the impurity levels in the regenerant loop. We did not however conduct any impurity analysis of the solid phase resins.

Uranium (as $U_3O_8^-$) is captured by all anion IX systems to some extent. Uranium is responsible for approximately 80 percent of the aqueous gross alpha radiation in Fontana groundwater. As EPA has noted:

"Treating water to remove naturally occurring radioactive material (NORM) results in residual streams that are classified as "technologically enhanced naturally occurring radioactive materials," or TENORM. TENORM is defined as naturally occurring materials, such as rocks, minerals, soils, and water, whose radionuclide concentrations or potential for exposure to humans or the environment is enhanced as a result of human activities (e.g., water treatment). Numerous regulations govern the disposal of waste streams containing radionuclides (although there are no federal waste disposal regulations specifically for TENORM wastes), and their interaction is complex. States and disposal facilities can place additional restrictions on TENORM disposal. Liquid and solid residuals classified as TENORM may contain nonexempt levels of radioactive material."
http://www.epa.gov/nrmrl/wswrd/dw/smallsystems/residuals.html

However, bi-functional resins are less sensitive than many other resins to uranium accumulation because they are designed to reject multi-charged anions, such as sulfate and uranyl carbonates, with relatively high hydration energies (DTSC, 2004; Nyer 2001; Gu et al., 2005). More importantly, the sorbed uranium on bi-functional resin can be easily rinsed off with a dilute acid solution without substantially desorbing the perchlorate, and mixed waste issues should thus be avoided (Gu et al., 2005). Finally, as noted below, uranium accumulation in the regenerant stream can be managed through a small percentage purge. Uranium monitoring was conducted for the loading, regeneration and destruction streams to allow us to evaluate the significance of this issue.

We also included prewash and rinse water treatment and/or disposal within the demonstration. After the regenerant was used, dilute acid, rinse water and in some cases an aqueous solution of a common, nontoxic inorganic base was utilized to remove the tetrachloroferrate ion that occupies the IX sites on the resin. The rinse waste reaches a very low pH because of the 4 M HCl of the regenerant and requires neutralization prior to disposal. However, if the process is properly managed, the rinse should contain minimal perchlorate (Edwards AFB data supports this conclusion). The rinse waste management technical and cost elements have had relatively little study in the other pilot demonstrations. Although some of these rinses could be disposed to municipal wastewater systems with proper pretreatment and/or permitting, offsite disposal was used in this study.

While 20 BVs of rinse water and/or dilute acid has been suggested as the requirement to remove the regenerant from the resin bed after regeneration, a more detailed effort was undertaken during this project to gather data that could be used to optimize this parameter. The key effluent parameters of perchlorate, and iron were plotted versus BVs of rinse to determine the minimum required volume of rinse water to allow for re-installation of the resin while meeting the water quality requirements.

5.1.4 Experimental Design – Destruction Unit Process

5.1.4.1 Literature Review regarding Critical Design and Operating Factors for Perchlorate Destruction Unit Process

The perchlorate destruction unit process has had the least testing of the three unit processes in this integrated system. However, perchlorate destruction testing has been performed at the laboratory scale (both bench and flow reactors) using regenerant from resin used for perchlorate treatment at Edwards AFB in California (Gu et al., 2003b). The reaction rate was determined to be pseudo first-order in perchlorate based on the assumption that protons were in large excess and ferrous iron was relatively constant. The rate constant was determined over a range of temperatures and iron concentrations by observing concentration vs. time profiles over several hours. The rate constant in batch reactors was determined at four temperatures between 110 and 195 °C (230 and 383 °F) at two different iron concentrations (Table 5-2). At 195 °C (383 °F) the reaction was essentially complete in 1 hour, while at 170 °C (338 °F) the reaction was essentially complete in 3 hours. The flow-through testing was conducted at flow rates from 5.2 to 24 mLs/hour (0.03 to 0.21 GPD), with temperatures from 140-170 °C (284-338 °F), pressures from 160-310 psi (1,100-2,140 kPa) and residence times between 1.5 and 6.9 hours (Table 5-3). A substantially larger reactor (37 GPD [0.14 m^3/day]) was then constructed at Calgon's Pittsburgh facility, which was used for the testing for the FWC project.

Table 5-2. Estimated First Order Rate Constants (*k*) for Reduction of Perchlorate at Low and High Fe (II) Concentrations in $FeCl_3$-HCl Regenerant Solution at Varying Temperatures[a] (Reprinted from Gu 2003a)

Temp. (°C/°F)	Low Fe(II)		High Fe(II)	
	k **(h^{-1})**	**R***	***k*** **(h^{-1})**	**R**
110/230	0.002	0.963	0.005	0.996
140/284	0.036	0.970	0.194	0.998
170/338	0.573	0.944	1.393	0.992
195/383	1.431	0.952	5.233	0.998

[a] *R* is the linear regression coefficient for plots of $\ln(C/C_0)$ against reaction time (h)
Reprinted from (Gu 2003a)

Table 5-3. Degradation of Perchlorate in a Flow-Through Reactor at Various Flow Rates, Temperatures, and Pressures[a] (Reprinted from Gu 2003a)

Flow (mL/h)	Res. Time (h)	Temp. (°C/°F)	Pressure (PSI)	Effluent ClO_4^- (mmol/L)[b]	ClO_4^- Degraded (%)
5.2	6.9	140/284	200–220	4.3 ± 0.2	95.3
12.0	3.0	170/338	230–260	1.9 ± 0.2	97.9
5.2	6.9	170/338	160–170	0.2 ± 0.1	99.8
18.0	2.0	170/338	290–310	1.7 ± 0.1	98.2
24.0	1.5	170/338	260–280	3.5 ± 0.2	96.1

[a] Constant flow rate was achieved using an inert HPLC pump, and the backpressure at the effluent exit was controlled arbitrarily using HPLC Peek tubes with different internal diameters and lengths. The initial influent concentration was ~90 mmol/L ClO_4^-.
[b] Stable effluent ClO_4^- concentrations were measured after ~100 mL of the influent ClO_4^- solution (or ~3 times the reactor volume) had passed through the reactor at a given temperature and pressure.

Reprinted from (Gu 2003a)

5.1.4.2 FWC Demonstration Experimental Design – Perchlorate Destruction Unit Process

To evaluate perchlorate destruction module performance and scalability, the tantalum destruction module was operated at a range of conditions, as tabulated in the results section:

- Flow rates generally between 20-63 mls/min (0.32 to 1 gallons per hour). Intermittent higher readings were observed but likely reflect flow rate variation due to gas bubble buildup in the system.
- Temperatures between 169 and 190 °C (336 and 374 °F)
- Pressure held relatively constant at 150-250 psi (1,034-1,723 kPa) (intended to hold the fluid in the liquid state).

The 1 GPH (0.09 m^3/day) scale represents an approximate 400-fold increase over a bench-scale perchlorate destruction flow through unit used in the laboratory (Gu et al., 2003a). The ability to scale-up the reactor further can be determined based on both theoretical analysis and actual experience. The scalability of the kinetics of this plug flow reactor were verified by comparing the effluent perchlorate concentration (and thus kinetic rate constant) observed with the larger scale destruction module tested during this program versus what would have been predicted from previous smaller-scale destruction efforts.

The purpose of the perchlorate destruction module is the oxidation of the ferrous ion and the corresponding reduction of the perchlorate ion to chloride. While laboratory studies show > 99 percent removal for the perchlorate destruction reaction, the effect that impurities common in drinking water supplies may have on this process had not been fully evaluated. The Gu work (2003a) used regenerant from Edwards AFB resin (and this water has much different ratios of other ions to perchlorate, as discussed in Section 5.1.3.1). This project demonstrated the perchlorate destruction performance of the technology with regenerant solution from a second site that has a variety of anticipated impurities including nitrate, sulfate, calcium, magnesium, and other contaminants.

5.2 BASELINE CHARACTERIZATION

This demonstration project was conducted on groundwater that was pumped from a perchlorate-impacted aquifer that is contaminated on a regional-scale (see Section 4). The perchlorate plume is a very large plume that affects the region where the demonstration was conducted, and the production wells have a high yield, thus the local demonstration site cannot be feasibly characterized using the same tools as a remediation project. In the previous section however, the physical elements of the demonstration site were described—two groundwater extraction wells, perchlorate treatment system, distribution reservoir, percolation pond—as well as the location of

the site. The demonstration site can be described as a reasonably "typical" example of a site where a drinking water perchlorate treatment system might be located. Although the baseline perchlorate concentration only modestly exceeds California's 6 µg/L MCL, such sites often receive active treatment. The chemistry of the groundwater that was used in the demonstration is typical of groundwater that is treated in the California Inland Empire, however, the average perchlorate concentration is slightly lower, and the average nitrate concentration is slightly higher than at other perchlorate treatment systems in the area.

For the purposes of this project, the baseline was defined as the untreated water as pumped, during routine operation from wells FWC-17B and/or FWC-17C. Which wells were operated at which times were controlled by the needs of the FWC and its customers. As shown in Figures 4-3, 4-4 and 4-5 history shows there is some variability in the concentrations of nitrate and perchlorate in these wells, which is likely a function of regional hydrogeology and the pumping rate and well packer depth adjustments made to these supply wells. A statistical analysis of the influent concentration during the demonstration is presented in Table 5-4.

Table 5-4. Influent Perchlorate Concentration Statistical Analysis

Mean	7.97
Standard Error	0.14
Median	7.7
Standard Deviation	1.26
Minimum	5.0
Maximum	11.0
Count	82

During the demonstration itself, influent water quality was routinely monitored by ARCADIS using the same methods used for effluent quality as discussed in Section 5.6.

5.3 TREATABILITY OR LABORATORY STUDY RESULTS

The primary technologies being tested did not undergo any treatability or laboratory studies specific to this demonstration site. However a simulated distribution system test was undertaken.

5.3.1 IX Simulated Distribution System Analysis

ARCADIS conducted simulated distribution system (SDS) testing on the IX system effluent on two occasions to determine the potential for disinfection byproduct generation following IX and disinfection.

For the first SDS testing event, the ARCADIS Durham, North Carolina Treatability Laboratory received three 2.5 gallon containers of IX effluent (IX-EFF-07-09-26) on 9/28/07. For the second

SDS testing event, three additional 2.5 gallons containers of IX effluent (IX-EFF-08-07-31) were received on August 1, 2008. For each test, the received effluent was consolidated into one container from which five tests were prepared, each in 4-L amber jugs with Teflon lined caps that were filled to zero headspace. Bleach dosing and incubation time is shown in Table 5-5. All samples were incubated in the dark at 21 ºC (70 ºF) for the duration of their incubation period.

Table 5-5. Simulated Distribution System Test Matrix (Performed on Two Occasions)

SDS Sample Name	Bleach Dose	Incubation Period	Description
SDS-IX-24hr-1	1.25 mg/L	24 hours	Chlorinated 24 hour
SDS-IX-24hr-2	1.25 mg/L	24 hours	Chlorinated 24 hour duplicate
SDS-IX-7D-1	1.25 mg/L	7 days	Chlorinated 7 day
SDS-IX-7D-2	1.25 mg/L	7 days	Chlorinated 7 day duplicate
SDS-IX-7D-C	0	7 days	Control

During the course of the first testing event's incubation period the 4-L amber jugs showed a propensity to fracture due to expansion of water with temperature in zero headspace jugs. The fractured jugs did not break outright until their lids were removed to collect samples for the analysis being conducted. Sample SDS-IX-24hr-2 fractured and the resulting water loss prevented complete filling of a sample for N-Nitrosamine analysis and the collection of a residual free chlorine sample (in the data summary tables this is indicated by 'lost sample'). Sample SDS-IX-7D-C was also found to be fractured. Upon opening, the jar fractured in a manner that its entire contents were lost for analytical analysis. Therefore, this sample was repeated using the same consolidated effluent sample (IX-EFF-07-09-26) and following identical test conditions as the previous 7 day samples.

At the end of the test incubation all samples were analyzed for the following depending on available sample volume:

By the ARCADIS Durham Treatability Lab for:

- Free chlorine by HACH DPD Free Chlorine test program #9

By Weck Laboratories for:

- TOX (Total Organic Halides) by Method SM5320B
- HAAs (Haloacetics acids 6 compounds + HAA5) by EPA Method 552.2
- THMs (Trihalomethane) by EPA Method 524.2
- Nitrosamines (including NDMA, NDEA, NDPA) by EPA method 521.

Results of the simulated distribution test are reported in Section 5.7.4.

5.4 DESIGN AND LAYOUT OF TECHNOLOGY COMPONENTS

5.4.1 Overview of Design and Layout

The field-scale demonstration included testing on an IIX system (Figure 5-5) that was operated between 150 and 175 GPM. The demonstration system was designed by ARCADIS and Calgon, and was operated at FWC wells, FWC-17B and FWC-17C because the wells delivered an adequate supply of water and the site could accommodate the discharge flow rate of the system in the on-site, NPDES-permitted percolation pond.

5.4.2 FWC Demonstration Experimental Design – Ion Exchange Unit Process

At full-scale perchlorate treatment sites that utilize this regenerable IX technology, it is anticipated that the majority of resin beds will be able to operate for approximately one year between resin regenerations and that the resin will be reusable for six (6) to eight (8) load/regeneration cycles. Given the relatively short duration of this demonstration and the need for multiple load/regeneration cycles (four load cycles and three regeneration cycles), the demonstration was conducted at a higher ratio of flow rate-to-bed volume than would normally be used at full-scale, so that perchlorate breakthrough would be achieved more rapidly than at full-scale perchlorate systems and the demonstration could be completed in a reasonable time period. This was accomplished by reducing the volume of resin while maintaining a face velocity typical of commercial operation to maintain a comparable mass transfer zone and breakthrough profile. Other IX treatment systems in Southern California commonly operate at a flow rate-to-bed volume ratio between 2.4 GPM per cubic foot (GPM/Ft^3) of resin and 5.4 GPM/Ft^3 (Calgon Carbon Corporation, personal conversation with Charles Drewry), while the demonstration system operated between 7.5 GPM/Ft^3 at 150 GPM and 8.8 GPM/Ft^3 at 175 GPM. Given the relatively short mass transfer zone of IX, the increased flow rate-to-bed volume ratio was not expected to affect system performance.

Another significant difference between the demonstration scale system and the anticipated full-scale application of the IIX technology was the use of only one batch of resin. In a full-scale system multiple batches of IX resin would be used in multiple beds in either lead-lag or parallel configuration. When a batch of resin becomes exhausted it would be returned to a centralized treatment facility and would immediately be replaced with a fresh batch of regenerated or virgin resin. The exhausted resin would then be regenerated and returned to the facility long before it would be needed as a replacement. For this demonstration however, only one batch of resin was used and the system was shutdown while this batch was being regenerated. This experimental design was necessary to limit the cost and duration of the demonstration, and to allow the affects of multiple regenerations on a single resin batch to be studied.

The installed on-site demonstration system was comprised of a 36” x 72” (0.9m x 1.8 m) fiberglass reinforced plastic (FRP) IX vessel, an interconnecting piping manifold, process instrumentation (e.g., pressure gauges, flow meters, etc.), booster pump, pre-filter system, schedule 80 PVC pipe and fittings, and four-inch industrial, chemical-resistant rubber hoses that connected the IX vessel to the influent and effluent piping manifold. Piping was supported by steel slotted-hole C-channel (i.e., unistrut). The vessel contained approximately 20 ft^3 (0.6 m^3 of

Purolite A-530E perchlorate-selective resin (as manufactured). The vessel was operated at an average flow rate of approximately 66 BV/hour (165 GPM), and took approximately three to four months before perchlorate saturation. Upon reaching perchlorate saturation, the resin was removed from the vessel and shipped back to Calgon's facility in Pittsburgh for regeneration and perchlorate destruction. The resin was regenerated three times during the demonstration.

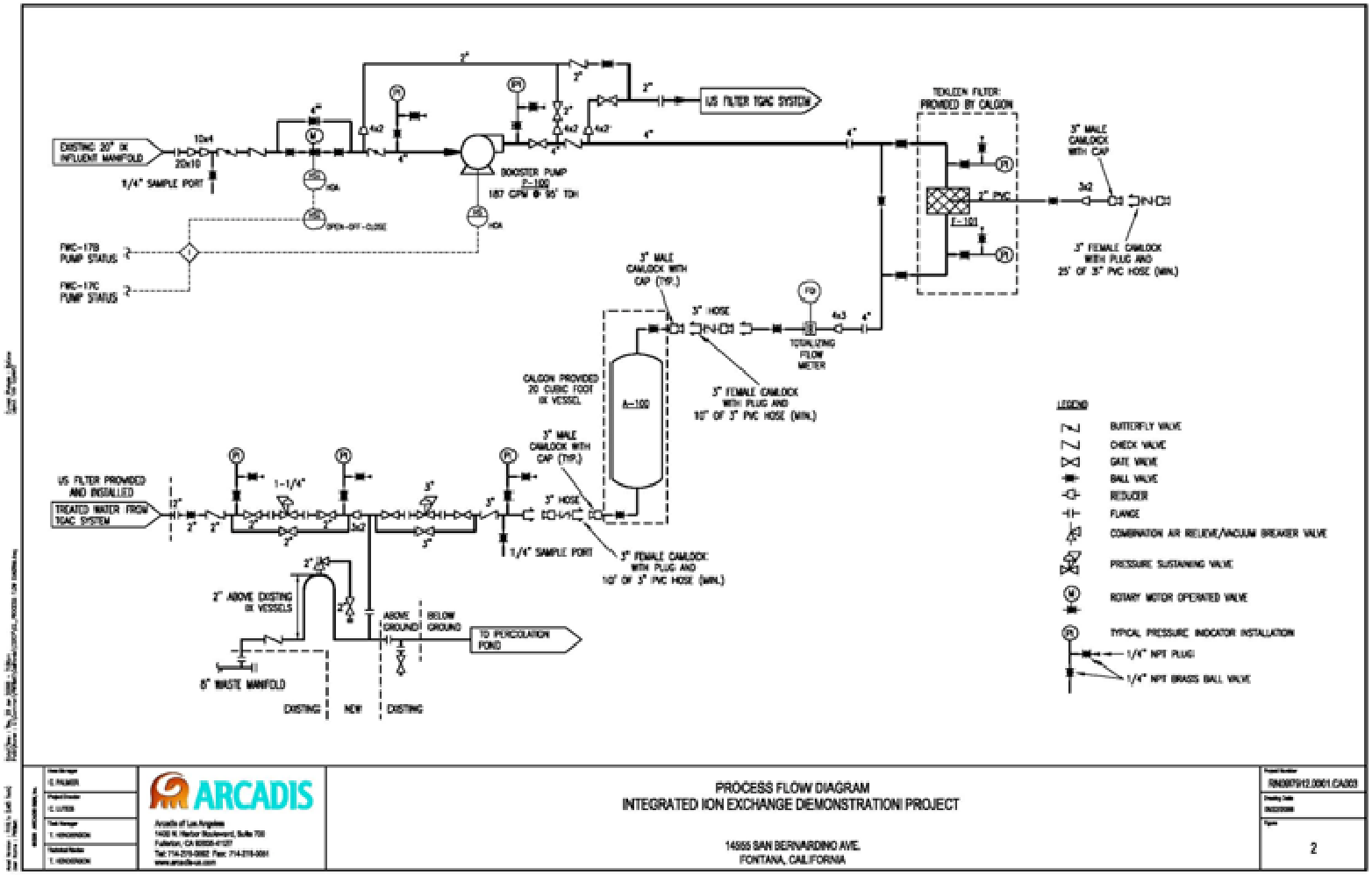

Figure 5-5. Process Flow Diagram, IIX Demonstration Project

The off-site regeneration system and perchlorate destruction module were fabricated and operated in Calgon's facility in Pittsburgh, and did not require any on-site setup for this demonstration.

The existing, full-scale perchlorate treatment system at FWC does not utilize pre-filtration, and particulate accumulation on their resin is minimal; however, most full-scale perchlorate treatment systems in Southern California do utilize pre-filtration. The demonstration system was equipped with a pre-filtration system—a Tekleen Model LPF4-LP equipped with a Tekleen Model GB6-LPF automatic backwash controller that included a differential pressure switch to activate the backwash cycle. Towards the end of the demonstration, the pre-filter system was removed from service because it required repairs.

The demonstration system booster pump was used when one of the two FWC well pumps was operational (FWC turns off one, or both, of their well pumps during low-demand times or when high nitrate concentrations existed—FWC continuously monitored nitrate concentrations with on-line sensors). When both FWC well pumps were off the demonstration system was also off.

5.5 FIELD TESTING

5.5.1 Installation and Startup – FWC Operations

A concrete pad was installed at the FWC site to contain the demonstration system. The system components were anchored to the concrete pad. After the demonstration system was anchored, the following activities were completed:

- A system influent pipe (including associated valves, fittings, etc.) was installed from the existing full-scale perchlorate system influent manifold to the booster pump suction
- Piping was installed from the booster pump discharge to the pre-filter system, the pre-filter system to the demonstration system influent manifold, and from the demonstration system effluent manifold to the percolation pond discharge pipe
- Electrical conduit and wiring were installed from the electrical disconnect to the booster pump motor, pre-filter, and electric isolation valve
- A low pressure switch was installed in the FWC treatment system's influent manifold that acted as an interlock to start the demonstration system's booster pump (the booster pump was only started if the influent manifold reached a minimum pressure setpoints)
- Process controls, pressure gauges, and a flow meter were installed

Once the system was installed, the following activities were performed:

- The piping components were pressure tested to check for leaks.

- The battery-powered flow meter was checked for proper operation and calibrated with a bucket and stopwatch.
- The entire piping system was disinfected with chlorine. The disinfection process followed American Water Works Association (AWWA)-approved procedures.
- 20 Ft^3 (6.8 m^3) of resin was installed in the IX vessel.
- The resin was backwashed with potable site water. This procedure was repeated when fresh resin was reloaded. Some visible loss of resin occurred during each backwash step. Data Analysis corrected for this resin loss. Future applications should include a modified header to avoid this problem.

The system start-up entailed opening and closing process valves to allow groundwater to flow from the existing full-scale treatment system's influent manifold to the booster pump, pre-filter, demonstration IX vessel, and percolation pond. A flow rate of approximately 150 GPM (0.6 m^3/min) through the IX system was established during startup.

5.5.2 IX System Operations - FWC

The field-scale demonstration IX system operated between January 17, 2007 and December 11, 2008—approximately 474 operational days, treating over 110 million gallons or 1.00 million BVs of perchlorate-impacted groundwater during this period.

Groundwater was treated by the demonstration system until the resin was saturated with perchlorate, at which time the IX vessel (and resin) was shipped to Calgon's facility in Pittsburgh for resin regeneration and perchlorate destruction. Following resin regeneration, the IX resin was re-loaded into the IX vessel, returned to FWC, and resumed operation for another load/regenerate cycle. This cycle was repeated three times during the demonstration period. Thus the reason the system was only operated 474 days out of the 694 elapsed days is primarily as discussed above: only one batch of resin was used and the system was shut down while the batch was shipped across the country, regenerated and shipped back.

An average flow rate of 165 GPM was processed by the IX vessel throughout the entire demonstration. At startup and throughout the first load cycle, the target flow rate was 150 GPM. During the second cycle the target flow rate was increased to 160 GPM. The third and fourth cycles were operated at a target flow rate of 175 GPM. The target flow rate was increased to ensure that the desired number of cycles could be completed in a reasonable time period.

Due to atypical resin loss during backwashing, a result of the demonstration system header, and due to sampling, the volume of resin changed slightly through the demonstration. Field measurements of the volume of chloride exchanged resin were used to adjust the BV through the sequential loading cycles. During the first perchlorate loading cycle, 115 gallons of resin were in the treatment vessel and thus one bed volume was equal to 115 gallons. The volume of resin in the second, third, and fourth loading cycles was slightly less: 112, 107, and 107 gallons respectively and the calculation of bed volume was adjusted commensurately during those cycles

Initial perchlorate breakthrough during the first load cycle was observed at ~109,000 BVs. The vessel continued operating until perchlorate saturation (defined as an effluent perchlorate concentration of 90 percent, or more, of the influent perchlorate concentration) was observed at ~219,000 BVs. In June, 2007 the IX vessel was shipped to Calgon's Pittsburgh facility for resin regeneration and destruction. When the vessel arrived in Pittsburg, the piping coming off the bottom was discovered to have been broken in shipment. This was repaired and had no affect on the project other than a slight delay. The vessel was shipped back and the second load cycle was started on August 8, 2007.

Initial perchlorate breakthrough during the second load cycle was observed at ~131,000 BVs. The vessel continued operating until perchlorate saturation was observed at ~200,000 BVs. In December, 2007, the IX vessel was again shipped to Calgon's facility for resin regeneration and destruction. The vessel was shipped back to FWC and the third load cycle was started on January 2, 2008.

Initial perchlorate breakthrough during the third load cycle was observed at ~98,000 BVs. The vessel continued operating until perchlorate saturation was observed at ~230,000 BVs. The IX vessel was again shipped to Pittsburgh for resin regeneration in May 2008. The vessel was shipped back to FWC in July 2008, and the final load cycle was started on July 24, 2008.

Initial perchlorate breakthrough during the final load cycle was observed at ~110,000 BVs. The vessel continued operating until perchlorate saturation was observed at ~298,000 BVs.

During the demonstration, the system operated at 95 percent uptime efficiency (the designed downtime caused by using only one batch of resin was used for demonstration purposes, and is not included in this statistic). The majority of the demonstration system's downtime was not directly attributable to the demonstration system, but was mainly caused by shut downs of the larger FWC system which hosted the demonstration. The primary causes of downtime that were attributable to the IX demonstration system are summarized in Table 5-6. Note that even these shut downs are not particularly related to the media used, but rather to the bed hardware.

Table 5-6. Downtime Occurrences of the Demonstration System

Date	System Down-Time (Minutes)	Reason for System Down-Time
2/7/2007	68	Repaired two leaks on system pre-filter pressure gauge connections
8/20/2007	14,295	Major hose leak
9/26/2007	1,610	Ruptured 4" ball valve on IX bypass
9/28/2007	1,769	Ruptured 4" ball valve on IX bypass
1/14/2008	106	Shut down system to replace 1 1/2" plugs
11/21/2008	4,176	Broken 2" ball valve
11/25/2008	5,859	Broken 2" ball valve

The primary causes of downtime that were not related to the demonstration system included pumping interruptions of the supply wells, media change-outs on the site's full-scale treatment system, power failures, and routine and non-routine maintenance activities on the full-scale system. While the demonstration system was installed in parallel with FWC's full-scale treatment system (not in series) whenever the FWC system was down, the wells supplying both it and the demonstration system were shut off. The demonstration system was shut down during a FWC system IX resin change-out (1/26/07), FWC preventative maintenance (2/14/08), FWC telemetry system failure and repair (2/21/07 through 2/28/07), power failures (4/18/07 and 5/16/07), high nitrate concentrations (10/16/08 and 10/24/08), and FWC saturated resin and system shut off (12/11/08). Ignoring non-demonstration system related downtime, the overall uptime efficiency was 97 percent, the first load cycle uptime efficiency was 99.9 percent, the second load cycle uptime efficiency was 88.6%, the third load cycle uptime efficiency was 99.9 percent, and the fourth load cycle uptime efficiency was 95.0 percent.

Routine activities performed during O&M of the IX system included the following:

- Monitoring and recording of process data including pressures, flow rates, water and ambient air temperatures, and cumulative volume treated—performed by ARCADIS' personnel and FWC's California DPH (formerly California DHS)-certified water treatment system operators
- Obtaining influent and effluent water samples for process performance monitoring—performed by ARCADIS' personnel
- Preparing the IX vessel for shipment to Calgon—performed by ARCADIS' personnel
- Resin regeneration and perchlorate destruction —performed by Calgon
- Re-installing regenerated resin into the IX vessel and shipping vessel back to FWC—performed by Calgon
- Inspecting the system for water leaks and process upsets—performed by ARCADIS' personnel when on site (approximately weekly) and FWC personnel on a daily basis

5.5.3 Regeneration Operations – Pittsburgh

The sequence of regeneration unit processes is outlined in Table 5-7. A simplified process flow diagram of the system is provided as Figure 5-6. Detailed process diagrams for this system are given as Figures 5-1, 5-2 and 5-3.

The regeneration sequence was performed three times from:

- July 9, 2007 – July 20, 2007
- Dec 12, 2007 – Dec 19, 2007
- June 9, 2008 – July 1, 2008

Detailed information on regeneration operating parameters is discussed along with the results in Section 5.7.2. The volume of the resin changed through the demonstration due to resin loss. In

addition, the density and volume of resin changes depending on the ion composition of the resin. The volume of resin regenerated varied from 115 gallons to 107 gallons on a chloride exchanged resin basis, the form installed for treating drinking water in this demonstration.

5.5.4 Destruction Unit Operations – Pittsburgh

The destruction unit is illustrated as Figure 2-3. Engineering design drawings of the destruction unit are provided as Figures 5-7 and 5-8.

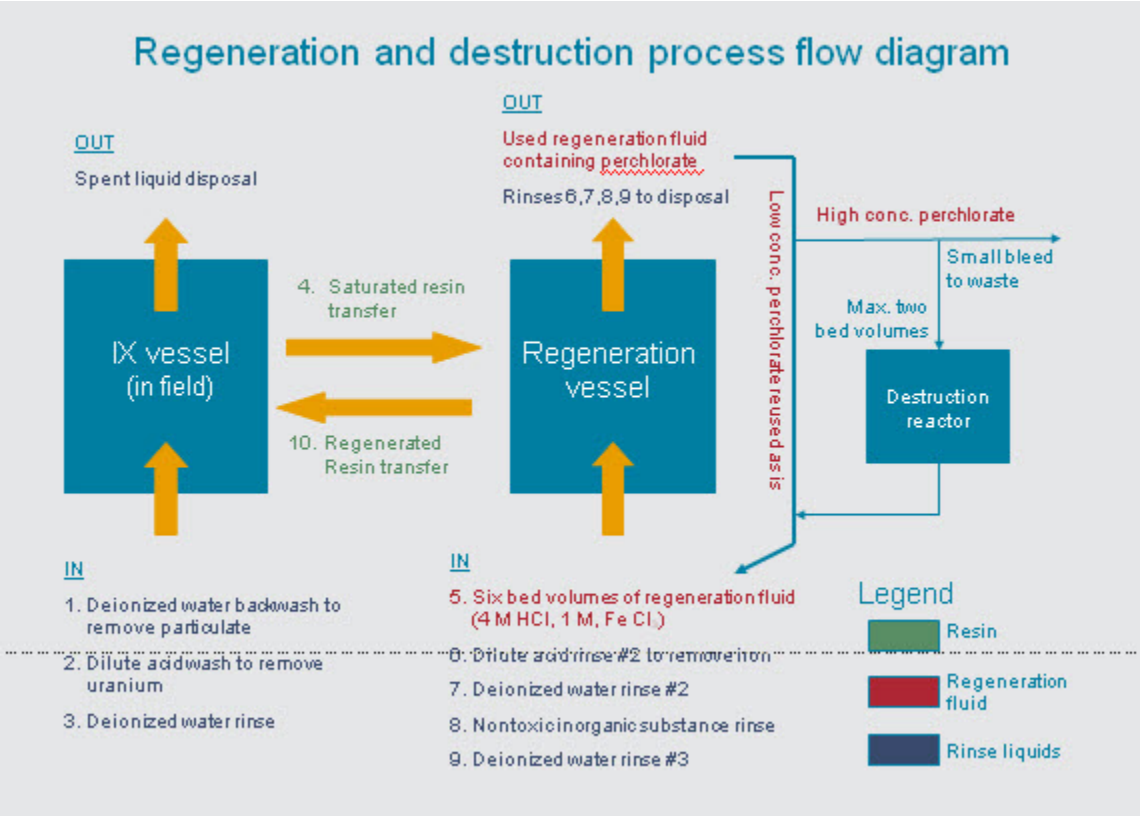

Figure 5-6. Simplified Process Flow Diagram of Regeneration and Destruction

Table 5-7. Resin Regeneration Steps

Step #	Description	Vessel	To	Upflow / Downflow	BVs	Flow Rate gpm	Time (hours)
1A	move resin vessel + resin into position	resin vessel					
1B	connect DI back wash system to resin vessel	resin vessel	DI system				
1C	DI Backwash - Resin backwashed to remove all particulate material with DI water.	resin vessel	DI system	Upflow	2	15	1
1D	Drain Water Wash		Waste tank	downflow			
2A	Diluted Acid Wash - The resin will be washed with 0.1 N HCl. HCl mixed on-line.	resin vessel	uranium waste tank	upflow	10	2	10
2B	Drain diluted acid	resin vessel	uranium waste tank	downflow			
2C	DI wash - to remove any residue acid	resin vessel	waste tank	downflow	3	2	3
2D	remove resin vessel outside, transfer resin from resin vessel to regeneration vessel and move the regeneration vessel into position	resin vessel	regeneration vessel				
3A	Regeneration - Resin will be regenerated with 6 BV of 4 M HCl and 1 M $FeCl_3$.	regeneration vessel	drums	upflow	2	0.48	24
3B		regeneration vessel	tank D and E	upflow	4		
4A	Dilute Acid Rinse - The resin will be rinsed with 0.1 N HCl.	regeneration vessel	drums	downflow	2	1.6	2.4
4B	Dilute Acid Rinse - Downflow		waste tank	Downflow	2	1.6	2.4
5	Deionized Water Rinse - The resin will be rinsed with deionized water.	regeneration vessel	waste tank	Downflow	6	1.6	7.2
6	Nontoxici inorganic Rinse - Resin will be rinsed with a 0.2 N Solution.	regeneration vessel	waste tank	Downflow	4	1.6	4.8
7	Final Deionized Water Rinse	regeneration vessel	waste tank	Downflow	6	1.6	7.2
8	move regeneration vessel, transfer resin from regeneration vessel back to resin vessel, measure resin height, drain water and the resin &resin vessel is ready to be shipped back to CA	regeneration vessel	resin vessel				

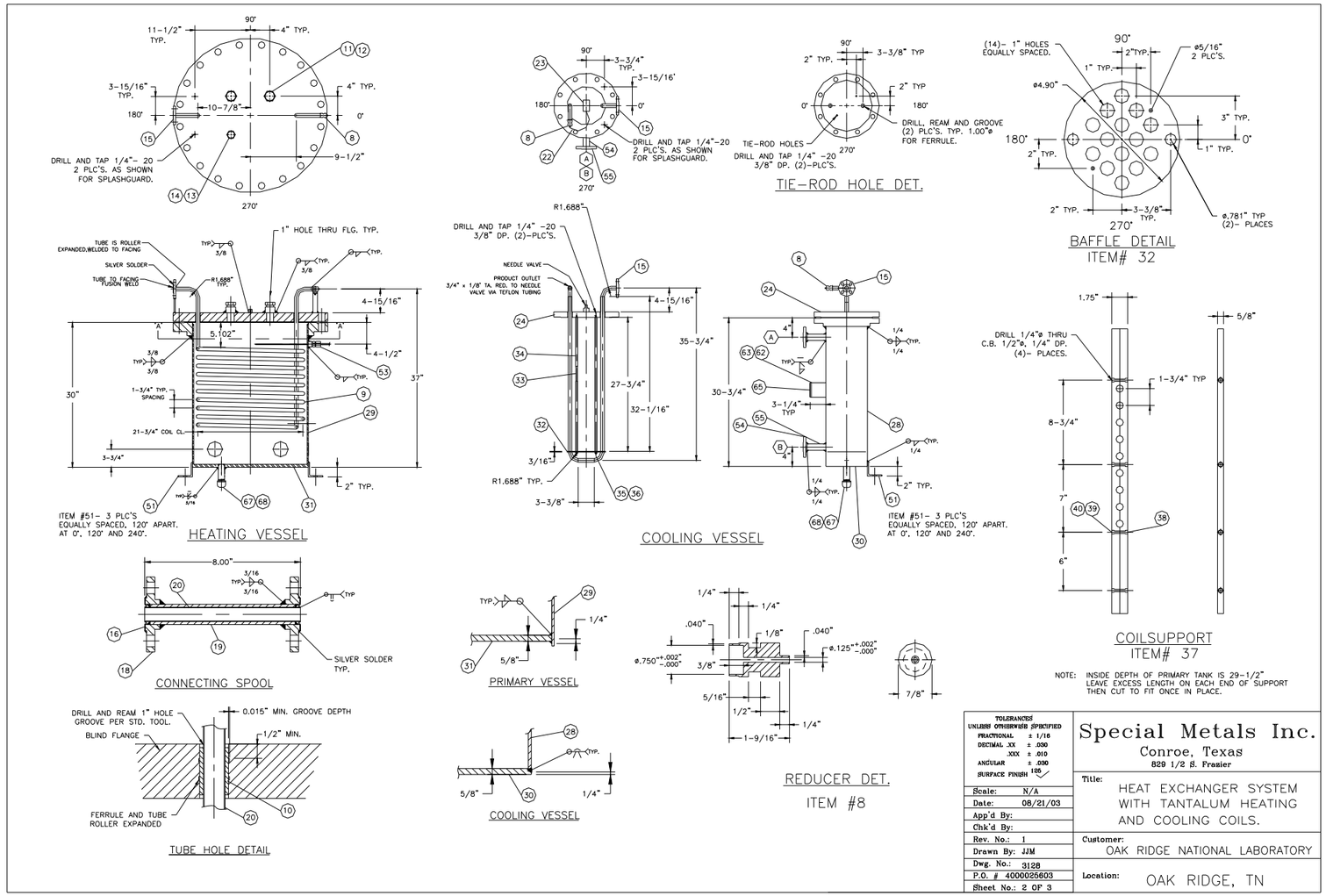

Figure 5-7. Destruction Unit with Tantalum Heating and Cooling Coils Component Views

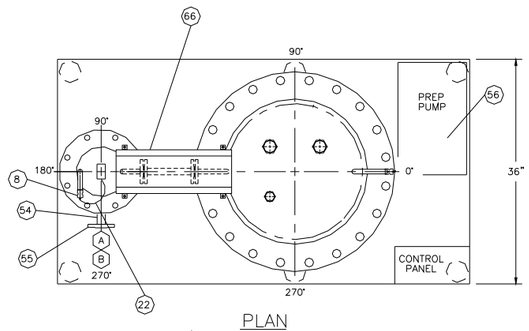

PLAN

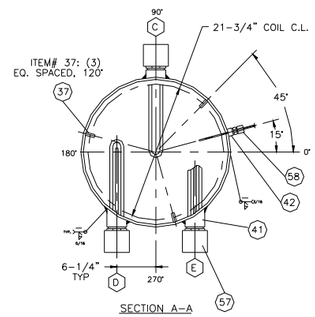

SECTION A–A

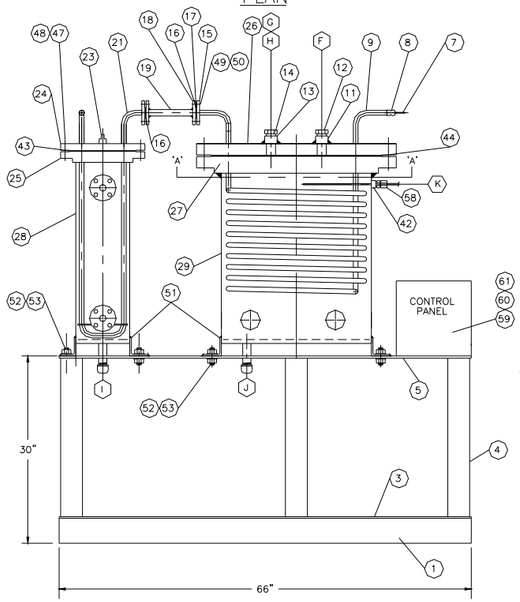

ELEVATION

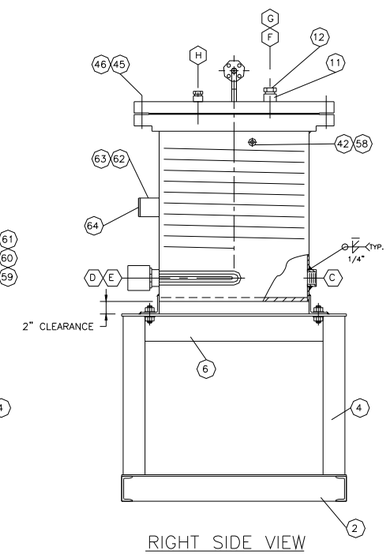

RIGHT SIDE VIEW

NOTES:

1. BUILT IN ACCORDANCEWITH ASME SECTION VIII DIV. 1, LATEST EDITION. 'U' STAMP REQUIRED.
2. STAINLESS STEEL WELDING PERFORMED TO GTAW P-8, SUPPORTING POR GTAW P8Q.
3. ALL TANTALUM WELDS TO BE LPI TESTED.
4. HYDROSTATIC TEST SHELL SIDE AT 73 PSI FOR 1/2 HOUR. BOTH HEATING AND COOLING VESSELS.
5. HYDROSTATIC TEST TUBE SIDE AT 350 PSI FOR 1/2 HOUR.
6. CYCLE TEST COMPLETE UNIT WITH HEATING OIL PRIOR TO SHIPMENT.
7. UNIT TO BE SHIPPED PROTECTED ON WOODEN SKID.
8. HEATING VESSEL TO BE INSULATED WITH 2" THICK INSULATION AROUND PERIMETER OF PIPE AND BOTTOM.
9. CARBON STEEL TABLE TO BE PAINTED WITH CORROSION RESISTANT PAINT.
10. PROCESS INLET AND OULET TO BE PROTECTED WITH SILICONE TUBING COVERING THE TANTALUM TUBES.

INSTRUMENTATION DATA

ITEM NO.	QTY. REQ'D.	DESCRIPTION
56	1	HPLC PREP 24/ PREP 100 PUMP; MFG.: LabAllionce
57	3	SCREW PLUG IMMERSION HEATER 2" NPT., 12" INSERTION LENGTH
58	1	TYPE 'J' THERMOCOUPLE 6" PROBE LENGTH, 4" INSERTION LENGTH
59	3	TEMPERATURE CONTROL MODEL# ETR-9300-412113, MFG.; OGDEN
60	3	SOLID STATE RELAY 480V 30 AMP
61	1	S.S. GASKETED CONTROL PANEL BOX

HEATING VESSEL NAMEPLATE DATA

NB 65 CERTIFIED BY SPECIAL METALS INC.

U W RES

50 PSI AT 450°F MAWP

-20°F AT 50 PSI MDMT

YEAR BUILT 2003

MFG SERIAL NO. 189

COOLING VESSEL NAMEPLATE DATA

NB 66 CERTIFIED BY SPECIAL METALS INC.

U W

100 PSI AT 450°F MAWP

-20°F AT 100 PSI MDMT

YEAR BUILT 2003

MFG SERIAL NO. 190

REVISIONS

NO.	REV.	DATE
1.		
2.		

NOZZLE SCHEDULE

ITEM	FLANGE SIZE	CLASS	PIPE	PROJ. O.D.	SERVICE	QTY
A	1-1/2"	150#	1-1/2 S/40	4"	OUTLET	1
B	1-1/2"	150#	1-1/2 S/40	4"	INLET	1
C	2"	6000#	1/2 COUPLING		INSTR. CONN.	1
D	2"	6000#	1/2 COUPLING		INSTR. CONN.	1
E	2"	6000#	1/2 COUPLING		INSTR. CONN.	1
F	1"	6000#	1/2 COUPLING		OIL FILL	1
G	1"	6000#	1/2 COUPLING		VENT	1
H	1/2"	6000#	1/2 COUPLING		MISC.	1
I	1"	6000#	1" S/40 PIPE		DRAIN	1
J	1"	6000#	1" S/40 PIPE		DRAIN	1
K	1/8"	6000#	1/2 COUPLING		INSTR. CONN.	1

BILL OF MATERIALS

ITEM NO.	NO. REQ.	DESCRIPTION	MATERIAL	SIZE
55	2	FLANGE	SA 182 304	1-1/2" 150# RFSO
54	2	NOZZLE	SA 312 304	1-1/2" S/40 x 4"
53	12	NUT	STAINLESS STEEL	1/2" NC
52	6	BOLT	STAINLESS STEEL	1/2" x 1-3/4" LONG
51	6	ANGLE	SA 182 304	3" x 3" x 1/8" x 2"LONG
50	16	NUT	SA 194	1/2" NC
49	8	STUD	SA 193 B3M	1/2" x 2-1/2"
48	16	NUT	SA 194	3/4" NC
47	8	STUD	SA 193 B3M	3/4" x 4-1/2"
46	40	NUT	SA 194	1-1/4" NC
45	20	STUD	SA 193 B3M	1-1/4 x 6-3/4"
44	1	GASKET	COMPOSITION	1/8" x 23-1/4"I.D. x 27-1/4"O.D.
43	1	GASKET	COMPOSITION	1/8" x 8" I.D. x 10-5/8" O.D.
42	1	HALF COUPLING	SA 182 304	1/8" NPT 6000#
41	3	HALF COUPLING	SA 182 304	2" NPT 6000#
40	9	NUT	STAINLESS STEEL	1/4" NC
39	9	WASHER	STAINLESS STEEL	1/4" LOCK WASHER
38	9	BOLT	STAINLESS STEEL	1/4" NC x 2"
37	3	SUPPORT	GLASS FILLED TEFLON	1-3/4" x 5/8" x 30" DET. PG.3
36	4	NUT	STAINLESS STEEL	1/4" NC
35	2	WASHER	STAINLESS STEEL	1/4" FLAT WASHER
34	2	SPACER	304 STAINLESS	1/8" S/40 PIPE x 27-3/4"
33	2	TIE-ROD	304 STAINLESS	1/4"Φ x 29-1/4"
32	1	BAFFLE	TEFLON	1/4" x 8" O.D. SEE DETAIL
31	1	PLATE	SA 240 304	5/8" x 23-1/2"Φ
30	1	PLATE	SA 240 304	5/8" x 8-5/8"Φ
29	1	PIPE	SA 312 304	24" SCH/10 x 29-1/2"
28	1	PIPE	SA 312 304	8" SCH/40 x 30-1/2"
27	1	FLANGE	SA 182 304	24"- 150# RFSO
26	1	FLANGE	SA 182 304	24"- 150# RFBL
25	1	FLANGE	SA 182 304	8"- 150# RFSO
24	1	FLANGE	SA 182 304	8"- 150# RFBL
23	1	NEEDLE VALVE	THERMOPLASTIC	1/4" x 1/4" FEMALE NPT
22	1	TUBING	TEFLON	1/8" x 8"
21	1	COOLING ASSY.	TANTALUM	3/4" O.D. X .020" W Tubing
20	1	TUBE	TANTALUM	3/4" O.D. x .020"W x 8"
19	1	PIPE	SA 312 304	3/4" SCH/40 x 7-3/4"
18	2	FLANGE	SA 182 304	3/4"- 150# RFSO
17	2	GASKET		1.69" O.D. x 1/8" THK.
16	4	FACING	TANTALUM	1.69" O.D. x .020" THK.
15	2	FLANGE	SA 182 304	3/4" 150# RFBL
14	1	PLUG	STAINLESS STEEL	1/2" NPT
13	1	HALF COUPLING	SA 182 304	1/2" NPT x 6000#
12	2	CAP	STAINLESS STEEL	1" NPT
11	2	PIPE	SA 312 304	1" SCH/40 x 4" LONG
10	4	FERRULE	COPPER	3/4" XH x 1-1/2"
9	1	COIL ASSEMBLY	TANTALUM	3/4" O.D x .020"W Tubing
8	2	REDUCER	TANTALUM	3/4" x 1/8" RED.
7	2	TUBE	TANTALUM	1/8" O.D. x .020"W x 12"
6	1	TOP SUPPORT	SA 36	C4 x 7-1/4# x 28-1/2" LONG
5	1	TOP PLATE	SA 36	1/2" X 36" x 66"
4	6	TABLE LEGS	SA 36	3" STD. WALL x 25-1/4" LONG
3	1	BOTTOM PLATE	SA 36	1/4" x 36" x 66"
2	1	BOTTOM SUPPORT	SA 36	C4 x 7-1/4# x 36" LONG
1	2	BOTTOM RUNNERS	SA 36	C4 x 7-1/4# x 66" LONG

TOLERANCES UNLESS OTHERWISE SPECIFIED
FRACTIONAL ± 1/16
DECIMAL .XX ± .030
.XXX ± .010
ANGULAR ± .030
SURFACE FINISH 125

Special Metals Inc.
Conroe, Texas
829 1/2 S. Frazier

Title: HEAT EXCHANGER SYSTEM WITH TANTALUM HEATING AND COOLING COILS.

Scale: N/A
Date: 08/21/03
App'd By:
Chk'd By:
Rev. No.: 0
Drawn By: JJM
Dwg. No.: 3128
P.O. # 4000025603
Sheet No.: 1 OF 3

Customer: OAK RIDGE NATIONAL LABORATORY

Location: OAK RIDGE, TN

Figure 5-8. Destruction Unit with Tantalum Heating and Cooling Coils Integrated System

The two primary periods of destruction module operation were from:

- October 3, 2007 – November 21, 2007
- January 24, 2008 – March 24, 2008

Operational conditions and events for the destruction unit are discussed with the results of this unit process in Section 5.7.3. Among the components of the perchlorate destruction system that required maintenance or replacement during the demonstration were:

- Back-pressure regulator
- Immersion heating element
- Junction between plastic tubing leading from pump and tantalum tubing of destruction system
- Solution feed pump

During operation of the perchlorate destruction system, process control difficulties were experienced including pressure fluctuations in the reactor. These pressure fluctuations were attributed to gas generation (likely nitrogen). One method that was managed was used to minimize the pressure fluctuations was to manage the influent stream fed to the destruction reactor to moderate the nitrate concentration.

The back-pressure regulator was originally a simple capillary that was subject to clogging, but this was later changed to a back-pressure regulator equipped with a pressure relief valve in late October/early November 2007. An additional check valve was also added to isolate the pump from the system in late October/early November 2007.

A problem occurred in August 2007 when a leak was observed at the connection between the plastic tubing leading from the pump and the tantalum tubing of destruction system. This led to a small, but secondarily-contained leak of acidic solution from the perchlorate destruction reactor when an operator tried to repair the leak without first properly cooling the unit. An additional length of tantalum tubing was added to the system to cool the location where the plastic and tantalum connect.

Pump seals were subject to leakage and required frequent replacement. Pump heads also required frequent replacements.

5.5.5 Demobilization - FWC

Spent IX resin will be transported off-site for destruction at the Covanta Stanislaus Waste-to-Energy facility in Crows Landing, California. The Covanta Stanislaus facility routinely disposes of spent perchlorate IX resins.

All demonstration piping and equipment will be removed from the site, and will be either properly disposed of or returned to Calgon (the IX vessel, manifold, and hoses). The concrete pad will either be left in place or demolished and removed from the site, as directed by FWC. If the concrete pad is demolished, the ground surface will be returned to pre-demonstration condition.

5.5.6 Schedule

An overall project Gantt chart is provided as Figure 5-9.

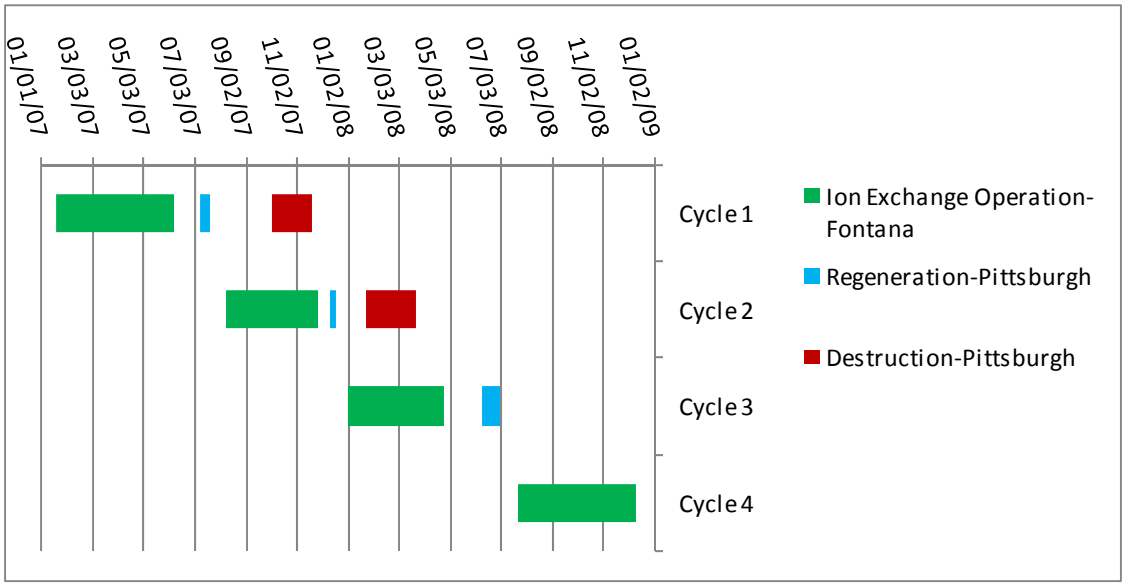

Figure 5-9. Project Operational Gantt Chart

5.6 SAMPLING METHODS

5.6.1 Data Collection

The primary chemical sampling and monitoring procedures for performance verification in the project are listed in Table 5-8 for each unit process. The analytical methods are further detailed in Table 5-9. All of the analyses listed in Table 5-8 and Table 5-9 were performed by Weck laboratories except radon provided by Kellco, and confirmatory perchlorate analyses by Severn Trent Laboratories. All samples from the IX system were collected by ARCADIS personnel. All samples from the regeneration and destruction processes were collected by Calgon personnel operating under ARCADIS oversight.

Additional engineering/economic parameters were measured and recorded for each unit process. These are summarized in Table 5-10 (IX), Table 5-11 (regeneration), and Table 5-12 (perchlorate destruction). These include some additional/repeated chemical analyses conducted in Calgon's Pittsburgh facility and by their subcontractor Severn Trent Laboratories in Sacramento, California.

Table 5-8. Total Number and Types of Samples Collected

Process	Matrix	Number of Samples	Analyte	Locations
IX Unit Process (4 Cycles IX)	Water	Weekly Samples	Perchlorate by 314	System Influent and System Effluent
	Water	6	Perchlorate by 332.0	System Influent and System Effluent
	Water	Weekly Samples[c]	Physical/Chemical Parameters[a]	System Influent and System Effluent
	Water	Bi-Weekly Samples[c]	Chloride and Fluoride	System Influent and System Effluent
	Water	Monthly Samples	Title 22 Metals and Major Cations[b]	System Influent and System Effluent
	Water	Monthly Samples	Dissolved Fe, Mn, U	System Influent and System Effluent
	Water	Monthly Samples	Gross Alpha	System Influent and System Effluent
	Water	Monthly Samples	Total Fe, Mn, As, U	System Influent and System Effluent
	Water	Monthly Samples	VOCs	System Influent and System Effluent
	Water	Monthly Samples[d]	SVOCs	System Influent and System Effluent
	Water	Bi-Weekly Samples[c]	Nitrosamines	System Influent and System Effluent
	Water	Monthly Samples	Radon	System Influent and System Effluent
Regeneration Unit Process (3 Cycles Regeneration)	Water	23	Perchlorate	Regenerant tanks and Rinse Solutions
	Water	23	Physical/Chemical Parameters[a]	Regenerant tanks and Rinse Solutions
	Water	20	Chloride and Fluoride	Regenerant tanks and Rinse Solutions
	Water	12	Title 22 Metals and Major Cations[b]	Regenerant tanks and Rinse Solutions
	Water	12	Dissolved Fe, Mn, U	Regenerant tanks and Rinse Solutions
	Water	11	Gross Alpha	Regenerant tanks and Rinse Solutions
	Water	18	Total Fe, Mn, As, U	Regenerant tanks and Rinse Solutions
	Water	20	VOCs	Regenerant tanks and Rinse Solutions
	Water	16	SVOCs and N/P Pesticides	Regenerant tanks and Rinse Solutions
	Water	23	Nitrosamines	Regenerant tanks and Rinse Solutions
Destruction Unit Process (2 Cycles Destruction)	Water	9	Perchlorate	System Influent and System Effluent
	Water	9	Physical/Chemical Parameters[a]	System Influent and System Effluent
		9	Chloride and Fluoride	System Influent and System Effluent
	Water	9	Title 22 Metals and Major	System Influent and

Process	Matrix	Number of Samples	Analyte	Locations
			Cations[b]	System Effluent
	Water	9	Dissolved Fe, Mn, U	System Influent and System Effluent
	Water	7	Gross Alpha	System Influent and System Effluent
	Water	9	Total Fe, Mn, As, U	System Influent and System Effluent
	Water	9	VOCs	System Influent and System Effluent
	Water	9	SVOCs and N/P Pesticides	System Influent and System Effluent
	Water	9	Nitrosamines	System Influent and System Effluent

[a] Physical/Chemical Parameters include: Nitrate, Sulfate, pH, TDS, and TOC
[b] Title 22 Metals: Al, Sb, As, Ba, Be, Cd, Cr, Cu, Pb, Hg, Ni, Se, Ag, Tl, V, Zn; Major Cations: Na, Ca, K, Mg
[c] Beginning on the third Cycle IX, these analysis were reduced to monthly after the first two weeks of each cycle
[d] Beginning on the third Cycle IX, this analysis was only performed once, during the first week of each cycle

Table 5-9. Analytical Methods for Sample Analysis

Analyte	Method	Analytical Instrument Used	Detection Limit	Reporting Limit	Major Interferences (Listed only for Critical Parameters)
Perchlorate	314	IC	0.63µg/L	2.0µg/L	High mineral content or hardness; high concentrations of common anions such as chloride, sulfate and carbonate
Perchlorate	332.0	IC-MS/MS			None
Nitrate	300.0	IC	0.097mg/L	0.50mg/L	Co-elution by carbonate and other small organic anions; large amounts of acetate
Sulfate	300.0	IC	0.14mg/L	0.75mg/L	-
pH	SM4500H	Electro	-	-	-
TDS	SM2540C	Gravimetric	4mg/L	10mg/L	-
TOC	SM5310C	UV-Persulfate	0.013mg/L	0.3mg/L	-
Chloride	300.0	IC	0.05mg/L	0.5mg/L	-
Fluoride	300.0	IC	0.1mg/L	0.1mg/L	-
Title 22 Metals and Major Cations	200.7	ICP-AES/ ICP-MS	See result Sections 5.7.1.9.	See Data tables in Section 5.7.1.9	-
Dissolved Fe	200.7	ICP-AES	0.0048mg/L	0.02mg/L	-
Dissolved Mn	200.7/200.8	ICP-AES/ ICP-MS	0.0048mg/L	0.02mg/L	-
Gross Alpha	900.0			1pCi/L	-
Dissolved U	200.7/200.8	ICP-AES/ ICP-MS	0.015µg/L	0.20µg/L	Changes in viscosity and surface tension, especially in samples with high dissolved solids or high acid concentrations/dissolved solids < 0.2% (w/v) recommended
Total Fe	200.7	ICP-AES	0.012mg/L	0.02mg/L	-
Total Mn	200.7/200.8	ICP-AES	0.0012mg/L	0.010mg/L	-
Total As	200.7/200.8	ICP-MS	0.066µg/L	0.40µg/L	-
Total U	200.8	ICP-MS	0.015µg/L	0.20µg/L	Dissolved solids < 0.2% (w/v) recommended
VOCs	524.2	GC/MS	See result tables in Section 5.7.1.19, appendix C	See result tables in Section 5.7.1.19, appendix C	-
SVOC and N/P Pesticides	525.2	GC/MS	See results tables in Section 5.7.1.20, appendix C,	See results tables in Section 5.7.1.20, appendix C,	-
NDMA, NDEA and NDPA	1625M or 521	GC/MS or GC/MS/MS	0.50ng/L	2.0ng/L	Interferences co-extracted from samples vary considerably and from source to source
Radon	SM7500-Rn or EPA 913.0	Liquid Scintillation	-	10pCi/L	-

Table 5-10. Engineering/Economic Parameters for IX Unit Process

Parameter	Method	Observer	Frequency
Temperature	Thermometer or thermocouple	ARCADIS or FWC personnel operating under ARCADIS direction	12 times per month, at system influent and system effluent
Flow rate	Factory calibrated magnetic or mechanical flow meter accurate to a minimum of +/- 0.5 percent	ARCADIS or FWC personnel operating under ARCADIS direction	12 times per month, at system influent and system effluent
Pressures	Factory calibrated pressure gauges	ARCADIS or FWC personnel operating under ARCADIS direction	12 times per month, at system influent and system effluent
Operational labor required and adjustments made	Recorded as worked in logbook and/or daily work description forms in time sheet system	ARCADIS, FWC and Calgon personnel	Whenever labor was performed
Resin mass and volume	Heavy Load Hydraulic Hanging Scale	Calgon personnel operating under ARCADIS direction	4 times
Resin bed dimensions	Vessel manufacturer's equipment data sheet and/or specification	Calgon personnel operating under ARCADIS direction	Once during project
Operational times and out of service date and times	Watch set to local prevailing time	ARCADIS, FWC and Calgon personnel	At any time something occurred – unit put into or taken out of service, media changed out, well pump on and off

Table 5-11. Engineering/Economic Parameters for Regeneration Unit Process

Parameter	Method/ Instrument	Observer	Frequency	Practical Reporting Limit	Reporting Units
Total acidity	Hach method – free + total acidity) drop count titration)	Calgon personnel (Pittsburgh laboratory) operating under ARCADIS direction	Approximately 20 samples per regeneration event taken at both system influent and effluent and during rinsing	< 5	ppm (mg/L)
Perchlorate	Ion chromatography EPA Method 314.1 modified	Calgon personnel (Pittsburgh laboratory) operating under ARCADIS direction	Approximately 20 samples per regeneration event and approximately 20 samples per rinse event taken at both system influent and effluent	< 2.5	ppb (µg/L)

Parameter	Method/ Instrument	Observer	Frequency	Practical Reporting Limit	Reporting Units
Nitrate	300.1 modified – Ion Chromatography	Calgon personnel (Pittsburgh laboratory) operating under ARCADIS direction	Approximately 20 samples per regeneration event and approximately 20 samples per rinse event taken at both system influent and effluent	< 0.1	ppm (mg/L)
Sulfate	300.1- modified Ion Chromatography	Calgon personnel operating under ARCADIS direction	Approximately 20 samples per regeneration event and approximately 20 samples per rinse event taken at both system influent and effluent	< 0.2	ppm (mg/L)
Total iron	Hach Method 8008 Ferro Ver Method / Standard methods 3111B	Calgon personnel (Pittsburgh laboratory) operating under ARCADIS direction	Approximately 20 samples per regeneration event and approximately 20 samples per rinse event taken at both system influent and effluent	Flame AA : 0.5 Hach : 0.02	ppm (mg/L)
Chloride	300.1 – modified Ion Chromatography	Calgon personnel (Pittsburgh laboratory) operating under ARCADIS direction	Approximately 20 samples per regeneration event and approximately 20 samples per rinse event taken at both system influent and effluent	< 0.1	ppm (mg/L)
Regenerant volume	Volumetric Containers and/or calibrated rotameters	Calgon personnel operating under ARCADIS direction	Every bed volume, and every sampling event	1.0 ml	Liters
PostWash/Rinse volume	Volumetric Containers and/or calibrated rotameters	Calgon personnel operating under ARCADIS direction	During rinse events and sampling events	1.0 ml	Liters
PostWash/Rinse volume	Volumetric Containers and/or calibrated rotameters	Calgon personnel operating under ARCADIS direction	During rinse events and sampling events	1.0 ml	Liters

Table 5-12. Engineering/Economic Parameters for Destruction Unit Process

Parameter	Method	Observer	Frequency	Practical Reporting Limit	Reporting Units
Temperature	Thermocouple	Calgon personnel operating under ARCADIS direction	Hourly at each of three heater locations	0.2 °F	°F
Pressure	Gauge – read directly	Calgon personnel operating under ARCADIS direction	Hourly	1.0 psi	psi
Flow rate	Calibrated metering pump[a] (calibrated with a stop watch and a graduated cylinder)	Calgon personnel operating under ARCADIS direction	Hourly	1.0 mL/min	mL/min
Operational Time/rate	Watch, local prevailing time	Calgon personnel operating under ARCADIS direction	Beginning and end of each destruction run, noting any stoppages	1.0 second	seconds, minutes, hours
Volume treated – outlet side only	Volumetric glassware or gravimetric	Calgon personnel operating under ARCADIS direction	For each destruction run	1.0 ml	ml or liters
Ferrous iron concentration	Hach Method 8146	Calgon personnel operating under ARCADIS direction	For each destruction run	< 0.02	ppm (mg/L)
Quantity of readjustment agents added after destruction	The analysis of the recycled regenerant will be recorded, and compared against the acceptance criteria for regenerant. Any necessary chemical or aqueous readjustment will be noted as to volume and/or mass plus source (concentration manufacturer, lot and purity)	Calgon personnel operating under ARCADIS direction	For each destruction run	0.1 ml or 0.1 g	ml, liters or grams, as appropriate
Purge water disposal cost	Invoice	Subcontractor to Calgon – market price	When sufficient purged regeneration solutions accumulates to require disposal under RCRA, at least once per project.	$1.00	dollars

Parameter	Method	Observer	Frequency	Practical Reporting Limit	Reporting Units
Perchlorate	Ion chromatography EPA Method 314.1 modified	Calgon personnel (Pittsburgh laboratory) operating under ARCADIS direction	Inlet and outlet for most runs	< 2.5	ppb (µg/L)
Nitrate	300.1 – modified Ion Chromatography	Calgon personnel (Pittsburgh laboratory) operating under ARCADIS direction	Inlet and outlet for most runs	< 0.1	ppm (mg/L)
Sulfate	300.1 – modified Ion Chromatography	Calgon personnel operating under ARCADIS direction	Inlet and outlet for most runs	< 0.2	ppm (mg/L)
Total iron	Hach Method 8008 Ferro Ver Method / Standard methods 3111B	Calgon personnel (Pittsburgh laboratory) operating under ARCADIS direction	Inlet and outlet for most runs	Flame AA : 0.5 Hach : 0.02	ppm (mg/L)

[a] The meter pump calibration can be crosschecked using the volumetrically measured volume treated and the operational time

5.6.2 Experimental Controls

5.6.2.1 Experimental Controls – IX

For the IX resin the primary experimental control is the influent water perchlorate concentration. The assumption was made that if the IX resin was not operated, the influent and effluent concentrations would be equal given that it is the only process unit in the system in FWC. Perchlorate data was normally collected on both the influent and effluent sides of the bed allowing a direct comparison.

A secondary experimental control for the IX process was the initial several months testing with the virgin resin (prior to being regenerated). Since the performance of this resin has been well documented at other facilities under similar conditions, the combination of this initial baseline data and the literature provides a solid basis for comparing the performance of the fresh resin to:

- Resin regenerated with fresh regenerant
- Resin regenerated with recycled regenerant

5.6.2.2 Experimental Controls – Regeneration

An important experimental control for the regeneration process was provided by the performance of the resin at the end of its initial two to three month operating period. In other words, we ran

the resin to substantial perchlorate saturation so that any perchlorate exchange achieved with the regenerated resin after it was returned to service could be reasonably attributed to the effectiveness of the regeneration. (IX resins do not normally recover active sites merely by being taken out of service and "rested.")

5.6.2.3 Experimental Controls – Perchlorate Destruction

Perchlorate concentration was normally measured both at the influent and effluent of the destruction reactor during each test.

5.6.3 Analytical/Testing Methods

The primary analytical chemistry testing program for performance verification is outlined in Table 5-8 and 5-9. Additional engineering parameters are outlined in Tables 5-10, 5-11, and 5-12.

Throughout the demonstration, the primary chemical analyses required for performance assessment were performed off-site by Weck Laboratories (a California certified Small Disadvantaged Business). Their applicable certifications are:

- NELAC Certified (Certificate Number 04229CA)
- California Department of Health Services Environmental Laboratory Accreditation Program (ELAP) Certificate Number 1132
- Los Angeles County Sanitation Districts Industrial Wastewater Testing. Laboratory Identification Number 10143

Extensive information on Weck's QA programs is provided in Appendix D.

There are several recognized limitations in the use of EPA Method 314 for perchlorate analysis. The analysis is 1) subject to false positives due to the unspecific nature of the conductivity detector; 2) can be subject to matrix interferences, especially in the presence of high concentrations of other anions; and 3) is inappropriate for use in samples with high total dissolved solids (TDS) due to interference problems.

For these reasons, six perchlorate samples were submitted to another laboratory for confirmatory analysis by Method 332.0 (IC-MS/MS). This method provides for much greater sensitivity, eliminates matrix interferences (false positives), and provides for high confidence in compound identification. The use of MS/MS in lieu of MS allows for structural information from fragmentation (not just the analyzing of molecular ions), and quieter background and better chromatography (separation) for difficult samples. There have been no reports of false positive results using this technique. The laboratory used for this confirmatory analysis was Test America Savannah (GA). Test America Savannah has the following certifications:

- NELAP Accreditation

- A2LA Accreditation (ISO 17025)
- Federal Accreditation through U.S. Navy (NFESC), Army (USACE) and Air Force Center of Environmental Excellence - AFCEE approval
- State certifications in 28 states

For this project method 332.0 and method 314 agreed well (see Section 5.7.1.1).

However some analytical work for process control and optimization was performed in the Calgon Pittsburgh facility. In particular, some of the matrices requiring testing are not amenable to standard methods and Calgon/ORNL has developed specialized methods. For example, to analyze perchlorate on resin we used an analytical test utilizing the ORNL regeneration reagent as an extractant on a 10 to 20 ml (0.33 to 0.68 oz) sample, followed by a conventional analytical quantification of perchlorate.

5.6.4 Quality Assurance/Quality Control

The Quality Assurance Project Plan (QAPP) in Appendix B delineates the project team's approach for monitoring the demonstration to ensure that the facilities, equipment, personnel, methods, practices, records, and controls are in conformance with ESTCP-approved data quality objectives. The QAPP was developed in accordance with recommended EPA guidance on data quality objectives, QAPP preparation, and data quality assessment.

5.7 SAMPLING RESULTS

Sampling results will be organized in three major subsections (Sections 5.7.1, 5.7.2 and 5.7.3) covering the three major unit processes in IIX: IX, regeneration and destruction. Within each subsection results for key contaminant groups will be presented separately. Subsequent briefer subsections (Section 5.7.4 and Section 5.7.5) will cover secondary topics such as the simulated distribution system test and the handling of rinse water streams.

5.7.1 IX Unit Process Sampling Results

The IX process for this demonstration was operated through four complete cycles with a single batch of resin, once with virgin resin and then three times with regenerated resin. The number of IX cycles was limited by funding; there were no indications in the dataset that the resin could not have been regenerated and used for a fifth or subsequent cycle(s). Since the virgin A-530E resin used in this demonstration is NSF approved and widely used for perchlorate treatment, the performance of the regenerated resin at FWC is frequently compared to the virgin resin in this subsection.

5.7.1.1 Perchlorate – IX Unit Process

Perchlorate concentration was measured periodically through four resin loading cycles at both influent and effluent locations of the IX wellhead treatment unit; detailed analytical results can

be found in Appendix C. The concentration of perchlorate in the influent water is shown in Figure 5-10 through all four resin loading cycles. One sample in the fourth resin loading cycle returned a non-detect result which is plotted as 0.0 µg/L; no cause has been found for this anomalous result so it has not been rejected. Aside from the one anomalous influent analysis, the influent perchlorate concentration remained modest, averaging 8.0 µg/L, but well above the analytical reporting limit through all resin loading cycles of the project. The influent concentration varied from 5.0 - 11.0 µg/L through all resin loading cycles. There appear to be short term trends in the perchlorate influent concentration that may reflect active well management activities performed at FWC to maintain acceptable water quality.

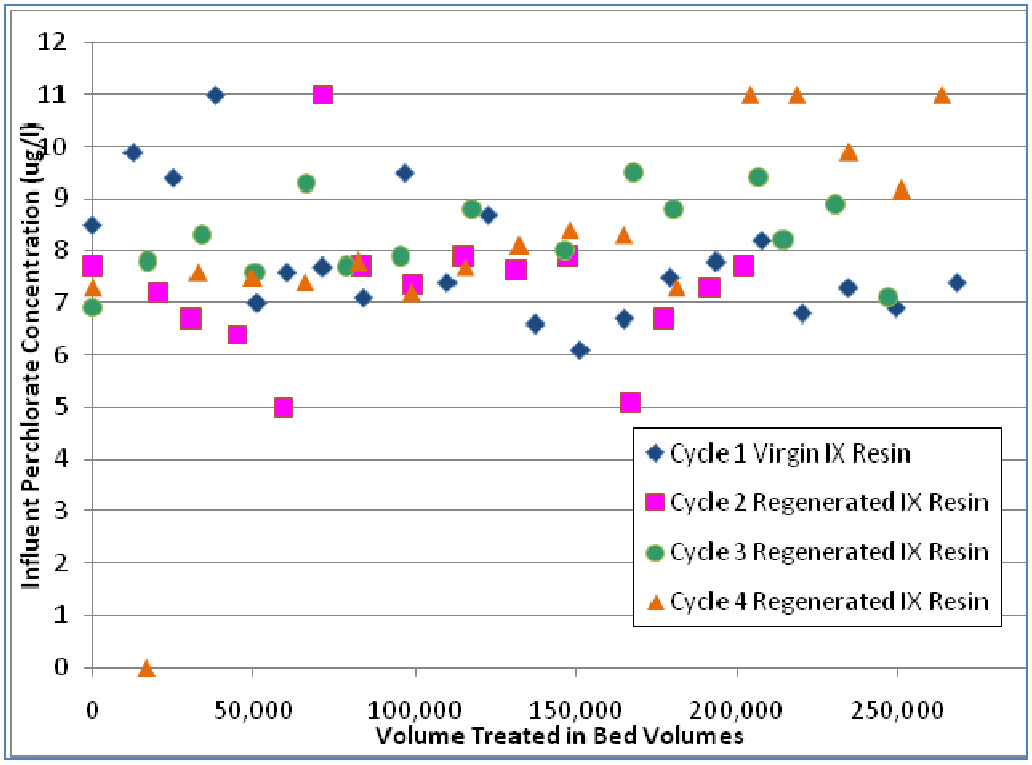

Figure 5-10. Influent Perchlorate Concentrations at FWC Wellhead IX Treatment Unit

The effluent concentrations from the IX wellhead treatment unit are shown in Figure 5-11 through all four resin loading cycles. The effluent concentrations remained below reporting limit for a significant treatment volume after installation of virgin IX resin and after each installation of regenerated IX resin (typically > 100,000 BVs); non-detects have been plotted as 0.0 µg/L perchlorate. After this initial treatment volume, the concentration of the effluent gradually increases with increased treatment volume. The maximum effluent concentration observed in this demonstration was 9.5 µg/L perchlorate. These breakthrough curves for the regenerated resins are essentially indistinguishable from that of the virgin resin and from each other.

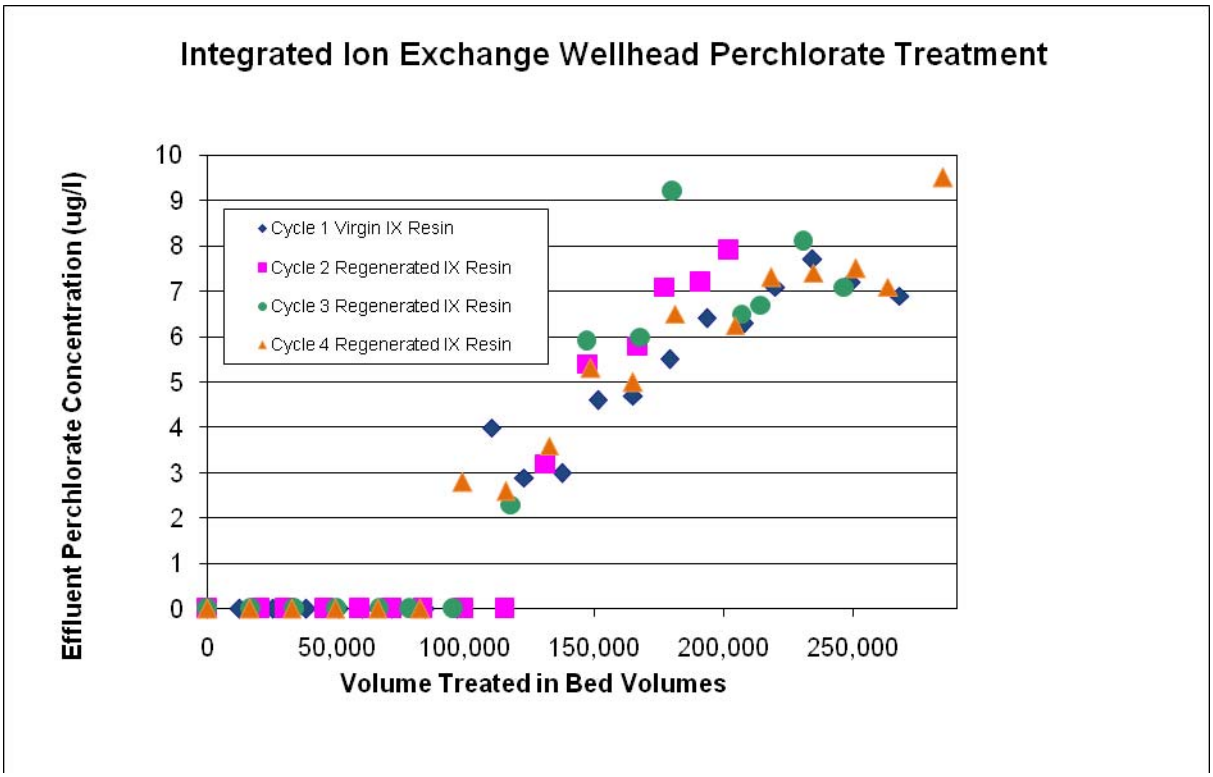

Figure 5-11. Effluent Perchlorate Concentration at FWC Wellhead IX Treatment Unit

In addition to routine monitoring, several samples from the wellhead treatment system were analyzed by a more sensative and selective method,using EPA Method 332.0. The higher sensativity/selectivity analytical results, shown in Table 5-13, compare favorably to analytical results of coincident samples analyzed by EPA Method 314.0.

Table 5-13. Validation of Perchlorate Measurements

Sample Date	Location	EPA Method 332.0; µg/L	EPA Method 314.0; µg/L
01/17/2007	Influent	9.7	8.5
03/28/2007	Influent	8.7	8.7
02/15/2008	Influent	6.3	
02/22/2008	Effluent	2.6	
02/27/2008	Effluent	3.4	3.5
10/02/2008	Effluent	6.4	5.0

5.7.1.2 Nitrate – IX Unit Process

Nitrate concentration was measured periodically through four resin loading cycles at both influent and effluent locations of the IX wellhead treatment unit; detailed analytical results can be found in Appendix C. Influent nitrate concentration ranged from 29 – 40 mg/L all nitrate

results in this report are presented in units of as nitrate, not nitrogen. As shown in Figure 5-12, nitrate concentration climbed from nominally 31 mg/L to nominally 38 mg/L by the beginning of the second resin loading cycle on August 10, 2007. The average influent nitrate concentration over all four resin loading cycles was 35 mg/L. The effluent concentration ranged from non-detect to 40 mg/L. Non-detect results were associated with the initial BVs upon startup of the first, third and fourth resin loading cycles; the first sampling event of the second loading cycle resulted in 7.0 mg/L nitrate. Effluent nitrate concentrations subsequent to the initial sampling event were consistent with the concurrent influent nitrate concentrations. The average effluent nitrate concentration excluding these initial BVs was 35 mg/L. These results are consistent with the claim of the developers of the resin that it is selective for perchlorate over nitrate (see Sections 1.1 and Section 2). The selectivity was observed although the nitrate concentration is more than 1,000 times higher than perchlorate.

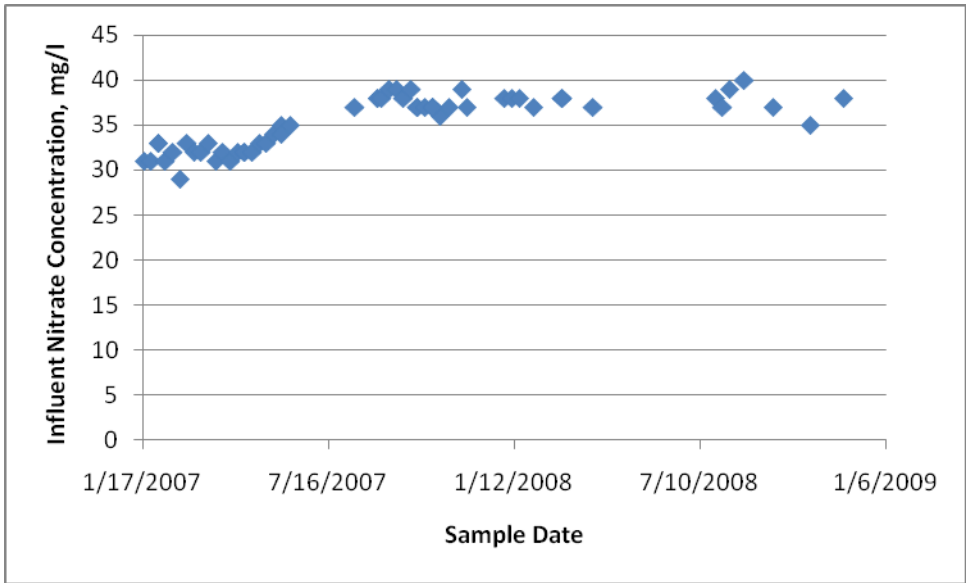

Figure 5-12. Influent Nitrate Concentration at FWC Wellhead IX Treatment Unit

5.7.1.3 Sulfate- IX Unit Process

Sulfate concentration was measured periodically through four resin loading cycles at both influent and effluent locations of the IX wellhead treatment unit; detailed analytical results can be found in Appendix C. Influent sulfate concentrations ranged from 14 to 19 mg/L with an average concentration of 16 mg/L. Effluent sulfate concentrations ranged from non detect to 18 mg/L. As with nitrate, the sulfate concentrations during the first BVs of each resin loading cycle were low: 1.9-1.6 mg/L sulfate for the first resin loading cycle, 2.0 mg/L sulfate for the second resin loading cycle, and non-detect for the third and fourth resin loading cycle. Excluding these samples, the effluent sulfate concentration averaged 16 mg/L, the same as the influent. As with nitrate, this indicates that this resin is indeed highly selective in the presence of concentrations of competing anions approximately 1,000 times higher than the perchlorate concentration.

5.7.1.4 pH – IX Unit Process

Influent and effluent pH was measured periodically through four resin loading cycles. Detailed analytical results can be found in Appendix C. As shown in Figure 5-13, water at FWC is relatively basic, but generally falls within the EPA secondary MCL for pH 6.5-8.5. Influent pH ranged from 7.16 to 8.59 with an average pH of 7.88. Effluent pH ranged from 6.90 to 8.50 with an average of 7.83 excluding start-up values from the first loading cycle. On average, the effect of IX technology was to marginally decrease the pH of the influent water. Effluent pH was consistently lower than the influent pH upon installation of either virgin or regenerated resin.

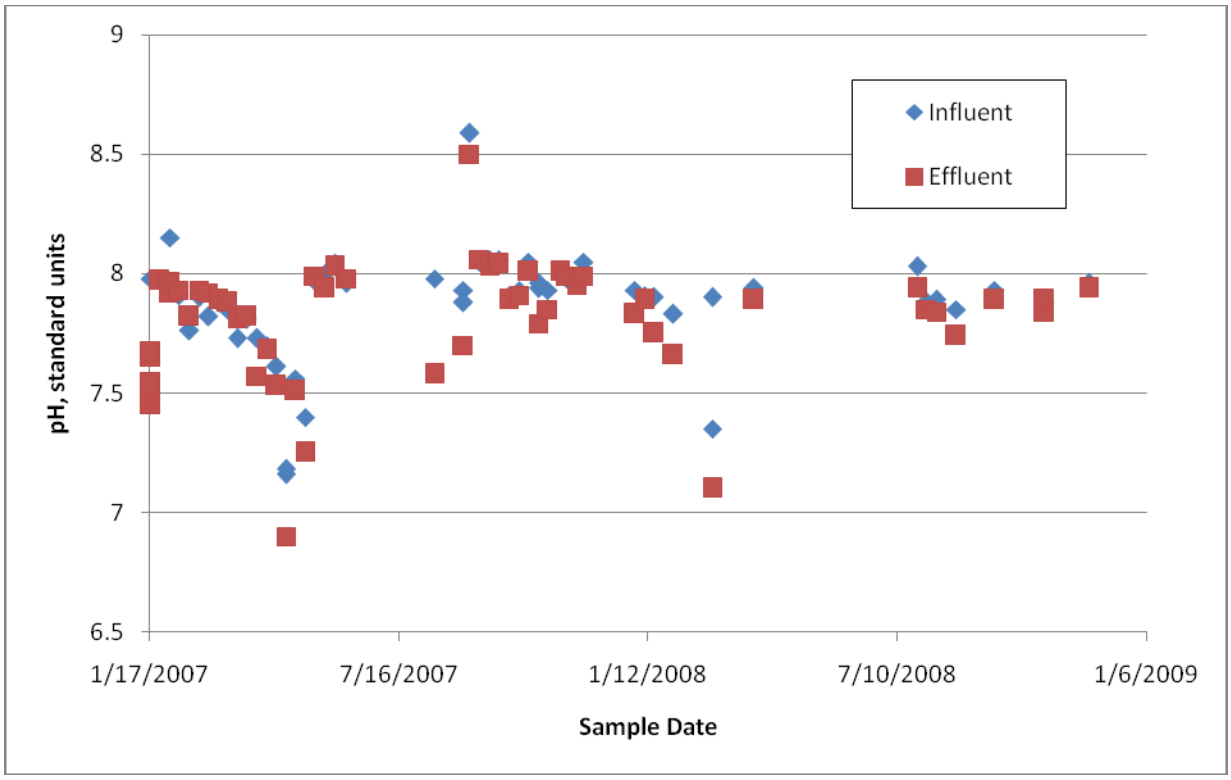

Figure 5-13. pH Changes across FWC Wellhead IX Treatment Unit

5.7.1.5 TDS – IX Unit Process

TDS concentration was measured periodically through four resin loading cycles at both influent and effluent locations of the IX wellhead treatment unit; detailed analytical results can be found in Appendix C. Influent TDS concentrations ranged from 160 to 330 mg/L with an average of 256 mg/L. Effluent TDS concentrations ranged from 150 to 330 mg/L with an average of 256 mg/L. Therefore, we can conclude that the IIX technology didn't significantly change the TDS of the treated water.

5.7.1.6 Total Organic Carbon (TOC) – IX Unit Process

TOC concentration was measured periodically through four resin loading cycles at both influent and effluent locations of the IX wellhead treatment unit; detailed analytical results can be found in Appendix C. 45 of the 48 influent TOC concentrations were below reporting limits. 47 of 50 effluent TOC concentrations were below reporting limits. TOC concentrations for the remaining influent and effluent samples are summarized in Table 5-14. The influent TOC concentrations are independent of the IX treatment process and detections are additionally not associated with any IX process change, e.g. resin change out. The 11/17/2007 effluent TOC detection is associated with installation of the virgin resin, though the association is not believed to be causal. The remaining effluent TOC detections were not associated with resin change out.

Table 5-14. Summary of Detectable Wellhead Treatment Unit TOC Concentrations

Sample Date	Location	Concentration; mg/L
5/30/2007	Influent	2.9
10/24/2007	Influent	0.3
10/30/2007	Influent	8.0
1/17/2007	Effluent	0.48
10/24/2007	Effluent	0.32
11/09/2007	Effluent	0.4

5.7.1.7 Chloride – IX Unit Process

Chloride concentration was measured periodically through four resin loading cycles at both influent and effluent locations of the IX wellhead treatment unit; detailed analytical results can be found in Appendix C. Influent chloride concentrations ranged from 11 to 14 mg/L with an average of 12 mg/L. Effluent chloride concentrations ranged from 11 to 100 mg/L. Chloride concentration during the first BVs after installing the resin for cycles one, two and three were elevated, as expected in IX systems:

- Ranging between 82-200 mg/L in cycle one
- 38 mg/L in cycle two, and
- 45 mg/L in cycle three.

Excluding these first sampling events after installing the resin, the effluent chloride concentration averaged 12 mg/L. This suggests that fresh resins do release chloride when first used but that virgin and regenerated resins were similar in this regard.

5.7.1.8 Fluoride – IX Unit Process

Fluoride concentration was measured periodically through four resin loading cycles at both influent and effluent locations of the IX wellhead treatment unit; detailed analytical results can be found in Appendix C. Influent fluoride concentrations ranged from 0.12 to 0.21 mg/L with an

average of 0.18 mg/L. Effluent chloride concentrations ranged from 0.14 to 0.22 mg/L with an average of 0.18 mg/L. As expected, IIX did not affect the fluoride concentration of the treated water.

5.7.1.9 Title 22 Metals and Major Cations – IX Unit Process

Title 22 of the California Code of Regulations sets MCLs for a number of inorganic contaminants in drinking water including aluminum (Al), antimony (Sb), arsenic (As), barium (Ba), beryllium (Be), cadmium (Cd), chromium (Cr), lead (Pb), mercury (Hg), nickel (Ni), selenium (Se), and thallium (Tl). In addition SMCLs are set for silver (Ag), copper (Cu), and zinc (Zn). These metals were periodically measured through four resin loading cycles at both influent and effluent locations of the IX wellhead treatment unit. Influent Title 22 metal results are summarized in Table 5-15. Effluent Title 22 metal results are summarized in Table 5-16.

In addition to the Title 22 metals, major cations were measured periodically through four resin loading cycles at both influent and effluent locations of the IX wellhead treatment unit. Calcium (Ca), magnesium (Mg), potassium (K), and sodium (Na) were monitored. These results are summarized in Table 5-17. Concentrations of the major cations were very similar in influent and effluent. This supports the claim that the A-530E resin has little effect on water chemistry.

Table 5-15. Influent Title 22 Metals at FWC Wellhead IX Treatment Unit

Date / Time	Field IX Loading Cycle	Number of BVs	Total Ag	Total Al	Total As	Total Ba	Total Be	Total Cd	Total Cr	Total Cu	Total Hg	Total Ni	Total Pb	Total Sb	Total Se	Total Tl	Total V	Total Zn
Unit:			µg/L	µg/L	µg/L	µg/L	µg/L	µg/L	µg/L	µg/L	µg/L	µg/L	µg/L	µg/L	µg/L	µg/L	µg/L	µg/L
1/17/07 16:01	Cycle 1	39	< 2.0		**0.75**	40	< 2.0	**3.3**	< 5.0	**11**	< 0.10	< 5.0	< 5.0	< 10	**72**	< 50	**9.3**	< 50
2/21/07 9:13	Cycle 1	60,236	< 2.0	**20**	< 10	42	< 2.0	**4.3**	< 5.0	**11**		< 5.0	< 5.0	< 10	< 30	< 50	**8.7**	< 50
3/21/07 10:49	Cycle 1	109,950	< 2.0		< 10	40	< 2.0	< 2.0	< 5.0	< 10	< 0.10	< 5.0	< 5.0	< 10	< 30	< 50	**9.7**	< 50
4/25/07 11:23	Cycle 1	178,890	< 0.20	< 5.0	**0.72**	43	< 0.10	< 0.10	**3.2**	**4.8**	< 0.10	< 0.80	**0.22**	< 0.50	**0.68**	< 0.20		**9.1**
4/25/07 11:23	Cycle 1	178,890	< 0.20	< 5.0	**0.72**	43	< 0.10	< 0.10	**3.2**	**4.0**	< 0.10	< 0.80	**0.22**	< 0.50	**0.64**	< 0.20		**6.5**
5/23/07 11:24	Cycle 1	234,143	< 0.20	**5.4**	**0.71**	42	< 0.10	< 0.10	**3.2**	**7.8**	< 0.10	< 0.80	**0.27**	< 0.50	**0.66**	< 0.20		**10**
8/10/07 16:45	Cycle 2	0	< 0.20	< 5.0	**0.65**	43	< 0.10	< 0.10	**3.0**	**1.4**	< 0.10	< 0.80	< 0.20	< 0.50	**0.61**	< 0.20		**6.4**
9/19/07 12:45	Cycle 2	59,218	< 0.20	< 5.0	**0.73**	45	< 0.10	< 0.10	**3.3**	**7.7**	< 0.10	< 0.80	**0.28**	< 0.50	**0.66**	< 0.20		**8.2**
10/17/07 13:05	Cycle 2	114,929	< 0.20	**5.2**	**0.70**	43	< 0.10	< 0.10	**3.1**	**14**	< 0.10	< 0.80	**0.36**	< 0.50	**0.61**	< 0.20		**13**
11/14/07 12:30	Cycle 2	177,050	< 0.20	**8.1**	**0.64**	43	< 0.10	< 0.10	**3.0**	**13**	< 0.10	< 0.80	**0.49**	< 0.50	**0.63**	< 0.20		**15**
11/14/07 12:30	Cycle 2	177,050	< 0.20	**8.3**	**0.59**	42	< 0.10	< 0.10	**3.1**	**8.8**		< 0.80	**0.38**	< 0.50	**0.50**	< 0.20		**9.7**
1/2/08 13:47	Cycle 3	0	< 0.20	**17**	**0.66**	42	< 0.10	< 0.10	**3.5**	**25**	< 0.10	< 0.80	**0.87**	< 0.50	**0.82**	< 0.20		**19**
1/30/08 8:07	Cycle 3	66,304	< 0.20	< 5.0	**0.63**	42	< 0.10	< 0.10	**2.9**	**19**	< 0.10	< 0.80	**0.41**	< 0.50	**0.64**	< 0.20		**7.9**
2/27/08 8:40	Cycle 3	134,028	< 0.20	< 5.0	**0.58**	39	< 0.10	< 0.10	**2.8**	**2.5**		< 0.80	< 0.20	< 0.50	< 0.40	< 0.20		**6.9**
3/28/08 11:00	Cycle 3	206,681	< 0.20	< 5.0	**0.80**	50	< 0.10	< 0.10	**3.5**	**14**		< 0.80	**0.58**	< 0.50	**0.75**	< 0.20		**8.6**
3/28/08 11:00	Cycle 3	206,681	< 0.20	< 5.0	**0.80**	50	< 0.10	< 0.10	**3.4**	**14**	< 0.10	< 0.80	**0.35**	< 0.50	**0.70**	< 0.20		**13**
7/24/08 11:30	Cycle 4	0			**0.70**													
8/21/08 11:42	Cycle 4	65,892	< 0.20	**22**	**0.80**	44	< 0.10	< 0.10	**3.4**	**8.7**	< 0.050	< 0.80	**0.59**	< 0.50	**0.78**	< 0.20		**10**
9/18/08 11:53	Cycle 4	132,286	< 0.20	< 5.0	**0.65**	42	< 0.10	< 0.10	**3.3**	**3.7**		< 0.80	< 0.20	< 0.50	**0.71**	< 0.20		**5.2**
10/24/08 11:40	Cycle 4	204,093	< 0.20	**5.2**	**0.65**	38	< 0.10	< 0.10	**3.3**	**5.0**	< 0.050	< 0.80	**0.23**	< 0.50	**0.65**	< 0.20		**9.8**
11/25/08 13:39	Cycle 4	263,504	< 0.20	**6.9**	**0.81**	42	< 0.10	< 0.10	**3.4**	**8.0**	< 0.050	< 0.80	**0.34**	< 0.50	**0.68**	< 0.20		**12**

Table 5-16. Effluent Title 22 Metals at FWC Wellhead IX Treatment Unit

Date / Time	Field IX Loading Cycle	Number of BVs	Total Ag	Total Al	Total As	Total Ba	Total Be	Total Cd	Total Cr	Total Cu	Total Hg	Total Ni	Total Pb	Total Sb	Total Se	Total Tl	Total V	Total Zn
Unit:			µg/L	µg/L	µg/L	µg/L	µg/L	µg/L	µg/L	µg/L	µg/L	µg/L	µg/L	µg/L	µg/L	µg/L	µg/L	µg/L
1/17/07 16:01	Cycle 1	39	< 2.0		< 0.40	**40**	< 2.0	**2.8**	< 5.0	**18**	< 0.10	< 5.0	< 5.0	< 10	**76**	< 50	< 5.0	< 50
2/21/07 9:13	Cycle 1	60,236	< 2.0	**8600**	< 10	**42**	< 2.0	**4.7**	< 5.0	**12**		< 5.0	< 5.0	< 10	< 30	< 50	**9.5**	< 50
3/21/07 10:49	Cycle 1	109,950	< 2.0		< 10	**40**	< 2.0	< 2.0	< 5.0	< 10	< 0.10	< 5.0	< 5.0	< 10	< 30	< 50	**10**	< 50
4/25/07 11:23	Cycle 1	178,890	< 0.20	< 5.0	**0.77**	**46**	< 0.10	< 0.10	**3.2**	**9.2**	< 0.10	< 0.80	**0.29**	< 0.50	**0.70**	< 0.20		**9.7**
5/23/07 11:24	Cycle 1	234,143	< 0.20	**47**	**0.73**	**43**	< 0.10	< 0.10	**3.3**	**19**	< 0.10	< 0.80	**0.49**	< 0.50	**0.70**	< 0.20		**15**
8/10/07 16:45	Cycle 2	0	< 0.20	**28**	< 0.40	**40**		< 0.10	**0.99**	**7.9**	< 0.10	**0.83**	**0.83**	**0.52**	< 0.40	< 0.20		**27**
9/19/07 12:45	Cycle 2	59,218	< 0.20	< 5.0	**0.70**	**45**	< 0.10	< 0.10	**3.2**	**10**	< 0.10	< 0.80	**0.35**	< 0.50	**0.73**	< 0.20		**10**
10/17/07 13:05	Cycle 2	114,929	< 0.20	**7.6**	**0.66**	**42**	< 0.10	< 0.10	**3.1**	**15**	< 0.10	< 0.80	**0.45**	< 0.50	**0.61**	< 0.20		**17**
11/14/07 12:30	Cycle 2	177,050	< 0.20	**7.9**	**0.64**	**45**	< 0.10	< 0.10	**3.1**	**15**	< 0.10	**0.80**	**0.51**	< 0.50	**0.77**	< 0.20		**20**
1/2/08 13:47	Cycle 3	0	< 0.20	< 5.0	< 0.40	**41**	< 0.10	< 0.10	< 0.20	**15**	< 0.10	< 0.80	**0.57**	< 0.50	< 0.40	< 0.20		**19**
1/30/08 8:07	Cycle 3	66,304	< 0.20	**11**	**0.63**	**44**	< 0.10	< 0.10	**3.0**	**11**	< 0.10	**0.97**	**0.41**	< 0.50	**0.63**	< 0.20		**19**
2/27/08 8:40	Cycle 3	134,028	< 0.20	< 5.0	**0.71**	**39**	< 0.10	< 0.10	**2.7**	**3.3**		< 0.80	< 0.20	< 0.50	< 0.40	< 0.20		**7.0**
3/28/08 11:00	Cycle 3	206,681	< 0.20	< 5.0	**0.78**	**50**	< 0.10	< 0.10	**3.3**	**23**		< 0.80	**0.74**	< 0.50	**0.83**	< 0.20		**16**
7/24/08 11:30	Cycle 4	0			< 0.40													
8/21/08 11:42	Cycle 4	65,892	< 0.20	**5.7**	**0.84**	**43**	< 0.10	< 0.10	**3.3**	**3.5**	< .050	< 0.80	< 0.20	< 0.50	**0.51**	< 0.20		**7.5**
9/18/08 11:53	Cycle 4	132,286	< 0.20	< 5.0	**0.68**	**41**	< 0.10	< 0.10	**3.2**	**9.6**		< 0.80	**0.30**	< 0.50	**0.90**	< 0.20		**9.8**
10/24/08 11:40	Cycle 4	204,093	< 0.20	**5.0**	**0.67**	**38**	< 0.10	< 0.10	**3.4**	**7.5**	< 0.050	< 0.80	**0.29**	< 0.50	**0.64**	< 0.20		**8.8**
10/24/08 11:40	Cycle 4	204,093	< 0.20	< 5.0	**0.65**	**38**	< 0.10	< 0.10	**3.3**	**7.6**	< 0.050	< 0.80	**0.31**	< 0.50	**0.64**	< 0.20		**8.6**
11/25/08 13:39	Cycle 4	263,504	< 0.20	**7.8**	**0.78**	**41**	< 0.10	< 0.10	**3.0**	**3.8**	< 0.050	< 0.80	**0.51**	< 0.50	**0.66**	< 0.20		**9.2**

Table 5-17. Major Cations at the FWC Wellhead IX Treatment Unit

Date / Time	Field IX Loading Cycle	Number of BVs	Influent Ca	Influent K	Influent Mg	Influent Na	Effluent Ca	Effluent K	Effluent Mg	Effluent Na
Unit:			mg/L	mg/L	mg/L	mg/L	mg/L	mg/L	mg/L	mg/L
4/25/07 11:23	Cycle 1	178,890	45	1.8		25	47	1.8		25
4/25/07 11:23	Cycle 1	178,890	46	1.8		26				
8/10/07 16:45	Cycle 2	0	45	1.8		25	45	1.8		25
9/19/07 12:45	Cycle 2	59,218	44	1.6		25	45	1.7		25
10/17/07 13:05	Cycle 2	114,929	46	1.9		25	46	1.9		25
11/14/07 12:30	Cycle 2	177,050	47	1.7		26	47	1.8		25
11/14/07 12:30	Cycle 2	177,050	47	1.8		26				
1/2/08 13:47	Cycle 3	0	48	1.8		26	48	1.8		26
1/30/08 8:07	Cycle 3	66,304	46	1.8		26	47	1.9		26
2/27/08 8:40	Cycle 3	134,028	46	1.8	9.8	25	46	1.7	9.7	24
3/28/08 11:00	Cycle 3	206,681	49	2.0		26	47	1.8		26
3/28/08 11:00	Cycle 3	206,681	48	1.9		26				
7/24/08 11:30	Cycle 4	0	48	1.7		25	47	2.0		24
9/18/08 11:53	Cycle 4	132,286	45	1.8		24	45	1.9		24
10/24/08 11:40	Cycle 4	204,093	47	1.8		21	48	2.0		22
10/24/08 11:40	Cycle 4	204,093					47	1.8		21
11/25/08 13:39	Cycle 4	263,504	47	2.0		25	46	1.9		25

Table 5-18. Accumulative Metals (As, Fe, Mn, and U) at FWC Wellhead IX Treatment Unit

			Influent								Effluent							
Date / Time	Field IX Loading Cycle	Number of BVs	Dissolved As	Total As	Dissolved Fe	Total Fe	Dissolved Mn	Total Mn	Dissolved U	Total U	Dissolved As	Total As	Dissolved Fe	Total Fe	Dissolved Mn	Total Mn	Dissolved U	Total U
Unit:			µg/L	µg/L	µg/L	µg/L	µg/L	µg/L	µg/L	µg/L	µg/L	µg/L	µg/L	µg/L	µg/L	µg/L	µg/L	µg/L
1/17/07 16:01	Cycle 1	39		**0.75**	**36**	< 20	**0.56**	**0.25**	**2.0**	**1.8**		< 0.40	< 20	< 20	< 0.20	< 0.20	< 0.20	< 0.20
2/21/07 9:13	Cycle 1	60,236		< 10	< 20	< 20	< 10	< 10	**1.5**	**1.6**		< 10	< 20	< 20	< 10	< 10	< 0.20	< 0.20
3/21/07 10:49	Cycle 1	109,950		< 10	< 20	< 20	< 10	< 10	**1.7**	**1.7**		< 10	< 20	< 20	< 10	< 10	**0.47**	**0.48**
4/25/07 11:23	Cycle 1	178,890	**0.67**	**0.72**	< 20	< 20	< 0.20	< 0.20	**1.9**	**1.9**	**0.71**	**0.77**	< 20	< 20	< 0.20	< 0.20	**1.4**	**1.4**
4/25/07 11:23	Cycle 1	178,890	**0.73**	**0.72**	< 20	< 20	< 0.20	< 0.20	**1.9**	**2.0**								
5/23/07 11:24	Cycle 1	234,143		**0.71**	< 20	< 20	< 10	< 0.20	**1.8**	**1.9**		**0.73**	< 20	< 20	< 10	< 0.20	**1.9**	**2.0**
8/10/07 16:45	Cycle 2	0		**0.65**	< 20	< 20	< 0.20	< 0.20	**2.0**	**2.1**		< 0.40	< 20	**92**	< 0.20	**0.75**	< 0.20	< 0.20
8/31/07 13:05	Cycle 2	20,252			< 20	< 20							< 20	< 20				
9/5/07 10:16	Cycle 2	30,295			< 20	< 20							< 20	< 20				
9/12/07 14:25	Cycle 2	44,970											< 20	< 20				
9/19/07 12:45	Cycle 2	59,218		**0.73**	< 20	< 20	< 0.20	< 0.20	**2.6**	**2.6**		**0.70**	< 20	< 20	< 0.20	< 0.20	**0.57**	**0.57**
10/17/07 13:05	Cycle 2	114,929		**0.70**	< 20	< 20	< 0.20	< 0.20	**2.2**	**2.2**		**0.66**	< 20	< 20	< 0.20	< 0.20	**1.7**	**1.6**
11/14/07 12:30	Cycle 2	177,050	< 0.64	**0.64**	< 20	< 20	< 5.0	**0.41**	**2.5**	**2.5**		**0.64**	< 20	< 20	< 5.0	< 0.20	**2.4**	**2.6**
11/14/07 12:30	Cycle 2	177,050		**0.59**	< 20	< 20	< 5.0	< 0.20	**2.5**	**2.5**								
1/2/08 13:47	Cycle 3	0		**0.66**	< 20	< 20	< 5.0	< 0.20	**2.3**	**2.3**		< 0.40	< 20	< 20	< 5.0	< 0.20	< 0.20	< 0.20
1/9/08 12:33	Cycle 3	16,991			< 20	< 20							< 20	< 20				
1/16/08 14:15	Cycle 3	33,680			< 20	< 20							< 20	< 20				
1/23/08 13:08	Cycle 3	50,139			< 20	< 20							< 20	< 20				
1/30/08 8:07	Cycle 3	66,304		**0.63**	< 20	< 20	< 0.20	< 0.20	**2.3**	**2.3**		**0.63**	< 20	**40**	< 0.20	**0.40**	**1.1**	**1.1**
2/27/08 8:40	Cycle 3	134,028		**0.58**	< 20	< 20	< 0.20	< 0.20	**2.4**	**2.4**		**0.71**	< 20	< 20	< 0.20	< 0.20	**2.2**	**2.2**
3/28/08 11:00	Cycle 3	206,681		**0.80**	< 20	< 20	< 0.20	< 0.20	**2.6**	**2.6**		**0.78**	< 20	< 20	< 0.20	< 0.20	**2.5**	**2.7**
3/28/08 11:00	Cycle 3	206,681		**0.80**	< 20	< 20	**0.37**	< 0.20	**2.7**	**2.6**								
7/24/08 11:30	Cycle 4	0		**0.70**	< 20	< 10	< 0.20	**1.8**	**2.6**			< 0.40	< 20	< 10	< 0.20	< 0.20	< 0.20	
7/31/08 11:43	Cycle 4	16,503			< 20	< 10							< 20	< 10				
8/7/08 8:41	Cycle 4	32,575			< 20	< 10							< 20	< 10				
8/14/08 12:09	Cycle 4	49,414			< 20	< 10							< 20	< 10				
8/21/08 11:42	Cycle 4	65,892		**0.80**	< 20		< 0.20	**7.0**	**2.1**	**2.2**		**0.84**	< 20		< 0.20	< 0.20	**1.1**	**1.1**
9/18/08 11:53	Cycle 4	132,286		**0.65**	< 20	< 10	< 5.0	< 0.20	**2.3**	**2.2**		**0.68**	< 20	< 10	< 5.0	< 0.20	**2.2**	**2.1**
10/24/08 11:40	Cycle 4	204,093		**0.65**	< 20	< 10	< 0.20	< 0.20	**1.8**	**1.8**		**0.67**	< 20	< 10	< 0.20	< 0.20	**1.8**	**1.9**
10/24/08 11:40	Cycle 4	204,093										**0.65**	< 20	< 10	< 0.20	< 0.20	**1.8**	**1.8**
11/25/08 13:39	Cycle 4	263,504		**0.81**	< 20	< 10	< 0.20	< 0.20	**2.0**	**2.1**		**0.78**	< 20	< 10	< 0.20	< 0.20	**2.3**	**2.4**

5.7.1.10 Dissolved Iron – IX Unit Process

Dissolved iron concentration was measured periodically through four resin loading cycles at both influent and effluent locations of the IX wellhead treatment unit; detailed analytical results can be found in Table 5-18 and Appendix C. The first influent dissolved iron sample on starting field treatment with virgin resin contained 36 µg/L dissolved iron; remaining influent samples were below the reporting limit of 20 µg/L. Effluent dissolved iron concentrations were below the reporting limit of 20 µg/L through all four wellhead treatment cycles. This suggests that although the regeneration technology involves iron, the regenerated resin is not adding a significant amount of iron to the treated water.

5.7.1.11 Total Iron – IX Unit Process

Total iron concentration was measured periodically through four resin loading cycles at both influent and effluent locations of the IX wellhead treatment unit; detailed analytical results can be found in Table 5-18 and Appendix C. Influent total iron concentrations remained below reporting limits throughout the demonstration. Total iron in effluent samples were also below reporting limits with two exceptions: 92 µg/L at the start of the second loading cycle and 40 µg/L during the third loading cycle. These values are well below the secondary MCL for iron of 300 µg/L. This suggests that although the regeneration technology involves iron, the regenerated resin is normally not adding a significant amount of iron to the treated water.

5.7.1.12 Dissolved Manganese – IX Unit Process

Dissolved manganese concentration was measured periodically through four resin loading cycles at both influent and effluent locations of the IX wellhead treatment unit; detailed analytical results can be found in Table 5-18 and Appendix C. Influent dissolved manganese was largely below reporting limits; two influent samples contained quantifiable manganese at less than 1 µg/L. No dissolved manganese was detected in the effluent four wellhead treatment cycles.

5.7.1.13 Total Manganese – IX Unit Process

Total manganese concentration was measured periodically through four resin loading cycles at both influent and effluent locations of the IX wellhead treatment unit; detailed analytical results can be found in Table 5-18 and Appendix C. Influent total manganese concentrations ranged from below reporting limits of 0.20 µg/L to 7.0 µg/L throughout the demonstration; total manganese was typically below reporting limits with occasional detectable concentrations. Total manganese in effluent samples was also below reporting limits with two exceptions: 0.75 µg/L at the start of the second loading cycle and 0.40 µg/L during the third loading cycle. These values were well below the EPA secondary MCL for manganese of 50 µg/L.

5.7.1.14 Dissolved Uranium – IX Unit Process

Dissolved uranium concentration was measured periodically through four resin loading cycles at both influent and effluent locations of the IX wellhead treatment unit; detailed analytical results

can be found in Table 5-18 and Appendix C. Influent dissolved uranium concentrations ranged from 1.5 to 2.7 µg/L, average influent dissolved uranium concentrations, excluding duplicates, was 2.2 µg/L. Effluent dissolved uranium concentrations were initially below reporting limits, < 0.20 µg/L upon startup, with both virgin resin and regenerated resin. Effluent dissolved uranium concentrations rose to roughly equal influent levels before perchlorate saturation occurred for each treatment cycle. This indicates, as expected, that the IX resin removes the uranite anion, and further suggests that uranite reaches saturation before perchlorate. In later sections we will discuss removal of this uranium from the resin in regeneration.

5.7.1.15 Total Uranium – IX Unit Process

Total uranium concentration was measured periodically through four resin loading cycles at both influent and effluent locations of the IX wellhead treatment unit; detailed analytical results can be found in Table 5-18 and Appendix C. Influent total uranium concentrations ranged from 1.6 to 2.6 µg/L, average influent total uranium concentrations, excluding duplicates, was 2.2 µg/L. Effluent total uranium concentrations were initially below reporting limits, 0.20 µg/L, upon startup with both virgin resin and regenerated resin. Effluent dissolved uranium concentrations rose to nominally influent levels before perchlorate saturation occurred for each treatment cycle. This indicates, as expected, that the IX resin removes the uranite anion, and further suggests that uranite reaches saturation before perchlorate. In later sections we will discuss removal of this uranium from the resin in regeneration.

5.7.1.16 Total Arsenic – IX Unit Process

Total arsenic concentration was measured periodically through four resin loading cycles at both influent and effluent locations of the IX wellhead treatment unit; detailed analytical results can be found in Table 5-18 and Appendix C. Influent total arsenic concentrations ranged from 0.58 to 0.81 µg/L throughout the demonstration; average influent total arsenic concentration was 0.70 µg/L. Total arsenic concentration in effluent samples ranged from below reporting limits of 0.00 µg/L to 0.84 µg/L. These concentrations can be compared to the arsenic MCL of 10 µg/L. Effluent total arsenic was below the reporting limit upon startup with both virgin and regenerated resin and rose to nominally influent concentrations before perchlorate saturation occurred. This suggests that the system initially removes arsenite anion and does not add significant amounts of total arsenic to the treated water.

5.7.1.17 Gross Alpha – IX Unit Process

Gross alpha radiation was measured periodically through four resin loading cycles at both influent and effluent locations of the IX wellhead treatment unit; detailed analytical results can be found in Table 5-19 and Appendix C. Influent gross alpha radiation was between 0 and 8.4 pCi/L; average influent gross alpha radiation, excluding duplicates, was 3.0 pCi/L. Effluent gross alpha radiation was between 0 and 9.5 pCi/L; average gross alpha radiation, excluding duplicates, was 1.9 pCi/L. The decrease in gross alpha radiation is attributed to uranium removal by the resin.

5.7.1.18 Radon – IX Unit Process

Radon was measured periodically through four resin loading cycles at both influent and effluent locations of the IX wellhead treatment unit; detailed analytical results can be found in Table 5-19 and Appendix C. Influent radon ranged from < 75 to 163 pCi/L; median influent radon concentration was 126 pCi/L (median was selected here as the measure of central tendency because the data set contained nondetects). Effluent radon ranged from < 75 to 214 pCi/L; median effluent radon concentration was 115 pCi/L. This suggests that the IIX technology has little effect on Radon levels.

Table 5-19. Radiation Related Analytes at FWC Wellhead IX Treatment Unit

Date / Time		Number of BVs	Influent		Effluent	
			Gross Alpha	Radon	Gross Alpha	Radon
Unit:			pCi/L	pCi/L	pCi/L	pCi/L
1/17/07 16:01	Cycle 1	39	1.0		0.0	
2/21/07 9:13	Cycle 1	60,236	0.0		0.0	
2/22/07 12:37	Cycle 1	62,084		87		115
3/21/07 10:49	Cycle 1	109,950	2.3	102	1.5	79
4/25/07 11:23	Cycle 1	178,890	1.4		0.58	
4/25/07 11:23	Cycle 1	178,890	2.2			
5/23/07 11:24	Cycle 1	234,143	1.9		3.1	
5/30/07 11:08	Cycle 1	249,116		139		214
8/10/07 16:45	Cycle 2	0	6.5	133	0	200
9/19/07 12:45	Cycle 2	59,218	3.4		0	
10/17/07 13:05	Cycle 2	114,929	0.63		4.9	
10/19/07 9:44	Cycle 2	119,160		< 75		85
11/14/07 12:30	Cycle 2	177,050	4.0		3.4	
11/14/07 12:30	Cycle 2	177,050	3.1			
1/2/08 13:47	Cycle 3	0	8.0		2.3	
1/30/08 8:07	Cycle 3	66,304	8.4		9.5	
2/27/08 8:40	Cycle 3	134,028	5.2	< 75	3.4	< 75
3/28/08 11:00	Cycle 3	206,681	4.2		4.6	
3/28/08 11:00	Cycle 3	206,681	5.0			
7/24/08 11:30	Cycle 4	0	4.2		0.14	
8/21/08 11:42	Cycle 4	65,892	0.0	163	1.6	196
9/18/08 11:53	Cycle 4	132,286	0.44		0	
9/25/08 7:02	Cycle 4	148,250		126		< 75
10/24/08 11:40	Cycle 4	204,093	0.73	143	0.30	149
10/24/08 11:40	Cycle 4	204,093			0.59	

11/25/08 13:39	Cycle 4	263,504	0.0		0	

5.7.1.19 VOCs – IX Unit Process

VOCs were measured periodically through four resin loading cycles at both influent and effluent locations of the IX wellhead treatment unit; detailed analytical results can be found Appendix C. Influent VOC concentrations for the full 524.2 list were below reporting limits in all samples. Effluent VOC concentrations were also below reporting limits with two exceptions: the 08/10/2007 sample at the start of the second loading cycle and the 11/25/2008 sample at the end of the fourth loading cycle. The 08/10/2007 effluent sample contained 61 µg/L total VOCs including chloroform, carbon tetrachloride, dibromochloromethane, bromodichloromethane, bromoform trichloroethene, and 1,1-dichloroethene; chloroform accounts for 47 µg/L, a majority of the total VOCs. The MCL for total trihalomethanes is 80 µg/L. The 11/25/2008 sample contained 11 µg/L 2-butanone. These results are compared to the available MCLs and to EPA Regional risk screening levels in Table 5-20. In one case the California MCL for carbon tetrachloride was exceeded but the national MCL was not exceeded. The potential sources of these VOCs in the regeneration process will be discussed in later sections.

Table 5-20. Effluent VOCs In the Only Two Samples that Had Detections, Compared to Regulatory and Risk Screening Levels (Detected Values Bold, Exceedances of MCLs Shaded Red)

	Bromodichloromethane	Bromoform	2-Butanone	Carbon tetrachloride	Chloroform	Dibromochloromethane	1,1-Dichloroethene	Trichlorethene	Total Trihalomethanes
	ug/l	ug/l	ug/l	ug/l	ug/l	ug/l	ug/l	ug/l	ug/l
IX Effluent 8/10/2007	**3.3**	**1.4**	<5.0	**4**	**47**	**3.4**	**0.5**	**1.4**	**61**
IX Effluent 11/25/2008	<0.5	<0.5	**11**	<0.5	<0.5	<0.5	<0.5	<0.5	**11**
U.S. EPA MCL				5			7	5	80
California MCL				0.5			6	5	80
EPA regional risk screening level	0.12	8.5		0.2	0.19	0.15	340	1.7	

5.7.1.20 SVOCs and Pesticides – IX Unit Process

SVOCs and pesticides were measured periodically through startup of the third resin loading cycles at both influent and effluent locations of the IX wellhead treatment unit; detailed analytical results can be found Appendix C. No SVOCs or Pesticides were found above the reporting limit for any influent or effluent sample. Beginning with the third cycle of IX monitoring of these COCs was discontinued after discussion with ESTCP.

5.7.1.21 Nitrosamine Monitoring – IX Unit Process

Nitrosamines were monitored periodically through startup and four resin loading cycles at both influent and effluent locations of the IX wellhead treatment unit. Nitrosamine monitoring during resin backwash prior to startup is summarized in Table 5-21. Influent nitrosamine monitoring during wellhead treatment is summarized in Table 5-22. Effluent nitrosamine monitoring during wellhead treatment is summarized in Table 5-23.

During startup with virgin resin, the wellhead treatment unit was back-flushed with several bed volumes of water; nitrosamine concentrations during the back-flush are summarized in Table 5-21. NDMA concentrations were elevated, 270 ng/L, in the initial effluent sample, but quickly returned to levels comparable to the influent NDMA concentration. NMOR was detected in both the influent and effluent of the back-flush. NPIP was detected in the initial effluent sample of the back-flush as well. The observation of nitrosamines in treated effluent on startup is common in IX systems (but it is dependent on the functional group of the resin).

Nitrosamines in the influent water were typically below reporting limits of 2.0 ng/L (Table 5-9). However, the first influent nitrosamine sample collected upon starting wellhead treatment contained 11 ng/L of NDMA. The 02/27/2008 influent sample contained 38 ng/L of NDMA. The next nitrosamine sample contained smaller concentrations of NDMA, 3.8 ng/L, and 8.8 ng/L NMOR.

Nitrosamines in the effluent water were typically below reporting limits of 2.0 ng/L (Table 5-23). Effluent was intensively sampled during startup of the wellhead treatment system with virgin resin during the first loading cycle; NDMA was found in effluent samples through the first 39 BVs and NDEA was found in the first effluent sample at 2.6 BVs. Effluent was intensively sampled during the startup with regenerated resin in the third and fourth loading cycles as well resulting in a single low-level detection of NDMA at 55 BVs from the third loading cycle. NDMA was detected in two additional effluent samples, both during the third loading cycle. NMOR was detected in one effluent samples during the third loading cycle. NDBA was detected in three effluent samples during the fourth loading cycle.

Table 5-21. Nitrosamine Concentrations during Back-flush at FWC Wellhead IX Treatment Unit Prior to Startup.

Sample ID	N-Nitrosodimethylamine	N-Nitrosomethylethylamine	N-Nitrosodiethylamine	N-Nitrosodi-n-propylamine	N-Nitrosomorpholine	N-Nitrosopyrrolidine	N-Nitrosopiperidine	N-Nitrosodi-n-butylamine
	ng/L	ng/L	ng/L	ng/L	ng/L	ng/L	ng/L	ng/L
Influent	**15**	< 2.0	< 2.0	< 2.0	**2.3**	< 2.0	< 2.0	< 2.0
Backwash Bed Volume Zero	**270**	< 2.0	< 2.0	< 2.0	< 2.0	< 2.0	**29**	< 2.0
Backwash Bed Volume One	**15**	< 2.0	< 2.0	< 2.0	**7.0**	< 2.0	< 2.0	< 2.0
Backwash Bed Volume four	**11**	< 2.0	< 2.0	< 2.0	< 2.0	< 2.0	< 2.0	< 2.0

Table 5-22. Influent Nitrosamine Concentrations at FWC Wellhead IX Treatment Unit

Date / Time	Bed size	Number of BVs	N-Nitrosodimethylamine	N-Nitrosomethylethylamine	N-Nitrosodiethylamine	N-Nitrosodi-n-propylamine	N-Nitrosomorpholine	N-Nitrosopyrrolidine	N-Nitrosopiperidine	N-Nitrosodi-n-butylamine
Unit:	(Gallons)		ng/L	ng/L	ng/L	ng/L	ng/L	ng/L	ng/L	ng/L
1/17/07 16:01	Cycle 1	39	**11**	< 2.0	< 2.0	< 2.0	< 2.0	< 2.0	< 2.0	< 2.0
1/31/07 11:20	Cycle 1	25,231	< 2.0	< 2.0	< 2.0	< 2.0	< 2.0	< 2.0	< 2.0	< 2.0
2/14/07 9:45	Cycle 1	50,974	< 2.0	< 2.0	< 2.0	< 2.0	< 2.0	< 2.0	< 2.0	< 2.0
2/28/07 10:59	Cycle 1	71,248	< 2.0	< 2.0	< 2.0	< 2.0	< 2.0	< 2.0	< 2.0	< 2.0
3/14/07 9:57	Cycle 1	96,689	< 2.0	< 2.0	< 2.0	< 2.0	< 2.0	< 2.0	< 2.0	< 2.0
3/28/07 10:13	Cycle 1	122,719	< 2.0	< 2.0	< 2.0	< 2.0	< 2.0	< 2.0	< 2.0	< 2.0
4/11/07 10:20	Cycle 1	151,169	< 2.0	< 2.0	< 2.0	< 2.0	< 2.0	< 2.0	< 2.0	< 2.0
4/25/07 11:23	Cycle 1	178,890	< 2.0	< 2.0	< 2.0	< 2.0	< 2.0	< 2.0	< 2.0	< 2.0
4/25/07 11:23	Cycle 1	178,890	< 2.0	< 2.0	< 2.0	< 2.0	< 2.0	< 2.0	< 2.0	< 2.0
5/9/07 10:00	Cycle 1	207,542	< 2.0	< 2.0	< 2.0	< 2.0	< 2.0	< 2.0	< 2.0	< 2.0
5/23/07 11:24	Cycle 1	234,143	< 2.0	< 2.0	< 2.0	< 2.0	< 2.0	< 2.0	< 2.0	< 2.0
6/8/07 11:08	Cycle 1	267,967	< 2.0	< 2.0	< 2.0	< 2.0	< 2.0	< 2.0	< 2.0	< 2.0
8/10/07 16:45	Cycle 2	0	< 2.0	< 2.0	< 2.0	< 2.0	< 2.0	< 2.0	< 2.0	< 2.0
9/5/07 10:16	Cycle 2	30,295	< 2.0	< 2.0	< 2.0	< 2.0	< 2.0	< 2.0	< 2.0	< 2.0
9/19/07 12:45	Cycle 2	59,218	< 2.0	< 2.0	< 2.0	< 2.0	< 2.0	< 2.0	< 2.0	< 2.0
10/3/07 12:50	Cycle 2	83,238	< 2.0	< 2.0	< 2.0	< 2.0	< 2.0	< 2.0	< 2.0	< 2.0
10/17/07 13:05	Cycle 2	114,929	< 2.0	< 2.0	< 2.0	< 2.0	< 2.0	< 2.0	< 2.0	< 2.0
10/31/07 11:33	Cycle 2	147,346	< 2.0	< 2.0	< 2.0	< 2.0	< 2.0	< 2.0	< 2.0	< 2.0
11/14/07 12:30	Cycle 2	177,050	< 2.0	< 2.0	< 2.0	< 2.0	< 2.0	< 2.0	< 2.0	< 2.0
11/14/07 12:30	Cycle 2	177,050	< 2.0	< 2.0	< 2.0	< 2.0	< 2.0	< 2.0	< 2.0	< 2.0
	Cycle 2	201,942	< 2.0	< 2.0	< 2.0	< 2.0	< 2.0	< 2.0	< 2.0	< 2.0
1/2/08 13:47	Cycle 3	0	< 2.0	< 2.0	< 2.0	< 2.0	< 2.0	< 2.0	< 2.0	< 2.0
1/16/08 14:15	Cycle 3	33,680	< 2.0	< 2.0	< 2.0	< 2.0	< 2.0	< 2.0	< 2.0	< 2.0
1/30/08 8:07	Cycle 3	66,304	< 2.0	< 2.0	< 2.0	< 2.0	< 2.0	< 2.0	< 2.0	< 2.0
2/27/08 8:40	Cycle 3	134,028	**32**	< 2.0	< 2.0	< 2.0	< 2.0	< 2.0	< 2.0	< 2.0
3/28/08 11:00	Cycle 3	206,681	**3.8**	< 2.0	< 2.0	< 2.0	**8.8**	< 2.0	< 2.0	< 2.0
3/28/08 11:00	Cycle 3	206,681	**2.4**	< 2.0	< 2.0	< 2.0	**9.6**	< 2.0	< 2.0	< 2.0
7/24/08 11:30	Cycle 4	0	< 2.0	< 2.0	< 2.0	< 2.0	< 2.0	< 2.0	< 2.0	**2.0**
7/24/08 11:35	Cycle 4	8	< 2.0	< 2.0	< 2.0	< 2.0	< 2.0	< 2.0	< 2.0	< 2.0
8/7/08 8:41	Cycle 4	32,575	< 2.0	< 2.0	< 2.0	< 2.0	< 2.0	< 2.0	< 2.0	< 2.0
8/21/08 11:42	Cycle 4	65,892	< 2.0	< 2.0	< 2.0	< 2.0	< 2.0	< 2.0	< 2.0	< 2.0
9/4/08 9:35	Cycle 4	98,773	< 2.0	< 2.0	< 2.0	< 2.0	< 2.0	< 2.0	< 2.0	< 2.0
9/18/08 11:53	Cycle 4	132,286	< 2.0	< 2.0	< 2.0	< 2.0	< 2.0	< 2.0	< 2.0	< 2.0
10/2/08 9:27	Cycle 4	164,794	< 2.0	< 2.0	< 2.0	< 2.0	< 2.0	< 2.0	< 2.0	< 2.0
10/24/08 11:40	Cycle 4	204,093	< 2.0	< 2.0	< 2.0	< 2.0	< 2.0	< 2.0	< 2.0	< 2.0
11/25/08 13:39	Cycle 4	263,504	< 2.0	< 2.0	< 2.0	< 2.0	< 2.0	< 2.0	< 2.0	< 2.0

Table 5-23. Effluent Nitrosamine Concentrations at FWC Wellhead IX Treatment Unit

Date / Time	Bed size	Number of BVs	N-Nitrosodimethylamine	N-Nitrosomethylethylamine	N-Nitrosodiethylamine	N-Nitrosodi-n-propylamine	N-Nitrosomorpholine	N-Nitrosopyrrolidine	N-Nitrosopiperidine	N-Nitrosodi-n-butylamine
Unit:	(Gallons)		ng/L	ng/L	ng/L	ng/L	ng/L	ng/L	ng/L	ng/L
1/17/07 15:31	Cycle 1	2.6	**130**	< 2.0	**3.3**	< 2.0	< 2.0	< 2.0	< 2.0	< 2.0
1/17/07 15:32	Cycle 1	4.8	**83**	< 2.0	< 2.0	< 2.0	< 2.0	< 2.0	< 2.0	< 2.0
1/17/07 15:34	Cycle 1	6.9	**61**	< 2.0	< 2.0	< 2.0	< 2.0	< 2.0	< 2.0	< 2.0
1/17/07 15:35	Cycle 1	10	**140**	< 2.0	< 2.0	< 2.0	< 2.0	< 2.0	< 2.0	< 2.0
1/17/07 15:39	Cycle 1	17	**41**	< 2.0	< 2.0	< 2.0	< 2.0	< 2.0	< 2.0	< 2.0
1/17/07 15:51	Cycle 1	26	**43**	< 2.0	< 2.0	< 2.0	< 2.0	< 2.0	< 2.0	< 2.0
1/17/07 16:01	Cycle 1	39	**16**	< 2.0	< 2.0	< 2.0	< 2.0	< 2.0	< 2.0	< 2.0
1/31/07 11:20	Cycle 1	25,231	< 2.0	< 2.0	< 2.0	< 2.0	< 2.0	< 2.0	< 2.0	< 2.0
2/14/07 9:45	Cycle 1	50,974	< 2.0	< 2.0	< 2.0	< 2.0	< 2.0	< 2.0	< 2.0	< 2.0
2/28/07 10:59	Cycle 1	71,248	< 2.0	< 2.0	< 2.0	< 2.0	< 2.0	< 2.0	< 2.0	< 2.0
3/14/07 9:57	Cycle 1	96,689	< 2.0	< 2.0	< 2.0	< 2.0	< 2.0	< 2.0	< 2.0	< 2.0
3/28/07 10:13	Cycle 1	122,719	< 2.0	< 2.0	< 2.0	< 2.0	< 2.0	< 2.0	< 2.0	< 2.0
4/11/07 10:20	Cycle 1	151,169	< 2.0	< 2.0	< 2.0	< 2.0	< 2.0	< 2.0	< 2.0	< 2.0
4/25/07 11:23	Cycle 1	178,890	< 2.0	< 2.0	< 2.0	< 2.0	< 2.0	< 2.0	< 2.0	< 2.0
5/9/07 10:00	Cycle 1	207,542	< 2.0	< 2.0	< 2.0	< 2.0	< 2.0	< 2.0	< 2.0	< 2.0
5/23/07 11:24	Cycle 1	234,143	< 2.0	< 2.0	< 2.0	< 2.0	< 2.0	< 2.0	< 2.0	< 2.0
6/8/07 11:08	Cycle 1	267,967	< 2.0	< 2.0	< 2.0	< 2.0	< 2.0	< 2.0	< 2.0	< 2.0
8/10/07 16:45	Cycle 2	0	< 2.0	< 2.0	< 2.0	< 2.0	< 2.0	< 2.0	< 2.0	< 2.0
9/5/07 10:16	Cycle 2	30,295	< 2.0	< 2.0	< 2.0	< 2.0	< 2.0	< 2.0	< 2.0	< 2.0
9/19/07 12:45	Cycle 2	59,218	< 2.0	< 2.0	< 2.0	< 2.0	< 2.0	< 2.0	< 2.0	< 2.0
10/3/07 12:50	Cycle 2	83,238	< 2.0	< 2.0	< 2.0	< 2.0	< 2.0	< 2.0	< 2.0	< 2.0
10/17/07 13:05	Cycle 2	114,929	< 2.0	< 2.0	< 2.0	< 2.0	< 2.0	< 2.0	< 2.0	< 2.0
10/31/07 11:33	Cycle 2	147,346	< 2.0	< 2.0	< 2.0	< 2.0	< 2.0	< 2.0	< 2.0	< 2.0
11/14/07 12:30	Cycle 2	177,050	< 2.0	< 2.0	< 2.0	< 2.0	< 2.0	< 2.0	< 2.0	< 2.0
11/26/07 11:25	Cycle 2	201,942	< 2.0	< 2.0	< 2.0	< 2.0	< 2.0	< 2.0	< 2.0	< 2.0
1/2/08 13:47	Cycle 3	0	< 2.0	< 2.0	< 2.0	< 2.0	< 2.0	< 2.0	< 2.0	< 2.0
1/2/08 13:52	Cycle 3	9	< 2.0	< 2.0	< 2.0	< 2.0	< 2.0	< 2.0	< 2.0	< 2.0
1/2/08 13:57	Cycle 3	18	< 2.0	< 2.0	< 2.0	< 2.0	< 2.0	< 2.0	< 2.0	< 2.0
1/2/08 14:17	Cycle 3	55	**2.3**	< 2.0	< 2.0	< 2.0	< 2.0	< 2.0	< 2.0	< 2.0
1/9/08 12:33	Cycle 3	16,991	< 2.0	< 2.0	< 2.0	< 2.0	< 2.0	< 2.0	< 2.0	< 2.0
1/16/08 14:15	Cycle 3	33,680	< 2.0	< 2.0	< 2.0	< 2.0	< 2.0	< 2.0	< 2.0	< 2.0
1/30/08 8:07	Cycle 3	66,304	< 2.0	< 2.0	< 2.0	< 2.0	< 2.0	< 2.0	< 2.0	< 2.0
2/27/08 8:40	Cycle 3	134,028	**10**	< 2.0	< 2.0	< 2.0	< 2.0	< 2.0	< 2.0	< 2.0

Date / Time	Bed size	Number of BVs	N-Nitrosodimethylamine	N-Nitrosomethylethylamine	N-Nitrosodiethylamine	N-Nitrosodi-n-propylamine	N-Nitrosomorpholine	N-Nitrosopyrrolidine	N-Nitrosopiperidine	N-Nitrosodi-n-butylamine
3/28/08 11:00	Cycle 3	206,681	**4**	< 2.0	< 2.0	< 2.0	**41**	< 2.0	< 2.0	< 2.0
7/24/08 11:30	Cycle 4	0	< 2.0	< 2.0	< 2.0	< 2.0	< 2.0	< 2.0	< 2.0	**2.1**
7/24/08 11:35	Cycle 4	8	< 2.0	< 2.0	< 2.0	< 2.0	< 2.0	< 2.0	< 2.0	< 2.0
7/24/08 11:50	Cycle 4	32	< 2.0	< 2.0	< 2.0	< 2.0	< 2.0	< 2.0	< 2.0	< 2.0
7/28/08 9:49	Cycle 4	9,073	< 2.0	< 2.0	< 2.0	< 2.0	< 2.0	< 2.0	< 2.0	**2.3**
7/31/08 11:43	Cycle 4	16,503	< 2.0	< 2.0	< 2.0	< 2.0	< 2.0	< 2.0	< 2.0	**2.3**
8/7/08 8:41	Cycle 4	32,575	< 2.0	< 2.0	< 2.0	< 2.0	< 2.0	< 2.0	< 2.0	< 2.0
8/21/08 11:42	Cycle 4	65,892	< 2.0	< 2.0	< 2.0	< 2.0	**2.1UB**	< 2.0	< 2.0	< 2.0
9/4/08 9:35	Cycle 4	98,773	< 2.0	< 2.0	< 2.0	< 2.0	< 2.0	< 2.0	< 2.0	< 2.0
9/18/08 11:53	Cycle 4	132,286	< 2.0	< 2.0	< 2.0	< 2.0	< 2.0	< 2.0	< 2.0	< 2.0
10/2/08 9:27	Cycle 4	164,794	< 2.0	< 2.0	< 2.0	< 2.0	< 2.0	< 2.0	< 2.0	< 2.0
10/2/08 9:27	Cycle 4	164,794	< 2.0	< 2.0	< 2.0	< 2.0	< 2.0	< 2.0	< 2.0	< 2.0
10/24/08 11:40	Cycle 4	204,093	< 2.0	< 2.0	< 2.0	< 2.0	< 2.0	< 2.0	< 2.0	< 2.0
10/24/08 11:40	Cycle 4	204,093	< 2.0	< 2.0	< 2.0	< 2.0	< 2.0	< 2.0	< 2.0	< 2.0
11/25/08 13:39	Cycle 4	263,504	< 2.0	< 2.0	< 2.0	< 2.0	< 2.0	< 2.0	< 2.0	< 2.0

UB – Non-detect due to blank contamination

5.7.2 Regeneration Unit Process Sampling Results

The resin from the wellhead treatment process was shipped in the treatment vessel to Calgon's Pittsburgh facility for regeneration. Regeneration was performed after the first, second, and third treatment cycles. Regeneration is a multi–step process including a deionized (DI) backwash, a dilute acid backwash, transfer to regeneration vessel, regeneration with tetrachloroferrate, a dilute acid rinse, a DI water rinse, a nontoxic inorganic substance rinse, a final DI rinse and transfer back to the treatment vessel. The entire resin bed shipped from Fontana was regenerated. The volume of resin varied from 115 to 107 gallons on a chloride exchanged basis, the form shipped for wellhead perchlorate treatment.

5.7.2.1 Perchlorate - Regeneration Process

5.7.2.1.1 Perchlorate Elution during Initial Backwashes and rinses

The DI backwash effluent was sampled every 10 minutes for 1 hour and analyzed for perchlorate, chloride, nitrate, and sulfate. During the first regeneration, no perchlorate was detected from the DI backwash above the reporting limit of 2.5 µg/L. During the second regeneration, the fourth DI backwash sample contained 2.9 µg/L perchlorate; the remaining

samples contained no perchlorate above the reporting limit of 2.5 µg/L. During the third regeneration cycle, the DI backwash effluent samples averaged 8.44 µg/L.

Dilute acid was used in a subsequent backwash event, before transferring resin to the regeneration vessel in the first and second cycle and after transferring resin in the third regeneration cycle. Perchlorate elution during the dilute acid backwashes is shown in Figure 5-14 based on grab samples during each regeneration cycle. For each regeneration event, small levels of perchlorate eluted from the resin bed during the dilute acid backwash. Perchlorate elution from the first regeneration appears to be confounded with a dilution of the dilute acid feed as discussed in Section 5.7.2.4.

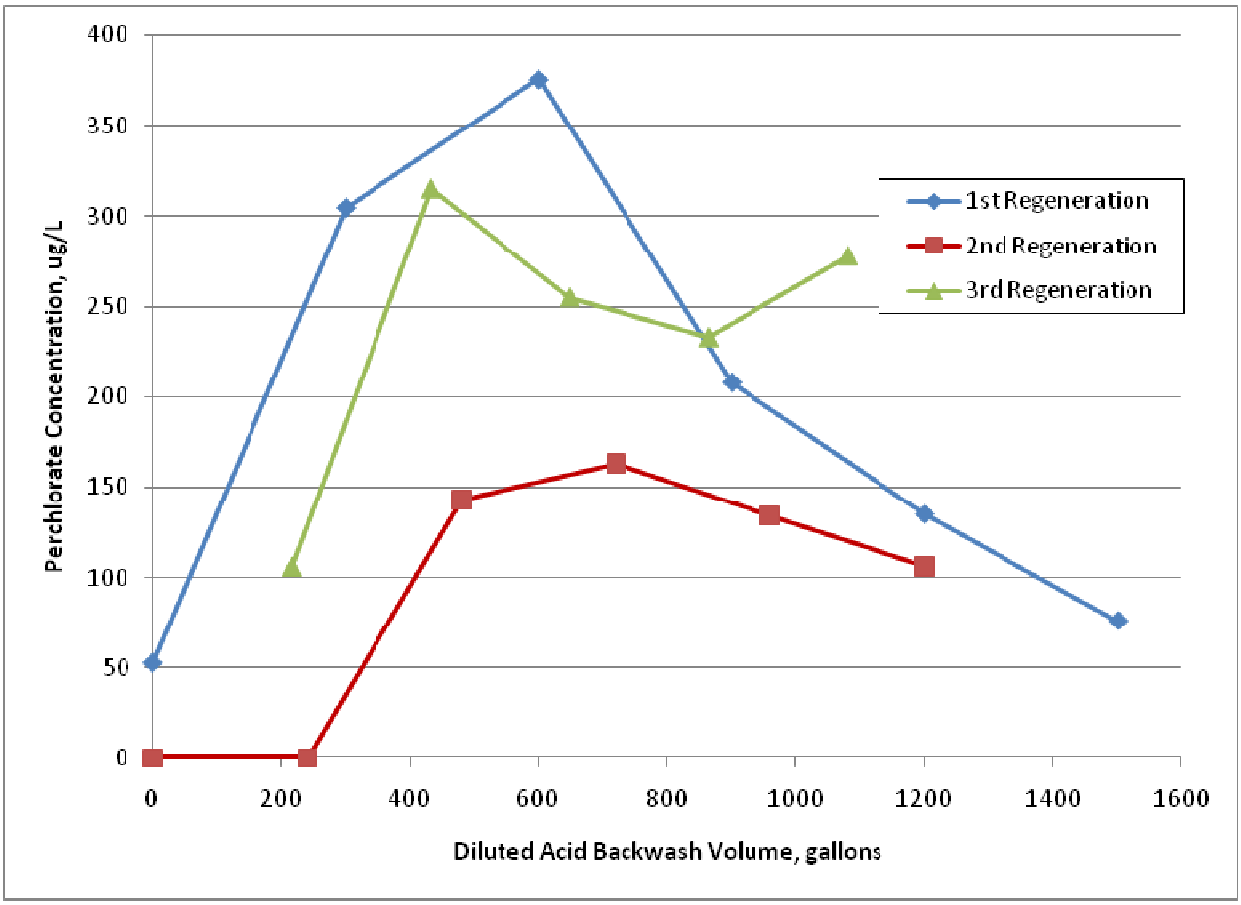

Figure 5-14. Perchlorate Elution from Dilute Acid Backwash during Regeneration

In the first two regeneration cycles, the resin was drained and rinsed with DI water after the dilute acid backwash and prior to tranferring the resin to the regeneration vessel. Samples from the first regeneration indicate the perchlorate in this DI rinse dropped rapidly from 22.1 µg/L to ≤5 µg/L after 150 gallons of rinse and remained at this level for the duration of the DI rinse. The DI water supply contained < 2.5 µg/L perchlorate during the first regeneration. During the

second regeneration, one sample was obtained during the DI rinse containing 16.8 µg/L perchlorate; the DI water supply contained < 2.5 µg/L perchlorate as well. This DI rinse was eliminated for the third regeneration round; the resin was transferred prior to the dilute acid backwash eliminating the need for a rinse.

5.7.2.1.2 Perchlorate Elution during Tetrachloroferrate Regeneration

The resin was regenerated by backwashing with tetrachloroferrate solution. Perchlorate samples were taken from the effluent during regeneration, shown in Figure 5-15, and as composites from the receiving containers, both drums and tanks, after regeneration was completed, shown in Figure 5-16. In all three regeneration cycles, there is a lag in perchlorate elution followed by a sharp increase in perchlorate concentration. The rengerant volume at which this peak occurs is reasonably, but not absolutely consistent, Peak concentrations are up to four orders of magnitude higher than those observed in backwash. Perchlorate concentration then rapidly returns to very low levels with continued tetrachloroferrate addition. This sharp elution curve is desireable in that it allows the amount of regenerant containing the perchlorate.

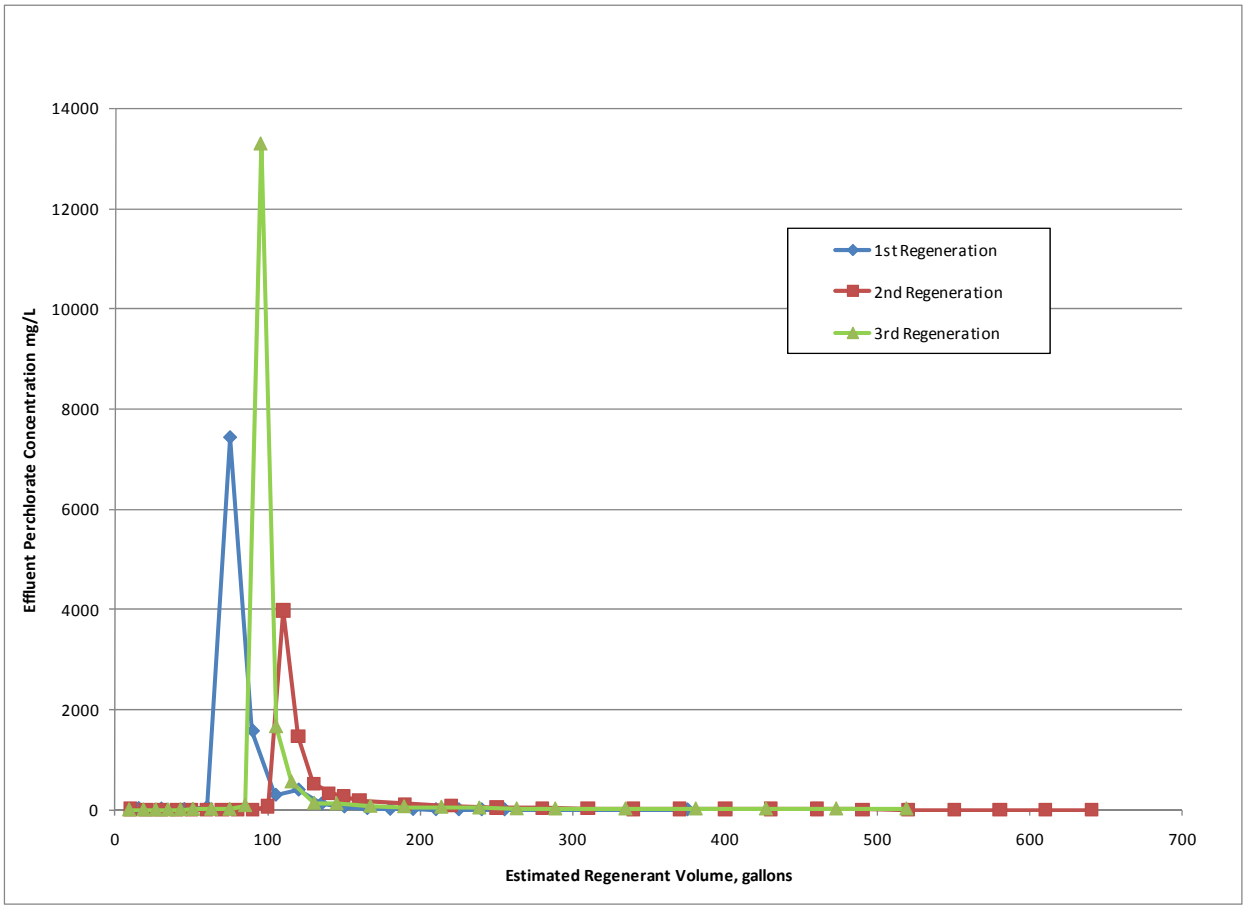

Figure 5-15. Perchlorate Elution during Tetrachloroferrate Regeneration

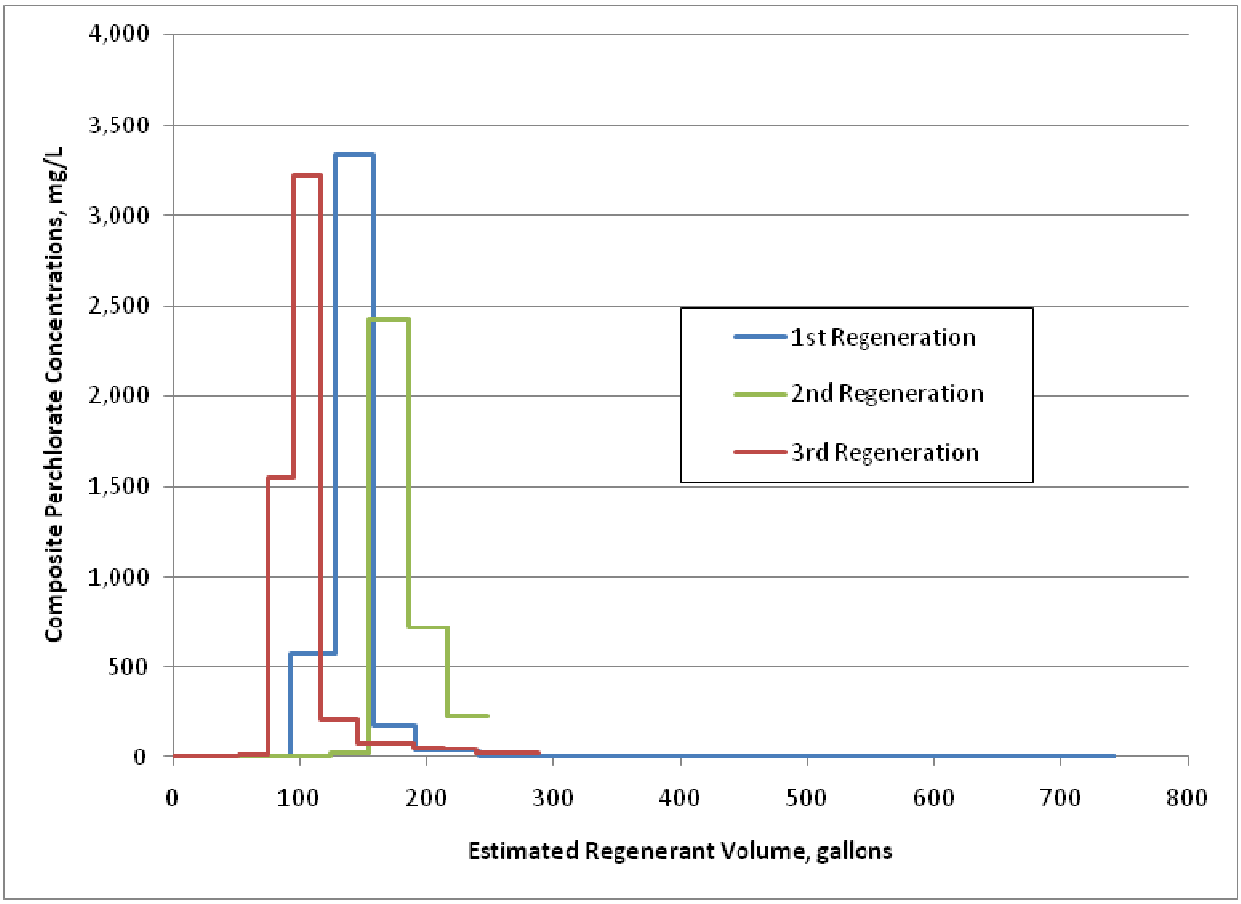

Figure 5-16. Composite Perchlorate during Tetrachloroferrate Regeneration

5.7.2.1.3 Perchlorate Elution in Post Regeneration Rinses

After tetrachloroferrate regeneration, the resin was rinsed with dilute acid. Samples were taken during the dilute acid rinse after each 150 gallons and as composites from the dilute acid rinse receiving drums during the first and second regeneration cycles. No perchlorate was detected in the grab samples taken during dilute acid rinse; the reporting limits were quite high for these analysis at 250 µg/L and greater. The first acid rinse composite sample from the first regeneration contained 2.2 µg/L perchlorate; remaining samples contained < 1.25 µg/L perchlorate. The first three composite samples from the second regeneration averaged 5.2 µg/L perchlorate falling to 3.7 µg/L in the fourth sample and to < 1.25 µg/L in the remaining samples.

The dilute acid rinse was followed by a second DI water rinse. Samples were collected during this DI rinse after each 150 gallons for a total of 900 gallons DI rinse. During the first regeneration, perchlorate remained < 25 µg/L for all 6 DI rinse samples. During the second regeneration, a secondary peak in perchlorate concentration was observed during the DI rinse as shown in Figure 5-17. During the third regeneration, all 6 DI rinse samples contained < 1.25 µg/L perchlorate.

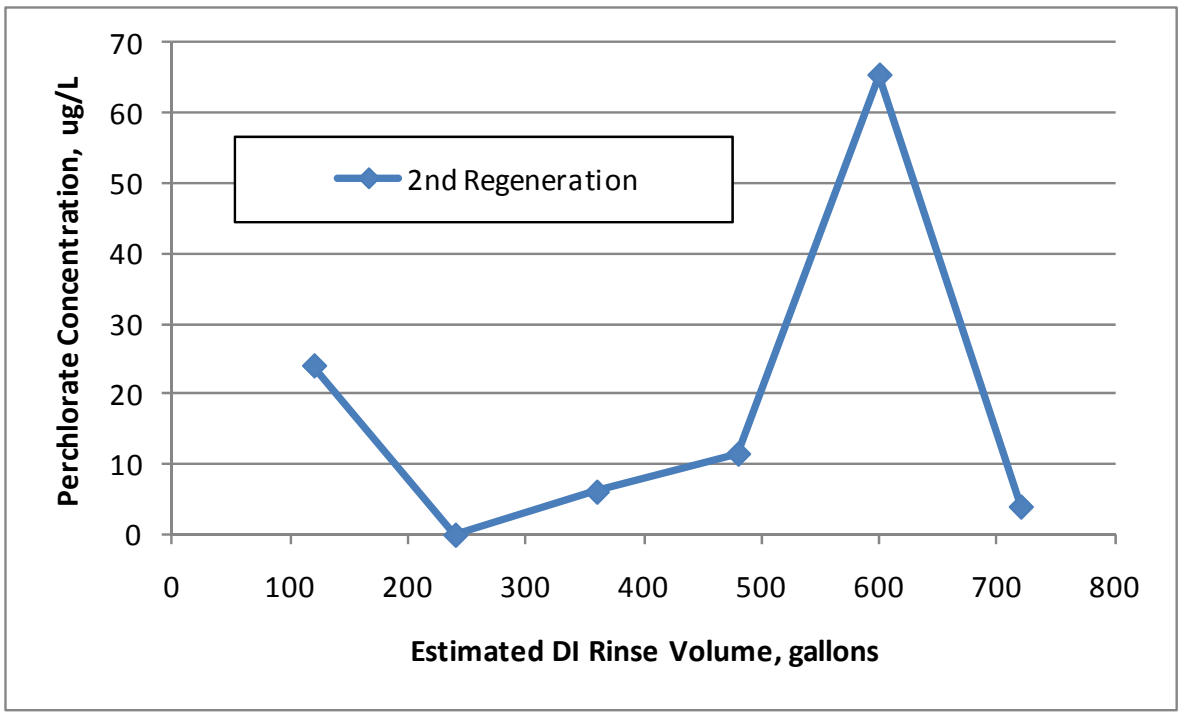

Figure 5-17: Perchlorate Elution during Regeneration Second DI Rinse

After the second DI rinse, the resin was rinsed with ~600 gallons of a nontoxic inorganic solution. Samples were collected at 150 gallon intervals during the first and second regeneration inorganic rinse. Perchlorate concentration in the inorganic rinse effluent from the first regeneration was < 2.5 µg/L in all samples. A secondary peak in perchlorate concentration was observed in the inorganic rinse effluent from the second regeneration as shown in Figure 5.18.

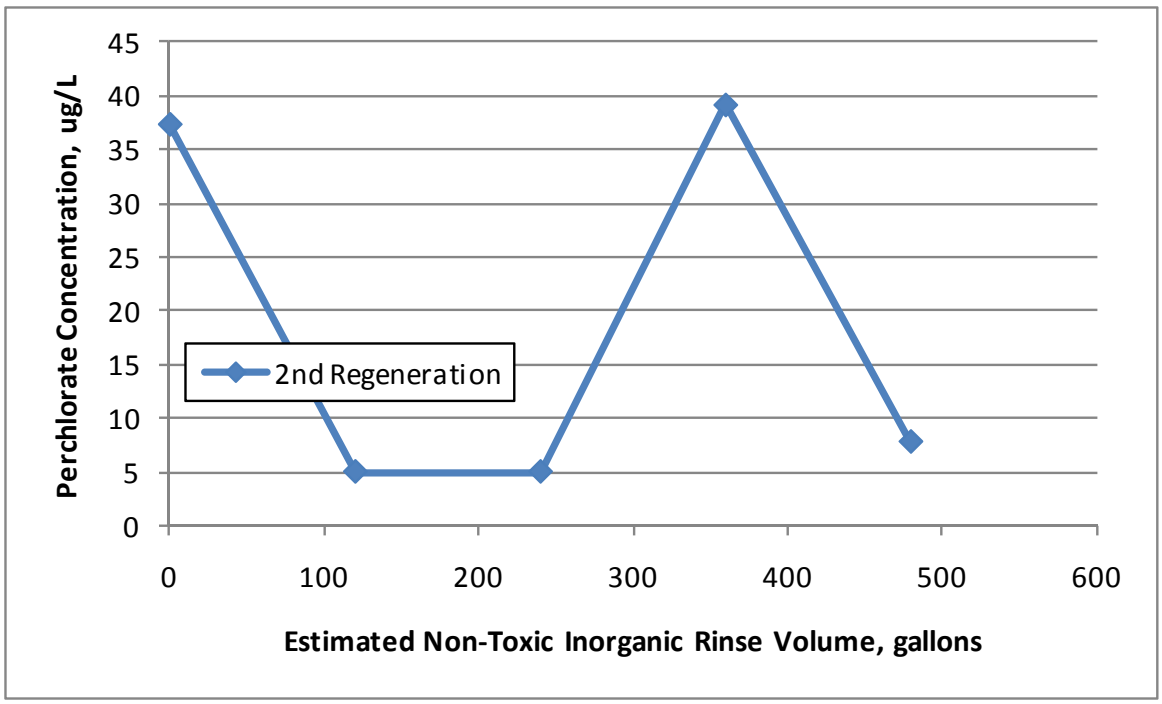

Figure 5-18: Perchlorate Elution during Regeneration Inorganic Rinse

After the inorganic rinse, the resin was rinsed with a final 900 gallons of DI water. Perchlorate samples were collected every 150 gallons for the first and second regeneration rounds. Perchlorate concentration in the 6 final DI water rinse samples of both the first and second regenerations remained < 2.5 µg/L.

5.7.2.2 Nitrate - Regeneration Process

5.7.2.2.1 Nitrate Elution during Resin Backwash and Rinse

The DI backwash effluent was sampled every 10 minutes for 1 hour and analyzed for perchlorate, chloride, nitrate, and sulfate. Nitrate concentration in the DI backwash effluent averaged 2.4, 3.0, and 37 mg/L nitrate for the first, second, and third regeneration rounds respectively. The elevated value in the third value was reviewed and appears to be the actual result – the blank did not suggest any problem.

Dilute acid was used in a subsequent backwash step, before transferring resin to the regeneration vessel in the first and second cycle and after transferring resin in the third regeneration cycle. Nitrate elution during the dilute acid backwashes is shown in Figure 5-19, based on grab samples during each regeneration cycle. For each regeneration event, moderate levels of nitrate eluted from the resin bed during the dilute acid backwash. These levels are roughly 3 orders of magnitude higher than the concentrations of perchlorate eluting during the backwash but 2 orders of magnitude lower than the peak concentration of nitrate that elutes during regeneration (discussed below). Nitrate elution from the first regeneration appears to be confounded with a dilution of the dilute acid feed as discussed in Section 5.7.2.4

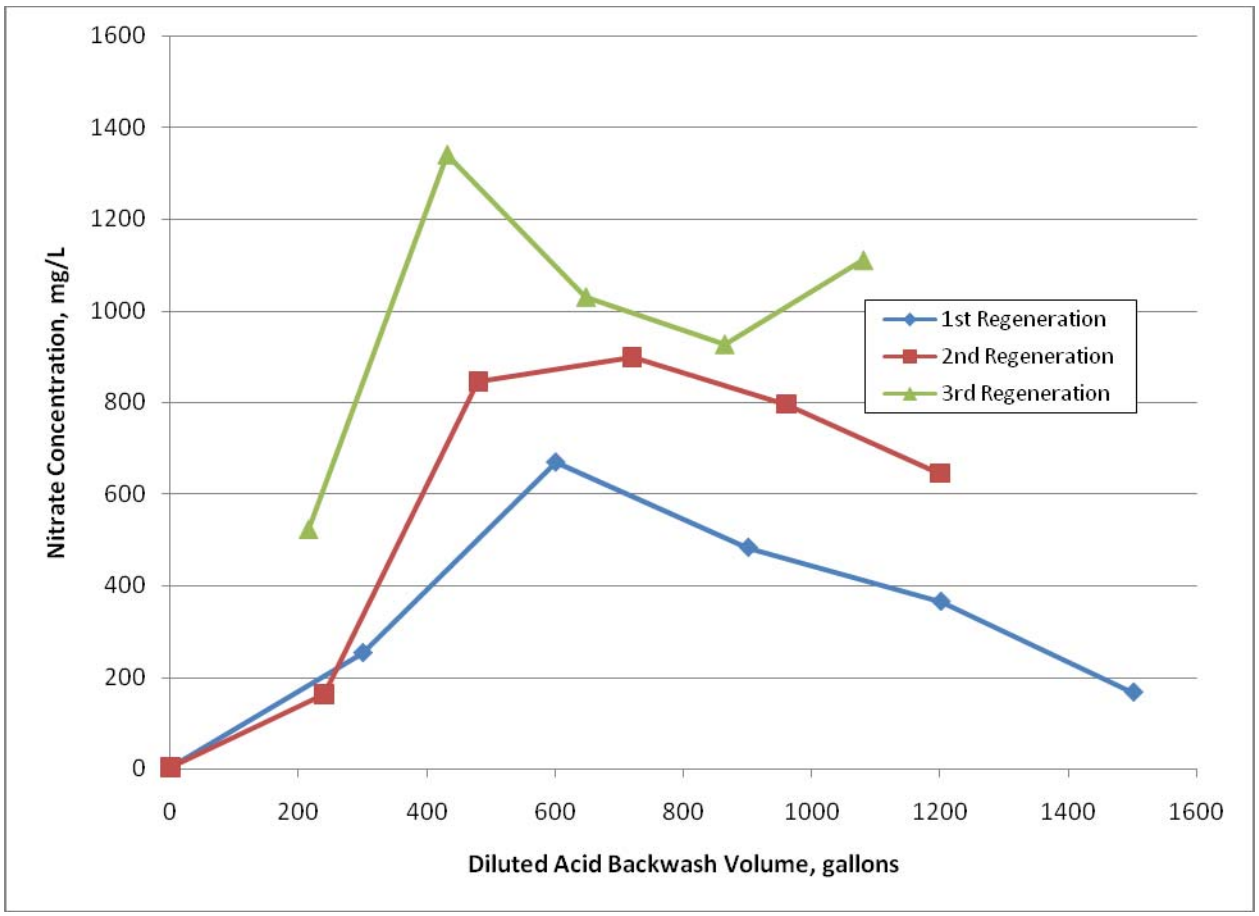

Figure 5-19. Nitrate Elution from Dilute Acid Backwash during Regeneration

In the first two regeneration cycles,, the resin was drained and rinsed with DI water after the dilute acid backwash and prior to tranferring the resin to the regeneration vessel. Samples from the first regeneration indicate the nitrate in this DI rinse dropped rapidly from 1.8 to ≤1 mg/L after 150 gallons of rinse and remained at this level for the duration of the DI rinse. The DI water supply contained 4.3 mg/L nitrate during the first regeneration. During the second regeneration, one sample was obtained during the DI rinse containing 6.6 mg/L nitrate; the DI water supply contained < 0.3 mg/L nitrate. This DI rinse was eliminated for the third regeneration round; the resin was transferred prior to the dilute acid backwash eliminating the need for a rinse.

5.7.2.2.2 Nitrate elution during resin Regeneration

The resin was then regenerated by backwashing with tetrachloroferrate solution. Nitrate samples were taken from the effluent during regeneration, shown in Figure 5-20, and as composites from the receiving containers, both drums and tanks, after regeneration was completed, shown in Figure 5-21. In all three regeneration cycles, there is a lag in nitrate elution followed by a sharp increase in nitrate concentration. Nitrate concentration then rapidly returns to very low levels with continued tetrachloroferrate addition. As with perchlorate the nitrate peak is sharp and relatively consistent in elution volume. The nitrate peak partially overlaps with the perchlorate peak.

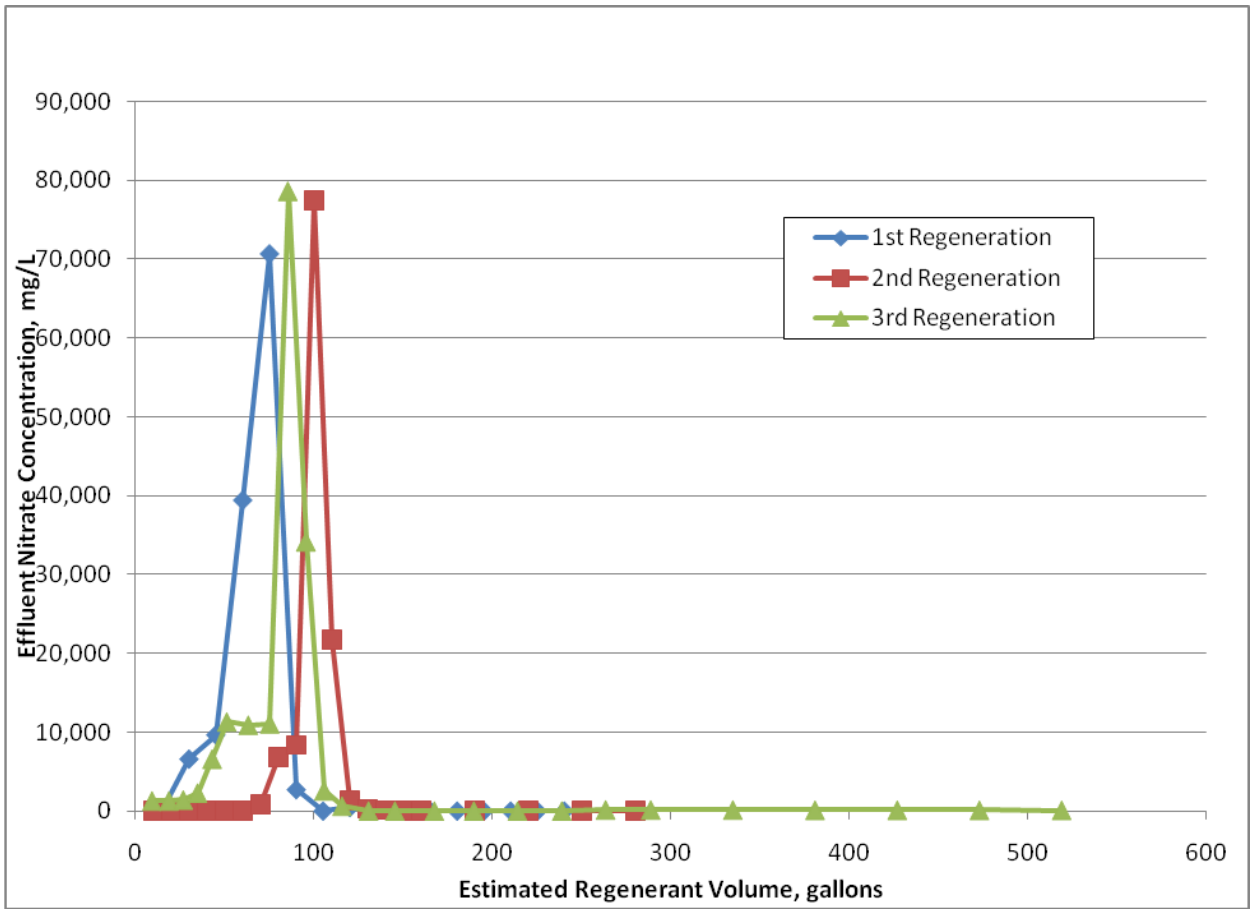

Figure 5-20. Nitrate Elution during Tetrachloroferrate Regeneration

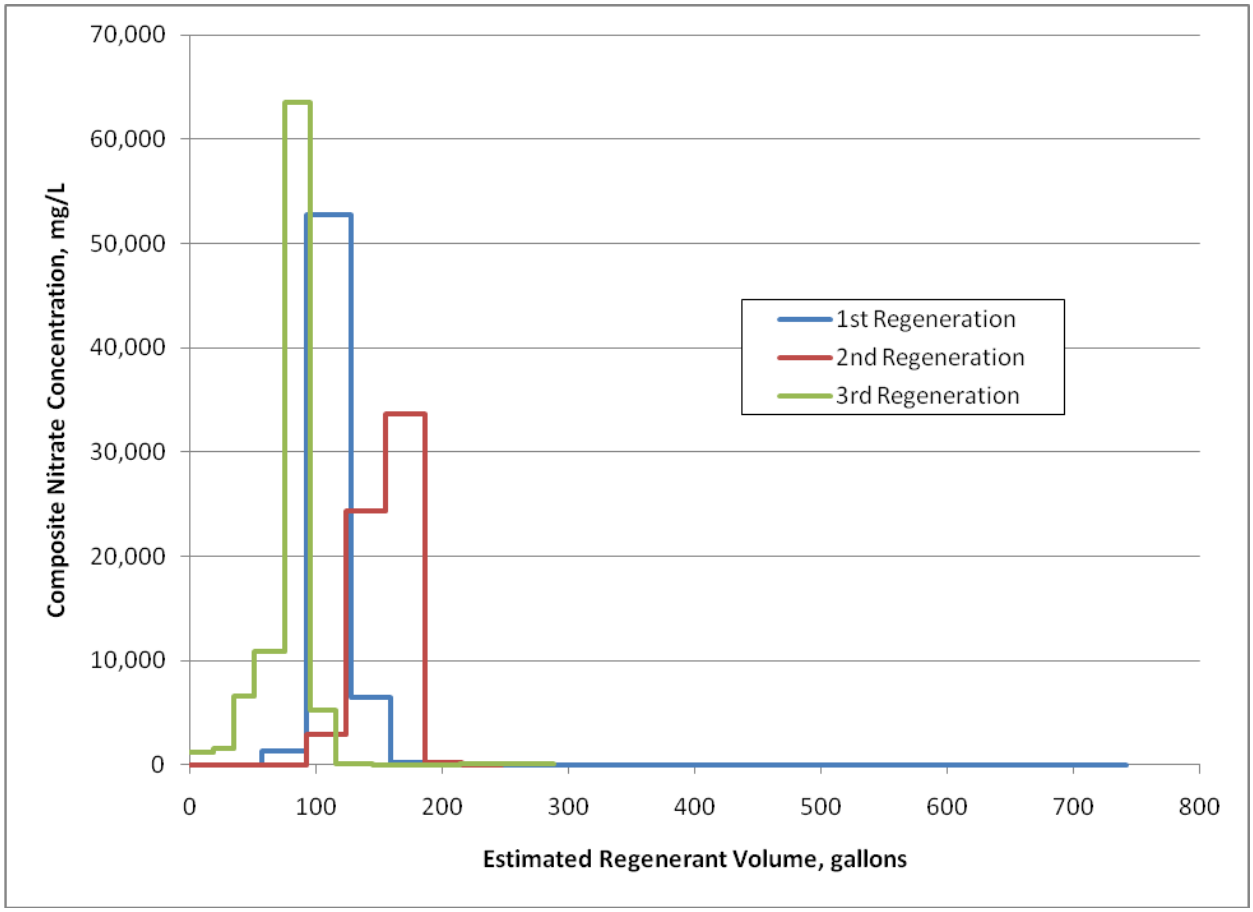

Figure 5-21. Composite Nitrate Elution during Tetrachloroferrate Regeneration

5.7.2.2.3 Nitrate Elution in Post Regeneration Rinses

After tetrachloroferrate regeneration, the resin was rinsed with dilute acid. Nitrate samples were taken during the dilute acid rinse after each 150 gallons during the first and second regeneration cycles. No nitrate was detected in the samples taken during the first regeneration cycle dilute acid rinse; the reporting limits were 50 mg/L. During the second regeneration cycle, the first dilute acid rinse sample contained 110 mg/L nitrate; the remaining three samples contained < 10 mg/L nitrate.

No nitrate samples were analyzed from the second DI rinse, after the acid rinse, or from the inorganic solution rinse, after the second DI rinse. After the inorganic solution rinse, the resin was rinsed with a final 900 gallons of DI water. Nitrate samples were collected every 150 gallons for the second and third regeneration rounds. Nitrate concentration was < 0.1 mg/L in the 6 final DI water rinse samples of the second regeneration cycle. Of the 4 nitrate samples analyzed from the third regeneration cycle, all contained < 1.0 mg/L nitrate.

5.7.2.3 Sulfate – Regeneration Process

5.7.2.3.1 Sulfate Elution during Backwash and Rinse

The DI backwash effluent was sampled every 10 minutes for 1 hour and analyzed for perchlorate, chloride, nitrate, and sulfate. Sulfate concentration in the DI backwash effluent averaged 0.1, 0.2, and 13.4 mg/L for the first, second, and third regeneration rounds respectively. However, a sulfate water blank submitted on June 6, 2008 was 11 mg/L so no significance should be attributed to the 13.4 mg/L backwash value.

Dilute acid was used in a subsequent backwash step. Sulfate elution during the dilute acid backwashes, shown in Figure 5-22, is based on grab samples during each regeneration cycle. For each regeneration event, small levels of sulfate eluted from the resin bed during the dilute acid backwash. Sulfate elution from the first regeneration may be confounded with a dilution of the dilute acid feed as discussed in Section 5.7.2.4.

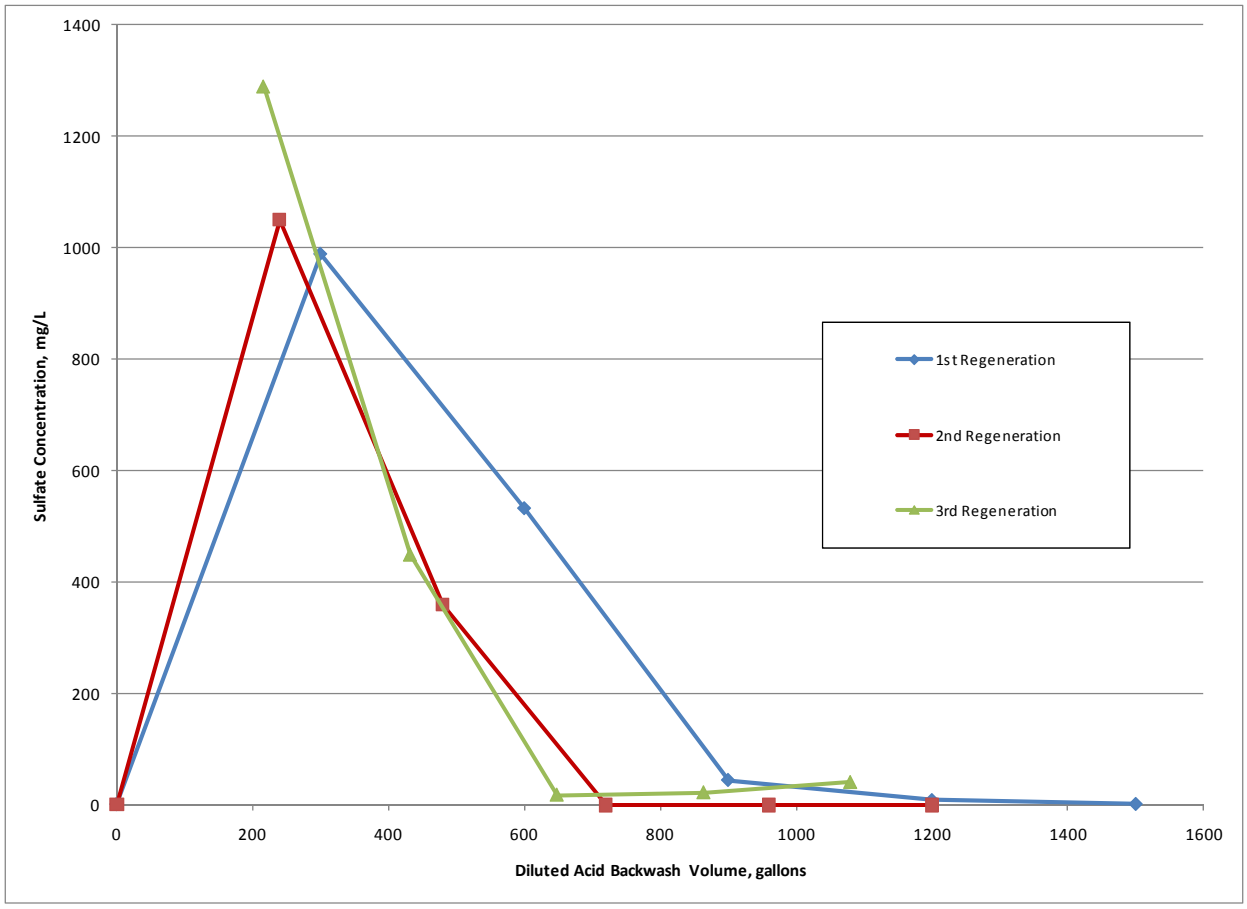

Figure 5-22. Sulfate Elution from DiluteAcid Backwash during Regeneration

After the dilute acid backwash, the resin was drained and rinsed with DI water prior to tranferring the resin to the regeneration vessel. Sulfate samples were collected every 150 gallons

during the first regeneration cycle; sulfate remained < 1.0 mg/L for all samples. One sample was taken during the dilute acid rinse of the second regeneration cycle containing < 1.0 mg/L sulfate. No sample of this rinse was analyzed during the third regeneration.

5.7.2.3.2 Sulfate Elution during Regeneration

The resin was regenerated by backwashing with tetrachloroferrate solution. Sulfate samples were taken from the effluent during regeneration, shown in Figure 5-23, and as composites from the receiving containers, both drums and tanks, after regeneration was completed, shown in Figure 5-24. In all three regeneration cycles, there is a lag in sulfate elution followed by a sharp increase in sulfate concentration. Sulfate concentration then rapidly returns to a baseline level with continued tetrachloroferrate addition.

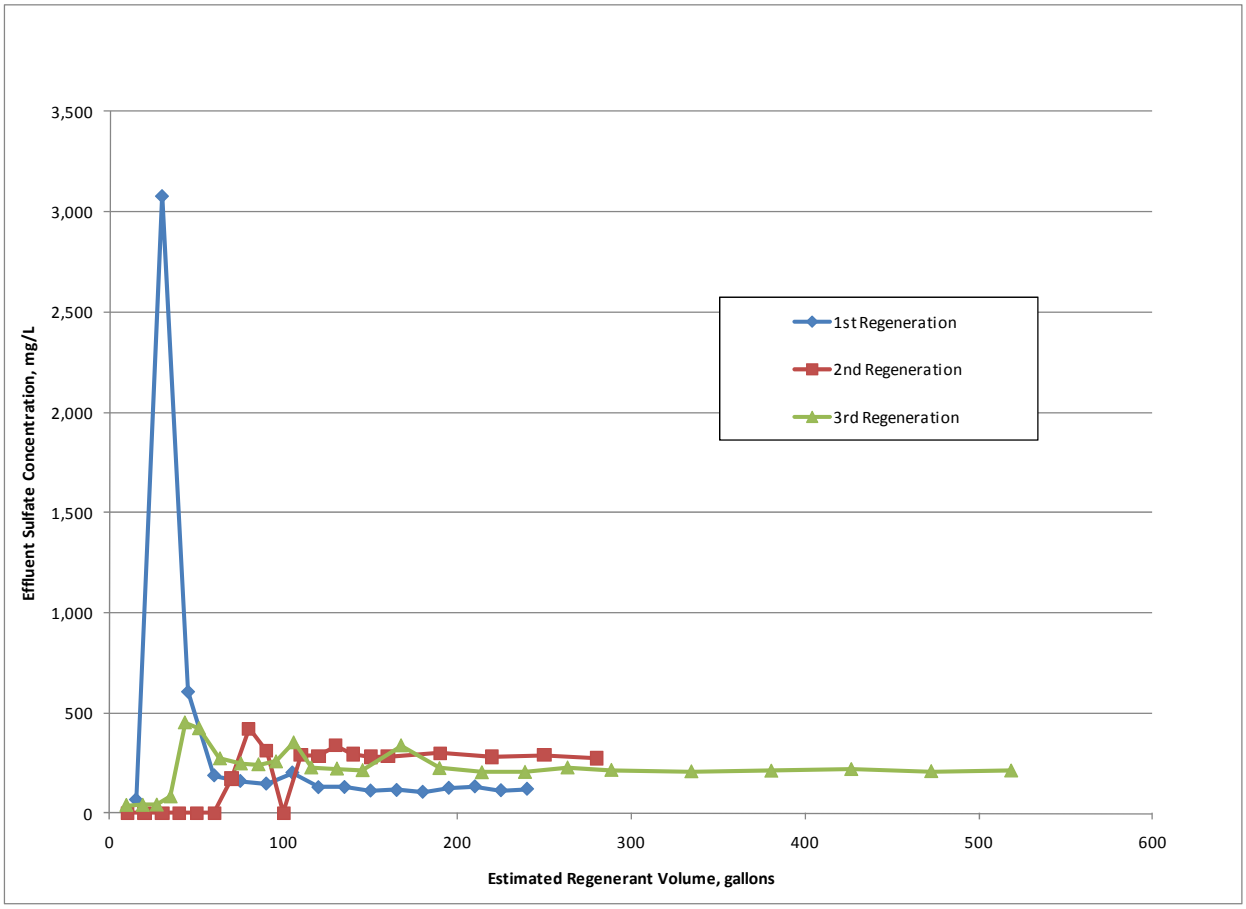

Figure 5-23. Sulfate Elution during Tetrachloroferrate Regeneration

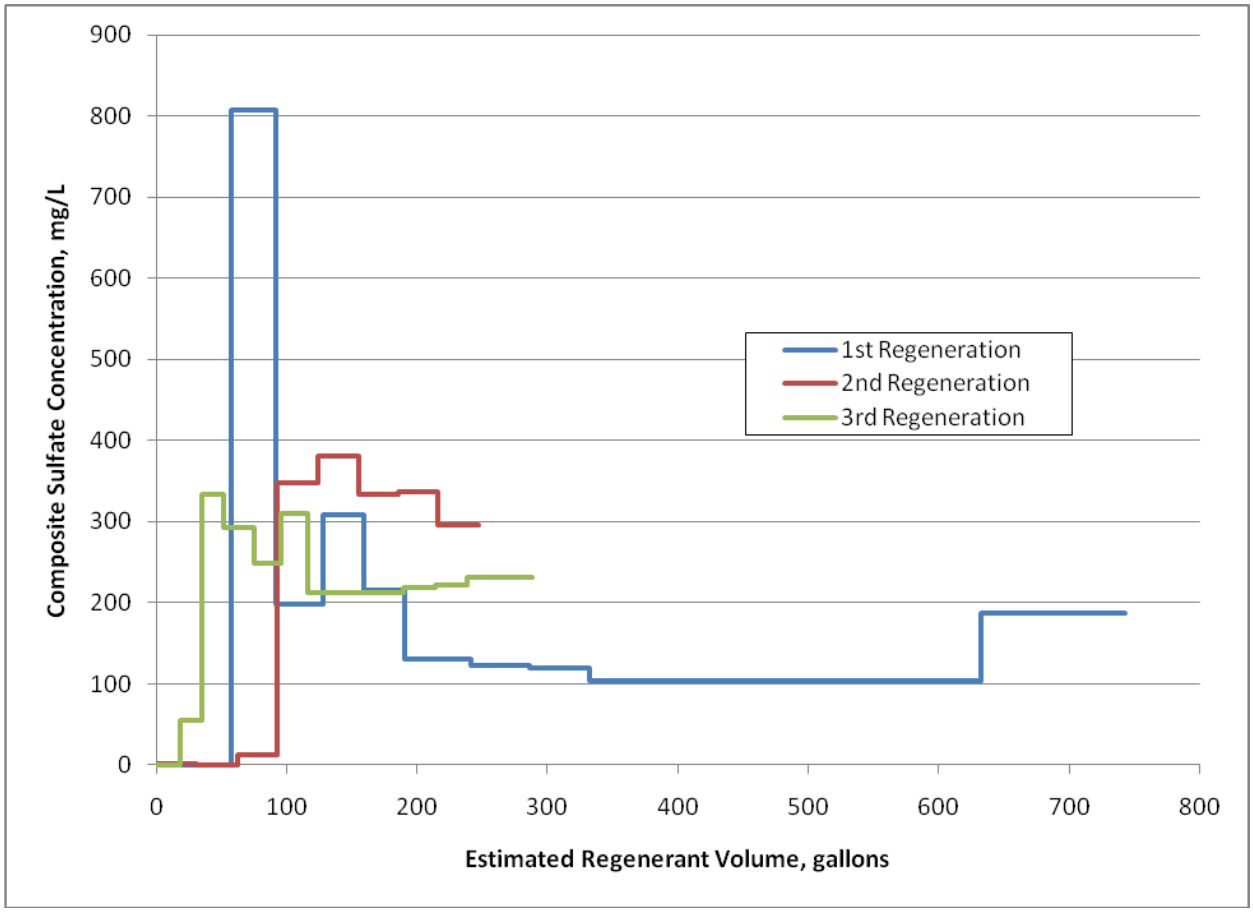

Figure 5-24. Composite Sulfate Elution during Tetrachloroferrate Regeneration

5.7.2.3.3 Sulfate Elution during Post Regeneration Rinses

After tetrachloroferrate regeneration, the resin was rinsed with dilute acid. Sulfate samples were taken during the dilute acid rinse after each 150 gallons during the first and second regeneration cycles. Sulfate concentration was 64 mg/L in the first dilute acid rinse sample from the first regeneration cycle and < 50 mg/L for the remaining first cycle samples. During the second regeneration cycle, the first dilute acid rinse sample contained 99 mg/L sulfate; the remaining three samples contained < 20 mg/L sulfate.

No sulfate samples were analyzed from the second DI rinse, after the acid rinse, or from the inorganic solution rinse, after the second DI rinse. After the inorganic solution rinse, the resin was rinsed with a final 900 gallons of DI water. Sulfate samples were collected every 150 gallons for the second and third regeneration rounds. Sulfate concentration was < 0.1 mg/L in the 6 final DI water rinse samples of the second regeneration cycle. Of the four samples analyzed from the third regeneration cycle, sulfate concentration averaged 95 mg/L with no clear trend.

5.7.2.4 Chloride – Regeneration Process

The DI backwash effluent was sampled every 10 minutes for 1 hour and analyzed for perchlorate, chloride, nitrate, and sulfate. Chloride concentration in the DI backwash effluent averaged 1.2, 1.0, and 11.8 mg/L for the first, second, and third regeneration rounds respectively.

Dilute acid was used in a subsequent backwash event before transferring resin to the regeneration vessel in the first and second cycle and after transferring resin in the third regeneration cycle. Chloride elution during the dilute acid backwashes is shown in Figure 5-25 based on grab samples during each regeneration cycle. For each regeneration event, Chloride concentration rises rapidly after an initial lag. Since the acid used is nominally 0.1 N HCl, chloride concentration is expected to rise to nominally 3,500 mg/L in each backwash event. Chloride concentration from the first regeneration cycle peaks at nominally 1,500 mg/L and declines thereafter; this is believed to be due to inadvertent dilution of the 0.1 N HCl caused by a failure of the concentrated HCl feed pump during the dilute acid backwash event. Chloride concentration in both the second and third regeneration cycle rise to approach 3,500 mg/L as expected.

No additional chloride samples were analyzed for the DI rinse, the tetrachloroferrate regeneration, the acid rinse, the second DI rinse, or from the inorganic solution rinse. After the inorganic solution rinse, the resin was rinsed with a final 900 gallons of DI water. Chloride samples were collected every 150 gallons for the second and third regeneration rounds. Chloride concentration in the final DI rinse of the first regeneration cycle dropped from 4.6 mg/L in the first sample to 1.3 mg/L in the final sample. Of the 4 chloride samples analyzed from the third regeneration cycle, chloride concentration averaged 56 mg/L with no clear trend.

5.7.2.5 Uranium – Regeneration Process

The dilute acid backwash step of the regeneration is designed to remove uranium. Uranium was monitored frequently during the dilute acid backwash during the first regeneration cycle; the uranium elution profile is shown in Figure 5-26. Uranium concentration increased sharply after the first 300 gallons of dilute acid backwash and then declined through the remainder of the dilute acid backwash. Uranium elution from the dilute acid backwash of the first regeneration cycle is likely confounded with dilution of the dilute acid feed as discussed in Section 5.7.2.4. During the third regeneration cycle, the dilute acid backwash was sampled from the receiving containers generating composite samples for every 2 BV. The composite uranium elution for the third regeneration cycle is shown in Figure 5-26a.The vast majority of the uranium was eluted in the first 4 BV, 432 gallons, of dilute acid backwash.

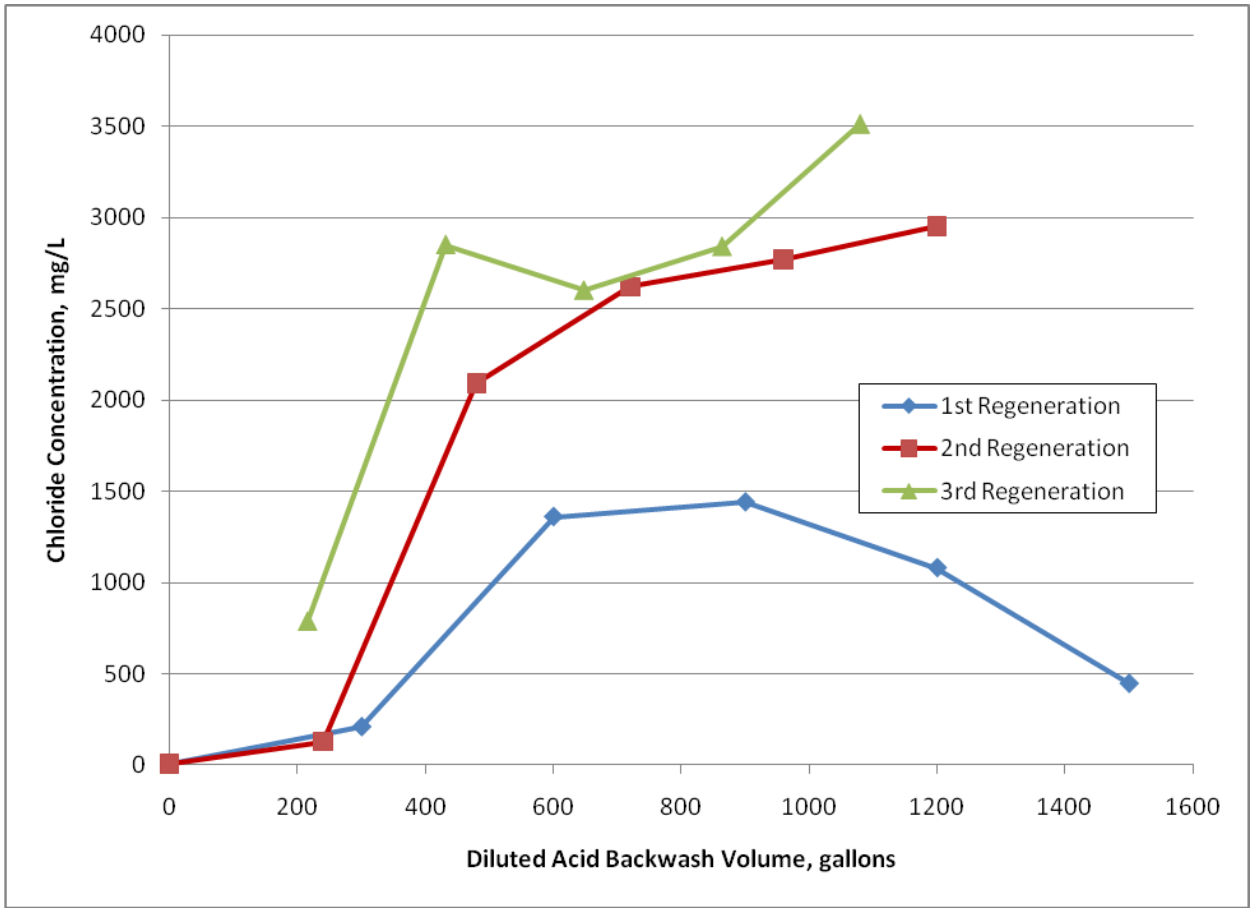

Figure 5-25. Chloride Elution from Dilute Acid Backwash during Regeneration

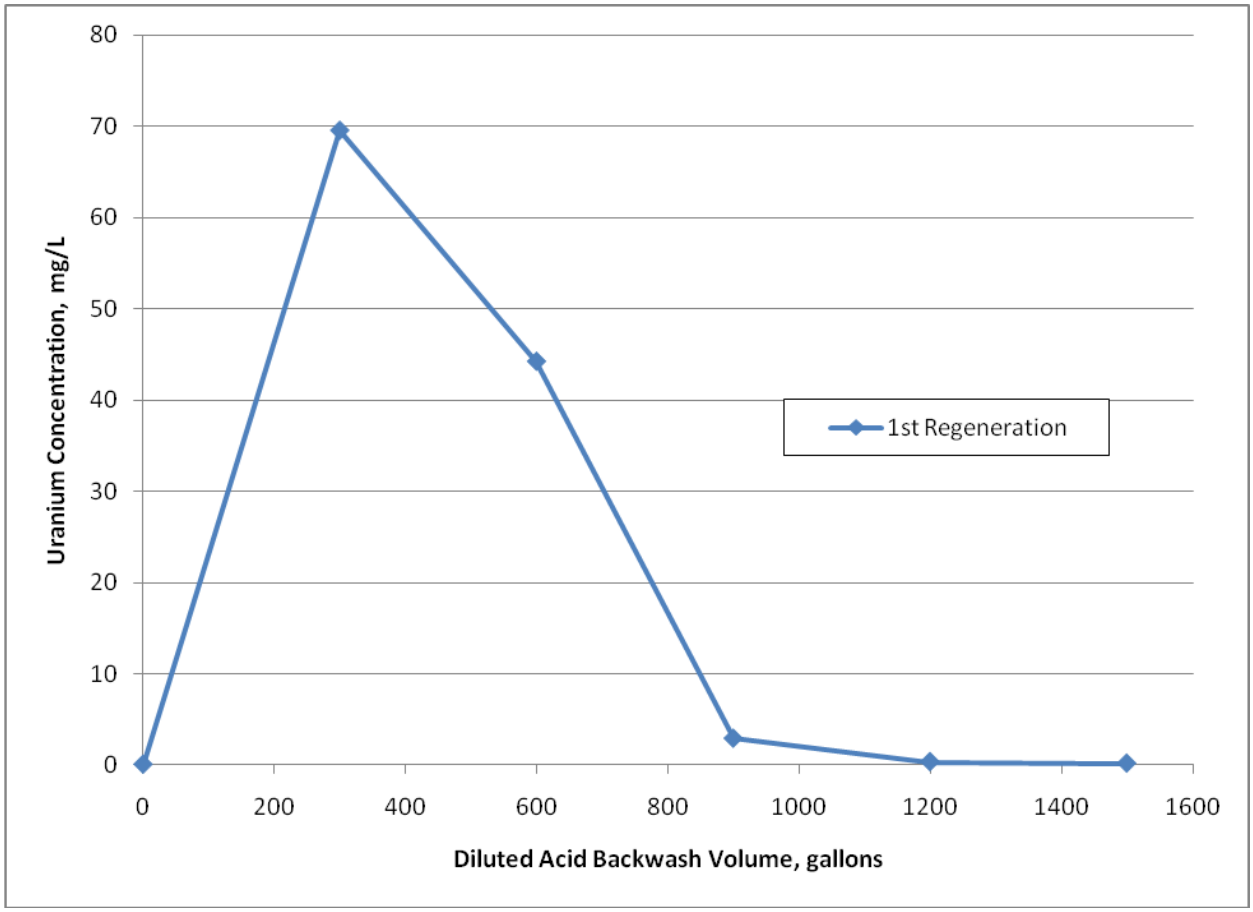

Figure 5-26. Uranium Elution from Dilute Acid Backwash during First Regeneration Cycle

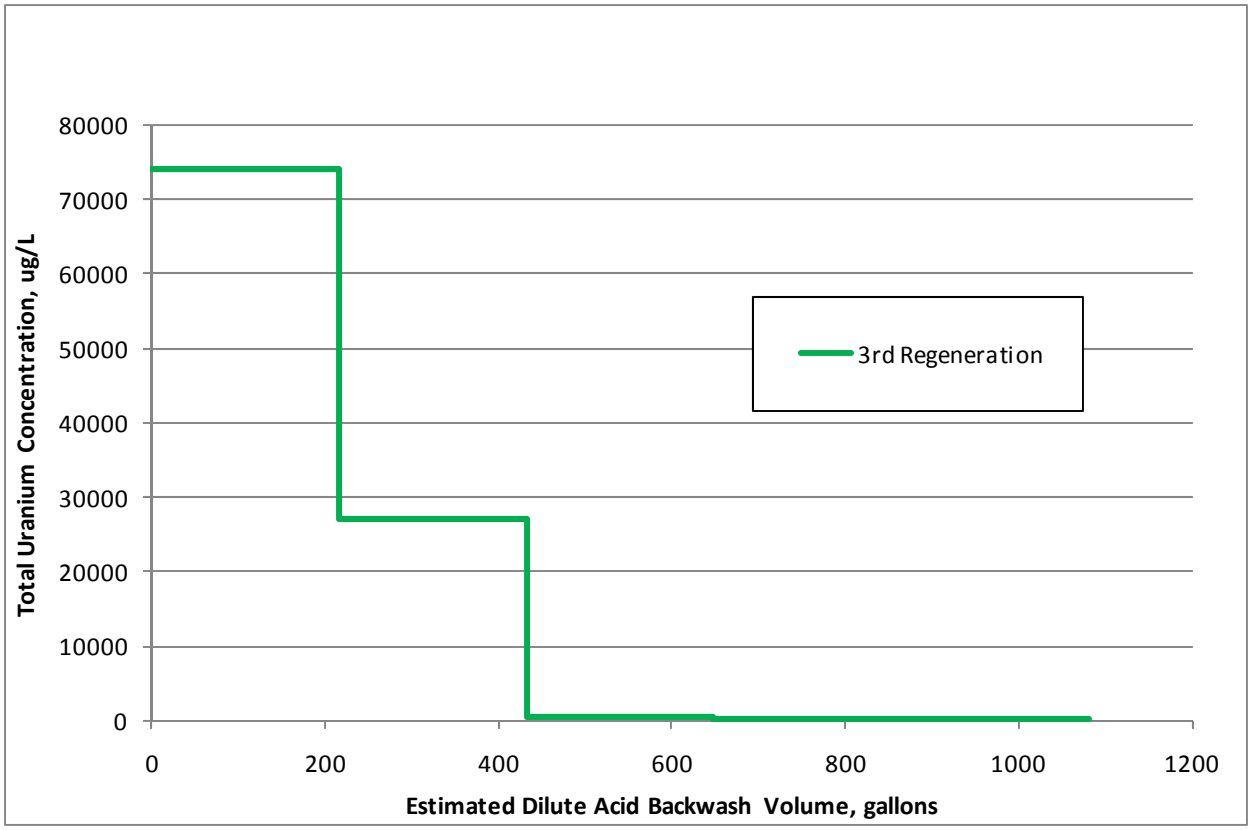

Figure 5-26a: Composite Uranium Elution from Dilute Acid Backwash during Third Regeneration Cycle

Uranium concentration in the tetrachloroferrate regenerant was sampled during each regeneration cycle. Samples were composites taken from the receiving container, tank E, of the final 2 BV tetrachloroferrate regenerant for each cycle. The uranium remaining after the dilute acid backwash is expected to elute at the beginning of the tetrachloroferrate regeneration cycle. This sample is believed to approximate the uranium concentration in the feedstock and therefore reflect any buildup through multiple cycles. Uranium concentration in the first regeneration cycle was 32 µg/L. The uranium concentration in the second regeneration cycle was below the reporting limit of 100 µg/L. The uranium concentration in the third regeneration cycle was 180 µg/L. These results indicate a small buildup of uranium in the regenerant.

5.7.2.6 Total Iron – Regeneration Process

5.7.2.6.1 Total Iron – Tetrachloroferrate Regeneration

Total iron was monitored during the tetrachloroferrate regeneration (backwash) by taking composite samples from the receiving containers, whether drums or tanks. Elution of total iron is shown in Figure 5-27. There is a lag in total iron elution as the tetrachloroferrate displaces the dilute acid followed by a sharp increase in total iron concentration to approximately the 56,000 mg/L that would be expected for this one molar ferric chloride solution. Effluent total iron concentration remains stable after the resin becomes saturated.

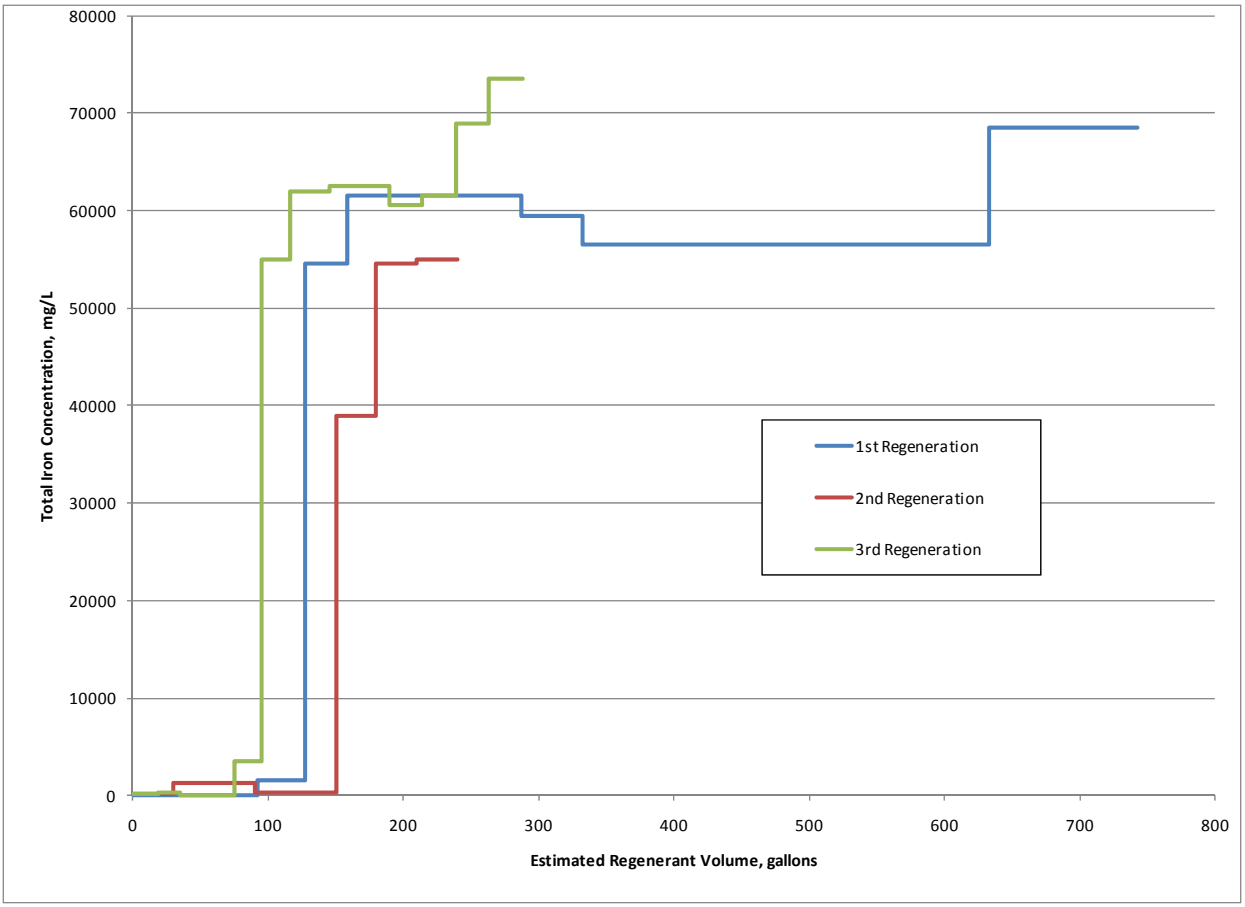

Figure 5-27. Composite Iron Elution during Tetrachloroferrate Regeneration

5.7.2.6.2 Total Iron – Rinse Steps

After tetrachloroferrate regeneration, the resin was rinsed with dilute acid. Effluent total iron was monitored during the first and second regeneration acid rinse with grab samples and after the acid rinse with composite samples taken from the receiving containers. Total iron elution during the acid rinse is shown in Figure 5-28 and from the composite samples in Figure 5-29. Total iron concentration decreased with volume through 600 gallons acid rinse. After 600 gallons of acid rinse, significant iron concentrations are still present in the acidic effluent.

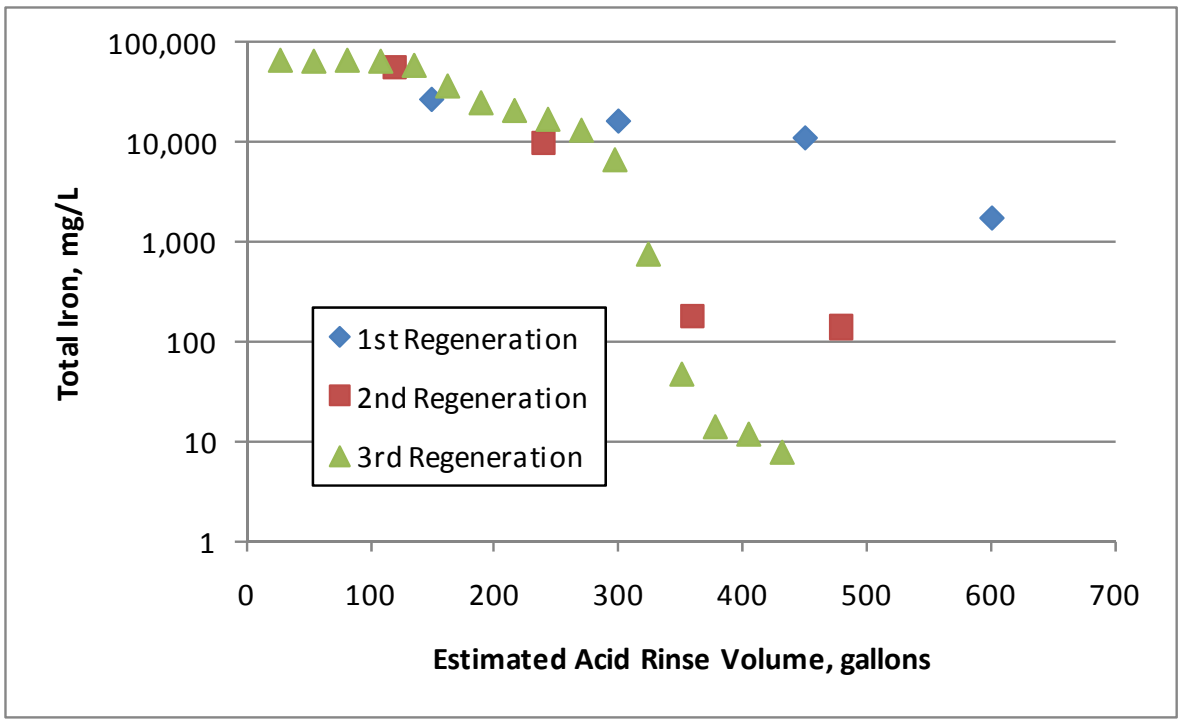

Figure 5-28: Total Iron Elution from Acid Rinse during Regeneration

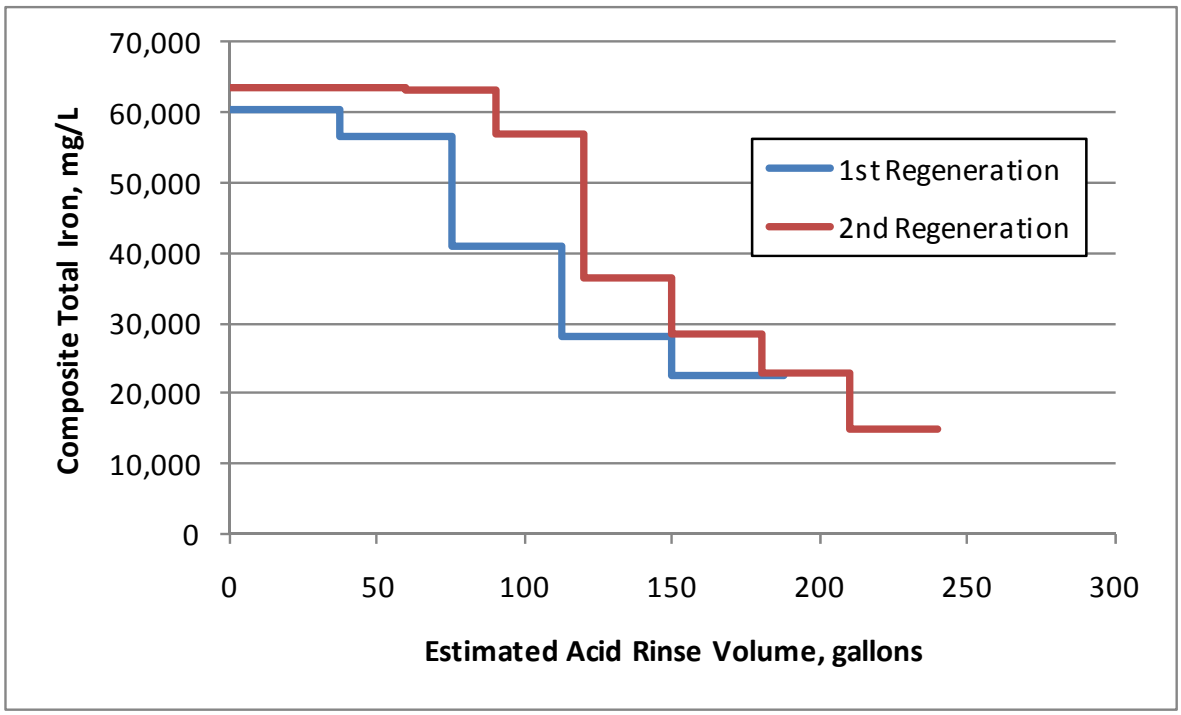

Figure 5-29: Composite Total Iron Elution from Acid Rinse during Regeneration

After rinsing with dilute acid, the resin was rinsed with second DI Water Rinse. Total iron was sampled from the effluent periodically through the second DI rinse. Elution of total iron during the second DI rinse is shown in Figure 5-30. While the total iron concentration generally declined with rinse volume, the decline was not rapid. In addition, an increase in total iron concentration was observed in both the second and third regeneration cycles after significant rinse volume. As seen in Figure 5-17, the elution of perchlorate in the second regeneration cycle mirrors the elution of total iron in the second regeneration cycle. We suggest that iron may thus be a useful surrogate for process control.

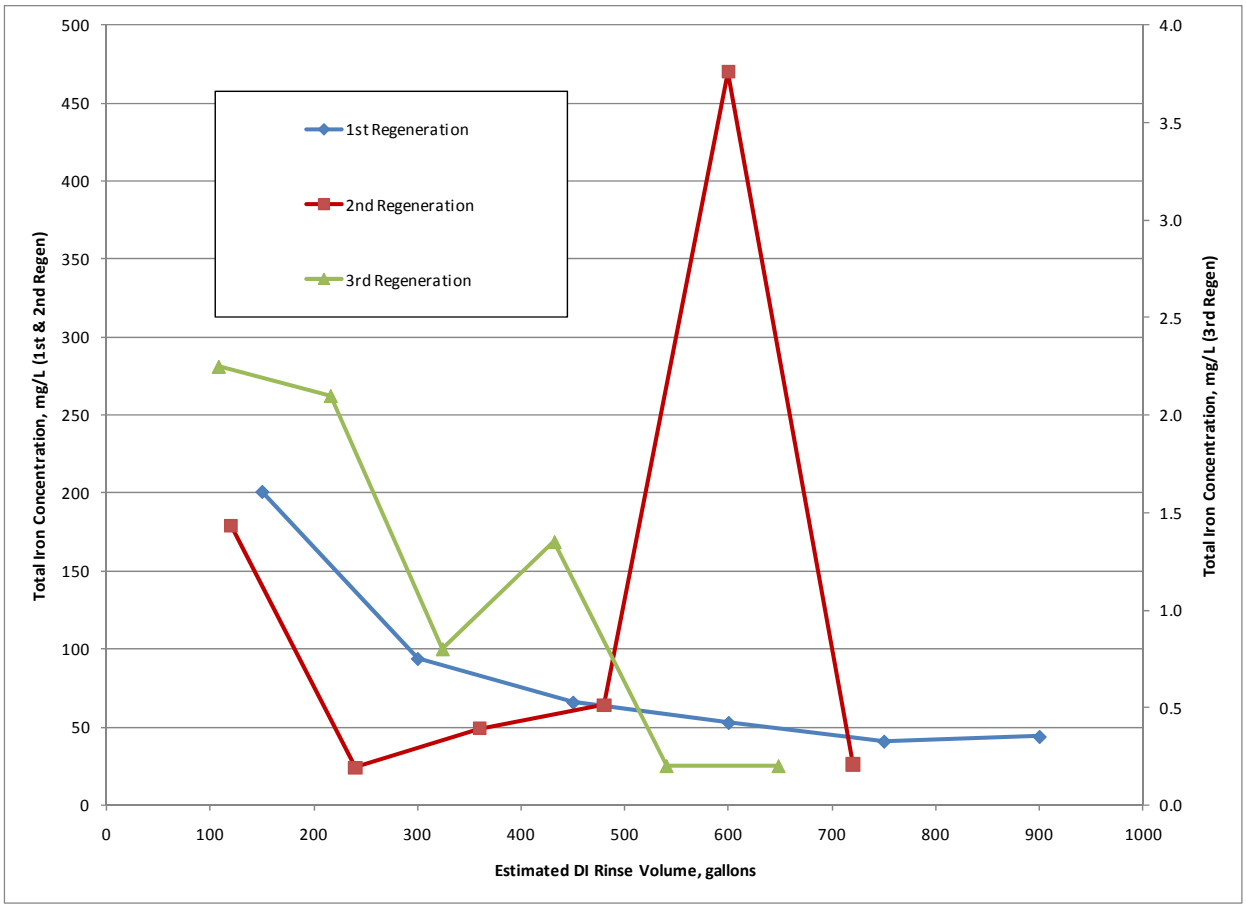

Figure 5-30 Total Iron Elution from Second DI Rinse during Regeneration

After the second DI rinse, the resin was rinsed with an inorganic solution. Total Iron samples were collected periodically during the nontoxic inorganic rinse during all three regeneration cycles. Elution of total iron during the nontoxic inorganic rinse is shown in Figure 5-31. Total iron concentrations were significantly lower in the first and third regeneration round than in the second regeneration round. This was assumed to be due to more complete iron washout in the preceeding steps during the first and third regeneration cycle. In both the first and second regeneration cycle, a rapid drop in effluent total iron concentration during the nontoxic inorganic rinse was followed by a significant spike; concentration of total iron in the third regeneration cycle was much lower and this spike was not observed.

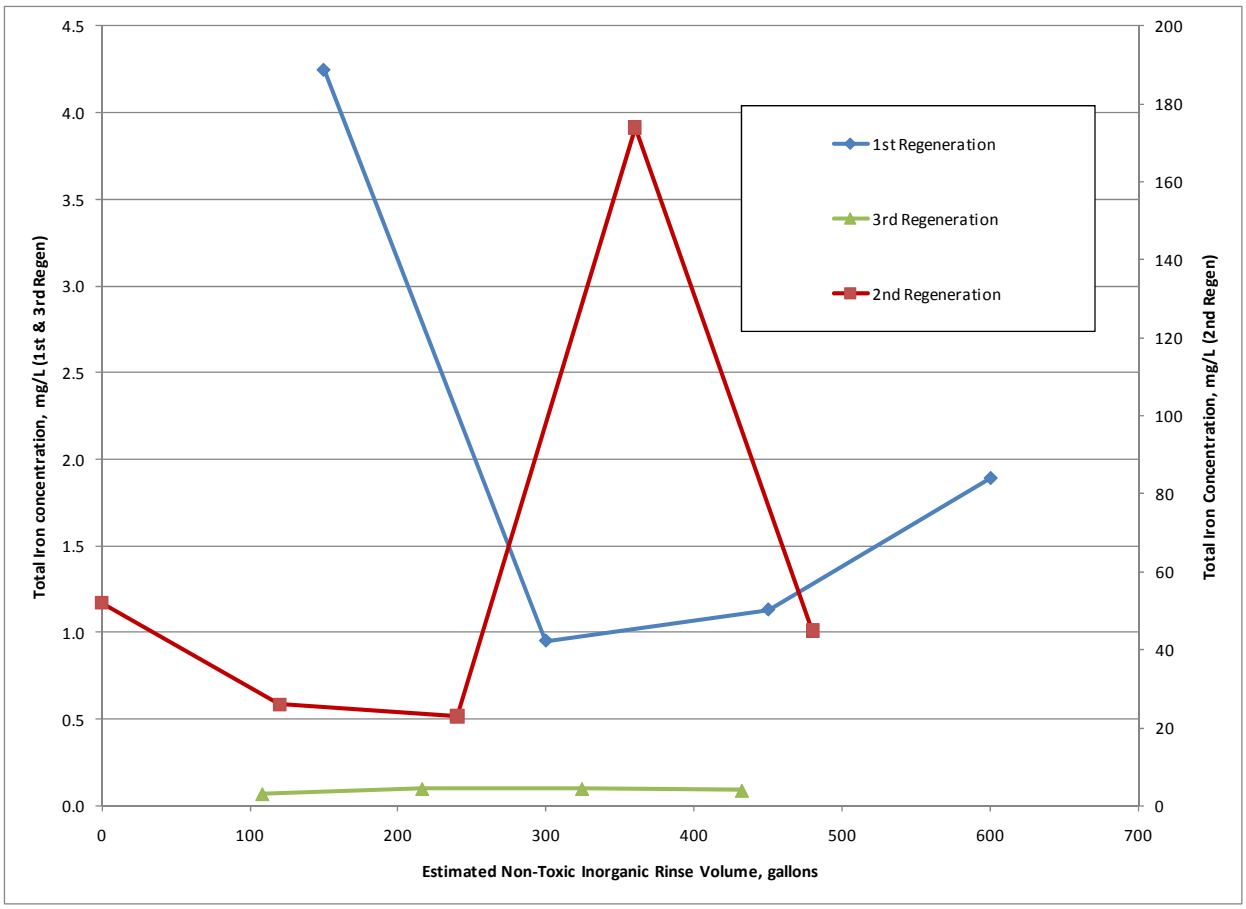

Figure 5-31: Total Iron Elution from Nontoxic inorganic Rinse during Regeneration

After the nontoxic inorganic rinse, the resin was received a final DI rinse before transfer and shipment. Total iron was sampled periodically throughout the final DI rinse. Total iron concentration from the final DI rinse of the first regeneration cycle dropped from a high of 1.8 mg/L to an average of 0.26 mg/L. Total iron from the final DI rinse of the second regeneration cycle ranged from below the reporting limit of 0.10 mg/L to 0.15 mg/L with no apparent elution pattern. Total Iron from the final DI rinse of the third regeneration cycle averaged 0.04 mg/L with no apparent elution pattern.

5.7.2.7 Acidity – Regeneration Process

Acidity (the capacity of a solution to neutralize base) was monitored from tetrachloroferrate regeneration through composite sampling of effluent receiving containers. Acidity of the tetrachloroferrate regeneration effluent is shown in Figure 5-32 for all three regeneration cycles. As noted with the total iron, there is a lag in effluent acidity during the initial pumping of the technlorferrate regeneration solution. The highly acidic tetrachlorferrate solution is displacing the dilute acid used in the rinse process. The lag in acidity elution is significantly less than observed with total iron as shown in Figure 5-27. The effluent acidity stabilizes as the resin

becomes saturated and as it approaches the expected maximum value (400,000 mg/L as CaCO3 for a 4 Molar HCl solution such as that used here).

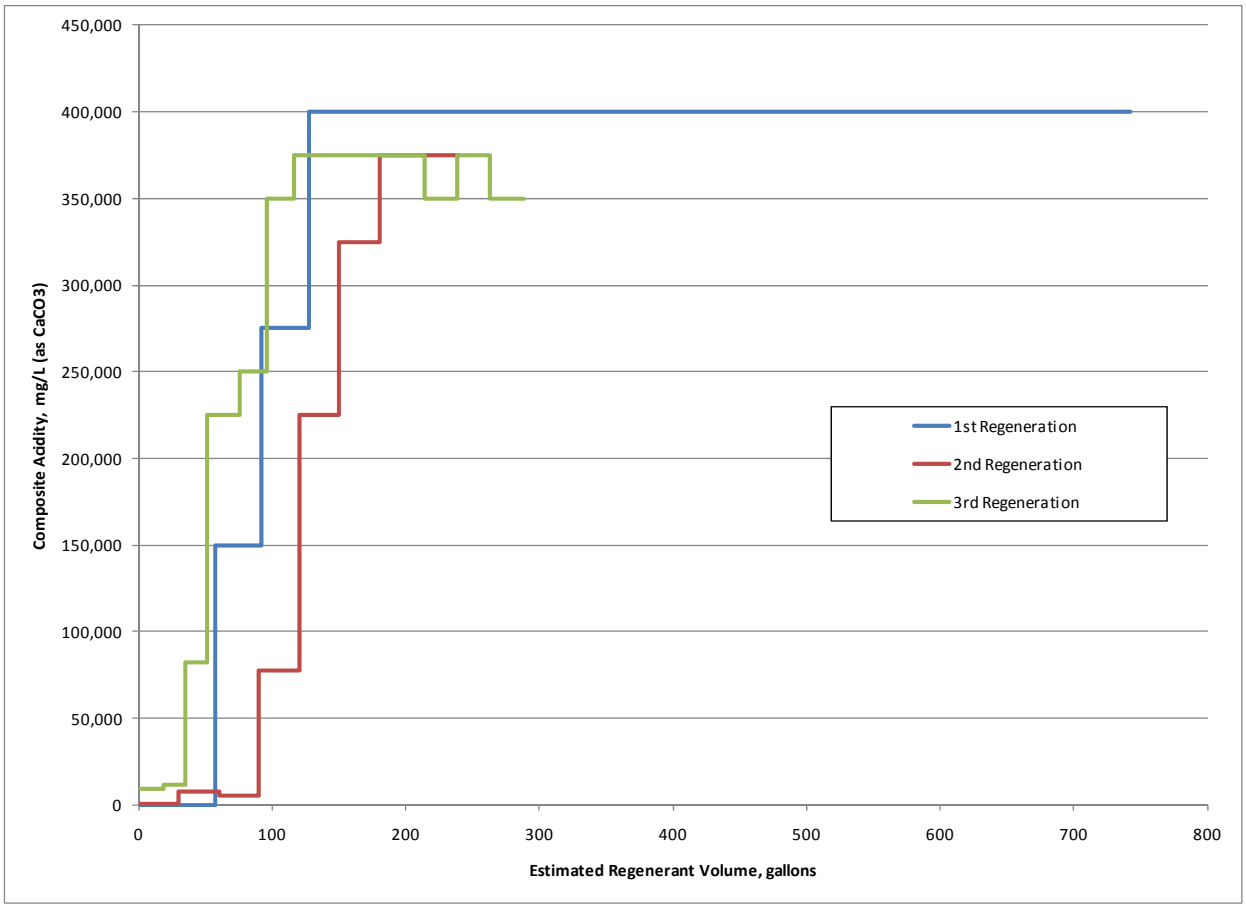

Figure 5-32. Composite Acidity Elution during Tetrachloroferrate Regeneration

After tetrachloroferrate regeneration, the resin was rinsed with dilute acid. Effluent acidity was monitored from this acid rinse by taking composite samples from the effluent receiving containers. Acidity elution in the acid rinse for the first and second regeneration cycles is shown in Figure 5-33; no samples were analyzed for this paramater during the acid rinse in the third regeneration cycle. Effluent acidity gradually declines with increasing acid rinse volume from near the value expected for the regenerant solution (400,000 mg/L) to approach but not reach the acidity of the dilute influent acid (10,000 mg/L).

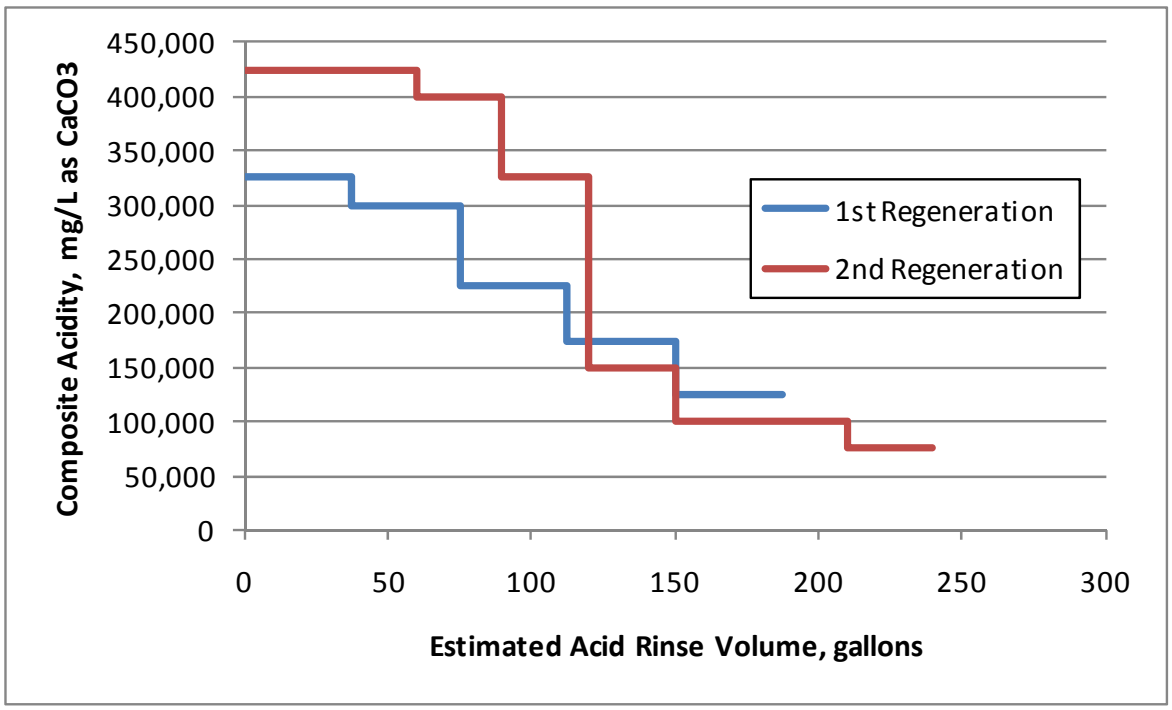

Figure 5-33. Composite Acidity Elution from the Acid Rinse during Regeneration

The acid rinse was followed by a second deionized water rinse and a nontoxic inorganic rinse during which no acidity samples were analyzed. After the nontoxic inorganic rinse, the resin was received a final DI rinse before transfer and shipment. Acidity was sampled periodically throughout the final DI rinse. Acidity from the final DI rinse of the first regeneration cycle dropped from a high of 50 to 30 mg/L as $CaCO_3$. Acidity from the final DI rinse of the second regeneration cycle was consistently below the reporting limit of 12 mg/L as $CaCO_3$. Acidity from the final DI rinse of the third regeneration cycle was consistently reported as 0 mg/L as $CaCO_3$ by the Calgon laboratory. These samples were analyzed with the Hach drop count titration Acidity method. These samples from the third regeneration cycle (Final Rinse) were completely titrated to a phenolphthalein end point with only one drop of titrant which led the laboratory to report the Acidity as zero. Since the increments for this titration are 5ppm, this can be considered as non-detect < 5 ppm acidity (as $CaCO_3$).

5.7.2.8 Nitrosamines – Regeneration Process

Samples from the regeneration procedure were analyzed for nitrosamines from all three regeneration cycles; nitrosamine results are summarized in Table 5-24. All eight target nitrosamines were found over the course of the three regeneration cycles. NDPA was quantified in only one sample, a composite sample from the first 2 BV tetrachloroferrate during the third regeneration cycle, at a concentration less than 2 percent of all nitrosamines quantified in the sample. Similarly, NEMA was only found in one sample, a composite of the last 2 BV tetrachloroferrate during the first regeneration cycle.

During the first regeneration cycle, the last 2 BV tetrachloroferrate, Tank E, contained modest concentrations of NDEA and NDMA. These were also found at modest concentrations in the acid rinse immediately following tetrachloroferrate regeneration, Acid Rinse. Subsequent rinses contained modest concentrations of NPIP and NDBA in addition to smaller amounts of NDEA and NDMA.

During the second regeneration, the tetrachloroferrate feed, Tank C, did not contain quantifiable concentrations of the eight target nitrosamines; this feed material excluded the first 2 BV tetrachloroferrate from the first regeneration cycle which had been collected in drums but included the last 4 BV tetrachloroferrate from the first regeneration cycle. A composite sample from the first 2 BV tetrachloroferrate, Regen Drum 5 (from ESTCP#2), contained moderate concentrations of NDBA, NDMA, and NMOR and more modest concentrations of NPYR, NDEA, and NPIP.

During the third regeneration cycle, much higher concentrations of nitrosamines were quantified from the dilute acid backwash, 0.1N Acid Wash Comp (BV1-10), than in the previous cycles. The tetrachloroferrate feed, Reactor Tank (Comp)(6/16-19/08), contained high concentrations of NMOR, NDMA, and NDEA; the feed material contained destruction reactor effluent from the second regeneration round [Reactor Composite (21+22+26)], untreated tetrachloroferrate effluent from the second regeneration round, and virgin tetrachloroferrate. The tetrachloroferrate effluent: Regen Drum-5 (from ESTCP#3), Regen Composite (Drum 3-> 10), and Tank-E Composite (BV5+6); contained significant concentrations of various nitrosamines but all were lower than the tetrachloroferrate influent.

Elevated concentrations of various nitrosamines are eluted from the resin in many of the regeneration process steps. The sampling plan was not designed to identify the source of the nitrosamines so it is not certain whether the recovered nitrosamines were removed from water during wellhead treatment and subsequently desorbed, inherent in the resin and leached through the regeneration process, created during the regeneration process, or produced after regeneration and prior to sampling. The dominant nitrosamine species appears to change through the regeneration process and may also change from loading cycle to loading cycle. Adsorption/desorption of nitrosamines or precursors is a likely cause of the progression of nitrosamine species.

Table 5-24. Nitrosamines Measured During Regeneration Processes

	Sample Name	Date Sampled	NDMA	NEMA	NDEA	NDPA	NMOR	NPYR	NPIP	NDBA
			ng/L	ng/L	ng/L	ng/L	ng/L	ng/L	ng/L	ng/L
First Regen Round	Acid Wash Tank	10/29/2007	**2.5**	< 2.0	< 2.0	< 2.0	< 2.0	< 2.0	< 2.0	**13**
	Tank E	7/19/2007	**16**	**7.1**	**17**	< 2.0	< 2.0	< 2.0	220	**3.1**
	Acid Rinse	7/19/2007	**27**	< 4.0	**42**	< 4.0	< 4.0	< 4.0	< 4.0	< 4.0
	DI Rinse (first)	7/20/2007	**12**	< 2.0	**4.0**	< 2.0	< 2.0	< 2.0	**12**	**2.8**
	Bicarbonate Rinse	7/24/2007	**12**	< 2.0	**6.2**	< 2.0	< 2.0	< 2.0	**16**	**52**
	DI Rinse (second)	7/21/2007	**14**	< 2.0	**3.0**	< 2.0	< 2.0	< 2.0	**19**	**2.5**
	DI Water	10/29/2007	**7.5**	< 2.0	< 2.0	< 2.0	< 2.0	< 2.0	< 2.0	< 2.0
Second Regen Round	Dilute Acid Backwash	12/19/2007	< 2.0	< 2.0	< 2.0	< 2.0	< 2.0	< 2.0	< 2.0	< 2.0
	Tank C	12/21/2007	< 2.0	< 2.0	< 2.0	< 2.0	< 2.0	< 2.0	< 2.0	< 2.0
	Regen Drum-5 (from ESTCP#2)	7/11/2008	**310**	< 10	**56**	< 10	**270**	**87**	**15**	**730**
	Tank E	12/21/2007	< 2.0	< 2.0	< 2.0	< 2.0	< 2.0	< 2.0	< 2.0	< 2.0
	Acid Rinse Barrel 8	12/21/2007	< 2.0	< 2.0	< 2.0	< 2.0	< 2.0	< 2.0	< 2.0	< 2.0
	Second DI Rinse	12/19/2007	**4.6**	< 2.0	< 2.0	< 2.0	< 2.0	< 2.0	< 2.0	**6.7**
	DI Blank	12/19/2007	< 2.0	< 2.0	< 2.0	< 2.0	< 2.0	< 2.0	< 2.0	< 2.0
Third Regen	Pittsburgh Water Blank	6/6/2008	< 2.0	< 2.0	< 2.0	< 2.0	**14**	< 2.0	< 2.0	< 2.0
	Backwash Initial (from ESTCP #3)	7/11/2008	**2**	< 2.0	< 2.0	< 2.0	**9**	< 2.0	< 2.0	**3.7**
	0.1N Acid Wash Comp (BV1-10)	7/9/2008	**100**	< 20	**40**	< 20	**99**	< 20	**52**	**55**
	Reactor Composite (21+22+26)	6/9/2008	**64**	< 2.0	**150**	< 2.0	**240**	< 2.0	**13**	**550**
	Reactor Tank(Comp)(6/16-19/08)	6/24/2008	**4300**	< 100	**1500**	< 100	**6400**	< 100	**150**	**230**
	Regen Drum-5 (from ESTCP#3)	7/11/2008	**2500**	< 20	**250**	**76**	**1100**	**230**	**250**	**190**
	Regen Composite (Drum 3-> 10)	7/9/2008	**220**	< 2.0	**34**	< 2.0	**45**	**11**	**21**	**26**
	Tank-E Composite (BV5+6)	7/10/2008	**2300**	< 20	**37**	< 20	**48**	< 20	**40**	**28**
	Rinse Composite (1-> 8)	7/9/2008	**1500**	< 20	**440**	< 20	**1200**	< 20	**87**	**69**
	Final Tap H2O Rinse	7/9/2008	< 2.0	< 2.0	< 2.0	< 2.0	**2.9**	< 2.0	< 2.0	**2.6**

5.7.2.9 VOCs

Samples selected using professional judgment were analyzed for VOCs throughout the regeneration process during all three regeneration rounds. Several VOC were found as documented in appendix C. The dominant VOCs included: chloromethane, 1,2-dichloroethane, and chloroform. Although several VOCs were generated in the destruction process, this is clearly not the only source of VOC, since they were present in tetrachloroferrate solutions that did not contain reactor destruction products. Furthermore, chloromethane was also present in the first cycle tetrachloroferrate effluent from the regeneration vessel. It is unclear whether the VOCs are:

- present below detection limits in the groundwater and concentrated on the resin during field treatment and then desorbed during regeneration (although IX resins are not designed to sorb neutral trace organics, since they are organic polymers this mechanism is possible),
- entered the process as contaminants in the reagents used, or
- were created through some chemical reaction during the ion-exchange or regeneration process.

It is clear that VOCs can be effectively removed from the regenerated resin for field re-use, because VOCs were only an issue in the field after the first regeneration (see Section 5.7.1.19). During this first regeneration cycle, the resin was rinsed in an atypical direction because of plumbing issues and it was also performed using newly constructed PVC piping.

During the first regeneration cycle, 47 µg/L of chloromethane was found in the tetrachloroferrate effluent at BVs 5 and 6. The appearance of this VOC was not associated with the destruction reaction since it preceded destruction operations.

During the second regeneration cycle, 470 µg/L of chloromethane and 110 µg/L of 1,2-dichloroethane were found in the tetrachloroferrate feed. This tetrachloroferrate contained recycled and fresh tetrachloroferrate but none that had passed through the perchlorate destruction reactor. During the second regeneration cycle, 200 µg/L of chloromethane and 180 µg/L of 1,2-dichloroethane were found in the second BV tetrachloroferrate effluent from the regeneration vessel.

During the third regeneration cycle, no VOCs were found above reporting limits in the tetrachloroferrate feed at the time it was used for regeneration. However, VOCs had been identified in some recycle material from the destruction reactor that was later used to make up this tetrachloroferrate feed. It seems likely that some VOCs were lost, perhaps due to volatilization, from this tetrachloroferrate in storage. The storage vessels were not designed to contain VOCs and the storage period was long (see Figure 5-9).

A composite sample from the first 2 BVs of tetrachloroferrate effluent in the third regeneration cycle contained 140 µg/L of chloromethane and 120 µg/L of 1,2-dichloroethane while the composite from BVs 5-6 of tetrachloroferrate effluent contained 56 µg/L of chloromethane and

<10 µg/L of 1,2-dichloroethane. These samples support the hypothesis that VOCs are desorbed and/or created during the tetrachloroferrate regeneration step.

Carbon tetrachloride (CT) was not observed in analyses of tetrachloroferrate regenerant solution at any time during the demonstration. Three µg/L of CT was, however, observed in each of the two rinse samples collected at the end of the first regeneration round. CT never again appeared in rinse samples in succeeding rounds. As discussed in Section 5.7.1.19, CT also was observed in one effluent sample after this resin was installed at Fontana. We thus suspect that this is an isolated one time occurrence.

5.7.2.10 SVOCs and N/P Pesticides

Samples selected, using professional judgment, were analyzed for SVOCs and Pesticides throughout the regeneration process during all three regeneration rounds. No SVOC or N/P pesticides were found above the reporting limit for any of the regeneration samples including tetrachloroferrate regenerant, dilute acid washes, dilute acid rinses, or other water rinses. Data is provided in Appendix C.

5.7.3 Destruction Unit Process Sampling Results

A portion of the effluent tetrachloroferrate regenerant from the first and second regeneration cycles were selected for treatment in the destruction reactor. Liquid ferrous iron was added to provide reducing power. A series of parametric tests was performed with the tetrachloroferrate regenerant from the first regeneration cycle. A series of destruction runs was performed at production conditions with tetrachloroferrate regenerant from the second regeneration cycle followed by a final series of parametric destruction tests. The reactor was normally flushed after each run with an acid solution. During some parametric destruction runs a change in flow rate and/or reaction temperature occurred without an intervening acid flush.

5.7.3.1 Perchlorate - Destruction

During the first set of destruction tests, the feed to the destruction reactor was typically sampled once for each run. Effluent was sampled periodically although the destruction runs, with varying numbers of samples per run; the focus of the parametric tests in the first destruction cycle was to obtain steady state data. Assuming a plug flow reactor model, reactor effluent would have been expected to approach steady state after 2 or 3 reactor volumes. Figure 5-34 shows the perchlorate effluent concentration from a parametric destruction run at a temperature of 169 °C and a residence time of 2.8 hours. Feed for this run commenced at 08:15 on 10/02/2007. The effluent perchlorate concentration does not appear to have completely stabilized over the 20 hours of operation – it shows a slow upward drift. There appears to have been a period of perchlorate stability beginning at 16:00 on 10/02/2007 but this period is characterized by large changes in other reactants, for example the instability of ferrous iron concentration is shown in Figure 5-34 for illustrative purposes. Thus, effluent concentrations based on a short duration run are likely representative of a pseudo-steady state and should be used with caution in extending this work. End-of-run reactant results from the first destruction cycle parametric tests are presented in Table 5-25. We believe that these end-of-run results are as close to steady state as is available.

Perchlorate concentrations at the influent to the destruction reactor ranged from 602-622 mg/L. Perchlorate concentrations at the effluent to the destruction reactor ranged from < 1.25 mg/L to 122 mg/L. All of the parametric tests at 188-190 °C produced effluent perchlorate concentrations of < 1.25 mg/L. Effluent perchlorate concentrations when the reactor was operated at cooler temperatures of 169-177 °C were higher. In the 22-23 mL/min flow rate reactor runs the destruction of perchlorate increased sharply as temperature increased.

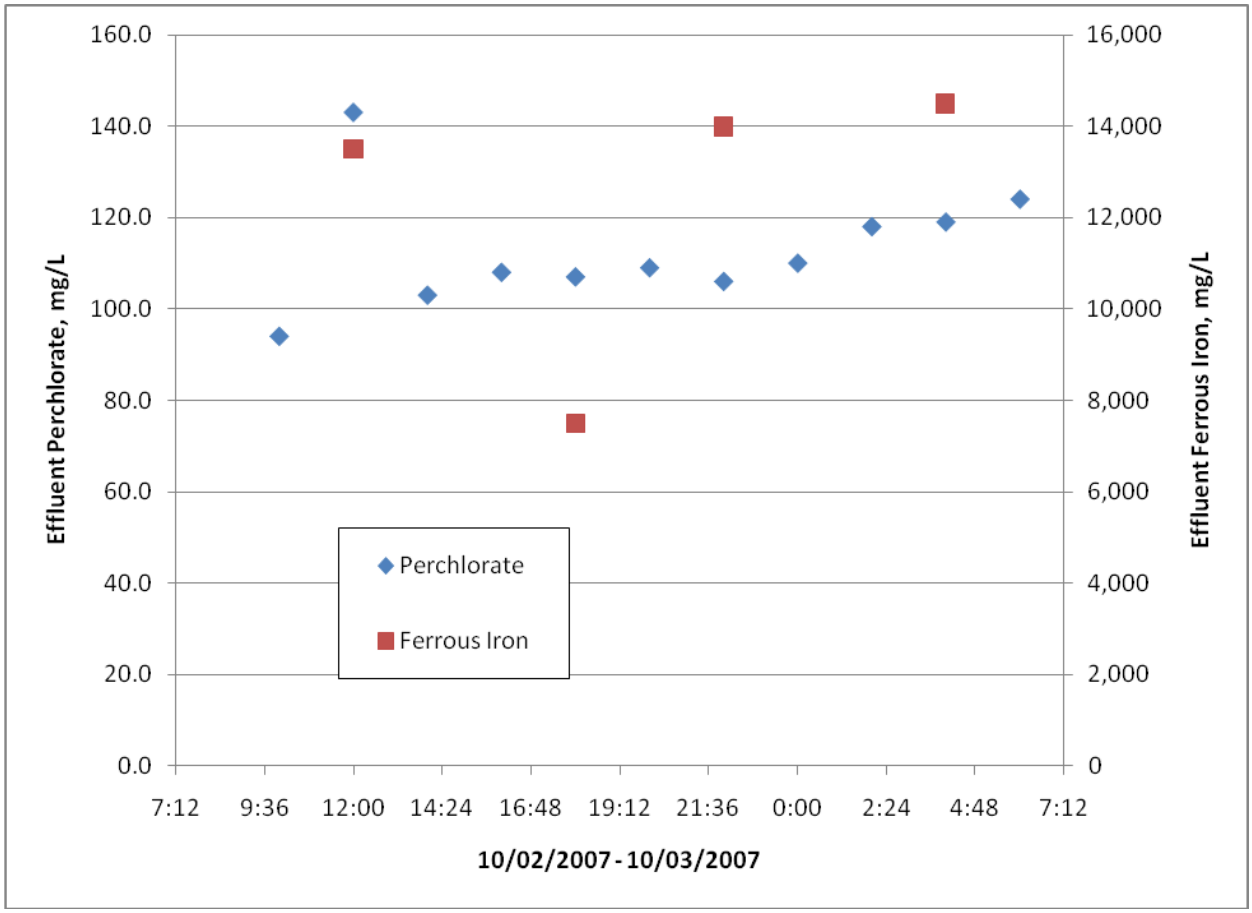

Figure 5-34: Typical Destruction Reactor Perchlorate Effluent Profile during First Destruction Cycle Parametric Tests (Temperature 169 C, Residence Time 2.8 hours)

Table 5-25. Summary of Reactants from Parametric Destruction Tests during First Destruction Cycle (flow rates 20-23 mL/min green shaded, 40-45 mL/min blue shaded)

	Flow, mL/min	Temp, C	Location	CLO4-, mg/L	NO3-, mg/L	NO2-, mg/L	Fe(II), mg/L
10/03/07 04:00	22	169	Influent	602	5607	1630	24500
10/03/07 06:00			Effluent	122	498	3460	14500
10/04/07 08:00	23	177	Influent	613	4370	2810	27000
10/04/07 12:00			Effluent	14.4	971	4040	14500
10/11/07 15:00	23	190	Influent	612	3990	2660	25500
10/12/07 09:00			Effluent	< 1.25	682	3517	13500
11/17/07 14:00	44	188	Influent	621	5450	2600	26500
11/17/07 18:00			Effluent	< 1.25	360	4640	13500
11/20/07 14:00	58	189	Influent	622	5450	2560	31000
11/20/07 14:00			Effluent	< 1.25	492	4905	18000
11/20/07 17:00	58	177	Influent	622	5450	2560	31000
11/20/07 19:00			Effluent	87.6	377	5100	12500
11/21/07 01:00	59	177	Influent	622	5450	2560	31000
11/21/07 03:00			Effluent	101	339	5780	12250
11/21/07 21:00	44	177	Influent	622	5450	2560	31000
11/21/07 21:00			Effluent	28.7	380	5490	18500

After the second regeneration cycle, a "production" series of destruction runs were performed on a portion of the second regeneration tetrachloroferrate effluent. During this period runs were performed daily for approximately 8 hours and the system was left idle overnight. The tetrachloroferrate regenerant was not homogenized prior to destruction in this series resulting in a wide range of composition at the destruction reactor influent. Perchlorate concentrations for influent and effluent to the destruction reactor for these runs are summarized in Table 5-26. Influent perchlorate concentrations ranged from 155 to 1,550 mg/L depending on the source material used. Influent material was managed to some extent to reduce operational problems. The effluent from the destruction reactor was sampled as a composite and is not likely representative of steady-state conditions. Effluent perchlorate concentrations ranged from < 1.25 to 206 mg/L.

Table 5-26. Summary of Reactants from Production Destruction Runs during Second Destruction Cycle

Date	Temp, C	Flow, mL/min	Location[a]	CLO4-, mg/L	NO3-, mg/L	Fe(II), mg/L
1/24/2008	186-188	59-63	Drum 7			
1/28/2008	189-190	57-63	Drum 7			
			Effluent Comp	< 1.25	< 50	
1/29/2008	188-190	57-63	Drum 7	503	101	
			Effluent Comp	< 1.25	99	33500

Date	Temp, C	Flow, mL/min	Location[a]	CLO4-, mg/L	NO3-, mg/L	Fe(II), mg/L
1/30/2008	190	57-62	Drum 7			
			Effluent Comp			
1/31/2008	190-191	57-62	Drum 7	482	99	37000
			Effluent Comp	< 1.25	106	32500
2/4/2008	190-191	56-63	Drum 7			
			Effluent Comp			
2/5/2008	190	55-63	Drum 7			
			Effluent Comp			
2/6/2008	190-191	56-63	Drum 6	1550	12400	26000
			Effluent Comp	13	60	23500
2/7/2008	190	26-30	Drum 6 + Drum 8			
			Effluent Comp			
2/8/2008	190-191	27-31	Drum 6 + Drum 8	672	3570	32000
			Effluent Comp	7.09	226	13500
2/11/2008	190-191	29-39	Drum 6 + Drum 8			
			Effluent Comp			
2/12/2008	190	29-32	Drum 6 + Drum 8	592	3370	27500
			Effluent Comp	< 1.25	180	13000
2/19/2008	186-190	10-45	Drum 6 + Drum 8	781	6700	21300
			Effluent Comp	206	186	1200
2/20/2008	183-190	18-90	Drum 6 + Drum 8	766	6900	20500
			Effluent Comp	115	636	1350
2/21/2008	183-189	36-51	Drum 8	206	308	38500
			Effluent Comp	< 1.25	< 50	34000
2/25/2008	183-185	42-52	Drum 8	165	55	39500
			Effluent Comp	< 1.25	< 50	35500
2/26/2008	182-183	50-51	Drum 8	162	< 50	37500
			Effluent Comp	< 1.25	< 50	40250
2/27/2008	182-190	52-60	Drum 8	158	< 100	36750
			Effluent Comp	< 1.25	< 100	41000
2/28/2008	189-190	57-60	Drum 8	155	< 100	42250
			Effluent Comp	< 1.25	< 100	35750
3/4/2008	190-191	18-120	Drum 6 + tank E	551	4870	34250
			Effluent Comp	< 1.25	204	38000
3/6/2008	190-191	20-122	Drum 6 + tank E	537	5310	41750
			Effluent Comp	1.85	354	24500
3/10/2008	189-191	23-60	Drum 6 + tank E	527	5490	41000
			Effluent Comp	42.7	419	12000
3/11/2008	187-190	45-63	Drum 6 + tank E	461	3070	31000
			Effluent Comp			
3/12/2008	189-190	27-58	Drum 6 + tank E	371	2730	33500
			Effluent Comp	< 1.25	275	22000
3/13/2008	189-190	41-58	Drum 6 + tank E	373	2800	34500
			Effluent Comp	< 1.25	244	17500

[a] Location designates the feedstock source (i.e. drum or tank), listed first, followed by effluent destination.

After the "production" destruction runs, a second series of parametric tests were performed with some of the remaining tetrachloroferrate regenerant from the second regeneration cycle. While the first set of parametric tests ranged from 169 to 190C with flows from 22-59 mls/min this second set ranged from 161-181 °C at flows from 20-40 mls/min. The second set of destruction parametric tests were run with an influent perchlorate concentration approximately half that used in the first set but a similar nitrate influent concentration. A single sample was collected to reflect influent perchlorate concentration from the homogenate used during the second set of parametric tests. These tests were relatively short with a single effluent sample extracted near the end of the test. Perchlorate concentrations during these tests are summarized in Table 5-27. The sample date on the influent sample is believed to be subject to a recording error; a sample date of 03/24/2008 is likely but cannot be confirmed. At a 40 mL/min flow rate, effluent concentration declined as temperature increased from 157 mg/L at 161 °C to 2.39 mg/L at 180 C. At 20 mL/min flow rate, effluent concentration declined as temperature increased from 95.7 mg/L at 161 °C to < 1.25 mg/L at 181 C. These results were consistent in both sets of parametric tests (tables 5-25 and 5-27). Results of both sets of parametric tests are inter-compared in Section 6.4.

Table 5-27. Summary of Reactants from Parametric Destruction Tests during Second Destruction Cycle (flow rates 20-23 mL/min green shaded, 40-45 mL/min blue shaded)

	Flow, mL/min	Temp, C	Location	CLO4-, mg/L	NO3-, mg/L	Fe(II), mg/L
02/24/08 15:00			Influent	332	3690	28000
03/19/08 16:00	21	161	Effluent	95.7	509	8500
03/20/08	40	161	Effluent	157	1940	1150
03/20/08 17:30	40	171	Effluent	70.4	727	1350
03/21/08 15:00	20	170	Effluent	16.0	1540	1200
03/22/08 15:00	20	181	Effluent	< 1.25	446	13000
03/24/08 15:00	40	180	Effluent	2.39	912	13500

5.7.3.2 Nitrate - Destruction

The feed to the destruction reactor was typically sampled once for each run. Effluent was sampled periodically although the destruction runs with varying schedules; the focus of the parametric tests in the first destruction cycle was to obtain steady state data. Assuming a plug flow reactor model, reactor effluent would have been expected to approach steady state after two or three reactor volumes. Figure 5-35 shows the nitrate and nitrite effluent concentration from a parametric destruction run at a temperature of 169 °C and a residence time of 2.8 hours. Feed for this run commenced at 08:15 on October 2, 2007. The effluent nitrate and nitrite concentrations appear to have stabilized after 20 hours of operation. Although the nitrate concentration appears to have stabilized, the ferrous iron concentration continues to rise after 20 hours of operation. Effluent concentrations based on a short duration run are likely representative of a pseudo-steady state and should be used with caution in extending or scaling up this work. Representative reactant results from the first destruction cycle parametric tests are presented in Table 5-25.

Influent nitrate concentrations for the first round parametric tests ranged from 3990 to 5607 mg/L. Effluent nitrate concentrations ranged from 339 to 971 mg/L.

Nitrite was also evaluated in the first round of parametric tests. Reactor influent nitrite concentrations ranged from 1630 to 2,810 mg/L. Effluent nitrite concentrations ranged from 3,460 to 5,780 mg/L. This significant increase in nitrite concentration through the reactor appeared to be coincident with a significant decrease in nitrate concentration.

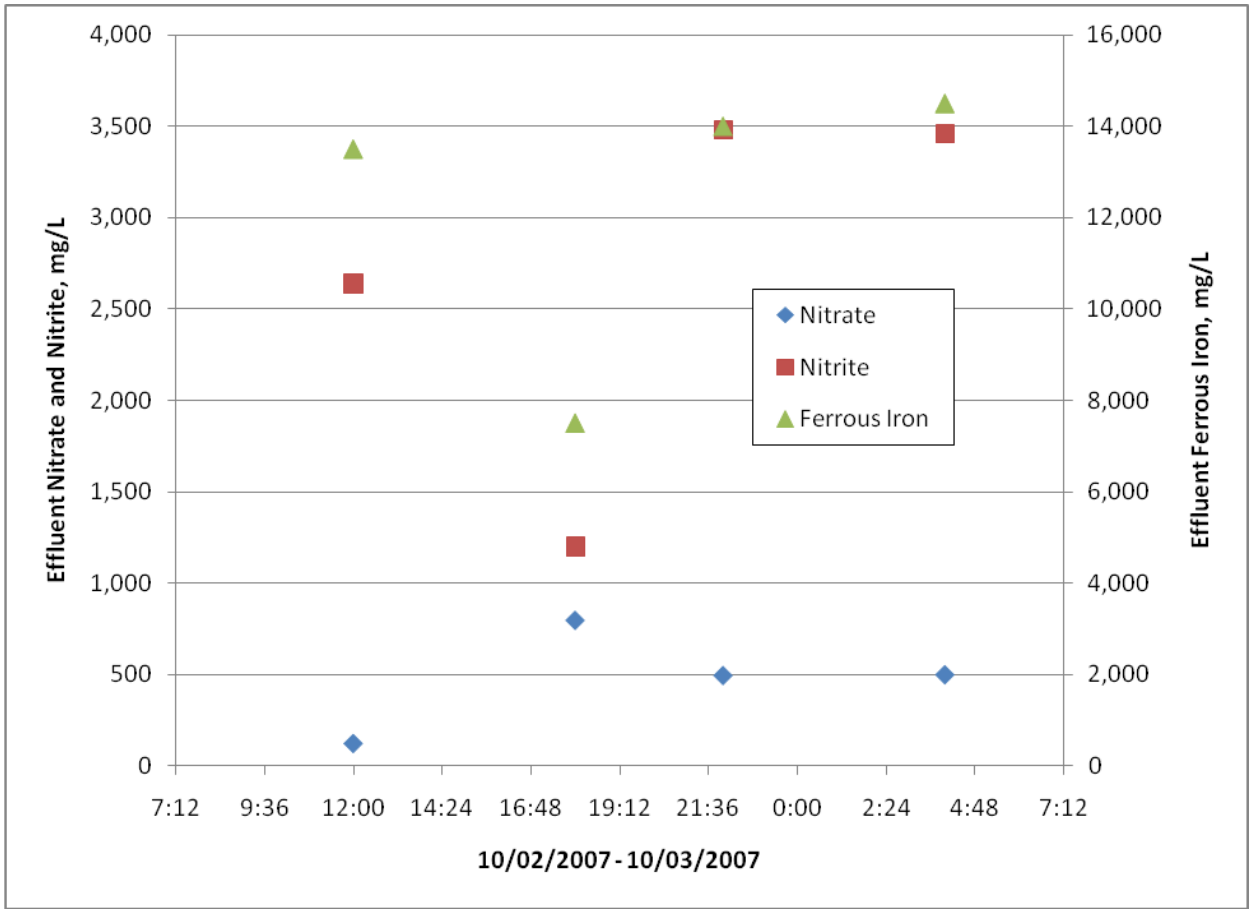

Figure 5-35: Typical Destruction Reactor Nitrate Effluent Profile during First Destruction Cycle Parametric Tests

After the second regeneration cycle, a second series of destruction runs were performed on a portion of the second regeneration tetrachloroferrate effluent. The tetrachloroferrate regenerant was not homogenized prior to destruction resulting in a wide range of composition at the destruction reactor influent. Nitrate concentrations for influent and effluent to the destruction reactor for these runs are summarized in Table 5-26; nitrite concentrations were not determined separately for the second destruction cycle. Influent nitrate concentrations ranged from < 50 to 12,400 mg/L depending on the source. Influent material was managed to some extent to reduce operational problems. The effluent from the destruction reactor was sampled as a composite and is not likely representative of steady-state conditions. Effluent nitrate concentrations ranged from

< 50 to 636 mg/L. In general there was considerable removal of nitrate across the destruction reactor when the feed concentration was above 1,000 mg/L nitrate.

After the bulk destruction runs, a series of parametric tests were performed with a homogenate prepared with a portion of the remaining tetrachloroferrate regenerant from the second regeneration cycle. A single sample was collected to reflect influent nitrate concentration during the parametric tests. These tests were relatively short with a single effluent sample extracted near the end of the test. Nitrate concentrations during these tests are summarized in Table 5-27. The sample date on the influent sample is believed to be a recording error; a sample date of 03/24/2008 is likely but cannot be confirmed. There are no clear patterns in the effluent nitrate concentrations in this dataset other than that the effluent was always below the influent concentration. Nitrate removal in the destruction reactor does not show the same clear dependence on increasing temperature seen for perchlorate removal.

5.7.3.3 Sulfate- destruction unit process

Sulfate was monitored from the influent and effluent of the destruction reactor during the first and second destruction rounds parametric tests and the second destruction round production tests. Calgon's analysis results are presented in tables 5-28, 5-29, and 5-30. In the first destruction round parametric tests, sulfate dropped from nominally 800 mg/L to nominally 250 mg/L between the 11/17/2007 tests and the 11/20/2007 tests; this presumably reflects slightly different composition of different batches of feedstock. Sulfate concentrations in the second destruction round were nominally 300 mg/L for both the parametric and production tests. Sulfate appears to be conserved across the destruction reactor being neither liberated nor destroyed.

Table 5-28. Summary of Major Conserved Analytes from Parametric Destruction Tests during First Destruction Cycle

	Flow, mL/min	Temp, C	Location	SO_4=, mg/L	Total Fe, mg/L	Acidity, mg $CaCO_3$/L
10/03/07 04:00	22	169	Influent	794	83000	375000
10/03/07 06:00			Effluent	801	82500	350000
10/04/07 08:00	23	177	Influent	842	84000	375000
10/04/07 12:00			Effluent	750	82500	
10/11/07 15:00	23	190	Influent	878	81500	350000
10/12/07 09:00			Effluent	740	80500	350000
11/17/07 14:00	44	188	Influent	692	80000	375000
11/17/07 18:00			Effluent	401	81000	350000
11/20/07 14:00	58	189	Influent	246	78500	375000
11/20/07 14:00			Effluent	293	78500	375000
11/20/07 17:00	58	177	Influent	246	78500	375000
11/20/07 19:00			Effluent	240	77500	350000
11/21/07 01:00	59	177	Influent	246	78500	375000
11/21/07 03:00			Effluent	271	78000	350000
11/21/07 21:00	44	177	Influent	246	78500	375000
11/21/07 21:00			Effluent	234	79500	375000

Table 5-29. Summary of Major Conserved Analytes from Production Destruction Runs during Second Destruction Cycle

Date	Temp, C	Flow, mL/min	Location	SO4=,mg/L	Total Fe, mg/L	Acidity, mg CaCO3/L
1/24/2008	186-188	59-63	Drum 7			
1/28/2008	189-190	57-63	Drum 7			
			Effluent Comp	306		325000
1/29/2008	188-190	57-63	Drum 7	330		375000
			Effluent Comp	311	51500	350000
1/30/2008	190	57-62	Drum 7			
			Effluent Comp			
1/31/2008	190-191	57-62	Drum 7	309	87500	375000
			Effluent Comp	314	55500	375000
2/4/2008	190-191	56-63	Drum 7			
			Effluent Comp			
2/5/2008	190	55-63	Drum 7			
			Effluent Comp			
2/6/2008	190-191	56-63	Drum 6	328	76000	325000
			Effluent Comp	321	86500	350000
2/7/2008	190	26-30	Drum 6 + Drum 8			
			Effluent Comp			
2/8/2008	190-191	27-31	Drum 6 + Drum 8	329	85500	325000
			Effluent Comp	331	78000	300000
2/11/2008	190-191	29-39	Drum 6 + Drum 8			
			Effluent Comp			
2/12/2008	190	29-32	Drum 6 + Drum 8	321	87000	350000
			Effluent Comp	328	86000	350000
2/19/2008	186-190	10-45	Drum 6 + Drum 8	333	84000	350000
			Effluent Comp	387	80500	350000
2/20/2008	183-190	18-90	Drum 6 + Drum 8	329	84500	375000
			Effluent Comp	360	83500	350000
2/21/2008	183-189	36-51	Drum 8	321	89000	375000
			Effluent Comp	375	86000	350000
2/25/2008	183-185	42-52	Drum 8	285	90000	350000
			Effluent Comp	360	85000	350000
2/26/2008	182-183	50-51	Drum 8	294	90000	375000
			Effluent Comp	340	88500	375000

Date	Temp, C	Flow, mL/min	Location	SO4=,mg/L	Total Fe, mg/L	Acidity, mg CaCO3/L
2/27/2008	182-190	52-60	Drum 8	423	88500	375000
			Effluent Comp	356	88000	350000
2/28/2008	189-190	57-60	Drum 8	397	88000	375000
			Effluent Comp	356	86500	350000
3/4/2008	190-191	18-120	Drum 6 + tank E	358	85500	375000
			Effluent Comp	359	88500	325000
3/6/2008	190-191	20-122	Drum 6 + tank E	355	92000	375000
			Effluent Comp	329	81500	325000
3/10/2008	189-191	23-60	Drum 6 + tank E	355	93500	350000
			Effluent Comp	537	81500	325000
3/11/2008	187-190	45-63	Drum 6 + tank E	345	81500	375000
			Effluent Comp			
3/12/2008	189-190	27-58	Drum 6 + tank E	275	85500	375000
			Effluent Comp	269	82500	350000
3/13/2008	189-190	41-58	Drum 6 + tank E	283	86000	375000
			Effluent Comp	283	82500	350000

Table 5-30. Summary of Major Conserved Analytes from Parametric Destruction Tests during Second Destruction Cycle

	Flow, mL/min	Temp, C	Location	SO4=, mg/L	Total Fe, mg/L	Acidity, mg CaCO3/L
02/24/08 15:00			Influent	331	83000	325000
03/19/08 16:00	21	161	Effluent	312	77500	325000
03/20/08	40	161	Effluent	333	84000	350000
03/20/08 17:30	40	171	Effluent	307	86500	325000
03/21/08 15:00	20	170	Effluent	342	80500	325000
03/22/08 15:00	20	181	Effluent	317	84500	325000
03/24/08 15:00	40	180	Effluent	288	77000	300000

5.7.3.4 NDMA, NDEA, and NDPA in destruction unit process

Samples were analyzed for nitrosamines from the parametric destruction tests performed after the first and second regeneration rounds; nitrosamine results are summarized in Table 5-31. Eight target nitrosamines were quantified in destruction reactor effluent. Modest amounts of NEMA were quantified from a single sample and were below reporting limits in all others.

Table 5-31. Nitrosamines Measured During Parametric Destruction Tests

	Sample Name	Date Sampled	NDMA	NEMA	NDEA	NDPA	NMOR	NPYR	NPIP	NDBA
			ng/L	ng/L	ng/L	ng/L	ng/L	ng/L	ng/L	ng/L
First Destruction Round	Feedstock	10/15/2007	**8400E**		**890E**	**8.9**				
	10-12' Destruction Solution[a]	10/12/2007	**420**		**28**	< 4.0				
Second Destruction Run	Reactor Feed (3/24/08)(13:00)	3/24/2008	**4800**	< 100	**530**	< 100	**2000**	< 100	**220**	**3300**
	Reactor Out (160/20)[b]	3/19/2008	**12**	< 2.0	< 2.0	< 2.0	< 2.0	**47**	**5.5**	**1400E**
	Reactor Out(160/40)[b]	3/20/2008	**2100**	< 100	**890**	< 100	**1600**	< 100	< 100	**1600**
	Reactor Out (170/40)[b]	3/20/2008	**670**	< 2.0	**2400**	**4.4**	**54**	**150**	**38**	**1100**
	Reactor Out(170/20)[b]	3/21/2008	**250**	**14**	< 10	< 10	**160**	**56**	**44**	**550**
	Reactor Out(180/40)[b]	3/24/2008	< 2.0	< 2.0	< 2.0	< 2.0	< 2.0	**59**	**16**	**310**
	Reactor Out(180/20)[b]	3/24/2008	**180**	< 2.0	**270**	**3**	**54**	**870E**	**120**	**16000E**

E: estimated value; exceeds calibrated range.

[a] Reaction temperature of 190 °C, feedrate of 23 mL/minute

[b] Parenthetical notation is nominal temperature in °C/ nominal flow rate in mL/minute

The feedstock for the first destruction round was derived from the first 2 BV tetrachloroferrate from the first regeneration round. The feedstock contained high concentrations of NDMA and lower concentrations of both NDEA and NDPA; the other five nitrosamines on the typical nitrosamine target list were not included on the target list for the first destruction round. This result in the effluent feed appears to be consistent with the elution of high nitrosamine concentrations in the early stages of tetrachloroferrate regeneration. The destruction reactor effluent sample, 10-12' Destruction Solution, was taken from the destruction reactor operating at 190 °C with a feed of 23 mL/minute, a nominal 2.7 hour average residence time. Concentration of NDMA, NDEA, and NDPA in the destruction reactor effluent was significantly reduced from the feedstock concentration.

The feedstock for the second destruction round was derived from the first 2 BV tetrachloroferrate and the last 2 BV tetrachloroferrate from the second regeneration round. The feedstock contained high concentrations of NDMA, NDBA, and NMOR. This feedstock characterization again appears to be consistent with the elution of high nitrosamine concentrations in the early stages of tetrachloroferrate regeneration. Effluent samples were collected from the destruction reactor during each of the second round parametric tests, varying the reaction temperature from 160 to 180 °C and the feed rate from 20 to 40 mL/minute. In general, the nitrosamines appear to be destroyed in the reactor. The extent of the destruction reaction generally increases with higher temperature and longer residence time. In contrast, the effluent from the 180 °C test with 3 hour residence time, Reactor Out (180/20), appears to have generated significantly higher concentrations of NDBA and NPYR than found in the feedstock; a review of the analytical report has given no reason to suspect these results are in error although the concentrations are estimates as a result of exceeding the calibrated range of the instrument. Other nitrosamines from the effluent of this same 180 °C test with three-hour residence time are at higher concentration than found in the sample from the 180 °C test with 1.5 hour residence time. Further, NDEA concentrations in two of the second round parametric tests were higher than the concentration in the feedstock. These data suggest that both destruction and formation of nitrosamines may be occurring in the destruction reactor. As discussed above in Section 5.7.3.1 the destruction reactions unexpectedly had not reached steady state after a substantial period of operation, this may account for some of the variability in the nitrosamine concentrations in the effluent.

5.7.3.5 pH – destruction reactor

Samples were analyzed for pH from the parametric destruction tests performed after the first and second regeneration rounds. pH samples were collected from the feedstock and the effluent of the destruction reactor. Samples were consistently less than pH 2. This is consistent with the tetrachloroferrate source material which was intended to contain 4 molar HCl. Samples from the first destruction round were reported as pH 2.00; this specific result is suspect as a reporting artifact.

5.7.3.6 TDS

Samples were analyzed for TDS from the parametric destruction tests performed after the first and second regeneration rounds. In the first destruction round, both the feedstock and the destruction reactor effluent contained 220,000 mg/L TDS; no change in TDS was observed as a

result of destruction operations. During the second destruction round, the effluent of the parametric tests averaged 590,000 mg/L TDS, slightly lower than the TDS of the feedstock. Although the absolute TDS concentration is significantly different in the first and second destruction round feedstocks, the difference does not appear to be important to the performance of the technology.

5.7.3.7 TOC

Samples were analyzed for TOC from the parametric destruction tests performed after the first and second regeneration rounds. The feedstock for the first destruction round contained 33 mg/L TOC; significantly higher than the effluent from the parametric test at 190 °C and 2.7 hour average residence time, 10-12' Destruction Solution.

The feedstock for the second destruction round contained substantially lower concentration of TOC (8.3 mg/l) compared to the first destruction round feedstock. The destruction reactor effluent TOC varied considerably, between 1.6 and 5.8 mg/L, over the parametric tests. TOC concentrations are quite high relative to VOC and nitrosamine concentrations. There is sufficient TOC to account for VOCs, nitrosamines, or their precursors in the destruction reactor feedstocks and effluents.

5.7.3.8 Chloride

Samples were analyzed for chloride from the parametric destruction tests performed after the first and second regeneration rounds. In the first destruction round, both the feedstock and the destruction reactor effluent contained 230,000 mg/L chloride; no change in chloride was observed as a result of destruction operations. During the second destruction round, the effluent of the parametric tests averaged 275,000 mg/L chloride; the average was not significantly different from the feedstock chloride concentration.

5.7.3.9 Fluoride

Samples were analyzed for fluoride from the parametric destruction tests performed after the first and second regeneration rounds. No fluoride was detected at the dilution required to perform the analysis.

5.7.3.10 Title 22 Metals and Major Cations

Samples were analyzed for Title 22 metals from the parametric destruction tests performed after the first and second regeneration rounds; the major cations: calcium, potassium, magnesium and sodium; were not evaluated in the destruction tests. The analytical results are summarized in Table 5-33. Aluminum, chromium, copper, and Nickel were the most abundant of the Title 22 metals found and were comparable between the first and second destruction cycle. Destruction reactor effluents from both the first and second destruction rounds contained approximately the same concentrations of Title 22 metals on average as their respective feedstocks.

Table 5-32. General Water Quality Parameters Measured during Parametric Destruction Tests

Sample Name		Date Sampled	pH	TDS	TOC	Chloride	Fluoride
				mg/L	mg/L	mg/L	mg/L
First Destruction Round	Feedstock	10/15/2007	2.00	220000	33	230000	< 100
	10-12' Destruction Solution[a]	10/12/2007	2.00	220000	3.4	230000	< 100
Second Destruction Run	Reactor Feed (3/24/08)(13:00)	3/24/2008	< 2	730000	8.3	280000	< 200
	Reactor Out (160/20)[b]	3/19/2008	< 2	670000	1.6	240000	< 100
	Reactor Out(160/40)[b]	3/20/2008	< 2	610000	5.8	290000	< 200
	Reactor Out (170/40)[b]	3/20/2008	< 2	520000	4.3	270000	< 200
	Reactor Out(170/20)[b]	3/21/2008	< 2	600000	5.2	310000	< 200
	Reactor Out(180/40)[b]	3/24/2008	< 2	560000	4.2	240000	< 200
	Reactor Out(180/20)[b]	3/24/2008	< 2	590000	4.2	300000	< 200

[a] Reaction temperature of 190 °C, feedrate of 23 mL/minute
[b] Parenthetical notation is nominal temperature in °C/ nominal flow rate in mL/minute

5.7.3.11 Dissolved Fe

Samples were analyzed for dissolved Fe from the parametric destruction tests performed after the first and second regeneration rounds. The dissolved Fe results are presented in Table 5-34. The feedstock for the first destruction round contained 84,000,000 µg/L dissolved Fe while the feedstock for the second destruction round contained 74,000,000 µg/L. No dissolved Fe appears to be lost in the destruction process as evidenced in the effluent samples.

5.7.3.12 Dissolved Mn

Samples were analyzed for dissolved Mn from the parametric destruction tests performed after the first and second regeneration rounds. The dissolved Mn results are presented in Table 5.34. The feedstock for the first destruction round contained 420,000 µg/L dissolved Mn while the feedstock for the second destruction round contained 390,000 µg/L. No dissolved Mn appears to be lost in the destruction process as evidenced by the effluent samples.

Table 5-33. Title 22 Metals from Parametric Destruction Tests

Sample Name		Date Sampled	Total Al	Total Ag	Total As	Total Ba	Total Be	Total Cd	Total Cr	Total Cu	Total Hg	Total Ni	Total Pb	Total Se	Total Sb	Total Tl	Total Zn
			µg/L	µg/L	µg/L	µg/L	µg/L	µg/L	µg/L	µg/L	µg/L	µg/L	µg/L	µg/L	µg/L	µg/L	µg/L
First Destruction Round	Feedstock	10/15/2007	77000	50	360	210	< 20	6	49000	35000	3.5	18000	200	< 20	1200	< 10	3900
	10-12' Destruction Solution[a]	10/12/2007	78000	52	380	210	< 20	5	49000	36000	3.8	18000	200	< 20	1200	< 10	4200
Second Destruction Run	Reactor Feed (3/24/08)(13:00)	3/24/2008	66000	< 50	320	180	< 25	< 25	44000	31000	52	16000	180	< 100	1100	< 50	4000
	Reactor Out (160/20)[b]	3/19/2008	61000	< 80	570	200	< 40	< 40	38000	28000	40	15000	180	< 160	1000	< 80	5000
	Reactor Out(160/40)[b]	3/20/2008	67000	< 50	340	190	< 25	< 25	44000	32000	56	17000	170	< 100	1200	< 50	4200
	Reactor Out (170/40)[b]	3/20/2008	65000	< 50	340	180	< 25	< 25	43000	31000	54	16000	170	< 100	1200	< 50	4100
	Reactor Out(170/20)[b]	3/21/2008	72000	< 50	350	190	< 25	< 25	47000	33000	57	17000	180	< 100	1200	< 50	4300
	Reactor Out(180/40)[b]	3/24/2008	60000	< 50	310	170	< 25	< 25	40000	29000	47	15000	160	< 100	1000	< 50	3700
	Reactor Out(180/20)[b]	3/24/2008	70000	< 50	350	190	< 25	< 25	46000	33000	56	17000	190	< 100	1200	< 50	4400

[a] Reaction temperature of 190 °C, feedrate of 23 mL/minute
[b] Parenthetical notation is nominal temperature in °C/ nominal flow rate in mL/minute

Table 5-34. Accumulative Metals (As, Fe, Mn, and U) from Parametric Destruction Tests

Sample Name		Date Sampled	Total As	Dissolved Fe	Total Fe	Dissolved Mn	Total Mn	Dissolved U	Total U
			µg/L	µg/L	µg/L	µg/L	µg/L	µg/L	µg/L
First Destruction Round	Feedstock	10/15/2007	360	84000000	84000000	420000	420000	150	150
	10-12' Destruction Solution[a]	10/12/2007	380	82000000	81000000	400000	410000	150	160
Second Destruction Run	Reactor Feed (3/24/08)(13:00)	3/24/2008	320	74000000	72000000	390000	390000	85	85
	Reactor Out (160/20)[b]	3/19/2008	570	75000000	78000000	340000	330000	80	80
	Reactor Out(160/40)[b]	3/20/2008	340	74000000	77000000	370000	390000	82	88
	Reactor Out (170/40)[b]	3/20/2008	340	72000000	73000000	370000	380000	85	85
	Reactor Out(170/20)[b]	3/21/2008	350	76000000	79000000	390000	410000	88	95
	Reactor Out(180/40)[b]	3/24/2008	310	68000000	68000000	350000	350000	78	80
	Reactor Out(180/20)[b]	3/24/2008	350	75000000	77000000	400000	400000	90	92

[a] Reaction temperature of 190 °C, feedrate of 23 mL/minute
[b] Parenthetical notation is nominal temperature in °C/ nominal flow rate in mL/minute

5.7.3.13 Gross Alpha

Samples were analyzed for Gross Alpha from the parametric destruction tests performed after the second regeneration round. The Gross Alpha results are presented in Table 5.35. Gross Alpha of levels in feedstock and reactor effluent were quite variable: between 350 and 5300 pCi/L. The radiation levels appear to be quite high relative to uranium concentrations of 80-95 µg/L found in these samples; natural abundance would indicate 54-64 pCi/L from uranium from these samples. While the gross alpha measurements are quite high relative to drinking water standards, the radioactivity of the destruction reaction effluent does not appear to have compromised the wellhead drinking water.

Table 5-35. Gross Alpha from Destruction Unit Operations

	Sample Name	Date Sampled	Gross Alpha
			pCi/L
Second Destruction Run	Reactor Feed (3/24/08)(13:00)	3/24/2008	1600
	Reactor Out (160/20)[a]	3/19/2008	350
	Reactor Out(160/40)[a]	3/20/2008	5300
	Reactor Out (170/40)[a]	3/20/2008	1400
	Reactor Out(170/20)[a]	3/21/2008	2000
	Reactor Out(180/40)[a]	3/24/2008	2400
	Reactor Out(180/20)[a]	3/24/2008	3800

[a] Parenthetical notation is nominal temperature in °C/ nominal flow rate in mL/minute

5.7.3.14 Dissolved U

Samples were analyzed for dissolved U from the parametric destruction tests performed after the first and second regeneration rounds. The dissolved U results are presented in Table 5-34. The feedstock for the first destruction round contained 150 µg/L dissolved U while the feedstock for the second destruction round contained 85 µg/L. No dissolved U appears to be lost in the destruction process as evidenced by the effluent samples.

5.7.3.15 Total Fe

Samples were analyzed for total Fe from the parametric destruction tests performed after the first regeneration round and from both the production and parametric destruction tests in the second

regeneration round. Total Fe analysis performed by Calgon has been presented in Tables 5-28, 5-29, and 5-30. The average influent total Fe concentration for the parametric tests from the first destruction round was 81,000,000 µg/L, The total Fe concentration for the parametric tests from the second destruction round was 83,000,000 µg/L. No total Fe appears to be lost in the destruction process as evidenced by the effluent samples.

Additional total Fe samples were obtained from the independent analytical lab from the parametric destruction tests performed after the first and second regeneration rounds; these results are presented in Table 5-34. The total Fe results from the independent lab agree well with the total Fe results obtained from Calgon.

5.7.3.16 Total Mn

Samples were analyzed for total Mn from the parametric destruction tests performed after the first and second regeneration rounds. The total Mn results are presented in Table 5-34. The feedstock for the first destruction round contained 420,000 µg/L total Mn while the feedstock for the second destruction round contained 390,000 µg/L. No total Mn appears to be lost in the destruction process as shown by the effluent samples.

5.7.3.17 Total As

Samples were analyzed for total As from the parametric destruction tests performed after the first and second regeneration rounds. The total As results are presented in Table 5-34. The feedstock for the first destruction round contained 360 µg/L total As while the feedstock for the second destruction round contained 320 µg/L. No total As appears to be lost in the destruction process as evidenced by the effluent samples.

5.7.3.18 Total U

Samples were analyzed for total U from the parametric destruction tests performed after the first and second regeneration rounds. The total U results are presented in Table 5-34. The feedstock for the first destruction round contained 150 µg/L total U while the feedstock for the second destruction round contained 85 µg/L. No total U appears to be lost in the process as shown by the effluent samples.

5.7.3.19 VOCs

VOC sampling for the first and second destruction cycle was conducted only in the parametric tests. Influent and effluent was sampled for the first destruction cycle test performed 10/12/2007 representing 190 °C reaction temperature and a 23 mL/minute flow rate. In the second destruction cycle, a single sample was collected to represent influent for all parametric destruction runs and a single sample was also collected for each parametric condition. VOC results from the destruction cycles are summarized in Table 5-36. Influent for both destruction cycles contained modest amounts of VOCs, most notably chloromethane and 1,2-dichloroethane. Effluent from the destruction reactor contained significantly higher concentrations of some VOCs including chloromethane, 1,2-dichloroethane, and bromomethane. This suggests some

formation of targeted VOCs is occurring from other non-target organics is in the destruction reactor.

Table 5-36. VOCs from Parametric Destruction Tests

	Sample Name	Date Sampled	1,2,3-Trichlorobenzene	1,2,4-Trichlorobenzene	2-Butanone	Chloromethane	Methylene Chloride	Chloroform	Chloroethane	Carbon tetrachloride	1,2-Dichloroethane	Bromomethane	Bromodichloromethane	Dibromochloromethane	Bromoform	4-Methyl-2-pentanone	m,p-Xylene	o-Dichlorobenzene	Toluene
			µg/L	µg/L	µg/L	µg/L	µg/L	µg/L	µg/L	µg/L	µg/L	µg/L	µg/L	µg/L	µg/L	µg/L	µg/L	µg/L	µg/L
First Destruction Round	Feedstock	10/15/2007	**1.7**	**15**	< 5.0	**47**	< 0.50	**2.3**	< 0.50	< 0.50	**8**	**2.4**	< 0.50	**0.53**	**0.71**	**8.8**	< 1.0	**2.9**	< 0.50
	10-12' Destruction Solution[a]	10/12/2007	< 10	< 10	< 100	**3600**	< 10	< 10	< 10	< 10	**390**	**120**	< 10	< 10	< 10	< 100	**30**	< 10	< 10
Second Destruction Run	Reactor Feed (3/24/08)(13:00)	3/24/2008	< 10	< 10	< 100	**23**	< 10	< 10	< 10	< 10	**13**	< 10	< 10	< 10	< 10	< 100	< 20	< 10	< 10
	Reactor Out (160/20)[b]	3/19/2008	< 10	< 10	< 100	**1400**	< 10	< 10	< 10	< 10	**90**	**77**	< 10	< 10	< 10	< 100	< 20	< 10	< 10
	Reactor Out(160/40)[b]	3/20/2008	< 10	< 10	< 100	**1700**	< 10	< 10	< 10	< 10	**120**	**11**	< 10	< 10	< 10	< 100	< 20	< 10	< 10
	Reactor Out (170/40)[b]	3/20/2008	< 10	< 10	< 100	**1500**	< 10	< 10	< 10	< 10	**170**	**12**	< 10	< 10	< 10	< 100	< 20	< 10	< 10
	Reactor Out(170/20)[b]	3/21/2008	< 10	< 10	< 100	**1400**	**24**	< 10	< 10	< 10	**160**	**61**	< 10	< 10	< 10	< 100	< 20	< 10	< 10
	Reactor Out(180/40)[b]	3/24/2008	< 10	< 10	< 100	**1500**	< 10	< 10	< 10	< 10	**190**	**52**	< 10	< 10	< 10	< 100	< 20	< 10	< 10
	Reactor Out(180/20)[b]	3/24/2008	< 10	< 10	< 100	**1900**	< 10	< 10	< 10	< 10	**220**	**26**	< 10	< 10	< 10	< 100	< 20	< 10	< 10

[a] Reaction temperature of 190 °C, feedrate of 23 mL/minute
[b] Parenthetical notation is nominal temperature in °C/ nominal flow rate in mL/minute

5.7.3.20 SVOCs and N/P Pesticides

Samples were analyzed for SVOCs and Pesticides from the parametric destruction tests performed after the first and second regeneration rounds. The analytical results are summarized in Table 5-37. Few SVOCs were found. Benzyl alcohol was found in similar quantities from the feedstock and the destruction reactor effluent of the second destruction round. Bis(2-chloroethyl)ether was not found in the first destruction round or the feedstock to the second destruction round but was consistently found in the destruction reactor effluent of the second destruction round. This result is consistent with the formation of chlorinated VOCs in the destruction reactor. Other SVOCs were sporadically found. No pesticides were found in either the destruction reactor feedstock or effluent.

Table 5-37. SVOCs from Parametric Destruction Tests

Sample Name	Date Sampled	Organophosphorous Pesticides	Benzyl alcohol	Bis(2-chloroethyl)ether	Bis(2-ethylhexl)phthalate	Diethylphtalate
		µg/L	µg/L	µg/L	µg/L	µg/L
Feedstock	10/15/2007		< 5.0	< 5.0	< 5.0	< 5.0
10-12' Destruction Solution[a]	10/12/2007		< 5.0	< 5.0	**7.0**	**5.0**
Reactor Feed (3/24/08)(13:00)	3/24/2008	< 0.15	**75**	< 50	**100**	< 50
Reactor Out (160/20)[b]	3/19/2008	< 1.5	**55**	**100**	< 50	< 50
Reactor Out(160/40)[b]	3/20/2008	< 1.5	**140**	**140**	< 50	< 50
Reactor Out (170/40)[b]	3/20/2008	< 0.15	**61**	**84**	< 50	< 50
Reactor Out(170/20)[b]	3/21/2008	< 0.15	< 50	**210**	< 50	< 50
Reactor Out(180/40)[b]	3/24/2008	< 0.15	**130**	**70**	< 50	< 50
Reactor Out(180/20)[b]	3/24/2008	< 0.15	**95**	**95**	< 50	< 50

[a] Reaction temperature of 190 °C, feedrate of 23 mL/minute
[b] Parenthetical notation is nominal temperature in °C/ nominal flow rate in mL/minute

5.7.4 Simulated Distribution System (SDS) Sampling Results

Simulated distribution system tests are described in Section 5.3.1. These tests used water derived from the demonstration wellhead perchlorate treatment. The first series of tests was performed

with water treated with virgin resin from the first treatment round. The second series of tests was performed with water treated with regenerated resin from the third treatment round.

5.7.4.1 Free Chlorine

Free chlorine was measured at the termination of each SDS test to ensure chlorine residual was present; free chlorine results for these tests are summarized in Table 5-38. For the first series of tests, using water collected from wellhead treatment effluent on 09/26/2007, free chlorine from the chlorinated water averaged 1.34 mg/L. For the second series of tests, using water collected from wellhead treatment effluent on 7/31/2008, free chlorine from the chlorinated water remained above the analytical range of the test procedure; one sample was diluted resulting in 3.6 mg/L free chlorine. Since the purpose of the free chlorine test was to ensure residual chlorine in each treatment, no further free chlorine analysis was deemed necessary.

Table 5-38. Free Chlorine and Halogenated Compounds from SDS Study

Sample ID	Free Chlorine	Total Organic Halides	Haloacetic Acids						Trihalomethanes			
			Bromochloroacetic acid	Dibromoacetic acid	Dichloroacetic acid	Monobromoacetic acid	Monochloroacetic acid	Trichloroacetic acid	Bromodichloromethane	Bromoform	Chloroform	Dibromochloromethane
	mg/L	µg/L	µg/L	µg/L	µg/L	µg/L	µg/L	µg/L	µg/L	µg/L	µg/L	µg/L
09/26/2007 Water Test												
SDS-IX-24hr-1	1.39	< 20	< 1.0	< 1.0	< 1.0	< 1.0	< 2.0	< 1.0	< 0.50	< 0.50	< 0.50	< 0.50
SDS-IX-24hr-2		< 20	< 1.0	< 1.0	< 1.0	< 1.0	< 2.0	< 1.0	< 0.50	< 0.50	< 0.50	< 0.50
SDS-IX-7D-1	1.28	**26**	< 1.0	< 1.0	< 1.0	< 1.0	< 2.0	< 1.0	< 0.50	< 0.50	< 0.50	< 0.50
SDS-IX-7D-2	1.34	< 20	< 1.0	< 1.0	< 1.0	< 1.0	< 2.0	< 1.0	< 0.50	< 0.50	< 0.50	< 0.50
SDS-IX-7D-C		< 20	< 1.0	< 1.0	< 1.0	< 1.0	< 2.0	< 1.0	< 0.50	< 0.50	< 0.50	< 0.50
07/31/2008 Water Test												
SDS-IX-24hr-1	> 2.2	< 20	< 1.0	**1.4**	< 1.0	< 1.0	< 2.0	< 1.0	< 0.50	< 0.50	**1.3**	< 0.50
SDS-IX-24hr-2	> 2.2	**31**	< 1.0	< 1.0	< 1.0	< 1.0	< 2.0	< 1.0	< 0.50	< 0.50	**1.3**	< 0.50
SDS-IX-7D-1	3.6	**22**	< 1.0	< 1.0	< 1.0	< 1.0	< 2.0	< 1.0	**0.86**	< 0.50	**1.4**	< 0.50
SDS-IX-7D-2	> 2.2	**34**	< 1.0	< 1.0	< 1.0	< 1.0	< 2.0	< 1.0	**0.86**	< 0.50	**1.5**	< 0.50
SDS-IX-7D-C	< 0.01	< 20	< 1.0	< 1.0	< 1.0	< 1.0	< 2.0	< 1.0	< 0.50	< 0.50	**0.98**	< 0.50

5.7.4.2 Total Organic Halides

Total organic halides were measured the termination of each SDS test; results for these tests are summarized in Table 5-38. For the first series of tests, using water collected from wellhead treatment effluent on 09/26/2007, total organic halides ranged from < 20 to 26 µg/L; the control treatment contained < 20 µg/L. For the second series of tests, using water collected from wellhead treatment effluent on 7/31/2008, total organic halides ranged from < 20 to 34 µg/L; the control treatment contained < 20 µg/L. Thus formation of total organic halides was very limited.

5.7.4.3 Haloacetic Acids

Haloacetic acids were measured the termination of each SDS test; results for these tests are summarized in Table 5-38. Bromochloroacetic acid was tested for addition to the five acids included in the HAA-5 standard. One SDS test, 24 hour exposure of 07/31/2008 wellhead treatment effluent, contained dibromoacetic acid above the method reporting limit. We could not find a risk based comparison value for this compound. No other sample in the SDS study contained haloacetic acids above the reporting limits.

5.7.4.4 Trihalomethane

Trihalomethanes were measured the termination of each SDS test; results for these tests are summarized in Table 5-38. For the first series of tests, using water collected from wellhead treatment effluent on 09/26/2007, no trihalomethanes were detected above the method reporting limit. For the second series of tests, using water collected from wellhead treatment effluent on 7/31/2008, all tests contained chloroform and the seven-day exposure tests also contained measureable bromodichloromethane. Chloroform concentrations were higher for both 24-hour and seven-day exposure tests than in the control, which had no added chlorine.

5.7.4.5 NDMA, NDEA, and NDPA

Nitrosamines were measured the termination of each SDS test; results for these tests are summarized in Table 5-39. No nitrosamines were found above reporting limits for any of the SDS tests.

Table 5-39. Nitrosamines from SDS Study

Sample ID	N-Nitrosodimethylamine	N-Nitrosomethylethylamine	N-Nitrosodiethylamine	N-Nitrosodi-n-propylamine	N-Nitrosomorpholine	N-Nitrosopyrrolidine	N-Nitrosopiperidine	N-Nitrosodi-n-butylamine
	ng/L	ng/L	ng/L	ng/L	ng/L	ng/L	ng/L	ng/L
9/28/07 Test								
SDS-IX-24hr-1	< 2.0	< 2.0	< 2.0	< 2.0	< 2.0	< 2.0	< 2.0	< 4.0
SDS-IX-7D-1	< 2.0	< 2.0	< 2.0	< 2.0	< 2.0	< 2.0	< 2.0	< 2.0
SDS-IX-7D-2	< 2.0	< 2.0	< 2.0	< 2.0	< 2.0	< 2.0	< 2.0	< 2.0
SDS-IX-7D-C	< 2.2	< 2.2	< 2.2	< 2.2	< 2.2	< 2.2	< 2.2	< 2.2
8/21/2008 Test								
SDS-IX-24hr-1	< 2.0	< 2.0	< 2.0	< 2.0	< 2.0	< 2.0	< 2.0	**2.2 UB**
SDS-IX-24hr-2	< 2.0	< 2.0	< 2.0	< 2.0	< 2.0	< 2.0	< 2.0	< 2.0
SDS-IX-7D-1	< 2.0	< 2.0	< 2.0	< 2.0	**2.2 UB**	< 2.0	< 2.0	**2.8 UB**
SDS-IX-7D-2	< 2.0	< 2.0	< 2.0	< 2.0	< 2.0	< 2.0	< 2.0	**2.7 UB**
SDS-IX-7D-C	< 2.0	< 2.0	< 2.0	< 2.0	< 2.0	< 2.0	< 2.0	**2.6 UB**

UB – Non-detect due to blank contamination

6. PERFORMANCE ASSESSMENT

6.1 MEET CALIFORNIA DHS NOTIFICATION LEVEL FOR PERCHLORATE

California has set an MCL for perchlorate of 6 µg/L; the notification level in force prior to the adoption of the MCL was also 6 µg/L. As illustrated in Figure 5-10, effluent from the IX wellhead treatment was maintained below reporting limits (2.0 µg/L) for a considerable time period.

Two important terms for data analysis were defined in the demonstration plan before testing occurred:

- Breakthrough volume is typically defined at the maximum volume of influent that can be passed through the bed before effluent concentration equals 10% of the influent concentration or the California DHS Notification Level (6 µg/L), whichever is lower.

- Saturation is defined as the maximum volume of influent before effluent concentration equals 90% of influent concentration.

The saturation profiles or the four wellhead treatment cycles are summarized in Table 6-1. Since perchlorate was only sampled weekly, there is some uncertainty in quantifying the key points on the curve – breakthrough, exceedance of the MCL and saturation. Thus, each point is expressed as a range in Table 6-1. Since the influent concentrations were low, less than or equal to 11 µg/L, the pretest defined breakthrough concentration of 10% of influent concentration was below reporting limits. Detectable breakthrough is thus defined for this report as occurring between the first quantified detection of perchlorate in the effluent and the previous sampling event resulting in below reporting limit result.

Table 6-1 shows that perchlorate was reduced to less than 2.0 µg/L for a minimum of 97,000 BVs with virgin resin and a minimum of 82,000 BVs with regenerated resin during this demonstration. Similarly, effluent perchlorate concentrations were maintained below 6 µg/L for a minimum of 179,000 BVs with virgin resin, and a minimum of 147,000 BVs with regenerated resin. It is clear from this analysis that significant water volume can be treated with both virgin and regenerated resin to maintain effluent below 6 µg/L.

Table 6-1. Perchlorate Breakthrough at FWC Wellhead IX Treatment Unit

	Cycle 1	Cycle 2	Cycle 3	Cycle 4
Detectable Breakthrough; BVs	> 96,689	> 114,929	> 95,335	> 82,404
	< 109,950	< 131,148	< 117,487	< 98,773
MCL (6 µg/L); BVs	> 178,890	> 166,760	> 146,639	> 164,794
	< 193,212	< 177,050	< 167,816	< 181,208
Saturation; BVs	> 207,542	> 166,760	> 167,816	> 263,504
	< 219,846	< 177,050	< 179,959	< 284,584
Resin Volume, Gallons	115	112	107	107

This demonstration was designed and operated to achieve perchlorate saturation of the resin – to achieve the maximum efficiency in resin usage. As a result, a significant portion of the treated effluent contained perchlorate above the reporting limit and above the MCL. In a full-scale treatment application, a second bed would often follow the first bed to remove perchlorate after the first bed had reached breakthrough. Thus high effluent concentrations observed in this demonstration at the end of the saturation cycle are not indicative of unacceptable performance.

6.2 EFFICACY OF REGENERATED RESIN AS COMPARED TO VIRGIN RESIN

The efficacy of the regenerated resin to remove perchlorate was evaluated based on the volume treated before breakthrough and the mass of perchlorate removed prior to saturation. Analysis of these metrics for resin performance is somewhat confounded with the variability of the influent perchlorate concentration experienced during the demonstration site. Variability of perchlorate in the influent is reflected in variability in the effluent. The resulting effluent profile is not monotonic in the regions of interest and this suggests interpolating to establish a specific breakthrough or saturation point is not appropriate for this dataset. Thus for this analysis, the perchlorate sampling event immediately preceding demonstrated breakthrough or saturation will be used to establish these events.

As discussed above for this report, the first perchlorate concentration measured above the method's reporting limit is used to demonstrate breakthrough. As shown in Table 6-1, virgin resin breakthrough occurred after treating 97,000 BVs of site water. After the first regeneration, wellhead treatment during cycle 2 resulted in breakthrough after 115,000 BVs, 119% of the breakthrough volume demonstrated for the virgin resin. After the second regeneration, wellhead treatment during cycle 3 resulted in breakthrough after 95,000 BVs, 99% of the breakthrough volume demonstrated for the virgin resin. After the third regeneration, wellhead treatment during cycle 4 resulted in breakthrough after 82,000 BVs, 85% of the breakthrough volume demonstrated for the virgin resin. This analysis demonstrates that regenerated resin meets the performance objective of 80 to 120% of virgin resin breakthrough volume through 3 resin regeneration cycles. Furthermore, the discrete weekly sampling intervals inherent in a demonstration project likely overstate the variability in actual breakthrough volume. Inspection of Table 6-1 reveals that the range of treatment volumes in which breakthrough occurs with regenerated resins overlaps the range of treatment volumes in which breakthrough occurs with virgin resin. The predictability of performance shown in table 6-1 and in the breakthrough curves would be beneficial to operators using regenerated resin.

Saturation of the resin bed is defined in this demonstration when the effluent perchlorate concentration meets or exceeds 90% of the coincident influent perchlorate concentration. One influent sample in the fourth wellhead treatment cycle was below reporting limits for perchlorate (see Figure 5-9); this result was ignored for the purposes of determining saturation but was used in determining mass of perchlorate removed. As shown in table 6-1, saturation of the virgin resin occurred after treating 208,000 BVs. Saturation with regenerated resin occurred after treating between 167,000 and 264,000 BVs.

The mass of perchlorate removed during wellhead treatment was determined by integrating the difference between the influent and effluent curves. Integration was performed using a trapezoidal approximation; the difference between coincident influent and effluent sample concentrations was averaged for successive perchlorate sampling events and multiplied by the volume treated between these sampling events. For this mass removal calculation, a concentration of 0.0 µg/L is used for all perchlorate concentrations falling below the method's reporting limit of 2.0 µg/L. Resin mass loading through each wellhead treatment cycle is summarized in Table 6-2. Virgin resin removed 515 g of perchlorate before saturation. Regenerated resin achieved loading between 83 and 90% of virgin resin loading before saturation. This analysis demonstrates that regenerated resin meets the performance objective of 80 to 120% of virgin resin perchlorate loading before saturation through 3 resin regeneration cycles. Although the resin loading appears to improve between treatment cycles 2 and 4, this is largely an artifact of influent perchlorate concentration variability (see Figure 5-10) and the sample intervals used to determine saturation.

Table 6-2. Perchlorate Loading at FWC Wellhead IX Treatment Unit

	Cycle 1	Cycle 2	Cycle 3	Cycle 4
Loading before Breakthrough, g	364	359	308	201
Loading before Saturation, g	515	425	448	465
Final Loading, g	516	429	486	483
Resin Volume, Gallons	115	112	107	107
Normalized Final Loading, g/L	1.19	1.01	1.19	1.18

6.3 MEET CALIFORNIA DHS NOTIFICATION LEVELS OR MCLS FOR NITRATE, TITLE 22 METALS, AND NITROSAMINES

6.3.1 Nitrate

California has set an MCL for nitrate of 45 mg/L. The maximum nitrate concentration observed in the effluent was 40 mg/L. This objective was met with respect to nitrate; no exceedance of the nitrate MCL was observed for the effluent. The maximum nitrate concentration observed in the influent was also 40 mg/L. FWC manages the water production to maintain nitrate concentrations below the MCL. There is some evidence that the fresh resin removes a small amount of nitrate, as expected; the first effluent samples after installing both fresh and regenerated resin in the wellhead treatment system contained low levels of nitrate. During wellhead treatment, no significant difference was observed in the nitrate removal of fresh and regenerated resins. There is no evidence in our data set nitrate leaching from the regenerated resin. This could be due to sample timing, nitrate rollover has sometimes been observed in IX at other sites.

6.3.2 Title 22 Metals

California has set MCLs and SMCLs for a number of metals as summarized in Table 6-3. Copper and lead are regulated at the user's tap; these limits effectively regulate the corrosivity of the water delivered to the customer so as to prevent leaching from the customer's plumbing. While there is no action level for vanadium, a notification level of 50 µg/L has been established. As shown in Table 6-3, one effluent sample exceeded the MCL for aluminum and one effluent sample exceeded the MCL for selenium. Both exceedances occurred during the first round of wellhead treatment using virgin IX resin. Thus this objective was met with respect to metals; no metals exceedances were observed from regenerated resin.

6.3.3 Nitrosamines

California has set Notification Levels for the nitrosamines NDMA, NDEA, and NDPA at 10 ng/L. Effluent from the wellhead IX treatment exceeded this level for NDMA during the initial washout phase of the virgin IX resin. No NDMA effluent concentration exceeding 10 ng/L was observed after the first 40 BV. In commercial operation this is a known issue, and, the washout of NDMA is expected during backwash operation before the resin is placed in service. Backwash water is normally wasted, for example FWC maintains a pond for this purpose; alternatively, the resin is pre-rinsed prior to being delivered to the site and installed into the IX vessel One effluent sample during regeneration operation, taken February 27, 2008, contained NDMA at exactly the 10 ng/L Notification Level. This objective was met with respect to nitrosamines; no exceedances of the notification level were observed with regenerated resin.

Nitrosamine washout was investigated in detail after installing the virgin resin and after installing regenerated resin in treatment cycles 3 and 4. Washout of NDMA from virgin resin is shown in Figure 6-1; no similar washout was observed for NDEA or NDPA. During the third loading cycle, no NDMA was detected for the initial, 9, or 18 BVs effluent water samples; a small NDMA concentration, 2.3 ng/L was observed at 55 BVs effluent water sample. During the fourth loading cycle, no NDMA was detected in the initial, 8 or 32 BV effluent samples. There is no evidence that resin regeneration has caused any additional release or leaching of nitrosamines.

Although there is no evidence of a causual link in regenerated resin and increased nitrosamine concentrations, nitrosamines were detected in both the influent and the treated water effluent. Inspection of the influent nitrosamine results indicates that various nitrosamines are detected at seemingly random intervals during the wellhead treatment. NDMA, NMOR, and NDBA have been detected in the influent samples. The regeneration process does not appear to be associated with increased incidence or severity of nitrosamines in the wellhead treatment effluent.

Table 6-3. Summary of Effluent Title 22 Metals Samples at FWC Wellhead IX Treatment Unit

	Total Ag	Total Al	Total As	Total Ba	Total Be	Total Cd	Total Cr	Total Cu	Total Hg	Total Ni	Total Pb	Total Sb	Total Se	Total Tl	Total V	Total Zn
MCL; µg/L		1000	50	1000	4	5	50		2	100		6	50	2		
SMCL; µg/L	100	200						1000								5000
Action Level; µg/L								1300			15					
Influent MCL or SMCL Exceedances	0	0	0	0	0	0	0	0	0	0	0	0	1	0	0	0
Influent Samples	17	15	16	17	14	16	17	17	13	17	17	14	15	14	3	17
Effluent MCL or SMCL Exceedances	0	1	0	0	0	0	0	0	0	0	0	0	1	0	0	0
Effluent Samples	17	15	16	17	13	16	17	17	13	17	17	14	15	14	3	17

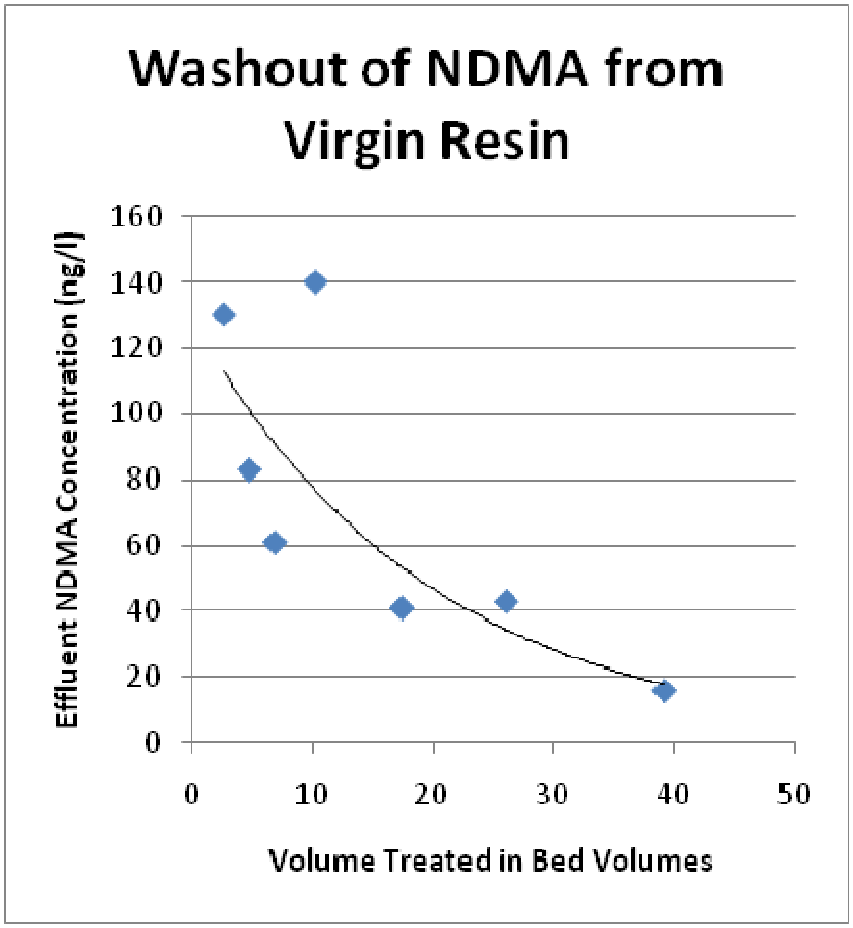

Figure 6-1: Washout of NDMA from Virgin IX Resin

6.4 PERCHLORATE DESTRUCTION

After the second regeneration cycle, a series of semi-continuous destruction runs at ~190 °C were performed to approximate commercial operation. Barrels 6 through 8 were selected for feed material representing high perchlorate samples from the second bed volume of tetrachloroferrate regenerant in the regeneration cycle. Tank E material was also used representing regenerant from the end (fifth and sixth bed volume) of the regeneration cycle. This source material was dosed with ferrous chloride and HCl and used as destruction reactor feed. The influent and effluent perchlorate concentrations for these runs were presented in Table 5-26. Perchlorate destruction efficiency was calculated as:

$$\text{Destruction Efficiency} = \left(1 - \frac{\text{Effluent Perchlorate Concentration}}{\text{Influent Perchlorate Concentration}}\right) \bullet 100$$

Perchlorate destruction efficiency ranged from 73.6% to > 99.7% in these runs with a median efficiency of > 99.2%. Only two of these destruction results produced < 95% perchlorate destruction. Both of these runs were characterized by high influent nitrate concentrations and high flow variability. The high flow variability was attributed to gas buildup in the reactor and subsequent episodic release of gas, creating inconsistent liquid residence time in the destruction reactor. Further, the effluent contained very low residual ferrous iron suggesting insufficient ferrous iron was present in both of these runs. Thus, it is clear that 95% perchlorate destruction can be maintained over a wide range of feed compositions although some management of nitrate concentration and ferrous iron stoichiometry is required.

Two different rounds of parametric destruction tests were also performed using regenerant from the first and second regeneration cycles. Perchlorate destruction efficiency results for these tests are shown in Table 6-4. Residence time in the reactor was calculated by dividing the volume of the tantalum coil, 3696 ml, by the average flow rate for each destruction run. For each cycle, > 95% perchlorate destruction efficiency was consistently obtained at reaction temperatures of 177-181 °C and higher with residence times greater than 1.4 hours.

Table 6-4. Summary of Perchlorate Destruction Efficiency in Both Sets of Parametric Tests

Reaction Temperature, C	Cycle 1 Parametric Destruction tests		Cycle 2 Parametric Destruction tests	
	Residence Time, hour	Destruction Efficiency	Residence Time, hour	Destruction Efficiency
161			2.9	71%
			1.5	53%
169-171	2.8	80%	3.1	95%
			1.5	79%
177-181	2.7	98%	3.1	> 99%
	1.4	95%	1.5	99%
	1.1	86%		
	1.0	84%		
188-190	2.7	> 99%		
	1.4	> 99%		
	1.1	> 99%		

6.5 ACCUMULATION OF URANIUM

Uranium (as uranyl carbonate anions such as $UO_2(CO_3)_2^{2-}$) is captured efficiently by even selective anion IX systems because of the structural similarity between the anionic forms of uranium and perchlorate. However, bi-functional resins are less sensitive than many other resins to uranium accumulation because they are designed to reject multi-charged anions such as sulfate and uranyl carbonates with relatively high hydration energy. (DTSC, 2004; Nyer, 2001; Gu et al., 2005.). Problematic accumulation of uranium over multiple cycles of resin use was assessed in this demonstration by comparing treated water quality to the 30 µg/L uranium MCL. Uranium

results, presented in Table 6-3, show that effluent from the wellhead treatment unit were well below 30 µg/L uranium; the maximum observed effluent uranium concentration was 2.7 µg/L through four treatment cycles.

Further inspection of Table 5-18 reveals that uranium is accumulated on the resin over a significant portion of the treatment volume. Effluent uranium concentrations approach influent uranium concentrations approximately coincident with initial perchlorate breakthrough. Uranium accumulation was managed in the demonstration through the perchlorate regeneration process. Acid associated with tetrachloroferrate regeneration is expected to result in the removal of sorbed uranium from the IX resin. In this demonstration, uranium was stripped from the resin prior to tetrachloroferrate regeneration with a dilute acid (HCl) rinse to avoid uranium buildup in the regenerant.

The Calgon Pittsburgh facility cannot receive materials containing uranium > 500 mg/L This restriction level derives from the complex regulatory framework for technologically enhanced naturally occurring radioactive materials (TENORM):

"TENORM is defined here as naturally occurring materials, such as rocks, minerals, soils, and water whose radionuclide concentrations or potential for exposure to humans or the environment is enhanced as a result of human activities (e.g., water treatment)…… source material is of an "unimportant quantity" (10 CFR 40.13) and is exempt from NRC regulation if the uranium or thorium makes up less than 0.05 percent by weight of the material. For natural uranium, this is approximately 335 pCi/g, although this figure is an estimate and actual values may be obtained for different uranium and thorium isotopes" (quoted from EPA 2005b, see also NRC 2006).

At sites where there is potential of exceeding 500mg/L uranium in the spent resin, alternate perchlorate-selective resins can be utilized that are less selective for uranium than the demonstration resin, Purolite A-530E. These resins can be regenerated using the same method used in the demonstration, and can be used to effectively manage the uranium concentration in the spent resin.

Uranium is effectively stripped from the resin during regenerations by both the dilute acid as shown in Figures 5-26 and 5-26a and the acidic tetrachloroferrate regenerant solution. The demonstration verified that uranium accumulation does not present a drinking water hazard. The demonstration was not designed to verify that uranium does not accumulate on the resin over multiple regeneration cycles but rather that it does not pose a drinking water hazard. There is no evidence in this demonstration of uranium accumulation over multiple regeneration cycles. The concentration of uranium on the resin is therefore believed to be controlled by the concentrations of uranium and competing anions in the drinking water and on the specific resin used. Accumulation of uranium greater than 0.05 percent by weight on these resins is possible in both single-use and IIX applications. With the off-site regeneration model, there will be no impact to the water treatment facility of uranium accumulation with IIX.

6.6 REDUCED TREATMENT COST

A very detailed cost model for this technology was produced to compare it with the baseline technology, single-use IX, and is presented in Section 7 for a 30-year operational period. For the particular application modeled the total NPC for the IIX technology was $16,450,387 and the total NPC for the single use IX was $18,644,389. Net present costs calculated using a real interest rate of 2.7%. Thus the IIX technology appears to be approximately 12% less expensive. Thus a cost savings was demonstrated but not one as large as the 25% goal stated in the demonstration plan.

6.7 SCALABILITY

The three parts of the IIX technology are at different stages of technology development. The perchlorate-selective resin element of the technology was already at full-scale before this demonstration. It is widely used in the market place at various flow rates and water qualities. Scaling is generally as simple as placing multiple vessel pairs in parallel.

The regeneration technology had been tested previously at very-small scale (less than 4 cm^3 of resin, Gu 2001) and at the 20 ft^3 pilot-scale for Edwards AFB (Gu et al., 2002a; Gu et al., 2003b). The Fontana regeneration was conducted at approximately the same pilot-scale (15-20 ft^3). Although bench-scale testing was not conducted for Fontana, a comparison of the bench- and pilot-scale work (including the results presented in Section 5 of this report) shows very good broad agreement in performance characteristics – percent recovery of perchlorate, number of cycles of resin reuse, and bed volumes required for perchlorate elution. This suggests that the regeneration technology is readily scalable.

The thermal perchlorate destruction process had been tested in a small batch system and both laboratory- and pilot-scale flow reactors at ORNL (0.1 mL/min up to ~1.5 GPH [0.1 mL/min up to ~0.14 m^3/day or 95 mls/min]). The pilot-scale flow-through reactor is shown in Figure 2-3, and is believed to be capable of running spent regenerant solution at ~37 gallons per day (GPD) (95 mls/min or 0.14 m^3/day). As discussed in Section 5.7.3 most of the testing in this demonstration was conducted between 20 and 60 mls/min. As shown in Section 6.14, the destruction rates for perchlorate achieved agreed very well with previous small-scale results. However, as discussed in Section 5.5.4 and 5.7.3, substantial operational difficulties were experienced with the perchlorate-destruction reactor. The authors believe that the destruction reactor would require substantial additional refinement for it to operate routinely in commercial service at this or larger scale.

6.8 INTEGRATION

All three unit processes were used together in this demonstration. Some issues were identified, that could perhaps be classified as related to integration of the technologies:

- Gas was generated during some perchlorate destruction operations, likely attributable to nitrate concentrations (see discussion in sections 5.5.4 and 6.4). Gas generation created liquid flow disruptions in the demonstrated reactor. These disruptions were

managed during the demonstration by blending regenerant fractions from a single regeneration event to control nitrate concentrations. Nitrate and perchlorate elute from the regeneration reactor very close to one another. Further research would be required to optimize the destruction reactor efficiency through regenerant inventory management or further separation of nitrate from perchlorate. Future scaled up reactor design should include provisions for purging gases generated in the destruction reactor; since gas generation is not likely to be completely eliminated through regenerant inventory management.

- Nitrosamines were found in significant concentrations in the tetrachloroferrate regeneration fluid and in rinses subsequent to tetrachloroferrate regeneration. Although nitrosamines were found in the regenerant solutions, there was no evidence that nitrosamines carried through with the resin to cause problems in the wellhead treatment.
- Halogenated VOCs appear to have been formed in the perchlorate destruction reactor. Destruction reactor effluent from both the first and second regeneration rounds contained significantly elevated concentrations of chloromethane, and to a lesser extent 1,2-dichloroethane, and bromomethane. Several halogenated VOCs were found in the wellhead effluent immediately after resin installation for the second wellhead treatment round after the first round of regeneration. Halogenated VOCs were similarly found in the final water rinse after the first round of regeneration immediately prior to installation of the resin for the second wellhead treatment round. Halogenated VOCs were not found in the wellhead effluent immediately after resin installation in the first wellhead treatment round or in the third or fourth wellhead treatment rounds. Thus the extent to which the formation of halogenated VOCs in the destruction reactor will be problematic for future applications of the IIX technology is somewhat unclear from this data set.
- Although several VOCs were generated during the perchlorate destruction process, this is clearly not the only source of VOCs, since they were present in tetrachloroferrate solutions that did not contain reactor destruction products. Furthermore, chloromethane was also present in the first cycle tetrachloroferrate effluent from the regeneration vessel. It is clear that the VOC can be effectively removed from the regenerated resin for field re-use, because VOCs were only an issue in the field after the first regeneration. It is unclear whether the VOCs are:
  - present below detection limits in the groundwater and concentrated on the resin during field treatment and then desorbed during regeneration,
  - entered the process as contaminants in the reagents used, or
  - created chemically during the ion-exchange or regeneration process.

The resin re-used for wellhead treatment of perchlorate was not negatively impacted by difficulties encountered during regeneration and destruction procedures in any way measured in this demonstration. The re-use of regenerant containing residual perchlorate and other contaminants did not have any measured adverse impact on the resin. The exclusion of the first two bed volumes of regenerant eluted during regeneration proved more than sufficient to

maintain acceptable regenerant quality. High temperature ferrous reduction of the perchlorate eluted during regeneration requires additional development to deal with operation disruptions and VOC generation. Incineration of highly contaminated regenerant as a perchlorate destruction mechanism is a market-ready option to commercialize regeneration and re-use of perchlorate selective resins. While ferrous reduction of perchlorate remains a long term option, incineration of regenerant is presumed to be the current commercialization path. We have assumed the contract mechanism for regeneration will include guarantees of perchlorate destruction with the exact destruction procedure left to the regeneration vendor. The price for regeneration, storage and re-installation of resin is assumed to be market driven and to include the cost of appropriate residuals disposal including perchlorate destruction.

6.9 TIME TO SATURATION

Since time to perchlorate saturation is directly proportional to BVs to perchlorate saturation for most facilities that operate at a relatively constant water treatment rate, please refer to Section 6.1 that discusses perchlorate breakthrough.

The objective of the demonstration plan also mentioned producing leaching curves for various contaminants. However as discussed in Section 6.3, there was little leaching of these contaminants so generation of leaching time estimates was not judged to be useful.

6.10 RINSE VOLUME REFINEMENT

One subsidiary goal of the project was to obtain information to refine the various wash and rinse steps within the overall regeneration process.

6.10.1 Dilute Acid Wash

The primary purpose of the dilute acid rinse is to condition the resin to receive tetrachloroferrate and avoid a high pH interface susceptible to iron precipitation. In addition, the dilute acid rinse elutes much of the uranium and sulfate preventing excessive buildup in the tetrachloroferrate solution; a small amount of perchlorate and nitrate were also eluted in the dilute acid rinse. With the exception of iron, the concentration of other metals in the dilute acid wash was very small. Inspection of the uranium elution curve, Figure 5-26 suggests the majority of eluted uranium is contained in the first 4 bed volumes.

6.10.2 DI Wash

The DI wash after the dilute acid wash was intended to return the resin to nearly neutral pH conditions to facilitate resin transfer to the regeneration vessel. The 10 BVs of DI planned for this step were eliminated by the third regeneration cycle in this demonstration by transferring the resin after the DI backwash and before the dilute acid rinse. This eliminated the personnel and equipment hazards that would have been associated with transferring resin in acid.

6.10.3 Dilute Acid Rinse

The dilute acid rinse after regeneration with tetrachloroferrate converts the iron in the regeneration vessel from tetrachloroferrate to ferric ions. The dilute acid also carries the iron from the regeneration vessel. The late spike in total iron during the second DI rinse and the nontoxic inorganic rinse suggest that additional acid rinse volume would be helpful in more to remove more iron. As discussed in Section 5.7.2.6.2 there was considerable variability between regeneration rounds in the elution of iron during this acid rinse and subsequent rinses. This suggests an opportunity for further optimization on scale-up although it should be noted that none of the regeneration rounds produced resin that evidenced any significant iron issues in subsequent drinking water treatment.

6.10.4 Water Rinses and Non-toxic Inorganic Rinses

The purpose of these rinses is to further reduce iron leaching and neutralize the regenerated resin so it will not significantly affect the pH of the treated drinking water. As discussed in sections 5.7.1.4 and 5.7.1.11 the effect of the regenerated resin on these parameters was minimal and acceptable. These rinses are significant enough in volume that their disposal could influence the economics of the regeneration process, unless a POTW disposal of these rinses can be permitted upon scale-up. Appropriate rinse water disposal is an underlying assumption of the costing of the regeneration scale-up.

6.11 RINSE WATER TREATMENT

The original plan for the demonstration anticipated on-site rinse water treatment. However the time frames required for the permitting of discharge to the POTW led to this process being outsourced in actual execution. Costs for rinse water treatment will be addressed in Section 7.

Wash waters and rinse waters generated during the regeneration process are likely to require neutralization prior to disposal. The alkali demand was estimated because all waste was not neutralized but disposed of as a corrosive. In addition, different alkalis were used throughout the demonstration. The alkali demand was estimated based on sodium hydroxide, as this is the likely reagent during full-scale regeneration.

A source of alkali demand is the acidity in the initial dilute acid wash, which is intended to remove uranium from the resin while leaving most of the perchlorate and nitrate behind for tetrachloroferrate regeneration. The dilute acid wash consisted of 10 BV of 0.1 M HCl. While some of the acid may be utilized to dissolve metals on the resin it does not affect the calculation of alkali demand during neutralization because the dissolved metals will consume alkali as they are neutralized and precipitated. The 10 BVs corresponded to different actual volumes because 150, 120, and 108 gallons per bed volume were assumed at the time the three regeneration cycles were performed. Our best final estimate of the regenerated resin volumes is 115, 112, and 107 gallons for the three regeneration cycles; respectively, some losses were incurred from spills and sampling. The amount of sodium hydroxide, as a solid, required to neutralize the acid from the wash water was thus estimated using stoichiometry by multiplying the acid volume by the acid molar concentration and the molecular weight of sodium hydroxide. Estimates for alkali demand

for the three regeneration cycles are presented in Table 6-5. Further optimization may reduce the dilute acid wash volume and the alkali required for neutralization.

Table 6-5. Alkali Demand for Rinse Neutralization

	Acid Wash		Acid Rinse			Total
Regeneration Cycle	Wash Volume Used 0.1M HCl, gallons	Wash NaOH (s) Demand, pounds	Residual NaOH Demand, pounds*	Remaining Rinse Volume 0.1 M HCl gallons	Remaining Rinse NaOH Demand, pounds	NaOH Demand, pounds
Cycle 1	1500	50	470	384	13	533
Cycle 2	1200	40	470	264	9	519
Cycle 3	1080	36	470	216	7	513

* During the period when the regenerant solution is displaced by the acid rinse

After tetrachloroferrate regeneration, the resin was rinsed with dilute acid to remove residual acid and iron from the resin. Initially the concentrated regenerant solution that is left with the resin when the rinses begin is displaced. Thus, the bulk of the residual iron and acidity is expected to elute during the first 2 BVs of the acid rinse as shown in Figure 5-29.The base demand for these first two BVs of acid rinse was estimated at 470 pounds sodium hydroxide. This estimate was based on 216 gallons effluent in 2 BVs, a composite analysis of 230 g/L chloride from the first 2 BVs collected in the third regeneration round, and a 1:1 stoichiometric molar ratio of chloride to sodium hydroxide demand. The acid in the remaining rinse volume, which was estimated as the difference between 4 BVs and 216 gallons, must also be neutralized. Alkali demand for the remaining rinse volume was estimated in the same manner as for the acid wash.

6.12 REGENERATION PROCESS EFFICIENCY

The vast majority of the perchlorate recovered from regenerating the IX resin elutes in the first 2 BVs of tetrachloroferrate regenerant solution. While 6 BVs of regenerant was used in this demonstration and was clearly sufficient, it is quite reasonable to reduce the tetrachloroferrate feed BVs in future scale-ups or production service.

A small amount of perchlorate was eluted during the dilute acid wash. Perchlorate recovery from the dilute acid wash was estimated using a trapezoidal integration of the perchlorate elution curve shown in Figure 5-11; the average concentration at the beginning and end of each sampling interval was multiplied by the dilute acid volume in the sampling interval this mass was then summed over all sampling intervals. The dilute acid rinse in cycles 1 through 3 eluted between 0.4 and 1.2 g of perchlorate. This is significantly less than 1% of the total loading of perchlorate onto the resin. The quantity of perchlorate removed during the dilute acid rinse is expected to decline further following the recommendation made above to reduce the dilute acid rinse to 4 BV as opposed to 10 BV as planned for this demonstration.

The regeneration process is designed to remove perchlorate with tetrachloroferrate in an acidic regenerant solution. The perchlorate eluted in the tetrachloroferrate regeneration step was calculated by multiplying analytical results from composite samples collected from the receiving container with the volume in the receiving container and adding the mass contained in each container. The perchlorate elution during the tetrachloroferrate regeneration steps are illustrated in Figure 6-2. The first 50 – 100 gallons effluent during the tetrachloroferrate regeneration step contained very little perchlorate, iron or acidity; this is consistent with the displacement of the water in the first and second regeneration or the displacement of dilute acid in the third regeneration by the acidic tetrachloroferrate solution. The perchlorate then elutes very rapidly over the next 50 to 100 gallons.

Recycled regenerant solution used in the third regeneration cycle contains significant perchlorate as a result of reusing the tetrachloroferrate from prior regeneration cycles. Perchlorate in the regenerant passes through the resin resulting in continued perchlorate elution after the resin is in equilibrium with the influent regenerant. The more rapid elution shown in Figure 6-2 for the third cycle as compared to the first two cycles strongly suggests that transferring resin to the regeneration vessel prior to the dilute acid backwash and elimination of the DI rinse results in a lower regenerant volume requirement in the third regeneration.

Based on the elution curve presented in Figure 5-5 and the cumulative elution shown in Figure 6-2, the tetrachloroferrate regeneration step has recovered the vast majority of the sorbed perchlorate within the first 300 gallons or regenerant. The volume of the resin bed was between 115 gallons for the first regeneration cycle and 108 gallons for the third regeneration cycle. The tetrachloroferrate regeneration step could conservatively be reduced to 3 BVs from the 6 BVs planned for this demonstration. A more aggressive 2 BV regeneration step appears feasible with the elimination of the DI wash between the dilute acid wash and the tetrachloroferrate regeneration as was demonstrated in the third regeneration round.

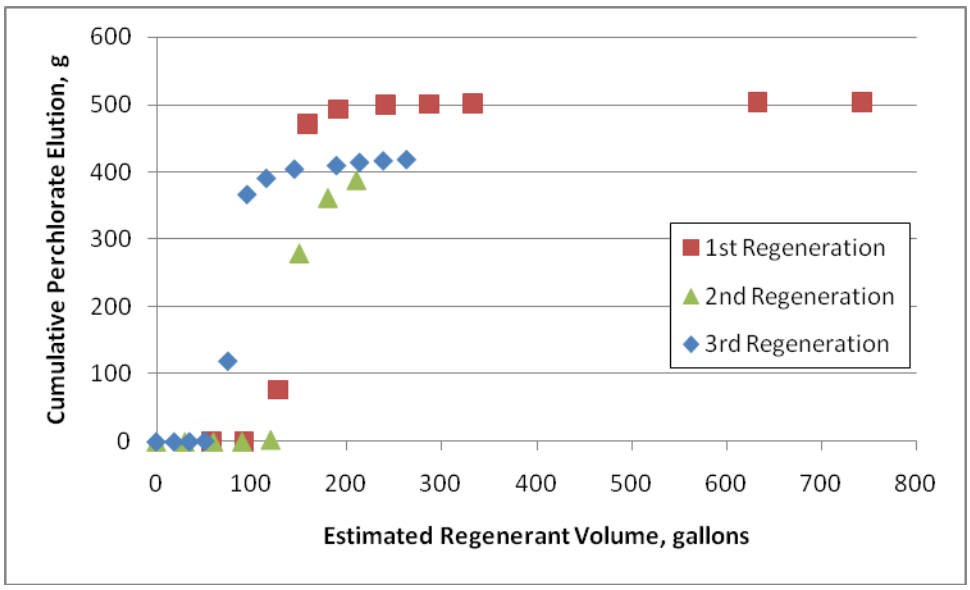

Figure 6-2. Perchlorate Mass Elution during Regeneration

6.13 PURGE RATE

Some level of tetrachloroferrate purge is required to maintain a constant inventory of tetrachloroferrate regenerant and/or to maintain contaminants at an acceptable level. The determination of an optimum purge rate in this demonstration is complicated by variable tetrachloroferrate inventory over the duration of the demonstration and iron carryover to the post regeneration acid rinse. Furthermore, the limited number of cycles demonstrated did not produce contaminants at a level that interfered with treatment, regeneration, or destruction processes.

The tetrachloroferrate technology as demonstrated utilizes liquid ferrous chloride to reduce perchlorate; at steady state, the addition of ferrous chloride solution would have to be balanced by a purge of fluid. In the second regeneration cycle, the tetrachloroferrate remaining in the resin after regeneration was recovered during the acid rinse, and was utilized in the third regeneration cycle.

6.14 OPTIMUM PERCHLORATE DESTRUCTION CONDITIONS

A series of parametric tests was performed with regeneration effluent from the first regeneration cycle and again for the second regeneration cycle. Perchlorate destruction efficiency was observed to improve with both increased residence time and increased temperature.

To the extent the destruction process costs are influenced by the cost of the reactor, smaller reactors and thus shorter residence times would be preferred. Both parametric test series were able to achieve 95% perchlorate destruction at ~180 °C with a residence time of 1.5 hours or less. In the first parametric series, > 99% perchlorate destruction was achieved at ~190 °C with a residence time as low as 1.1 hours. With a 95% reduction goal, even shorter residence times could be used.

A pseudo first-order reaction rate constant was determined for the parametric destruction runs with less than 95% destruction efficiency in order to compare with previously published destruction kinetics.

$$k = \frac{\ln[ClO_4^-(inlet)/ClO_4^-(outlet)]}{\text{Residence Time}}$$

As shown in Figure 6-3, the rate constants from the demonstration-scale tests compare favorably to the published rate constants (Gu et.al., 2003). The Gu 2003 paper included testing at two different ratios of iron to perchlorate, referred to here as “low Fe” and “high Fe”.Regression of the published Low Fe data results in an estimate of 1.1 hour residence time for 95% destruction at 190 C. A reactor designed for 1.1 hour residence time at 190 °C is recommended to achieve ≥ 95% perchlorate destruction. Thus, while no single clear optimum residence time or temperature was observed, the reaction was sufficiently predictable that a designer of a future scaled up perchlorate destruction system would easily be able to make the tradeoffs necessary between operating temperature, residence time and reactor size.

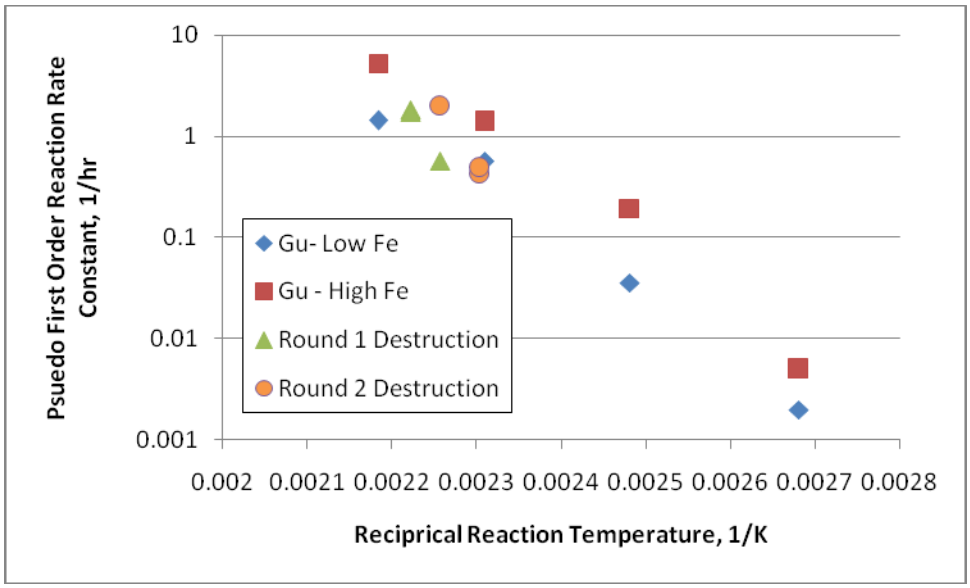

Figure 6-3: Perchlorate Destruction Reaction Rate Constant as a Function of Temperature

6.15 OPERATION & MAINTENANCE

Our IX operational experience is discussed in Section 5.5.2. Based on this experience the O&M characteristics of this system are expected to be the same as that of a single-use IX system (except for the handling of spent resin).

6.16 REGENERANT READJUSTMENT

In addition to the cost of the reactor, commercial regeneration operation would require consideration of both operations labor and reagents consumption. Ferrous iron is the primary reagent added in the regeneration process. Ferrous iron consumption drives not only the reagent cost, but also the amount of regenerant that will need to be purged to maintain a constant volume in inventory, assuming ferrous iron is added as a liquid as was done in this demonstration. Table 5-25 demonstrates that nitrate is also reduced in this system. In our demonstration high concentrations of nitrate were recovered from the resin along with the main perchlorate elution. Nitrate was partially reduced in the destruction reactor. Nitrite, an intermediate reduction product, appears to form at short residence times without appreciable further reduction at longer residence times despite the presence of significant ferrous iron. The production of gaseous nitrogen species such as N2 and NO was not monitored although gas emissions were observed. However, the sum of nitrate and nitrite appears to be largely conserved in the first round of parametric tests. This suggests that the gas generation occurred despite the very incomplete reduction of the available nitrate/nitrite. It follows that if perchlorate can be effectively reduced without nitrate reduction going all the way to nitrogen that less ferrous iron solution needs to be used in the future. If less ferrous iron solution was added, regenerant readjustment volume would also be reduced.

7. COST ASSESSMENT

7.1 COST MODEL

The cost model for IIX used in drinking water applications is built upon the design practices and experience of single-use IX installations. IIX technology is a drop in replacement for purchasing virgin perchlorate selective resin in a single-use IX application. There is no difference in the design and operation of the field portion of the technology with either single-use resin or IIX. Perchlorate saturated resin may be regenerated through a number of cycles using IIX and returned to service; no degradation of resin performance was detected in this demonstration. In both scenarios, saturated resin is removed from service and removed from the treatment site. In both scenarios the ready-to-use resin is brought to the treatment site to replace the saturated resin. The service life, breakthrough profile, and saturated capacity of regenerated resin are assumed to be identical to virgin resin in this model.

Some of the cost elements, required to build and operate resin bed perchlorate treatment as IIX, were tracked in this demonstration as summarized in Table 7-1. These costs were not used directly in building the cost model. Rather engineering judgment and recent resin and disposal costs were built into a cost model for a perchlorate treatment system at a notional site. Resin beds can be expected to be similar at different sites with the main difference being the number of trains designed to operate in parallel.

As discussed in Section 7.3, the primary cost differences between the current technology and IIX is the cost of changing resin in the treatment beds. Though regenerated resins will not require a purge to strip nitrosamines or impoundment of the discharge as typically required for virgin resin, these costs have been considered inconsequential within the scope of the model. Costs associated with regeneration and destruction specific to IIX accrue to the vendor and are covered by the market price of regeneration services. Costs built in the model reflect recent cost experience and vendor feedback and are not based on the costs incurred during the demonstration.

7.1.1 System Design

The design of the field system for a traditional single-use IX system or an IIX system is identical since the only difference between the two systems is what is done with the saturated resin, which is an operational difference not a design difference. The costs presented herein are for a “typical” perchlorate drinking water treatment system. We have assumed that our “typical” treatment system contains the following design basis elements:

- Design flow rate of 4,000 gallons per minute (gpm).
- IX vessels, resin and valve manifolds.
- Booster pump.
- Influent and effluent particulate filters.

- Site Survey.
- Geotechnical Investigation.
- Concrete equipment pad.
- Piping connection between an existing groundwater extraction pump and a drinking water distribution system.
- Electrical and instrumentation and controls design.
- Miscellaneous hardware and treatment system appurtenances.

Table 7-1: Cost Elements Tracked during IIX Demonstration. (15-gpm scale)

Cost Element	Data Tracked During Demonstration	Costs	
Wellhead System Design	Personnel/Labor	Sr/Project Engineer, 258 h	$33,381
	Reimbursables		$2,552
	Subcontracted Labor/Deliverables	Calgon	$8,620
Wellhead Installation	Equipment	IX Vessel with Resin	$8,620
	Personnel/Labor	Sr/Project Engineer, 142 h	$18,722
	Materials/Reimbursables		$642
	Subcontracted Services	Construction subcontractors	$103,687
Wellhead O&M	Personnel/Labor (O&M, Sampling, Data Management)	Staff Scientist to Sr Engineer, 1933 h	$177,562
	Materials/Reimbursables		$7,822
	Lab Analysis	Includes significant diagnostic analyses for demonstration	$101,103
	Other Subcontracted Services		$3,511
Regeneration of Resin	Regeneration (includes shipping, three rounds of regeneration/return)	Calgon	$67,076
	Personnel/Labor	Project/Sr Scientist, 338 h	$39,141
	Materials/Reimbursables		$3,864
Destruction/Waste Disposal	Destruction of perchlorate residuals (two rounds), disposal of wastewater residuals	Calgon	$36,432
	Design of Destruction Reactor	Included in Regeneration Cost	
	Personnel/Labor	Included in Regeneration Cost	

The IX treatment system will be designed to be installed in close proximity to an existing groundwater extraction pump. Once a site survey and geotechnical investigation has been conducted, a concrete equipment pad will be designed to accommodate the treatment system equipment. Piping will be designed to connect the existing groundwater pump discharge pipe to the treatment system influent manifold, interconnection to/from the influent and effluent manifolds and the IX vessels valve manifolds, and finally from the effluent manifold to the existing drinking water distribution system or reservoir. A treatment system bypass may also be included. The influent and effluent manifolds include the particulate filters. The booster pump will be located after the effluent particulate filter. Electrical power to the booster pump will be included, as well as instrumentation and controls. Miscellaneous structural supports (e.g., pipe supports, filter mounts, instrumentation mounts, etc.) will be designed. It is assumed that a potentially responsible party (PRP) will pay a contractor for the engineering design.

7.1.2 System Installation

The system installation costs assume that a PRP will pay a contractor to install the treatment system as designed. Installation costs include the following elements:

- Construction oversight.
- Project management.
- Construction services.
- Utility location.
- A treatment capacity of 4,000 gallons per minute (gpm) provided through two parallel IX vessel trains that are each comprised of two vessels configured in series with an interconnecting valve manifold (a total of four vessels in the system). Each vessel contains 424 cubic feet of resin. Vessels are 12-foot diameter carbon steel vessels. Includes first virgin resin fill.
- A booster pump equipped with a VFD to overcome the pressure loss imparted by the IX vessels. The booster pump is a 175 horsepower (HP) split-case horizontal pump designed for a flow rate of 4,000 gpm at a total dynamic head (TDH) of 115 feet.
- Influent and effluent particulate filters are included in the treatment system.
- Concrete pad to support IX vessels, interconnecting valve manifolds, pipe supports, influent and effluent particulate filters, and other ancillary equipment.
- Electrical control panel, booster pump disconnect and power supply. Costs assume that an electrical service exists with a motor control center (MCC) that has space to accommodate the 175 HP booster pump. Does not include provisions to install a new electrical service. Do not include SCADA.
- Minimum grading to install the concrete pad. Excludes significant grading.
- Capital items include sales tax at 9.5%.
- Costs include contractor markup of 10%.

7.1.3 On-Site Operations and Maintenance

On-site operations and maintenance (O&M) costing assumes that a PRP will reimburse a water purveyor for labor, utilities, contractors, routine maintenance, and laboratory analytical costs associated with the operation of the treatment system. Sales tax is included for capital purchases, but contractor markup is not included. O&M cost items are discussed in Section 7.3 – Cost Model.

7.1.4 Regeneration of Resin

Once the lead bed in a treatment train becomes saturated, the resin is either regenerated or, at the end of its useful life, incinerated or landfilled. In IIX, the resin is removed from service and is stored off-site pending regeneration with tetrachloroferrate as a contract service. The regeneration is a multi-step process resulting in the concentration of perchlorate from the resin in a small volume of tetrachloroferrate. Regenerated resin has been demonstrated to maintain perchlorate capacity similar to virgin resin through 3 regeneration cycles in this study and through at least 10 regeneration cycles in laboratory studies. Regenerated resin is returned to service as part of the regeneration contract when resin change-out is necessary.

The costs of regenerating the resin is expected to be market driven in response to the cost of virgin resin and resin destruction. The process costs incurred in this demonstration are not used to estimate cost of regeneration. The scale of full-scale operations and an economic learning curve are expected to obviate the demonstration costs and any cost sharing inherent in the demonstration contracted costs. As discussed in Section 7.3, model costs for regeneration are based on vendor feedback and scaled, for the purposes of this model, with volume of resin regenerated.

7.1.5 Destruction/Waste Disposal

The PRP is expected to require certification of perchlorate destruction as a part of the regeneration scope of services. In single-use IX this is typically provided through incineration of the saturated resin. In an IIX model, perchlorate saturated resin at the end of its service life will receive the same treatment. Resin that is regenerated, however, will generate a spent regenerant highly concentrated with perchlorate. The perchlorate, now in a liquid matrix, must be destroyed to satisfy the regeneration scope of services. Chemical reduction of the perchlorate with ferrous iron under high temperature conditions was demonstrated in this project. Destruction of the perchlorate through incineration is a viable market-ready technology at present. The vendor is assuming the responsibility to destroy the perchlorate in this market model in a package with regeneration services.

In addition to the perchlorate destruction, other residuals resulting from resin regeneration will be disposed of properly. These streams may include dilute acid rinses and other rinse waters that may contain other contaminants including metals, radionuclides, nitrosamines, and other

organics. Disposal for these residuals is also included in the market price obviating the need to scale disposal costs from demonstration costs.

7.2 COST DRIVERS

The cost of IX as a treatment technology for perchlorate depends on many factors including the treatment flow rate, concentration of perchlorate in the water, and the concentrations of competing ions, predominantly nitrate and sulfate, in the water. The perchlorate and competing ion concentrations are critical to the loading achievable on the resin, whether single-use or IIX, and thus the resin change-out schedule. The design of the resin beds and the resin volume in each bed are expected to be similar across sites due to similar mass transfer zones and an engineering optimization between the operating costs, driven by pressure drop across a bed, and the capital cost of the treatment system. The treatment flow rate will determine the size of the booster pump(s) and the number of treatment trains operating in parallel. These factors thus control the relative costs of the engineering, construction, operations, resin, etc. as parts of the total cost of water treatment. Regenerated resin will not require a significant purge to clear nitrosamines as is generally required for virgin resin; this cost impact is expected to be minimal. No other additional labor or safety concerns are expected for the end user relative to single-use resin.

The primary factor affecting cost to the end user for implementing a regenerable IX system will be the cost of resin regeneration and perchlorate destruction. Calgon, as the licensee of the regeneration and perchlorate destruction technology, will likely negotiate market prices for the regeneration and perchlorate destruction consistent with their business model and market forces. The two major competing market forces are expected to be the cost of virgin resin and the cost of disposing of the spent resin. The cost for performing the resin regeneration and subsequent perchlorate destruction and regeneration residual disposal must be considered by Calgon in developing pricing for this service. The fixed cost of the technology would include the costs of obtaining NSF certification, which is required when using a technology in a drinking water application; the cost of the regeneration and destruction facility; and the costs of storage facilities to hold the regenerated resin pending re-use. The variable costs will include the transportation of the resin to the regeneration and destruction facility, operations and maintenance labor, reagents, residuals destruction and disposal, and licensing fees.

- Transportation costs will depend on the trucking costs per mile and the location of the regeneration facility. The location of the regeneration facility will depend on the market development and penetration of this technology, and projections of the trucking costs and the costs to develop specific fixed facilities.
- Operations and Maintenance labor will be determined primarily on the complexity required to perform the regeneration and perchlorate destruction. These costs would be expected to decline with time along a learning curve and as the regeneration market expands for a single facility. One of the major factors affecting complexity will be the method employed to commercially dispose of the perchlorate. While this demonstration included thermo-chemical destruction of perchlorate and subsequent disposal of a bleed stream, commercial destruction through incineration of the few bed volumes of spent regenerant that contain the most perchlorate may prove more

cost effective pending further development of the thermo-chemical destruction process.

- Reagents for this process are principally ferric chloride ($FeCl_3$), hydrochloric acid (HCl) and ferrous chloride ($FeCl_2$). A small amount of base, likely sodium hydroxide (NaOH), will be required to neutralize certain regeneration residuals prior to disposal. The amount of reagent required will largely depend on the contaminant loading and the amount of disposal required to maintain regenerant and acid inventories.
- Destruction and disposal costs will be dependent on regenerant and rinse volume management within the regeneration cycle and the disposal method of the perchlorate and other residuals. The elution profile of the resin will be crucial in selecting the volume of regenerant to be set aside for destruction, incineration in this model. The residual acid and iron lost during the rinse steps will also influence residuals destruction and disposal costs. Flow management affecting these streams is expected to improve with scale and operational experience. As discussed with operations and maintenance costs above, the cost of disposal will also be influenced by the method chosen to commercially destroy or dispose of the recovered perchlorate (i.e., landfilling, incineration, etc.).
- The regeneration vendor would have costs attributable to the safe management of a low pH regeneration process. If the destruction technology demonstrated here was also used, rather then commercial incineration, the regeneration vendor would also incur costs attributable to the safe management of a high temperature, high pressure pressure.

7.3 COST MODEL

The dominant perchlorate treatment technology for drinking water applications is currently single-use IX. In the field, IIX utilizes the same equipment and the same perchlorate-selective resin as in single-use IX. In single-use applications, the perchlorate-saturated resin is removed from the site and landfilled or incinerated. In IIX, the resin will be shipped offsite for regeneration and will subsequently be returned to service at the same utility. For IIX, the resin is destroyed at the end of its service life. As modifications to the perchlorate treatment facility in the single-use model are not required, a facility may change from a single-use model to an IIX model, or back to a single-use model, at any point in the operations life-cycle. The costing approach used for comparison is consistent with a potentially responsible party (PRP) contracting for design, construction and resin change-out including virgin resin purchase, resin destruction, and resin regeneration with residuals destruction and disposal as applicable, and the PRP will reimburse the water purveyor to operate the perchlorate treatment system.

To provide a basis of comparison for single-use IX and IIX, the life cycle costs are estimated for each technology at a single generalized facility. The cost comparison is for the perchlorate treatment portion (single-use IX versus IIX) of the facility exclusively; the costs for other aspects of the facility and operations, such as chlorination, are not included in the cost comparison. The cost estimates are based on a generalized facility with two parallel perchlorate treatment trains treating a total of 4,000 gallons per minute. Each perchlorate treatment train consists of a lead bed and a lag bed, each bed containing 424 cubic feet of perchlorate selective IX resin. The

treatment system is equipped with a 175 HP booster pump that is equipped with a VFD to provide up to 50 PSI pressure to overcome the added pressure drop across the resin beds and piping.

When the lead bed of resin becomes saturated, the lead bed resin is removed and replaced with fresh resin, either virgin resin or regenerated. At this point valves are switched so that the lag bed becomes the lead bed and the bed with fresh resin (the former lead bed) becomes the lag bed. Operations are assumed to continue in this fashion for the life of the perchlorate treatment system, assumed to be 30 years operation in this estimate. The frequency of the resin change-outs will be determined primarily by the local water chemistry and the total volume of water treated. At low perchlorate concentrations, the saturation capacity of the resin is predominantly controlled by competing anion concentrations, mainly nitrate and sulfate. Based on saturation observed in a single resin bed at Fontana, 200,000 BVs are required to achieve saturation with either virgin or regenerated resin; this volume is applicable to saturation of the lead bed containing virgin resin at startup. After the initial perchlorate breakthrough in the lead bed at startup, all subsequent lag bed resins will be partially loaded while operating because of the perchlorate breakthrough or leakage from the lead bed. Based on ~100,000 BV breakthrough observed at Fontana, we estimate saturation occurs at 150,000 BV after initial startup. Actual resin change-outs will occur based on system perchlorate monitoring of the bed effluents. The treatment system is assumed to operate for 351 days per year with 14 days reserved for maintenance and other miscellaneous downtime. As a result, the system is expected to treat 2,022 MM gallons/year or 6,205 acre-feet/year.

After the treatment system is commissioned, the majority of operations are assumed to be turned over to water purveyor personnel. Non-routine operations and maintenance requirements of the perchlorate treatment system are assumed to be contracted.

- Operations Labor – Field operations and management labor are generally provided by the water utility with reimbursement from a PRP, which is assumed in this cost model. Labor is required for compliance and process sampling, quality assurance, reporting and other associated system management activities. These costs are estimated on a time and materials basis. .
- Laboratory – A sampling and analytical program is necessary for the perchlorate treatment system. Sampling and analytical requirements are assumed to be identical for both single-use IX and IIX. The analytical cost associated with certifying regenerated resin for re-use and for disposal of residuals is included in the regeneration and perchlorate destruction price. Laboratory costs are based on a periodic sampling program:
    - Annual: System influent and effluent cyanide, 1,2,3-trichloropropane/1,4-dioxane, ethylene 1,2-dibromomethane/1,2-dibromo-3-chloropropane, Fish Toxicity
    - Quarterly: System influent and effluent 200.8 metals, chrome VI, gross alpha, radon, uranium. System influent nitrosamines, volatile organic compounds (VOCs), semi-volatile organic compounds (SVOCs)

- Monthly – System influent and effluent perchlorate, common anions, nitrate, pH, total dissolved solids (TDS), total organic carbon (TOC), and fluorine. System effluent VOCs, SVOCs, and uranium. Bed effluent nitrosamines.
- Bi-weekly – Inter-bed perchlorate.
- Weekly – Bed effluent perchlorate.

- Maintenance – Non-routine maintenance is assumed to be subcontracted at 3% of system construction costs per year.
- Electricity – Estimated based on booster pump operation at 4,000 gpm pumping rate producing 50 PSI head. Pump is assumed to be 75% efficient and the drive is assumed to be 90% efficient. Electricity demand is estimated at 128.9 kW operating 24 hours a day for 351 days per year. Electricity is charged at $0.15/kW-h.
- ODC – Other direct costs include expenses from the contractor to cover travel expenses and certain office expenses such as communication and reproduction charges.

The costs for virgin resin depend on the volume, price, and resin change-out schedule. Both single-use and IIX will require virgin resin; the same resin is assumed for both single use and IIX cases. Single use resin will require virgin resin each change-out. IIX will require virgin resin as regenerated resin deteriorates because of irreversible fouling, chemical oxidation, physical degradation, etc. following multiple regeneration cycles; the resin is subsequently destroyed by incineration. Based on Fontana experience and the flow rate through each bed, change-out of the first bed is planned after 220 days of operation at full capacity. Subsequent change-outs are planned after 165 days of operation at full capacity. For single use resin, this schedule results in 63 change-outs and virgin resin purchases over 30 years of operation for each treatment train—a total of 126 change-outs. For IIX, the same 63 change-outs are planned, however, an eight regeneration cycle service life is assumed resulting in the purchase of seven additional beds of resin over 30 years of operation for each treatment train—a total of 14 virgin resin change-outs. The cost of each bed of resin is estimated based on 424 ft^3per bed and a resin purchase price of $225/$ft^3$ (excluding disposal charges). In addition, purchased resin is assumed to be subject to sales tax applicable for the facilities location. Sales tax on purchased items (not services) is assumed to be 9.5% in this cost estimate consistent with the tax rate in Fontana. With the sales tax included, the resin purchase price is estimated at $246/$ft^3$ as shown in Table 7-2.

The costs for regeneration service will also depend on the volume, price, and resin change-out schedule. 63 resin change-outs are planned over 30 years for each treatment train. With IIX, seven of these change-outs are planned with virgin resin and the remaining 56 are planned with regeneration service. As with virgin resin purchases, each regeneration service is estimated based on 424 ft^3per bed. The cost of regeneration service is expected to be market based to compete with virgin resin purchases; a price of $198/$ft^3$ has been assumed for this costing based on vendor (Calgon) input. The pricing assumes the vendor will hold spent resin pending regeneration and bill for regenerated resin when delivered as required for change-out; the vendor anticipates a similar delivery time for regenerated resin as for virgin resin. Pricing is also

assumed inclusive of residuals disposal and resin certification testing required to demonstrate the suitability of regenerated resin for drinking water treatment service. Regeneration service is assumed to be exempt from sales tax.

The perchlorate destruction costs are based on incineration. Perchlorate exchanged to the resin is incinerated and is therefore destroyed. Perchlorate recovered from the resin during IIX regeneration is destroyed separately within the scope of the regeneration service; while perchlorate destruction may proceed through reduction with ferrous iron as demonstrated, commercial incineration of perchlorate residuals is expected to be market ready and is expected to dominate early implementation of the technology until ferrous destruction becomes more cost-effective. Each bed of resin purchased during the planned 30 years of system operation is assumed to be incinerated. In addition, at the end of 30 years of operation the remaining two beds of resin in each treatment train, corresponding to the original resin charge, are assumed to be incinerated. Incineration costs are based on 424 ft^3 per bed and a tipping fee of \$20/ft^3.

The model costs for the perchlorate treatment system are summarized in Table 7.2. These costs assume a one-year construction timeframe followed by 30 years of operation. After 30 years of operation, the facility is assumed to be scrapped at no net cost except the cost of incinerating the remaining resin. Net Present costs are calculated using a real interest rate of 2.7%. From the preceding discussion, it is clear that IIX will result in cost savings to the extent that the market price for each regeneration service is less than the cost of purchasing virgin resin and incinerating the saturated resin. Over the 30 year operations life of the treatment system, single-use IX is modeled to cost \$100.16 per acre-ft compared to \$88.37 per acre-ft IIX. IIX is modeled to save \$2,194,002 in net present costs over a 30 year life cycle for the model facility.

Table 7-2: Perchlorate Treatment System Life-Cycle Costs

		IIX NPC	Single Use Resin NPC
Wellhead Treatment Design	Engineering Site Survey Geotechnical Investigation ODC Subtotal	$53,270 $4,400 $5,400 $880 $64,050	$53,270 $4,400 $5,400 $880 $64,050
Wellhead Treatment Construction & Commissioning	Engineering and Labor Mechanical Contractor Electrical Contractor Utility Clearance IX vessels & Initial Fill Booster Pump ODC Subtotal	$64,180 $330,000 $27,500 $1,100 $1,296,900 $211,200 $12,117 $1,942,997	$64,180 $330,000 $27,500 $1,100 $1,296,900 $211,200 $12,117 $1,942,997
Wellhead Treatment Operations & Maintenance	Ops Labor $72,260/yr Laboratory $36,000/yr Maintenance $58,000/yr Electricity $170,400/yr ODC $4,160/yr Subtotal $340,820/yr	$6,967,272	$6,967,272
Virgin Resin	$246/ft3	$992,140	$8,929,262
Regeneration	$198/ft3	$6,388,415	
Incineration	$20/ft3	$95,513	$740,808
Total NPC		**$16,450,387**	**$18,644,389**

8. IMPLEMENTATION ISSUES

8.1 APPLICABLE REGULATIONS

- In general systems for the treatment of drinking water are governed by the safe drinking water act and their residuals by the clean water act. State agencies typically apply both the federal standards and state specific regulations to drinking water providers. In CA the cognizent regulatory agencies are the Department of Public Health (DPH), Regional Water Quality Control Board (RWQCB) and DTSC. These agencies in turn generally require materials or processes used for drinking water treatment be certified by NSF http://www.nsf.org/. A-530E bi-functional, perchlorate–selective IX resin is a commercially available, NSF-61 certified, resin. It is approved for use in drinking water treatment systems without regeneration. Calgon is pursuing certification for the drinking water applications of the regeneration system tested here.
- Residuals disposal is regulated under RCRA both at the treatment facility and the regeneration facility. Should the destruction technology be implemented at full-scale, clean air act requirements would also need to be considered. Since naturally occurring radionuclides can be accumulated on anion exchange resins the requirements for technologically enhanced naturally occurring radioactive materials need to be considered (http://www.epa.gov/nrmrl/wswrd/dw/smallsystems/residuals.html). Additional permit and regulatory requirements that may apply in some jurisdictions include zoning and building permits for system installation.

8.2 END USER CONCERNS AND DECISION MAKING FACTORS

The main end-user issues for this technology are cost, reliability, and availability. One-pass IX has already been shown in numerous drinking water treatment applications to be a reliable, readily available, and cost-effective perchlorate treatment technology. This demonstration is an extension of this currently-available, widely-applied technology. The main purpose of this demonstration was to show that this technology can effectively regenerate perchlorate-loaded IX resin, destroy perchlorate, reduce waste streams, and thereby further reduce perchlorate treatment costs. A major benefit of this technology is that it can be added to existing perchlorate treatment systems without adding on site infrastructure. Since this technology has been shown to be effective in regenerating spent IX resin, destroying perchlorate, and reducing waste volume, this technology would be expected to be readily marketable end users and implement at existing or planned treatment facilities.

As shown in Section 7 this technology appears to have a small cost advantage on a percent basis over the existing technology which can lead to substantial savings since the overall cost of perchlorate treatment remains high, despite recent decreases in resin price. A portion of that cost advantage however is due to the fact that services are not subject to sales tax in many jurisdictions while materials such as one use resin are taxed. The demonstration site, Fontana Water Company, is an investor owned utility. Water treatment for perchlorate more generally would be expected to be conducted by a mix of investor owned, government owned and other

private utilities (information about the mix of these in the market place can be found at http://www.iatp.org/iatp/publications.cfm?refid=99838 and http://www.pacinst.org/publications/essays_and_opinion/public_or_private_editorial.pdf). Similarly water treatment in DoD is provided by a mix of privatized contractors and government providers. In many states local governments can be reimbursed for any sales taxes on their purchases.

- Commercialization of this technology would likely benefit from a regional-based regeneration facility constructed somewhere in the Southwest United States. This would be beneficial to reduce resin transportation costs. At the time of writing, no such facility is currently being engineered. To fully implement this technology, the regeneration vessel and perchlorate destruction reactor will need to be scaled-up to such a system. The front-end components of this technology—IX vessels, and resin—are already commercially available at full-scale. The regneration service is already being provided by Calgon on a commercial basis to nondrinking water perchlorate treatment applications. The destruction technology, if utilized would require scale-up. The back-end components of this technology—regeneration vessel and perchlorate destruction reactor—are patented technologies that the end user would not be required to purchase (i.e., there would be a vendor-provided resin regeneration service).
- Nitrosamines were found in significant quantities in the tetrachloroferrate regeneration fluid and in rinses subsequent to tetrachloroferrate regeneration. Nitrosamines were also detected in the wellhead feed water. It is not clear whether the nitrosamines were recovered from wellhead feed water, leached from existing reservoirs in the resin, or generated in the regeneration process. Nitrosamines would be expected to build up in the tetrachloroferrate regenerant, a process observed in the demonstration, limited by destruction in the perchlorate reduction reactor and purge associated with maintaining a fluid balance and with contaminant control. Although nitrosamines were found in the regenerant solutions, there is no evidence that nitrosamines carried through with the resin to cause problems in the wellhead treatment.
- Several halogenated VOCs were found in the wellhead effluent immediately after resin installation for the second wellhead treatment round, after the first round of regeneration. Halogenated VOCs were similarly found in the final water rinse after the first round of regeneration, immediately prior to installation of the resin for the second wellhead treatment round. Halogenated VOCs were not found in the wellhead effluent immediately after resin installation in the first wellhead treatment or in the third or fourth wellhead treatment rounds. It appears these halogenated VOCs in the second wellhead round effluent were a direct result of the regeneration and not a result of VOCs in the virgin resin nor from the influent water. Halogenated VOCs in the final water rinse after the second and third round of regeneration diminished successively from that in the first round of regeneration. This sequence strongly suggests the halogenated VOCs were the result of contamination of either the regeneration reagents or the regeneration equipment (PVC construction) which was successively washed and/or stripped from the system. This source of halogenated

VOCs is not likely to be important in large scale implementations provided the purge rate of tetrachloroferrate regenerant is small.

- Halogenated VOCs appear to have been formed in the perchlorate destruction reactor. Destruction reactor effluent from both the first and second regeneration rounds contained significantly elevated chloromethane, and to a lesser extent 1,2-dichloroethane, and bromomethane. Halogenated VOC production does not appear to be influenced significantly by the variation in reaction temperature or residence time studied during the parametric destruction tests. Buildup of these VOCs will be controlled to some extent by the purge rate of tetrachloroferrate regenerant and the fraction of regenerant processed in the destruction reactor.
- The regenerable IX technology can also be considered a "green technology" that provides some environmental benefits when compared to conventional technologies. Although a complete life cycle assessment of the two technologies was outside the scope of this work. Single use resins have become the norm for perchlorate removal applications. These resins once loaded with perchlorate are then disposed generally by incineration, although single use resins are engineered to be capable of regeneration. The regeneration process discussed here is expected to have a smaller carbon footprint then the single use process. Resins are essentially made from oil (peterochemicals). Calgon estimates that the carbon footprint for the regnerable process is 12.5% that of single use resins (Drewry, 2009).

8.3 PROCUREMENT ISSUES

The perchlorate selective IX resin technology developed by Oak Ridge National Laboratory (Oak Ridge name D-3696) is used in resins sold by multiple vendors including Purolite and Thermax-USA. This regeneration process is also applicable to any nitrate-selective resins used for perchlorate treatment and most perchlorate-selective resins (except Amberlite PWA-2). Tests reported by Gu (2001) included both the A-530E/D-3696 bi-functional resin and the Purolite A-520E mono-functional anion exchange resin that has triethylammonium exchange sites. Tests have also been conducted on Purolite A-500 (Gu, 2006a). Based on theory, this regeneration technology should be applicable to a wide range of resins manufactured by several companies.

The regeneration and destruction processes manufactured here are currently only being commercialized by only one source – Calgon. The US federal government can however practice the technology without paying a license fee. Calgon is marketing this technology under the trade name CRS (Custom Resin Regeneration Service). Government entities wishing to use the technology thus may wish to use a sole-source justification process, or to structure their requests for proposal (RFP)_ broadly enough to allow the IIX process to be bid as well as single use IX. As shown in Section 7 the RFP could be for either of the following:

- Turnkey water treatment services
- Supply of ready to use resin plus disposal of used resin

9. REFERENCES

Batista, J.R., F.X. McGarvey and A.R. Vieira. 2000. *The removal of perchlorate from waters using ion exchange resins*. In Perchlorate in the Environment. E.T. Urbansky. New York, Kluwer/Plenum**.** 135-145.

Bonnesen, P.V., G.M. Brown , S.D. Alexandratos, L.B. Bavoux, D.J. Presley, R. Ober, and B.A. Moyer. 2000. *Development of bifunctional anion exchange resins with improved selectivity and sorptive kinetics for pertechnetate. 1. Batch-equilibrium experiments. Environ. Sci. Technol.*, **34**. 3761-3766.

Boodoo, F. 2003. *POU/POE Removal of Perchlorate*, Water Conditioning and Purification. August 2003.

Brown, G.M., P.V. Bonnesen et al. 2000. Ch. 15. *The design of selective resins for the removal of pertechnetate and perchlorate from groundwater*. Perchlorate in the Environment. E.T. Urbansky. New York, Kluwer/Plenum**.** 155-164.

Department of Toxic Substances Control (DTSC), *Perchlorate Contamination Treatment Alternatives*, California Environmental Protection Agency. Jan 2004.

Drewry, C. 2009. Calgon Carbon Corporation, Personal email communication to Chris Lutes, ARCADIS. September 3, 2009.

Fontana Water Company, Annual Water Quality Report, 2004, at http://www.fontanawater.com/awqrfw04.pdf

Gu, B. et al. 1999. Selective Anion Exchange Resins for the Removal of Perchlorate ClO4- from Groundwater. Oak Ridge National Laboratories report ORNL/TM-13753, Feb 1999.

Gu, B., G.M. Brown et al. 2000a. Chapter 16. Efficient treatment of perchlorate (ClO_4^-)-contaminated groundwater by bi-functional anion exchange resins. In Perchlorate in the Environment. E.T. Urbansky. New York, Kluwer/Plenum**.** 165-176.

Gu, B., G.M. Brown et al. 2000b. "Development of novel bi-functional anion-exchange resins with improved selectivity for pertechnetate sorption from contaminated groundwater." *Environ. Sci. Technol.*, **34**.1075-1080.

Gu, B., G.M. Brown et al. 2001. Regeneration of perchlorate (ClO_4^-)-loaded anion exchange resins by novel tetrachloroferrate ($FeCl_4^-$) displacement technique. *Environ. Sci. Technol.*, **35**: 3363-3368.

Gu, B., Y. Ku et al. 2002a. Treatment of perchlorate-contaminated water using highly-selective, regenerable ion-exchange technology: a pilot-scale demonstration. *Remediation*, 12 (2): 51-68.

Gu, B., D. Cole et al. 2002b. Destruction of perchlorate in ferric chloride and hydrochloric acid

solution with control of temperature, pressure, and chemical reagents. US Patent Application No. 10/157,407.

Gu, B., W. Dong et al. 2003a. Complete degradation of perchlorate in ferric chloride and hydrochloric acid under controlled temperature and pressure. *Environ. Sci. Technol.*, **37**: 2291-2295.

Gu, B. et al. 2003b. *Treatment of Perchlorate-Contaminated Groundwater Using Highly-Selective, Regenerable Anion-Exchange Resins at Edwards Air Force Base;* Oak Ridge National Laboratory, May 2003b.

Gu, B., Y.K. Ku and P.M. Jardine. 2004a. Sorption and Binary Exchange of Nitrate Sulfate and Uranium on an Anion-Exchange Resin. *Environ. Sci. Technol.* 38:3184-3188.

Gu, B. et al. 2004b. Selective Ion Exchange for Perchlorate Removal, Recovery/Detection and Environmental Forensics. Presentation given at the East Valley Water District Water Conference, October 27-29, 2004b, Ontario, California.

Gu, B., Y. Ku and G. Brown. 2005. Sorption and Desorption of Perchlorate and U(VI) by Strong-base Anion exchange resins. *Environ. Sci. Technol.* 39, 901-907.

Gu, B. 2006a. *Personal communication with* Chris Lutes, January 2006a.

Gu, B. and J.D. Coates. 2006b. *Perchlorate Environmental Occurrence, Interactions, and Treatment.* Springer, New York.

Hem, J.D. 1992. Study and Interpretation of the Chemical Characteristics of Natural Water. 3rd Edition, USGS Water Supply Paper 2254. 1992.

ITRC (Interstate Technology & Regulatory Council). 2008. Remediation Technologies for Perchlorate Contamination in Water and Soil. PERC-2. Washington, D.C.: Interstate Technology & Regulatory Council, Perchlorate Team. www.itrcweb.org.

Mecula, City of. 2003. at http://www.cityoftemecula.org/cityhall/EconomicDev/HusingReport2003/inland.htm.

Mitch, W.A., J.O. Sharp, J.R. Trussell, R.L. Valentine, L. Alvarez-Cohen, and D. Sedlak. 2003. *N*-Nitrosodimethylamine (NDMA) as a drinking water contaminant: A review, *Environmental Engineering Science*, 20(5), 2003.

Najm, I. and R.R. Rhodes. 2000. NDMA Formation in Water & Wastewater. Presented at the AWWA Water Quality Technology Conference in Salt Lake City in November, 2000. Manuscript published in conference proceedings at http://www.mwhglobal.com/pdf/NDMA_formation.pdf.

National Academy of Sciences. 2005. *Health Implications of Perchlorate Ingestion*, Committee to Assess the Health Implications of Perchlorate Ingestion, Board of Environmental

Studies and Toxicology, Division of Earth and Life Studies, National Research Council of the National Academies, The National Academies Press, Washington, D.C., 2005.

Nikkah, K. Dynamic Modeling for Design of Ion Exchange Systems, Minerals Metals and Materials Society, undated, at http://technology.infomine.com/hydrometmine/papers/K.Nikkhah-dynamicmodeling.pdf.

NRC (Nuclear Regulatory Commission) 2006. NRC Regulatory Issue Summary 2006-20 : Guidance For Receiving Enforcement Discretion When Concentrating Uranium At Community Water Systems. September 14, 2006.

Nyer, E.K. et al. 2001. Continuing Problems in Groundwater- MTBE, 1,4-dioxane, Perchlorate and NDMA. In *In-situ Treatment Technology, 2nd Edition;* Lewis Publishers, 2001; Chapter 12.

Smith, David. 2003. Evolution of Ion Exchange Based Perchlorate Treatment Solutions. Presented at the NGWRC Conference, 2003.

Tripp, A.R. and D.A. Clifford. 2000. The treatability of perchlorate in groundwater using ion exchange technology. In Perchlorate in the Environment, E.T. Urbansky, ed. New York, Kluwer/ Plenum**:** 123-134.

Urbansky, E.T. 1998. "Perchlorate chemistry: Implications for analysis and remediation." *Bioremed. J.* **2**(2): 81-95.

U.S. Department of Defense. 2008. Defense Environmental Network Information Exchange web site listing current environmental protection agency state perchlorate regulatory actions. At: https://www.denix.osd.mil/portal/page/portal/denix/environment/MERIT/EC/ECAL/Perchlorate/StatesReg

USEPA, 2005. Perchlorate Treatment Technology Update; Federal Facilities Forum Issues Paper. EPA-542-R-05-015. At http://www.epa.gov/tio/download/remed/542-r-05-015.pdf.

USEPA, 2005b: "A Regulators' Guide to the Management of Radioactive Residuals from Drinking Water Treatment Technologies" EPA 816-R-05-004.

USEPA, 2009. Interim Drinking Water Health Advisory for Perchlorate. Prepared by Health and Ecological Criteria Division, Office of Science and Technology, Office of Water. EPA 822-R-08-025, December 2008. At http://www.epa.gov/safewater/contaminants/unregulated/pdfs/healthadvisory_perchlorate_interim.pdf.

Weber, W.J. and J.C. Crittenden 1975. "MADAM I – A Numerical Method for Design of Adsorption Systems" *J. Water Poll. Control Fed.*, 47, 5, 924.

Weber, W.J., and J.O. Thaler. 1983. "Modeling for Process Scale-Up of Adsorption and Ion Exchange Systems " In Scale-Up of Water and Wastewater Treatment Processes, N.W. Schmidtke and D.W. Smith eds., Butterworth, Boston. p 233-257.

APPENDICES

Appendix A: Points of Contact

POINT OF CONTACT Name	ORGANIZATION Name Address	Phone Fax E-mail	Role in Project
Andrea Leeson, Ph.D.	SERDP/ESTCP Environmental Restoration Program Manager 901 N. Stuart Street, Suite 303 Arlington, Virginia 22203	(703) 696-2118 (Phone) (703) 696-2114 (FAX) Andrea.Leeson@osd.mil	ESTCP Program Manager
Timothy J. McHale	Timothy J. McHale Naval Facilities Engineering Command Engineering Service Center, EV 411 1100 23rd Avenue Port Hueneme, CA 93043 (	805) 982-4805 ph (805) 982-4304 fx (805) 223-3461 cell timothy.mchale@navy.mil	COR
Chris Diggs	Fontana Water Company 8440 Nuevo Avenue Fontana, California 92335	(909) 822-2201, ext. 332 (Phone) cdiggs@fontanawater.com	Host Facility
Trent Henderson, P.E., DEE	ARCADIS 1400 North Harbor Blvd., Suite 700 Fullerton, California 92835	(714) 278-0992, ext. 3047 (Phone) (562) 500-8230 (Cell) (714) 278-0051 (FAX) thenderson@arcadis-us.com	Principal Investigator
Christopher C. Lutes	ARCADIS 4915 Prospectus Drive, Suite F Durham, North Carolina 27713	(919) 544-4535 (Phone) (919) 544-5690 (FAX) clutes@arcadis-us.com	Project Manager
Nicholas R. Pollack	Calgon Carbon Corporation P. O. Box 717 Pittsburgh PA 15230-0717	Work: 412-787-4785 Cell: 412-736-8341 Fax: 412-787-6682 npollack@calgoncarbon-us.com	Co-principal Investigator

POINT OF CONTACT Name	ORGANIZATION Name Address	Phone Fax E-mail	Role in Project
Charles Drewry	Calgon Carbon Corporation P. O. Box 717 Pittsburgh PA 15230-0717	Office/Cell 352 467 0103 Fax 562 864 4334 cdrewry@calgoncarbon-us.com	Sales Manager
Dr. Baohua Gu.	Baohua Gu, Ph.D. Leader, Environmental Chemistry and Technology Environmental Sciences Division Oak Ridge National Laboratory Oak Ridge, TN 37831	Ph: (865)-574-7286 Email: gub1@ornl.gov http://www.esd.ornl.gov/~b26/ gub1@ornl.gov	Project Advisor, Technology Developer

Appendix B: Project QAPP

Quality Assurance Project Plan

Integrated Ion Exchange Regeneration Process for Perchlorate in Drinking Water

ESTCP Project ER-0545

February, 2006

B.1 Purpose and Scope

This Quality Assurance Project Plan (QAPP) delineates our approach for monitoring the demonstration to ensure that the facilities, equipment, personnel, methods, practices, records, and controls are in conformance with ESTCP-approved data quality objectives. The QAPP was developed in accordance with recommended EPA guidance on data quality objectives, QAPP preparation, and data quality assessment. This QAPP is not intended to be a standalone document. Rather, it is a supplement to and an appendix of the project Demonstration Plan which outlines the broad approach to the project and includes extensive information germane to quality management..

B.2 Quality Assurance Responsibilities

Project team assignments are represented in the organization chart in Figure 3-4 of the Demonstration Plan.

The Principal Investigators (Trent Henderson and Dr. C.C. Chiang) have the following quality assurance (QA) responsibilities:

- Guide experimental design to ensure that client and stakeholder objectives are met
- Review demonstration QA project plan, sampling plans, test plans, etc.
- Review decisions about major corrective actions
- Periodically review interim data and make appropriate adjustments to the project plan in consultation with the client and host site Review final technical report and cost & performance report
- Ensure equipment and instrumentation is calibrated and in good working condition
- Serve as the primary QA reviewer and authority for engineering design matters.

The Project Manager (Chris Lutes) has the following QA responsibilities:

- Coordinate preparation of demonstration QA project plan, sampling plans, test plans, etc.

- Serve as the project's liaison with senior corporate management to ensure the assignment of adequate resources
- Ensure personnel assigned to project are adequately trained
- Ensure activities are carried out as planned and deviations are documented
- Initiate corrective action procedures
- Periodically review interim data and make appropriate adjustments to the project plan in consultation with the client and host site, communicate any problems or deviations from plan to the QA Officer
- Coordinate preparation of final technical report and cost & performance report

The QA Officer/Team Chief for this demonstration (Laura Nessley) has the following responsibilities:

- Review and approve demonstration QA project plan, sampling plans, test plans, etc.
- Supervise the work of other members of the QA team
- Perform periodic audits to ensure demonstration is conducted as planned and any deviations from plan or standard methods are adequately documented
- Report any audit findings or problems to the Project Manager
- Review laboratory data and ensure it is supported by appropriate quality assurance/quality control (QA/QC) information
- Review final report and cost & performance report to ensure that is accurately describes the methods and standard operating procedures, and that the reported results are supported by raw data

It is the responsibility of the Project Manager and Associate Project Manager to ensure that required QA/QC documentation is in place before any demonstration activity is begun and that documented QA/QC activities are carried out in all phases of the demonstration. Christopher Lutes is the Project Manger and Angie Frizzell is the Deputy Project Manager for this demonstration. Project Management is responsible for ensuring that staff members are adequately trained to perform assigned duties.

Ms. Laura Nessley is the QA Officer/Team Chief for the demonstration. Ms. Nessley is the QA Manager for ARCADIS' Technology Services Division. The QA Officer will assume responsibility for, or assign an on-site QA representative to perform QA support activities during the demonstration. Any designated QA representative will report regularly to Ms. Nessley and will be jointly responsible for ensuring that QA tasks meet contractual requirements as well as the requirements that are established in the ARCADIS Durham Office Quality Management Plan. The QA Officer's responsibilities include support in the preparation and review of this QA project plan, conducting internal systems and/or performance audits, QA/QC reporting, and involvement in the correction of any issues leading to data quality concerns.

The six additional members of the QA Team will have the following functions:
The Measurement QA manager will perform validations of laboratory data and reviews of internally-generated data (as prescribed in Section B.4.5). The Engineering QA manager

will be responsible for reviews of engineering designs and drawings, and oversight of operations and performance monitoring. Auditors assigned to each site will have responsibility for on-site QA audits during demonstration activities and reviews of the data generated. Calgon's internal QA officer and the QA officer of the primary commercial laboratory to be used are also members of the QA team. These staff members are shown in figure 3-4.

As Project Managers, Mr. Lutes and Ms. Frizzell will openly communicate with both Ms. Nessley and the principal investigators/senior project advisors. Project personnel including four Task Managers, other technical staff, and field technicians are expected to work closely with the QA Officer to ensure that QA/QC activities are adequate and that any problems are identified and corrected. Corrective actions are initiated by the Project Manager and reported to both the Principal Investigators and the QA Officer.

It is the intention of ARCADIS that communications about data quality flow freely both up and down the organizational chart during the demonstration. Past experience in ARCADIS suggests that it is imperative to include field level personnel in communications pertinent to data quality. This open communication to and from field staff will aid in ascertaining the quality of the data generated during the effort.

B.3 Data Quality Parameters

Data quality parameters for the project are accuracy, precision, completeness, comparability and representativeness. Accuracy, precision, and completeness for the analytical measurement process will be calculated in the manner described in Section B.6. These parameters are routinely determined by contract analytical laboratories in keeping with their commitment to quality control. Further discussion of individual data quality parameters is provided below.

The project team and its subcontracted analytical laboratories will rely primarily on timely servicing and appropriate calibration of analytical instruments to attain accuracy. Accuracy goals for analytical measurements are specified in table B-1 below and in some cases the methods for each parameter (methods to be used are given in Table 3-3 of the Demonstration Plan). Accuracy goals are tested through the use of laboratory control samples and matrix spike samples. The results of this testing will be reported by the laboratory to the project team. The analyte list contains parameters that have been chemically quantified for many years in environmental media. As a result, correctly performed analysis of these parameters is capable of generating the accuracy needed to guarantee the success of this demonstration. It is important to attain a high level of accuracy to facilitate inter-comparison of analytical results from different treatment elements and multiple treatment cycles.

Both ARCADIS and Calgon routinely check the precision of analytical field instruments in the course of collecting data during field sampling activities. Likewise, the contract analytical laboratories chosen for this project are accustomed to precision goals. Some of the analytical

methods in Table 3-3 contain precision goals that will be tested by runs of laboratory-prepared replicates. In addition, field duplicate samples for all analytes will be provided to the laboratories as described in Section B.4.1 to test for analytical precision. For the three critical parameters (perchlorate, nitrate and uranium), the precision goal for field duplicates is 15% relative percent difference, irrespective of what may be listed in the individual methods. For the other two critical parameters (NDMA, NDEA), the precision goal for field duplicates is 25% relative percent difference (note given the low concentrations of these parameters expected a 30% goal is suggested by Cheng/Water Reuse Foundation quoting California Department of Health Services[1]). For the other parameters the accuracy goal will be 25% relative percent difference, unless a more stringent goal is specified in the applicable method.

Completeness is defined as the number of acceptable measurements compared to the number of total measurements taken expressed as percent. Acceptable measurements are defined as measurements that fall within data quality indicator (DQI) goals for accuracy and precision. The completeness goal for this demonstration project is 90% for all parameters, to be applied separately to the ion exchange portion of the samples, the regeneration system samples and the destruction system samples.

Comparability is defined as the degree to which different methods, data sets, and/or decisions agree or can be represented as similar. The methods used to obtain data and the manner in which data is presented will be consistent throughout this program to ensure comparability between data sets. In the case of perchlorate, because of limitations in the primary analytical method to be used (EPA Method 314), an alternate method (331.0 or 332.0) will be used on a subset of duplicate samples. A discussion of the comparability of the two methods is provided in Section 3.6.7.3 of the Demonstration Plan. Since the methods specified in Table 3-3 of the demonstration plan are for the most part standard in the industry comparability should be good.

Representativeness of water samples will be assured by a long-term monitoring record already established by the Fontana facility, as well as by a year's worth of data collection during the demonstration. The project team has based site selection and design parameters on available data from operations at Fontana and will verify the baseline conditions during the first round of influent analysis and throughout the demonstration.

Representativeness will also be addressed through sampling procedures. The sample storage and preservation requirements (Section B.6) will apply to all samples. Specific sample collection methods will also apply to pipes and tanks. The ion exchange element of the demonstration will involve sampling from pipes; the regeneration and destruction elements will involve sampling from both pipes and tanks.

Perchlorate is the primary contaminant of concern. Because of its high solubility in water and "limited propensity to adsorb to moist soil surfaces," it is expected to be associated primarily

[1] Cheng, R.C. et all. "Alternative Methods for the Analysis of NDMA and Other Nitrosamines in Water and Wastewater", WaterReuse Foundation, Alexandria VA, 2005.

with the dissolved phase. The other analytes might be more likely to be associated with particulate, although particulate is expected to be low in the treated water. The concentration of perchlorate in the drinking water to be tested is so low that there is no possibility of density effects. The following sampling procedures will be observed:

- Pipes will be sampled from a faucet tap. The tap will be flushed out prior to sampling in order to remove anything that may have been sitting in the tap. The flow in the adsorption system will be effectively constant, thereby minimizing representativeness issues. Samples will be collected directly into sample containers whenever possible, to avoid contaminating the sample with an intermediate collection device.
- Tanks will be sampled from sampling ports on the tanks. For sampling ports 101-103 which are on the feed tanks: the feed tanks are recirculated/mixed after reconstitution (if necessary) before taking a sample. The sample will be pulled off after the tank is well mixed.

B.4 Calibration Procedures, QC Checks and Corrective Actions

B.4.1 QA/QC Samples for Contract Lab Analyses

Samples to be analyzed by contract laboratories will be accompanied by QA/QC samples including duplicates, field blanks, trip blanks, matrix spike/matrix spike duplicate (MS/MSD) samples, and performance evaluation samples. The frequency of QA samples discussed here is based on the analytical matrix in Table 3-3 of the Demonstration Plan for performance verification samples that will be analyzed by commercial laboratories. QA/QC samples will be collected in the following manner:

Duplicate Samples

One duplicate sample of each laboratory analyte will be collected for every 8 samples, for an approximately 12.5% rate of duplicate sampling.

- For the ion exchange system, samples are collected in batches of 8, 4 or 2 per month. Thus, one duplicate sample will be collected for each batch of 8 samples, or for every second or fourth batch of 4 or 2 samples, respectively. This equates to one duplicate sample for every monthly batch of samples for perchlorate, nitrate, sulfate, pH, TDS and TOC; one duplicate sample for every other monthly batch of samples for chloride, fluoride and nitrosamines; and one duplicate sample for every fourth monthly batch of samples for all other analytes.
- For the regeneration and destruction systems, samples are collected in various-sized batches per cycle and differing numbers of cycles, which don't lend themselves to "per batch" tracking of duplicate samples. In addition, the regeneration and destruction systems will be operating simultaneously and in the same location, so samples from these systems will be combined in calculating duplicate sample requirements. The duplicate samples for each analyte will be tracked as the demonstration proceeds to be sure the one in eight QA/QC sampling requirements are covered.

Field Blanks
One field blank will be prepared for each laboratory analyte for every eight samples, for an approximately 12.5% rate of field blank samples. The sampling scheme for field blanks is therefore the same as for duplicate samples. Field blanks will be prepared by filling laboratory-supplied sample containers with laboratory grade analyte-free water.

Trip Blanks
One trip blank (for VOC analysis only) will be collected with every shipment of VOC samples. Samples from the regeneration and destruction systems may be batched together with one trip blank. Trip blanks will consist of samples of clean water prepared by the laboratory that are shipped to and from the site with the other VOC sample vials.

Batch-specific MS/MSDs
Laboratories will perform these analyses in accordance with method requirements, and no additional field sampling is required. Batch-specific MS/MSD results will be provided for all laboratory analytes.

Project-specific MS/MSDs
The additional sample volume required for project-specific MS/MSD analysis will be provided to the laboratory at a minimum rate of one MS/MSD sample per 24 samples, for a minimum 4.2% rate of project-specific MS/MSD samples. MS/MSD samples will be prepared by filling extra laboratory-supplied sample containers (as specified by the laboratory) with water from a sampling location and labeling the containers as MS/MSD samples.

- For the ion exchange system, this equates to one project-specific MS/MSD for every third monthly batch of samples for perchlorate, nitrate, sulfate, pH, TDS and TOC; one project-specific MS/MSD for every sixth monthly batch of samples for chloride, fluoride and nitrosamines; and one project-specific MS/MSD for every twelfth monthly batch of samples (one per project) for all other analytes.
- For the regeneration and destruction systems, the odd numbers of samples per batch and cycles don't lend themselves to "per batch" tracking of MS/MSD samples. In addition, the regeneration and destruction systems will be operating simultaneously and in the same location, so samples from these systems will be combined in calculating MS/MSD sample requirements. The MS/MSD samples for each analyte will be tracked as the demonstration proceeds to be sure QA/QC sampling requirements are covered.

Performance Evaluation Samples
If appropriate standards are commercially available, one performance evaluation sample will be provided for perchlorate and one for NDMA/NDEA analysis. The samples will consist of standard solutions of these analytes, purchased from a commercial vendor, and used to fill laboratory-supplied sample containers. The performance evaluation samples will not be identified to the laboratory as such.

B.4.2 QA/QC Samples for On-Site Analyses

The regeneration and destruction portions of the demonstration will involve on-site chemical analysis of certain parameters listed in Tables 3-7 and 3-8 of the Demonstration Plan. These parameters - total acidity, total iron and total ferrous iron - will be measured using Hach test kits. On-site analyses are limited to non-critical parameters to be used for engineering analysis rather than performance verification, and as such are subject to less rigorous QA/QC testing than the contract lab parameters discussed in the previous section. The following QA/QC testing will be performed relative to on-site analyses:

- Calibration as discussed in Section B.4.3
- Analysis of replicates for 5-10% of samples
- Verification testing of total iron at contract labs as part of the engineering analysis (Tables 3-7 and 3-8) and performance verification monitoring (Table 3-3).

B.4.3 Calibration Procedures

Calibration procedures for the standard EPA and Standard Methods are covered fully in those methods. Copies of the methods are available upon request.

Calibrations of Hach methods will be tested by measuring standard solutions as described in the Hach methods manuals. Calibration results that deviate from accuracy goals will be noted, and the corresponding data will be flagged.

B.4.4 Laboratory Duplicate and Control Testing

Duplicate and control testing for off-site analytical testing is specified by the individual analytical methods. The laboratories performing these analyses will comply with the testing requirements of the specified methods. On-site analyses are limited to non-critical parameters which do not have specified duplicate and control testing methods (e.g., temperature, Hach kit tests). For these analyses, replicate samples will be analyzed for 5-10% of samples (see QA sample summary in Section B.4.2). It is noted that most of the parameters to be analyzed on-site will also be analyzed (although generally at a lower frequency) at commercial labs as part of the performance verification sampling plan (Table 3-3 of the Demonstration Plan).

B.4.5 Data Reduction, Validation and Reporting

The subcontracted analytical laboratories will be required to submit all data packages as electronic data deliverables (EDDs) in Excel or a format that can easily be imported into Excel. Data structures are illustrated in Figure B-1 at the end of the QAPP. Data will be collated according to the three main unit process discussed in the demonstration plan. Thus, the proposed data structure is built primarily on subdirectories for each unit process with Excel workbooks for the main types of data (chemistry, engineering, fiscal). Then within the workbooks, separate worksheets will be established for different categories of final data (i.e., anions and perchlorate

on one worksheet, SVOCs and NDMA on another). These worksheets will be fed in turn by worksheets representing the individual laboratory batches/EDDs. The data files will be stored on an extranet site accessible to both ARCADIS and Calgon that is periodically backed up.

Data packages from subcontracted laboratories will contain Level II QA/QC data. Upon receipt of data from the subcontracted laboratories, the ARCADIS QA Officer will perform a validation of the perchlorate and NDMA/NDEA data using the USEPA National Functional Guidelines (NFG) for the Review of Organic Data, dated October 1999, NFG for the Review of Inorganic Data, dated July 2002, the method specific criteria, and professional judgment where applicable. The report will be evaluated for the following items, as appropriate: the chain of custody (to verify that requested analyses were conducted); analytical hold times; surrogate recoveries; blank contamination (method, equipment, field); laboratory control sample (LCS)/LCS duplicates; site-specific MS/ MSDs; laboratory duplicates; blind field duplicates; and laboratory footnotes and qualifications. Memoranda summarizing the findings of the data validations will be prepared for the project files.

For internally generated data, 100% of the data will be reviewed for reasonableness and completeness.

A final technical report and a cost and performance report will be prepared in accordance with ESTCP formats. It is anticipated that these reports will include both tabular and graphical depictions of the data collected. Methods to be used for data analysis, interpretation and evaluation are discussed in Section 4.3 of the Demonstration Plan.

B.5 Demonstration Procedures

Start-up activities for the demonstration are discussed in detail in Section 3.6.1 of the Demonstration Plan. Operations & maintenance of the system are described in Sections 3.6.1.through 3.6.5.4. The same discussions address foreseeable problems and corrective actions, including high differential pressure across resin beds (Section 3.6.1); accumulation of impurities in the regenerant solution and rinse water management (Section 3.6.5.2).

B.6 Calculation of Data Quality Indicators

Accuracy
Accuracy can be expressed as percent bias from a known standard or percent recovery based upon known spiked amounts. Percent bias is calculated using the following equation:

%Bias = [known value – obtained value)/known value] * 100

Percent recovery is calculated by:

%Recovery = [measured value/spiked amount] * 100

Precision
Precision, expressed as relative standard deviation (RSD) between replicate measurements can be determined using the formula:

%RSD = standard deviation of replicate measurements/average *100

Completeness
Completeness is defined as the number of acceptable measurements compared to the number of total measurements taken expressed as percent. Acceptable measurements are defined as measurements that fall within DQI goals for accuracy and precision.

Comparability
Comparability is defined as the degree to which different methods, data sets, and/or decisions agree or can be represented as similar. The methods used to obtain data and the manner in which data is presented will be consistent throughout this program to ensure comparability between data sets.

Representativeness
Representativeness is defined as the degree to which data accurately and precisely represent the frequency distribution of a specific variable in the population. Issues affecting representativeness in the sampling design are the number and position of sampling locations relative to each process element, the number of samples taken, and the analytes present at each site. Representativeness of samples from pipes and tanks is discussed in Section B.3.

Sample quality will be further optimized through proper preparation and handling in accordance with the requirements listed in Table B-1.

Table B-1. Sample Collection and Hold Time Requirements for Analytical Measurements

Analyte	Method (EPA unless otherwise cited)	Sample Size/Container	Preservative	Holding Time	Accuracy Goal (% Bias)
Perchlorate	314.0	250 ml Poly	None	28 Days	85-115%
Perchlorate*	331.0/332.0	20 ml Poly or Glass	Filter	28 Days	80-120%
Nitrate	300.0	250 ml Poly	None	48 Hours	85-115%
Sulfate	300.0	250 ml Poly	None	28 Days	85-115%
pH	SM4500H	250 ml Poly	None	3 Days	+/- 0.3 s.u.
TDS	SM2540C	500 ml Poly	None	7 Days	75-125%
TOC	SM5310C	250 ml Amber Glass	H_2SO_4	28 Days	75-125%

Analyte	Method (EPA unless otherwise cited)	Sample Size/Container	Preservative	Holding Time	Accuracy Goal (% Bias)
Chloride	300.0	250 ml Poly	None	28 Days	85-115%
Fluoride	300.0	250 ml Poly	None	28 Days	85-115%
Title 22 Metals (Al, Sb, As, Ba, Be, Cd, Cr, Pb, Hg, Mo, Ni, Se, Ag, Tl, B, V, Zn) Plus Major Cations (Na, Ca, K)	200.7	250 ml Poly	HNO_3	6 Months	80-120%
Dissolved Fe	200.7	250 ml Poly	HNO_3	6 Months	80-120%
Dissolved Mn	200.7/200.8	250 ml Poly	HNO_3	6 Months	80-120%
Dissolved U	200.7/200.8	250 ml Poly	HNO_3	6 Months	80-120%
Total Fe	200.7	250 ml Poly	HNO_3	6 Months	80-120%
Total Mn	200.7/200.8	250 ml Poly	HNO_3	6 Months	80-120%
Total As	200.7/200.8	250 ml Poly	HNO_3	6 Months	80-120%
Total U	200.8	250 ml Poly	HNO_3	6 Months	80-120%
VOCs	524.2	3 x 40 ml Glass	HCl (unchlorinated/raw water)	14 Days	See method
SVOCs and N/P Pesticides	525.2	2 x 1L Amber Glass	HCl (unchlorinated/raw water)	14 Days	See method
Nitrosamines	1625M or 521	2 x 1L Amber Glass	None (unchlorinated/raw water)	7 Days	75-125%
Gross Alpha*	900.0	1 L Plastic	HNO_3	180 Days	80-120%
Radon*	SM7500-Rn or EPA 913.0	2 x 40 ml VOA vials	None	4 Days	80-120%
Total Acidity	SM 2310B	120 ml Plastic	None	Regulatory=14 days SM=24 hours/ 6 hours if biological activity suspected	75-125%

B.7 Performance and Systems Audits

The ARCADIS QA Officer, or their designee, routinely performs audits to ensure that projects are performed according to plan and that acquired environmental data is of a known and defensible quality. Audits performed by ARCADIS on ARCADIS projects (including co-performers) are considered internal audits. Audits performed by a third party are considered external audits.

An internal technical systems audit (TSA) for each site (Fontana and Pittsburgh) will be performed during the early stages of this demonstration. The QA Officer or her designee will use this QAPP and the Demonstration Plan as a basis for the TSA checklist, in addition to the standard methods used for sampling and analysis. The purpose of the technical systems audit is to ensure that the project is carried out as planned and that any deviations from the methods or plan are adequately documented. To reduce costs, the QA Officer may assign a Deputy QA Officer from an office located in close proximity to the sampling site to perform the field audit of sampling procedures. The Deputy QA Officer will be independent of the project and technically qualified to carry out this duty.

Audits and performance evaluation programs by various regional and federal agencies are commonly conducted for the laboratories that will analyze project samples (i.e. NELAP, ELCP, EPA, COE). If the laboratories selected for the demonstration have not previously or recently been audited by ARCADIS, audit reports from these agencies will be reviewed to determine whether data produced by the labs will fulfill the objectives of the program. The audit review will assess any performance evaluation samples that the contracted analytical laboratory already analyzes for other purposes, such as state or federal certifications. Results of project-specific performance evaluation samples to be submitted to the primary laboratory (see Section B.4.1) will also be considered in the review.

A laboratory audit memorandum will be prepared which will recommend corrective actions or procedures to correct any deficiencies identified during the external audits(s), and which will make a recommendation as to the necessity of an internal audit. The audit results and discussion will be incorporated into progress reports and the final report as appropriate.

Primary Laboratory. The laboratory to be used for the majority of project samples is Weck Laboratories of City of Industry, California. Weck participates in a number of required proficiency testing (PT) programs and other non-required and special PT programs, including NDMA and perchlorate PT studies, client specific blind samples and internal PT samples ordered for parameters that are not part of the standard Proficiency Testing programs. Other details of Weck's QA/QC programs are detailed in the QA manual in Appendix D of the Demonstration Plan.

Contingency Laboratory. A separate laboratory, yet to be selected, will be used to analyze perchlorate samples by an alternate method. Laboratories under consideration for this position are STL of Savannah, Georgia, and WCAS of Santa Fe Springs, California.

Other laboratories to be used include Severn Trent Laboratories (STL) of Sacramento, California for NDMA and uranium analysis, and FGL Environmental of Santa Paula, California for radon and gross alpha analysis.

In case Weck is unable to perform, one or more of the secondary laboratories will be utilized wherever possible.

B.8 Quality Assurance Reports

Quality related problems will be addressed in quarterly, on-line progress reports to ESTCP prepared by the Project Manager and in annual presentations. Progress reports will detail any limitations on the data and any corrective actions that were implemented to resolve the problem. Interested parties will thus be aware of these issues, if any arise, before completion of the final report.

Any findings, problems, or observations found through internal audits by the QA Officer will be reported directly to the Project Manager. Major concerns will be expressed on the day of the audit if immediate corrective actions are necessary. The QA Officer will submit an audit report to the Project Manager within 15 days of completion of any internal audit.

B.9 Data Format

Four broad classes of data are expected to be collected in this project.

I. The field measurements of drinking water parameters and other field observations
II. Laboratory measurements of water parameters, both perchlorate and various indicators of the efficiency of the ion exchange, regeneration and destruction systems
III. Engineering data on the design and operation of treatment system elements
IV. Economic data on each element of the treatment system

Class I Data. Class I data will be recorded on standardized field forms. These forms will be filled out directly, promptly, and legibly in ink. Data entries will be dated and signed. Corrections will be made with a single line cross-out and initialed. Corrections other than typographical will include a note specifying the reason.

Standard chain-of-custody procedures will be followed. Field personnel are responsible for the care and custody of the samples collected until they are properly and formally transferred to another person or facility. To simplify the chain-of-custody record, as few people as possible should handle the sample or physical evidence during the investigation or inspection. Field documentation will be completed using waterproof, indelible ink on either pre-printed forms or in bound field logbooks.

A chain-of-custody form will be completed for samples to be sent to off-site laboratories. A separate chain-of-custody record will be utilized for each final destination or laboratory utilized during the investigation. During and at the end of the field work, the field managers and the project manager will determine whether these procedures have been adequately followed and/or if the collection of additional samples is required to protect the integrity of sample data.

A field log may also be used to supplement the forms with notes and drawings describing the location, field conditions, and method of sample collection and identification. All aspects of sample collection and handling as well as visual observations will be documented in bound field logbooks with numbered pages or on the standardized forms. Sample collection equipment (where appropriate), field analytical equipment, and equipment utilized to make physical measurements will be identified in the field logbooks or forms. Calculations, results, and calibration data for field sampling, field analytical, and field physical measurement equipment will be recorded in the field logbooks or forms. Field analyses and measurements must be traceable to the specific piece of field equipment utilized and to the field investigator collecting the sample, making the measurement, or performing the analysis.

Entries in field logbooks or the preprinted sampling forms will be dated, be legible, and contain accurate and inclusive documentation of an individual's project activities. Since field records are the basis for later written reports, language should be objective, factual, and free of personal feelings or other inappropriate terminology. At the end of each day's activity, or of a particular event as appropriate, field documents will be secured by the field manager for each task. Once completed, these field logbooks and/or pre-printed forms become accountable documents and must be maintained as part of project files. Entry errors will be corrected by drawing a single line through the erroneous entry and changing the entry. Entry errors/corrections will be initialed and dated.

Class II Data. Class II data will generally be received in the form of formal reports from the analytical laboratories and subcontracted organizations. The nature of these paper reports is discussed in more detail in Section B.4.4. ARCADIS anticipates receiving almost all of the analytical data on concentrations in the form of electronic deliverables. The subcontracted laboratories will be required to submit data in Excel-compatible format. The data can then be directly imported into spreadsheets for table preparation. Data formats within Weck Labs are discussed in Appendix D of the Demonstration Plan.

Class III Data. Class III data is of two types: engineering designs and field operating data. Engineering designs will be documented in AutoCAD files and printouts with appropriate signature blocks indicating the names of the preparer, the reviewer, and senior design professionals or project management personnel who have approved it. Field operating data such as reagent doses, flow rates and concentrations will be documented on standard forms to be developed during the project before the beginning of field operations.

Class IV Data. Procedures for collection of class IV (economic) data are discussed in Section 5.1 of the Demonstration Plan.

The predetermined limits for data acceptability are discussed in Section B.3. Should these limits be exceeded, corrective action will be taken. Corrective action may be a discussion in a final report, recalibration of an instrument, repeat sampling or analysis, etc. Therefore, the judgment of the project manager and principal investigator will be important factors in corrective action

initiation. Corrective actions will be guided by the relative importance of a given measurement to the overall test objectives and the degree to which data quality limits have been exceeded.

Staff members are responsible for reporting any identified quality assurance problems to the project manager promptly. The project manager will be responsible for selecting corrective action in consultation with the quality assurance officer and principal investigator as appropriate. ARCADIS anticipates conducting weekly internal conference calls during the initial weeks of operation to ensure that the system is operated optimally and any unforeseen circumstances that arise are properly noted and addressed. Quarterly data reviews are also planned.

B.10 Data Storage and Archiving Procedures

Class I Data Storage. Class I data form originals will be retained in ARCADIS' Fullerton, California office and Calgon's Pittsburgh, Pennsylvania office. Electronic copies of the forms will be forwarded to a central project archive to be maintained in ARCADIS' Durham, North Carolina office. Thus, this data will be stored in both electronic and paper files.

Class II Data Storage. Class II data pertaining to the ion exchange system will be received in paper and electronic formats in ARCADIS' Durham, North Carolina office. Class II data pertaining to the regeneration and destruction systems will be received in paper and electronic formats Calgon's Pittsburgh, Pennsylvania office; electronic copies of the forms will be forwarded to the central project archive. Copies of the data will be distributed as needed to staff in other project team offices involved in data interpretation. It is also anticipated that the analytical laboratories involved will maintain their own copies of this data set for a period of years. However, this cannot be relied upon since firms in the analytical laboratory business have a history of rapid change.

Class III Data Storage. Class III engineering design data will be archived to the central project file following preparation. Copies will also be maintained in any office preparing engineering designs. Field operating data will be handled in the same manner as Class I data.

Class IV Data Storage. Class IV data will be archived to the central project file in ARCADIS' Durham, North Carolina office.

Archiving Procedures. The central hardcopy project archives at ARCADIS' Durham, North Carolina office will be maintained on-site until the final reports are finalized for this project. This archive will include data, documentation, records, protocols, reports, and correspondence. The archive will be transferred off-site at the completion of the project and stored for at least five years in a commercial file storage warehouse operated by Iron Mountain, Inc., 130 Nova Drive, Morrisville, North Carolina. The masonry and steel construction of this facility protects from most natural and human threat. Iron Mountain is the sole tenant of the facility, thus eliminating any conflicts associated with a multi-tenant facility. The facility can only be accessed by card key entry. Only those on the authorized list have access to the facility. The facility is monitored

24 hours a day, 365 days a year, by Sonitrol Security Systems. They employ the following type of security measures: motion, sound, smoke and heat detectors, as well as laser-trigger alarms. The facility is protected against fire by an Early Suppression Fast Response (ESFR) 6 ln. central sprinkler system. Their operating system for records management is Total Recall by DHS Associates, Inc. of Orange Park, Florida. A backup tape for the Iron Mountain Facilities records is created daily and sent off-site to a secure vault location to ensure that the data is protected and can be restored in the event of an emergency. The property the facility is on has been determined by FEMA, as of March 3, 1992, to be located in the 500 year flood plain, Zone X on map number 37183CO284E, community number 370242 and 550 feet from the 100 year flood plain.

The central electronic project archive will also be maintained in ARCADIS' Durham, North Carolina office on the central office server. The directory that will be used is accessible only to the project manager, system administrator and a small group of the project manager's direct reports. This server is backed up to tape daily by the system administrator, and the tapes are maintained for three months. Tapes are stored in an on-site, fireproof cabinet. At the completion of this project ARCADIS anticipates placing the primary data tables on CD for ease of storage and access.

Data Availability Following Key Personnel Changes. In order to ensure data availability following key personnel changes, the project manager will be notified of any change in the employment status of that employee either by the employee or their direct supervisor (such as an office manager). The project manager will immediately take action as appropriate in conjunction with operations management to ensure the integrity and readability of all data. Should the transition affect the project manager himself, the principal investigator and quality assurance officer will work together to ensure the integrity and readability of all data.

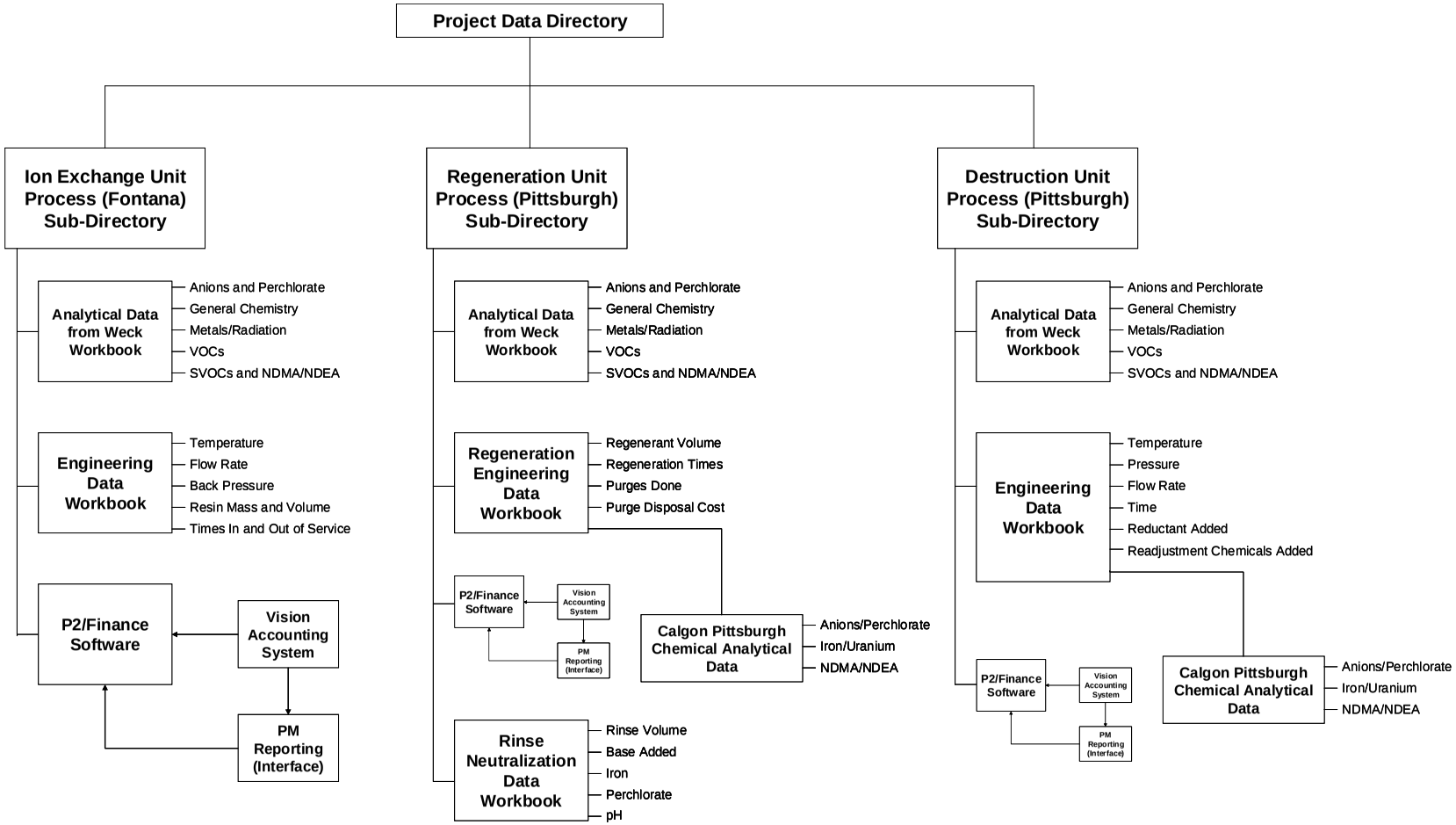

Figure B-1. Data Structures

Appendix C: Detailed Data Tables

Appendix C1: IX Operational Data

Bed Volume Cycle 1:	**115**	**Gallons**
Bed Volume Cycle 2:	**112**	**Gallons**
Bed Volume Cycle 3:	**107**	**Gallons**
Bed Volume Cycle 4:	**107**	**Gallons**

Date / Time	Period Time (Minutes)	Period Down-Time (Minutes)	Cumulative Run-Time (Minutes)	Period Up-Time Average (%)	Up-Time Rolling Average (%)
1/17/07 14:50	--	--	0	--	--
1/18/07 12:42	1,312		1,312	100%	100%
1/20/07 8:15	2,613		3,925	100%	100%
1/23/07 11:30	4,515		8,440	100%	100%
1/24/07 11:15	1,425		9,865	100%	100%
1/26/07 9:15	2,760	150	12,475	95%	99%
1/31/07 11:20	7,325	120	19,680	98%	99%
2/2/07 9:00	2,740		22,420	100%	99%
2/5/07 11:02	4,442		26,862	100%	99%
2/7/07 9:45	2,803	68	29,597	98%	99%
2/12/07 9:45	7,200	30	36,767	100%	99%
2/14/07 9:45	2,880	40	39,607	99%	99%
2/14/07 12:10	145		39,752	100%	99%
2/16/07 9:00	2,690		42,442	100%	99%
2/16/07 11:43	163		42,605	100%	99%
2/21/07 9:13	7,050	2,873	46,782	59%	93%
2/22/07 12:37	1,644	247	48,179	85%	93%
2/28/07 10:59	8,542	1,430	55,291	83%	92%
3/7/07 10:11	10,032		65,323	100%	93%
3/14/07 9:57	10,066		75,389	100%	94%
3/21/07 10:49	10,132		85,521	100%	95%
3/28/07 10:13	10,044		95,565	100%	95%
3/29/07 10:30	1,457		97,022	100%	95%
4/4/07 10:32	8,642		105,664	100%	96%
4/11/07 10:20	10,068		115,732	100%	96%
4/18/07 9:05	10,005	60	125,677	99%	96%
4/25/07 11:23	10,218		135,895	100%	96%
5/2/07 10:34	10,031		145,926	100%	97%
5/9/07 10:00	10,046		155,972	100%	97%
5/16/07 11:52	10,192	850	165,314	92%	97%
5/23/07 11:24	10,052		175,366	100%	97%
5/30/07 11:08	10,064		185,430	100%	97%
6/8/07 11:08	**12,960**		**198,390**	**100%**	**97%**

Date / Time	Period Time (Minutes)	Period Down-Time (Minutes)	Cumulative Run-Time (Minutes)	Period Up-Time Average (%)	Up-Time Rolling Average (%)
8/10/07 16:20	0	0	0	--	--
8/10/07 16:45	25		25	100%	100%
8/20/07 15:00	14,295	14,295	25	0%	0%
8/31/07 9:22	15,502		15,527	100%	52%
8/31/07 13:12	230		15,757	100%	52%
9/4/07 11:01	5,629		21,386	100%	60%
9/5/07 10:16	1,395		22,781	100%	61%
9/6/07 8:18	1,322		24,103	100%	63%
9/7/07 12:56	1,718		25,821	100%	64%
9/10/07 18:44	4,668		30,489	100%	68%
9/12/07 12:55	2,531		33,020	100%	70%
9/14/07 11:27	2,792		35,812	100%	71%
9/17/07 11:56	4,349		40,161	100%	74%
9/18/07 13:04	1,508		41,669	100%	74%
9/19/07 12:45	1,421		43,090	100%	75%
9/21/07 10:50	2,765		45,855	100%	76%
9/24/07 14:20	4,530		50,385	100%	78%
9/26/07 13:55	2,855	1,610	51,630	44%	76%
9/28/07 13:51	2,876	1,769	52,737	38%	75%
10/1/07 14:42	4,371		57,108	100%	76%
10/3/07 12:50	2,768		59,876	100%	77%
10/5/07 12:34	2,864		62,740	100%	78%
10/8/07 11:21	4,247		66,987	100%	79%
10/10/07 15:49	3,148		70,135	100%	80%
10/12/07 9:35	2,506		72,641	100%	80%
10/15/07 13:13	4,538		77,179	100%	81%
10/17/07 13:05	2,872		80,051	100%	82%
10/19/07 9:44	2,679		82,730	100%	82%
10/22/07 12:19	4,475		87,205	100%	83%
10/24/07 13:54	2,975		90,180	100%	84%
10/26/07 13:14	2,840		93,020	100%	84%
10/29/07 13:08	4,314		97,334	100%	85%
10/31/07 11:33	2,785		100,119	100%	85%
11/2/07 10:40	2,827		102,946	100%	85%
11/5/07 10:42	4,322		107,268	100%	86%
11/7/07 9:05	2,783		110,051	100%	86%
11/9/07 7:38	2,793		112,844	100%	86%
11/12/07 13:04	4,646		117,490	100%	87%
11/14/07 12:30	2,846		120,336	100%	87%
11/16/07 12:58	2,908		123,244	100%	87%
11/19/07 11:23	4,225		127,469	100%	88%
11/21/07 11:27	2,884		130,353	100%	88%
11/23/07 12:08	2,921		133,274	100%	88%
11/26/07 11:25	**4,277**		**137,551**	**100%**	**89%**

Date / Time	Period Time (Minutes)	Period Down-Time (Minutes)	Cumulative Run-Time (Minutes)	Period Up-Time Average (%)	Up-Time Rolling Average (%)
1/2/08 11:36	0	0	0	--	--
1/2/08 13:47	131		131	100%	100%
1/4/08 10:51	2,704		2,835	100%	100%
1/7/08 13:03	4,452		7,287	100%	100%
1/9/08 12:33	2,850		10,137	100%	100%
1/10/08 7:52	1,159		11,296	100%	100%
1/11/08 12:17	1,705		13,001	100%	100%
1/14/08 14:50	4,473	106	17,368	98%	99%
1/16/08 14:15	2,845		20,213	100%	99%
1/18/08 23:14	3,419		23,632	100%	100%
1/21/08 12:11	3,657		27,289	100%	100%
1/23/08 13:08	2,937		30,226	100%	100%
1/25/08 10:07	2,699		32,925	100%	100%
1/28/08 12:31	4,464		37,389	100%	100%
1/30/08 8:07	2,616		40,005	100%	100%
2/1/08 7:55	2,868		42,873	100%	100%
2/4/08 10:04	4,449		47,322	100%	100%
2/6/08 8:37	2,793		50,115	100%	100%
2/8/08 9:43	2,946		53,061	100%	100%
2/11/08 11:52	4,449		57,510	100%	100%
2/13/08 8:57	2,705		60,215	100%	100%
2/15/08 13:47	3,170		63,385	100%	100%
2/18/08 11:16	4,169		67,554	100%	100%
2/20/08 12:54	2,978		70,532	100%	100%
2/22/08 10:05	2,711		73,243	100%	100%
2/25/08 11:53	4,428		77,671	100%	100%
2/27/08 8:40	2,687		80,358	100%	100%
2/29/08 12:52	3,132		83,490	100%	100%
3/3/08 13:45	4,373		87,863	100%	100%
3/5/08 8:11	2,546		90,409	100%	100%
3/7/08 13:22	3,191		93,600	100%	100%
3/10/08 9:20	4,078		97,678	100%	100%
3/12/08 10:04	2,924		100,602	100%	100%
3/14/08 9:09	2,825		103,427	100%	100%
3/17/08 11:17	4,448		107,875	100%	100%
3/19/08 12:24	2,947		110,822	100%	100%
3/21/08 14:19	2,995		113,817	100%	100%
3/24/08 11:14	4,135		117,952	100%	100%
3/26/08 11:23	2,889		120,841	100%	100%
3/28/08 11:00	2,857		123,698	100%	100%
3/31/08 11:33	4,353		128,051	100%	100%
4/2/08 11:10	2,857		130,908	100%	100%
4/4/08 10:44	2,854		133,762	100%	100%
4/7/08 11:05	4,341		138,103	100%	100%

4/9/08 13:36	3,031		141,134	100%	100%
4/11/08 11:48	2,772		143,906	100%	100%
4/14/08 12:43	4,375		148,281	100%	100%
4/16/08 13:06	2,903		151,184	100%	100%
4/18/08 14:01	2,935		154,119	100%	100%
4/25/08 14:28	10,107		164,226	100%	100%

Date / Time	Period Time (Minutes)	Period Down-Time (Minutes)	Cumulative Run-Time (Minutes)	Period Up-Time Average (%)	Up-Time Rolling Average (%)
7/24/08 11:30	0	0	0	--	--
7/24/08 12:46	76		76	100%	100%
7/28/08 9:49	5,583		5,659	100%	100%
7/31/08 11:43	4,434		10,093	100%	100%
8/4/08 8:58	5,595		15,688	100%	100%
8/7/08 8:41	4,303		19,991	100%	100%
8/11/08 10:13	5,852		25,843	100%	100%
8/14/08 12:09	4,436	9	30,270	100%	100%
8/18/08 9:51	5,622		35,892	100%	100%
8/21/08 11:42	4,431		40,323	100%	100%
8/25/08 8:22	5,560		45,883	100%	100%
8/28/08 11:26	4,504		50,387	100%	100%
9/2/08 10:46	7,160		57,547	100%	100%
9/4/08 9:35	2,809		60,356	100%	100%
9/11/08 7:18	9,943		70,299	100%	100%
9/18/08 11:53	10,355		80,654	100%	100%
9/25/08 7:02	9,789		90,443	100%	100%
10/2/08 9:27	10,225		100,668	100%	100%
10/9/08 10:08	10,121		110,789	100%	100%
10/16/08 12:45	10,237	6,120	114,906	40%	95%
10/24/08 11:40	11,455	1,440	124,921	87%	94%
10/30/08 9:54	8,534		133,455	100%	95%
11/6/08 9:54	10,080		143,535	100%	95%
11/13/08 10:26	10,112		153,647	100%	95%
11/21/08 11:00	11,554	4,176	161,025	64%	93%
11/25/08 13:39	5,919	5,859	161,085	1%	90%
12/4/08 11:19	12,820		173,905	100%	91%
12/11/08 9:30	9,971	1,440	182,436	86%	91%

Date / Time	Inlet Pressure (PSI)	Inlet Temp (F)	Effluent Pressure (PSI)	Effluent Temp (F)	Operating Well
1/17/07 14:50					F-17B
1/18/07 12:42	39	--	34	--	F-17B
1/20/07 8:15	41	--	36	--	F-17B
1/23/07 11:30	41	--	35	--	F-17B
1/24/07 11:15	41	--	34	--	F-17B
1/26/07 9:15	40	--	34	--	F-17B
1/31/07 11:20	38	--	35	--	F-17B
2/2/07 9:00	40	74.3	34	75.2	F-17B
2/5/07 11:02	38	75.5	21	75.5	F-17B
2/7/07 9:45	38	73.4	32	75.5	F-17B
2/12/07 9:45	39	69.4	34	71.0	F-17B
2/14/07 9:45	38	75.9	34	74.3	F-17B
2/14/07 12:10	38	75.9	34	74.3	F-17B
2/16/07 9:00	38	74.3	32	77.1	F-17B
2/16/07 11:43	38	74.3	32	77.1	F-17B
2/21/07 9:13	--	--	--	--	F-17B
2/22/07 12:37	40	--	34	--	F-17B
2/28/07 10:59	40	73.5	34	71.5	F-17B
3/7/07 10:11	40	74.6	33	74.8	F-17B
3/14/07 9:57	38	75.2	32	75.9	F-17B
3/21/07 10:49	38	72.8	32	73.5	F-17B
3/28/07 10:13	38	--	32	--	F-17B
3/29/07 10:30	34	--	26	--	F-17B
4/4/07 10:32	49	75.2	46	77.7	F-17B / F-17C
4/11/07 10:20	50	76.1	42	74.8	F-17B / F-17C
4/18/07 9:05	50	72.6	43	72.5	F-17B / F-17C
4/25/07 11:23	50	77.1	42	77.3	F-17B / F-17C
5/2/07 10:34	53	76.1	44	76.6	F-17B / F-17C
5/9/07 10:00	54	--	44	--	F-17B / F-17C
5/16/07 11:52	53	75.3	45	75.0	F-17B / F-17C
5/23/07 11:24	54	75.7	44	77.3	F-17B / F-17C
5/30/07 11:08	51	76.4	42	76.8	F-17B / F-17C
6/8/07 11:08	**50**	**--**	**42**	**--**	**F-17B / F-17C**

Date / Time	Inlet Pressure (PSI)	Inlet Temp (F)	Effluent Pressure (PSI)	Effluent Temp (F)	Operating Well
8/10/07 16:20					F-17B / F-17C
8/10/07 16:45					F-17B / F-17C
8/20/07 15:00					F-17B / F-17C
8/31/07 9:22	48	80.0	40	79.3	F-17B / F-17C
8/31/07 13:12	48	80.0	40	79.3	F-17B / F-17C
9/4/07 11:01	49	79.5	40	78.8	F-17B / F-17C
9/5/07 10:16	50	77.3	42	77.5	F-17B / F-17C
9/6/07 8:18	49	73.2	42	73.9	F-17B / F-17C
9/7/07 12:56	49	76.6	42	77.1	F-17B / F-17C
9/10/07 18:44	47	75.9	40	75.9	F-17B / F-17C
9/12/07 12:55	48	76.6	39	77.5	F-17B / F-17C
9/14/07 11:27	50	76.1	42	76.3	F-17B / F-17C
9/17/07 11:56	50	74.8	41	75.3	F-17B / F-17C
9/18/07 13:04	49	75.2	42	75.3	F-17B / F-17C
9/19/07 12:45	49	74.3	42	74.3	F-17B / F-17C
9/21/07 10:50	49	74.4	42	75.3	F-17B / F-17C
9/24/07 14:20	48	75.2	39	76.1	F-17B / F-17C
9/26/07 13:55	48	76.6	38	77.1	F-17B / F-17C
9/28/07 13:51	49	73.9	40	74.3	F-17B / F-17C
10/1/07 14:42	49	76.2	40	76.8	F-17B / F-17C
10/3/07 12:50	49	76.1	40	77.3	F-17B / F-17C
10/5/07 12:34	49	73.7	41	74.1	F-17B / F-17C
10/8/07 11:21	50	75.7	40	76.1	F-17B / F-17C
10/10/07 15:49	50	74.4	40	74.8	F-17B / F-17C
10/12/07 9:35	50	73.7	42	74.4	F-17B / F-17C
10/15/07 13:13	50	73.2	41	74.1	F-17B / F-17C
10/17/07 13:05	50	74.6	40	74.8	F-17B / F-17C
10/19/07 9:44	50	76.2	40	77.5	F-17B / F-17C
10/22/07 12:19	51	74.6	41	74.4	F-17B / F-17C
10/24/07 13:54	51	77.0	40	77.1	F-17B / F-17C
10/26/07 13:14	51	76.0	40	76.2	F-17B / F-17C
10/29/07 13:08	51	75.2	40	75.5	F-17B / F-17C
10/31/07 11:33	52	75.3	40	75.5	F-17B / F-17C
11/2/07 10:40	53	74.8	8	75.2	F-17B / F-17C
11/5/07 10:42	55	74.3	45	74.1	F-17B / F-17C
11/7/07 9:05	54	74.6	43	74.8	F-17C
11/9/07 7:38	53	70.5	48	72.1	F-17C
11/12/07 13:04	55	75.3	43	75.7	F-17C
11/14/07 12:30	54	75.7	46	76.8	F-17C
11/16/07 12:58	55	74.4	46	75.2	F-17C
11/19/07 11:23	55	74.6	43	74.8	F-17C
11/21/07 11:27	52	73.5	43	74.1	F-17C
11/23/07 12:08	52	73.5	43	73.9	F-17C
11/26/07 11:25	**52**	**73.9**	**42**	**74.3**	**F-17C**

Date / Time	Inlet Pressure (PSI)	Inlet Temp (F)	Effluent Pressure (PSI)	Effluent Temp (F)	Operating Well
1/2/08 11:36					F-17C
1/2/08 13:47	>30.0	75.9	20	75.8	F-17C
1/4/08 10:51	>30.0	70.1	30	73.0	F-17C
1/7/08 13:03	>30.0	73.2	30	73.5	F-17C
1/9/08 12:33	>30.0	70.3	30	73.2	F-17C
1/10/08 7:52	>30.0	--	31	--	F-17C
1/11/08 12:17	>30.0	75.2	30	74.6	F-17C
1/14/08 14:50	>30.0	75.0	30	74.7	F-17C
1/16/08 14:15	>30.0	71.7	30	71.9	F-17C
1/18/08 23:14	>30.0	71.6	30	72.8	F-17C
1/21/08 12:11	>30.0	70.7	30	72.3	F-17C
1/23/08 13:08	>30.0	71.6	30	72.1	F-17C
1/25/08 10:07	>30.0	72.6	31	73.2	F-17C
1/28/08 12:31	>30.0	71.0	30	72.5	F-17C
1/30/08 8:07	>30.0	66.9	31	72.1	F-17C
2/1/08 7:55	>30.0	67.6	31	71.7	F-17C
2/4/08 10:04	>30.0	73.7	31	73.5	F-17C
2/6/08 8:37	>30.0	69.0	31	72.6	F-17C
2/8/08 9:43	>30.0	74.3	30	74.3	F-17C
2/11/08 11:52	>30.0	75.0	30	75.5	F-17C
2/13/08 8:57	>30.0	74.3	36	74.6	F-17C
2/15/08 13:47	>30.0	74.6	36	74.8	F-17C
2/18/08 11:16	>30.0	73.2	36	73.5	F-17C
2/20/08 12:54	>30.0	69.6	37	70.8	F-17C
2/22/08 10:05	>30.0	72.1	37	73.2	F-17C
2/25/08 11:53	>30.0	74.6	37	74.4	F-17C
2/27/08 8:40	>30.0	78.8	36	76.6	F-17C
2/29/08 12:52	>30.0	75.0	36	75.4	F-17C
3/3/08 13:45	>30.0	75.9	36	78.2	F-17C
3/5/08 8:11	>30.0	70.5	36	73.5	F-17C
3/7/08 13:22	>30.0	77.2	35	77.3	F-17C
3/10/08 9:20	>30.0	73.7	36	74.4	F-17C
3/12/08 10:04	>30.0	75.0	36	74.3	F-17C
3/14/08 9:09	>30.0	69.8	38	72.3	F-17C
3/17/08 11:17	>30.0	73.2	6	71.7	F-17C
3/19/08 12:24	>30.0	75.0	36	74.4	F-17C
3/21/08 14:19	>30.0	76.8	35	78.0	F-17C
3/24/08 11:14	>30.0	75.3	34	75.2	F-17C
3/26/08 11:23	>30.0	74.4	36	74.8	F-17C
3/28/08 11:00	>30.0	74.3	36	74.3	F-17C
3/31/08 11:33	>30.0	73.4	36	74.1	F-17C
4/2/08 11:10	>30.0	72.6	38	73.0	F-17C
4/4/08 10:44	>30.0	74.4	36	74.4	F-17C
4/7/08 11:05	>30.0	73.9	36	73.9	F-17C

4/9/08 13:36	>30.0	74.1	36	74.6	F-17C
4/11/08 11:48	>30.0	74.8	35	75.5	F-17C
4/14/08 12:43	>30.0	76.1	30	76.1	F-17C
4/16/08 13:06	>30.0	--	31	--	F-17C
4/18/08 14:01	>30.0	77.5	80	77.9	F-17C
4/25/08 14:28	>30.0	77.7	78	76.8	F-17C

Date / Time	Inlet Pressure (PSI)	Inlet Temp (F)	Effluent Pressure (PSI)	Effluent Temp (F)	Operating Well
7/24/08 11:30					F-17C
7/24/08 12:46	>30.0	75.3	40	76.2	F-17C
7/28/08 9:49	>30.0	74.8	40	74.4	F-17C
7/31/08 11:43	>30.0	75.9	36	76.1	F-17C
8/4/08 8:58	>30.0	77.7	36	76.6	F-17C
8/7/08 8:41	>30.0	76.6	34	76.9	F-17C
8/11/08 10:13	>30.0	77.1	34	76.4	F-17C
8/14/08 12:09	>30.0	77.0	33	77.5	F-17C
8/18/08 9:51	45	77.1	34	76.8	F-17C
8/21/08 11:42	45	77.5	34	77.3	F-17C
8/25/08 8:22	45	77.9	33	78.2	F-17C
8/28/08 11:26	45	77.5	33	77.5	F-17C
9/2/08 10:46	44	77.5	33	77.3	F-17C
9/4/08 9:35	44	77.1	33	76.8	F-17C
9/11/08 7:18	46	72.3	34	73.4	F-17C
9/18/08 11:53	44	78.6	32	78.0	F-17C
9/25/08 7:02	46	73.2	34	73.9	F-17C
10/2/08 9:27	44	77.1	32	77.3	F-17C
10/9/08 10:08	44	77.7	32	77.5	F-17C
10/16/08 12:45	0	N/A	0	N/A	None
10/24/08 11:40	43	77.9	32	78.2	F-17B
10/30/08 9:54	44	77.0	32	76.6	F-17B
11/6/08 9:54	43	76.6	32	75.5	F-17B
11/13/08 10:26	44	78.0	32	76.8	F-17B
11/21/08 11:00	0	N/A	0	N/A	F-17B
11/25/08 13:39	44	75.5	31	74.8	F-17B
12/4/08 11:19	45	74.6	34	74.3	F-17B
12/11/08 9:30	0	N/A	0	N/A	F-17B

Date / Time	Meter Volume (Gallons)	Meter Volume Treated (Gallons)	Meter Volume Treated (BVs)	Meter Flow Rate (GPM)	Period Meter Flow Rate (GPM)	Average Meter Flow Rate (GPM)
1/17/07 14:50	3,500	0	0	130.0	--	--
1/18/07 12:42	181,871	178,371	1,551	152.6	136.0	136.0
1/20/07 8:15	577,755	574,255	4,994	154.3	151.5	146.3
1/23/07 11:30	1,238,500	1,235,000	10,739	136.0	146.3	146.3
1/24/07 11:15	1,453,325	1,449,825	12,607	150.1	150.8	147.0
1/26/07 9:15	1,851,369	1,847,869	16,068	150.2	152.5	148.1
1/31/07 11:20	2,905,105	2,901,605	25,231	142.4	146.3	147.4
2/2/07 9:00	3,308,885	3,305,385	28,742	148.0	147.4	147.4
2/5/07 11:02	3,967,346	3,963,846	34,468	155.2	148.2	147.6
2/7/07 9:45	4,393,357	4,389,857	38,173	149.2	155.8	148.3
2/12/07 9:45	5,446,050	5,442,550	47,327	150.5	146.8	148.0
2/14/07 9:45	5,865,483	5,861,983	50,974	149.3	147.7	148.0
2/14/07 12:10	5,886,750	5,883,250	51,159	149.3	146.7	148.0
2/16/07 9:00	6,288,517	6,285,017	54,652	147.2	149.4	148.1
2/16/07 11:43	6,313,195	6,309,695	54,867	150.0	151.4	148.1
2/21/07 9:13	6,930,663	6,927,163	60,236	--	147.8	148.1
2/22/07 12:37	7,143,164	7,139,664	62,084	152.6	152.1	148.2
2/28/07 10:59	8,197,073	8,193,573	71,248	150.0	148.2	148.2
3/7/07 10:11	9,670,349	9,666,849	84,060	144.6	146.9	148.0
3/14/07 9:57	11,122,738	11,119,238	96,689	151.0	144.3	147.5
3/21/07 10:49	12,647,778	12,644,278	109,950	150.5	150.5	147.8
3/28/07 10:13	14,116,204	14,112,704	122,719	150.2	146.2	147.7
3/29/07 10:30	14,345,767	14,342,267	124,715	155.7	157.6	147.8
4/4/07 10:32	15,774,199	15,770,699	137,137	150.1	165.3	149.3
4/11/07 10:20	17,387,961	17,384,461	151,169	160.6	160.3	150.2
4/18/07 9:05	18,960,735	18,957,235	164,846	160.3	158.1	150.8
4/25/07 11:23	20,575,899	20,572,399	178,890	160.2	158.1	151.4
5/2/07 10:34	22,222,931	22,219,431	193,212	160.8	164.2	152.3
5/9/07 10:00	23,870,775	23,867,275	207,542	168.6	164.0	153.0
5/16/07 11:52	25,285,739	25,282,239	219,846	157.0	151.5	152.9
5/23/07 11:24	26,929,894	26,926,394	234,143	165.2	163.6	153.5
5/30/07 11:08	28,651,794	28,648,294	249,116	173.1	171.1	154.5
6/8/07 11:08	**30,819,688**	**30,816,188**	**267,967**	**168.4**	**167.3**	**155.3**

Date / Time	Meter Volume (Gallons)	Meter Volume Treated (Gallons)	Meter Volume Treated (BVs)	Meter Flow Rate (GPM)	Period Meter Flow Rate (GPM)	Average Meter Flow Rate (GPM)
8/10/07 16:20	30,819,972	30,816,472	0	100.0	--	--
8/10/07 16:45	30,822,413	2,441	22	100.0	97.6	97.6
8/20/07 15:00	30,822,413	2,441	22	150.0	0.0	97.6
8/31/07 9:22	33,051,197	2,231,225	19,922	163.9	143.8	143.7
8/31/07 13:12	33,088,225	2,268,253	20,252	158.8	161.0	144.0
9/4/07 11:01	33,989,484	3,169,512	28,299	162.1	160.1	148.2
9/5/07 10:16	34,212,999	3,393,027	30,295	160.4	160.2	148.9
9/6/07 8:18	34,425,256	3,605,284	32,190	158.3	160.6	149.6
9/7/07 12:56	34,685,699	3,865,727	34,515	152.3	151.6	149.7
9/10/07 18:44	35,345,977	4,526,005	40,411	160.0	141.4	148.4
9/12/07 12:55	35,856,607	5,036,635	44,970	167.8	201.8	152.5
9/14/07 11:27	36,298,756	5,478,784	48,918	156.3	158.4	153.0
9/17/07 11:56	36,997,618	6,177,646	55,158	161.0	160.7	153.8
9/18/07 13:04	37,236,935	6,416,963	57,294	153.6	158.7	154.0
9/19/07 12:45	37,452,398	6,632,426	59,218	152.0	151.6	153.9
9/21/07 10:50	37,873,389	7,053,417	62,977	153.0	152.3	153.8
9/24/07 14:20	38,615,290	7,795,318	69,601	163.5	163.8	154.7
9/26/07 13:55	38,817,630	7,997,658	71,408	160.1	162.5	154.9
9/28/07 13:51	38,892,418	8,072,446	72,075	177.1	67.6	153.1
10/1/07 14:42	39,658,495	8,838,523	78,915	174.4	175.3	154.8
10/3/07 12:50	40,142,591	9,322,619	83,238	175.5	174.9	155.7
10/5/07 12:34	40,643,431	9,823,459	87,709	174.6	174.9	156.6
10/8/07 11:21	41,388,249	10,568,277	94,360	175.2	175.4	157.8
10/10/07 15:49	41,941,059	11,121,087	99,295	175.8	175.6	158.6
10/12/07 9:35	42,382,237	11,562,265	103,235	176.7	176.0	159.2
10/15/07 13:13	43,184,074	12,364,102	110,394	176.7	176.7	160.2
10/17/07 13:05	43,691,975	12,872,003	114,929	176.7	176.8	160.8
10/19/07 9:44	44,165,917	13,345,945	119,160	176.5	176.9	161.3
10/22/07 12:19	44,961,995	14,142,023	126,268	180.1	177.9	162.2
10/24/07 13:54	45,508,498	14,688,526	131,148	181.2	183.7	162.9
10/26/07 13:14	46,027,769	15,207,797	135,784	180.0	182.8	163.5
10/29/07 13:08	46,814,342	15,994,370	142,807	182.5	182.3	164.3
10/31/07 11:33	47,322,709	16,502,737	147,346	184.1	182.5	164.8
11/2/07 10:40	47,851,823	17,031,851	152,070	190.2	187.2	165.4
11/5/07 10:42	48,641,085	17,821,113	159,117	183.7	182.6	166.1
11/7/07 9:05	49,064,325	18,244,353	162,896	150.9	152.1	165.8
11/9/07 7:38	49,497,052	18,677,080	166,760	142.9	154.9	165.5
11/12/07 13:04	50,211,179	19,391,207	173,136	153.8	153.7	165.0
11/14/07 12:30	50,649,561	19,829,589	177,050	153.2	154.0	164.8
11/16/07 12:58	51,097,573	20,277,601	181,050	155.4	154.1	164.5
11/19/07 11:23	51,737,570	20,917,598	186,764	152.7	151.5	164.1
11/21/07 11:27	52,223,557	21,403,585	191,103	168.3	168.5	164.2
11/23/07 12:08	52,713,266	21,893,294	195,476	170.1	167.7	164.3
11/26/07 11:25	**53,437,429**	**22,617,457**	**201,942**	**169.7**	**169.3**	**164.4**

Date / Time	Meter Volume (Gallons)	Meter Volume Treated (Gallons)	Meter Volume Treated (BVs)	Meter Flow Rate (GPM)	Period Meter Flow Rate (GPM)	Average Meter Flow Rate (GPM)
1/2/08 11:36	53,451,580	22,631,608	0	194.2	--	--
1/2/08 13:47	53,477,099	25,519	238	194.2	194.8	194.8
1/4/08 10:51	53,963,490	511,910	4,784	177.0	179.9	180.6
1/7/08 13:03	54,757,088	1,305,508	12,201	180.1	178.3	179.2
1/9/08 12:33	55,269,633	1,818,053	16,991	180.5	179.8	179.3
1/10/08 7:52	55,477,717	2,026,137	18,936	178.9	179.5	179.4
1/11/08 12:17	55,782,608	2,331,028	21,785	176.0	178.8	179.3
1/14/08 14:50	56,552,789	3,101,209	28,983	178.0	176.4	178.6
1/16/08 14:15	57,055,293	3,603,713	33,680	174.9	176.6	178.3
1/18/08 23:14	57,530,098	4,078,518	38,117	175.0	138.9	172.6
1/21/08 12:11	58,299,606	4,848,026	45,309	175.3	210.4	177.7
1/23/08 13:08	58,816,485	5,364,905	50,139	177.6	176.0	177.5
1/25/08 10:07	59,295,449	5,843,869	54,616	178.4	177.5	177.5
1/28/08 12:31	60,084,950	6,633,370	61,994	176.4	176.9	177.4
1/30/08 8:07	60,546,154	7,094,574	66,304	178.0	176.3	177.3
2/1/08 7:55	61,056,514	7,604,934	71,074	175.9	177.9	177.4
2/4/08 10:04	61,846,550	8,394,970	78,458	178.3	177.6	177.4
2/6/08 8:37	62,339,680	8,888,100	83,066	177.2	176.6	177.4
2/8/08 9:43	62,861,482	9,409,902	87,943	175.4	177.1	177.3
2/11/08 11:52	63,652,454	10,200,874	95,335	183.6	177.8	177.4
2/13/08 8:57	64,162,254	10,710,674	100,100	188.2	188.5	177.9
2/15/08 13:47	64,733,418	11,281,838	105,438	178.2	180.2	178.0
2/18/08 11:16	65,488,412	12,036,832	112,494	180.1	181.1	178.2
2/20/08 12:54	66,022,714	12,571,134	117,487	180.7	179.4	178.2
2/22/08 10:05	66,509,392	13,057,812	122,036	180.2	179.5	178.3
2/25/08 11:53	67,308,451	13,856,871	129,503	179.8	180.5	178.4
2/27/08 8:40	67,792,544	14,340,964	134,028	179.7	180.2	178.5
2/29/08 12:52	68,353,525	14,901,945	139,271	180.1	179.1	178.5
3/3/08 13:45	69,141,915	15,690,335	146,639	178.4	180.3	178.6
3/5/08 8:11	69,596,794	16,145,214	150,890	179.7	178.7	178.6
3/7/08 13:22	70,164,242	16,712,662	156,193	179.6	177.8	178.6
3/10/08 9:20	70,885,583	17,434,003	162,935	177.5	176.9	178.5
3/12/08 10:04	71,407,942	17,956,362	167,816	175.1	178.6	178.5
3/14/08 9:09	71,912,232	18,460,652	172,529	175.3	178.5	178.5
3/17/08 11:17	72,707,155	19,255,575	179,959	178.6	178.7	178.5
3/19/08 12:24	73,233,240	19,781,660	184,875	179.8	178.5	178.5
3/21/08 14:19	73,770,687	20,319,107	189,898	177.7	179.4	178.5
3/24/08 11:14	74,509,699	21,058,119	196,805	177.9	178.7	178.5
3/26/08 11:23	75,040,644	21,589,064	201,767	180.8	183.8	178.7
3/28/08 11:00	75,566,455	22,114,875	206,681	183.5	184.0	178.8
3/31/08 11:33	76,367,934	22,916,354	214,172	185.6	184.1	179.0
4/2/08 11:10	76,888,900	23,437,320	219,040	178.8	182.3	179.0
4/4/08 10:44	77,373,018	23,921,438	223,565	175.9	169.6	178.8
4/7/08 11:05	78,105,997	24,654,417	230,415	168.4	168.9	178.5

4/9/08 13:36	78,621,470	25,169,890	235,233	170.5	170.1	178.3
4/11/08 11:48	79,094,806	25,643,226	239,656	171.0	170.8	178.2
4/14/08 12:43	79,841,964	26,390,384	246,639	169.3	170.8	178.0
4/16/08 13:06	80,362,109	26,910,529	251,500	176.5	179.2	178.0
4/18/08 14:01	80,852,936	27,401,356	256,087	165.0	167.2	177.8
4/25/08 14:28	80,959,430	27,507,850	257,083	19.0	10.5	167.5

Date / Time	Meter Volume (Gallons)	Meter Volume Treated (Gallons)	Meter Volume Treated (BVs)	Meter Flow Rate (GPM)	Period Meter Flow Rate (GPM)	Average Meter Flow Rate (GPM)
7/24/08 11:30	82,527,757	29,076,177	0	175.6	--	--
7/24/08 12:46	82,540,978	13,221	124	175.6	174.0	174.0
7/28/08 9:49	83,498,574	970,817	9,073	162.3	171.5	171.6
7/31/08 11:43	84,293,595	1,765,838	16,503	181.1	179.3	175.0
8/4/08 8:58	85,261,429	2,733,672	25,548	172.6	173.0	174.3
8/7/08 8:41	86,013,314	3,485,557	32,575	173.5	174.7	174.4
8/11/08 10:13	87,037,697	4,509,940	42,149	175.3	175.0	174.5
8/14/08 12:09	87,815,064	5,287,307	49,414	175.4	175.6	174.7
8/18/08 9:51	88,799,496	6,271,739	58,614	175.2	175.1	174.7
8/21/08 11:42	89,578,254	7,050,497	65,892	175.6	175.8	174.9
8/25/08 8:22	90,553,869	8,026,112	75,010	174.9	175.5	174.9
8/28/08 11:26	91,344,971	8,817,214	82,404	175.6	175.6	175.0
9/2/08 10:46	92,603,053	10,075,296	94,162	175.0	175.7	175.1
9/4/08 9:35	93,096,479	10,568,722	98,773	169.5	175.7	175.1
9/11/08 7:18	94,878,100	12,350,343	115,424	173.7	179.2	175.7
9/18/08 11:53	96,682,357	14,154,600	132,286	176.8	174.2	175.5
9/25/08 7:02	98,390,494	15,862,737	148,250	171.8	174.5	175.4
10/2/08 9:27	100,160,725	17,632,968	164,794	174.2	173.1	175.2
10/9/08 10:08	101,916,988	19,389,231	181,208	173.7	173.5	175.0
10/16/08 12:45	102,625,484	20,097,727	187,829	0.0	172.1	174.9
10/24/08 11:40	104,365,708	21,837,951	204,093	176.8	173.8	174.8
10/30/08 9:54	105,895,937	23,368,180	218,394	176.5	179.3	175.1
11/6/08 9:54	107,633,800	25,106,043	234,636	175.4	172.4	174.9
11/13/08 10:26	109,398,962	26,871,205	251,133	175.9	174.6	174.9
11/21/08 11:00	110,712,391	28,184,634	263,408	0.0	178.0	175.0
11/25/08 13:39	110,722,681	28,194,924	263,504	177.1	171.5	175.0
12/4/08 11:19	112,978,225	30,450,468	284,584	175.3	175.9	175.1
12/11/08 9:30	114,476,720	31,948,963	298,588	0.0	175.7	175.1

Date / Time	Comments
1/17/07 14:50	
1/18/07 12:42	System Startup, NDMA sampling, Monthly sampling
1/20/07 8:15	Set backpressure regulator. Set pre-filter backwash at 10 PSID
1/23/07 11:30	Adjusted flow-rate to 150 GPM. Reset pre-filter backwash set point to 7 PSID
1/24/07 11:15	Weekly sampling, adjusted flow rate
1/26/07 9:15	F-17B Nitrate 31.8 mg/L
1/31/07 11:20	Performed every-other week sampling
2/2/07 9:00	Increased flow rate form 148 to 150 GPM. F-17B Nitrate 32.0 mg/L
2/5/07 11:02	F-17B Nitrate 32.3 mg/L
2/7/07 9:45	No air at top of IX vessel
2/12/07 9:45	Decreased system flow rate. F-17B Nitrate 30.8
2/14/07 9:45	Performed every-other week sampling
2/14/07 12:10	Volume at time of Sampling
2/16/07 9:00	F-17B Nitrate 32.2 mg/L
2/16/07 11:43	
2/21/07 9:13	FWC Treatment system down since 8:20 2/19/07
2/22/07 12:37	Performed monthly sampling. System shut off at 14:47 because of nitrate spike.
2/28/07 10:59	Performed every-other week sampling with duplicates and blanks. F-17B Nitrate 31.7 mg/L
3/7/07 10:11	Performed weekly sampling, manually backwashed pre-filter. F-17B Nitrate 32.2 mg/L
3/14/07 9:57	Performed every-other week sampling, manually backwashed pre-filter. F-17B Nitrate 33.7 mg/L
3/21/07 10:49	Performed monthly sampling. Nitrate (mg/L): F-17B @ 34.7, F-17C @ 31.7
3/28/07 10:13	Performed every-other week sampling, manually backwashed pre-filter
3/29/07 10:30	Manually backwashed pre-filter, adjusted flow rate
4/4/07 10:32	Performed weekly sampling, manually backwashed pre-filter. Nitrate (mg/L): F-17B @ 35.5, F-17C @ 32.3
4/11/07 10:20	Performed every-other week sampling, manually backwashed pre-filter. Nitrate (mg/L): F-17B @ 35.6, F-17C @ 32.3
4/18/07 9:05	Performed weekly sampling, backwashed pre-filter. Nitrate (mg/L): F-17B @ 35.7, F-17C @ 32.2
4/25/07 11:23	Performed every-week sampling with duplicates and trip blanks. Nitrate (mg/L): F-17B @ 36.1, F-17C @ 32.6
5/2/07 10:34	Performed weekly sampling, backwashed pre-filter. Nitrate (mg/L): F-17B @ 36.1, F-17C @ 32.7
5/9/07 10:00	Performed every-other week sampling, backwashed pre-filter.
5/16/07 11:52	Performed weekly sampling, backwashed pre-filter, reset pre-filter DP alarm
5/23/07 11:24	Performed monthly and every-other week sampling. Nitrate (mg/L): F-17B @ 32.0, F-17C @ 33.7
5/30/07 11:08	Performed weekly sampling, backwashed pre-filter, adjusted flor rate. Nitrate (mg/L): F-17B @ 32.1, F-17C @ 33.9
6/8/07 11:08	Performed every-other week sampling, backwashed pre-filter, shut system off pending shipment to Calgon

Date / Time	Comments
8/10/07 16:20	Re-started IX system. Collected start-up samples
8/10/07 16:45	Shut down system because of major hose leak
8/20/07 15:00	Repaired hose leak. Restarted IX system
8/31/07 9:22	Performed weekly sampling, including total and dissolved iron
8/31/07 13:12	Confirm flow rate setting
9/4/07 11:01	Monitored system. Nitrate (mg/L): F-17B @ 38.5, F-17C @ 36.8
9/5/07 10:16	Performed every-other week sampling, including total and dissolved iron. Nitrate (mg/L): F-17B @ 36.8, F-17C @ 38.5
9/6/07 8:18	Monitored system. Nitrate (mg/L): F-17B @ 36.9, F-17C @ 35.2
9/7/07 12:56	Monitored system. Nitrate (mg/L): F-17B @ 37.3, F-17C @ 32.2
9/10/07 18:44	Monitored system. Nitrate (mg/L): F-17B @ 36.9, F-17C @ 33.2
9/12/07 12:55	Performed weekly monitoring, including total and dissolved iron. Nitrate (mg/L): F-17B @ 37.5, F-17C @ 33.1
9/14/07 11:27	Monitored system. Nitrate (mg/L): F-17B @ 36.9, F-17C @ 33.2
9/17/07 11:56	Monitored system. Nitrate (mg/L): F-17B @ 38.0, F-17C @ 32.8
9/18/07 13:04	Monitored system. Nitrate (mg/L): F-17B @ 38.2, F-17C @ 36.5
9/19/07 12:45	Performed monthly and every-other week sampling. Nitrate (mg/L): F-17B @ 38.3, F-17C @ 36.5
9/21/07 10:50	Monitored system. Increased flowrate from 153.0 GPM to 160.2 GPM. Nitrate (mg/L): F-17B @ 36.2, F-17C @ 36.8
9/24/07 14:20	Monitored system. Nitrate (mg/L): F-17B @ 37.5, F-17C @ 37.4
9/26/07 13:55	Re-Started system. Performed weekly monitoring. Nitrate (mg/L): F-17B @ 36.9, F-17C @ 37.2
9/28/07 13:51	Re-started and monitored system. Nitrate (mg/L): F-17B @ 36.3, F-17C @ 36.7
10/1/07 14:42	Monitored system. Nitrate (mg/L): F-17B @ 37.0, F-17C @ 37.0
10/3/07 12:50	Performed every-other week monitoring. Nitrate (mg/L): F-17B @ 36.6, F-17C @ 36.6
10/5/07 12:34	Monitored system. Nitrate (mg/L): F-17B @ 36.8, F-17C @ 37.0
10/8/07 11:21	Monitored system. Nitrate (mg/L): F-17B @ 37.0, F-17C @ 36.7
10/10/07 15:49	Performed weekly monitoring. Nitrate (mg/L): F-17B @ 36.8, F-17C @ 36.6
10/12/07 9:35	Monitored system. Nitrate (mg/L): F-17B @ 36.8, F-17C @ 36.3
10/15/07 13:13	Monitored system. Nitrate (mg/L): F-17B @ 36.5, F-17C @ 36.6
10/17/07 13:05	Performed monthly monitoring. Nitrate (mg/L): F-17B @ 36.6, F-17C @ 36.6
10/19/07 9:44	Monitored system. Obtained TDS MS/MSD sample. Obtained radon samples. Nitrate (mg/L): F-17B @ 36.8, F-17C @ 37.1
10/22/07 12:19	Monitored system. Nitrate (mg/L): F-17B @ 37.5, F-17C @ 36.7
10/24/07 13:54	Performed weekly monitoring. Nitrate (mg/L): F-17B @ 37.4, F-17C @ 37.7
10/26/07 13:14	Monitored system. Nitrate (mg/L): F-17B @ 36.7, F-17C @ 38.3
10/29/07 13:08	Monitored system. Nitrate (mg/L): F-17B @ 37.0, F-17C @ 38.3
10/31/07 11:33	Performed every-other week monitoring. Nitrate (mg/L): F-17B @ 37.0, F-17C @ 38.1
11/2/07 10:40	Monitored system. Reduced flow rate from 190.2 to 179.0 GPM. Nitrate (mg/L): F-17B @ 37.0, F-17C @ 35.4
11/5/07 10:42	Monitored system. Reduced flow rate from 183.7 to 175.0 GPM. Nitrate (mg/L): F-17B @ 37.0, F-17C @ 35.0
11/7/07 9:05	Monitored system. Nitrate (mg/L): F-17C @ 35.5
11/9/07 7:38	Performed weekly monitoring. Nitrate (mg/L): F-17C @ 38.2

11/12/07 13:04	Monitored system. Nitrate (mg/L): F-17C @ 38.1
11/14/07 12:30	Performed monthly monitoring. Nitrate (mg/L): F-17C @ 37.9
11/16/07 12:58	Monitored system. Nitrate (mg/L): F-17C @ 37.7
11/19/07 11:23	Monitored system. Increased flow rate from 152.7 to 167.0 GPM. Nitrate (mg/L): F-17C @ 37.6
11/21/07 11:27	Monitored system. Nitrate (mg/L): F-17C @ 37.3
11/23/07 12:08	Monitored system. Nitrate (mg/L): F-17C @ 37.3
11/26/07 11:25	Start dismantling IX @ 12:28. Nitrate (mg/L): F-17C @ 37.3

Date / Time	Comments
1/2/08 11:36	Re-started IX system. Collected start-up samples. Nitrate (mg/L): F-17C @ 37.3
1/2/08 13:47	Water coming out of top of IX vessel. Change flow rate to 175.0 GPM
1/4/08 10:51	Collected VOC samples. Water coming out of top of IX vessel. Nitrate (mg/L): F-17C @ 37.5
1/7/08 13:03	Monitored system. Nitrate (mg/L): F-17C @ 37.2
1/9/08 12:33	Performed weekly sampling. Nitrate (mg/L): F-17C @ 37.3
1/10/08 7:52	Monitored system.
1/11/08 12:17	Monitored system. Nitrate (mg/L): F-17C @ 37.5
1/14/08 14:50	Monitored system. Nitrate (mg/L): F-17C @ 37.6
1/16/08 14:15	Performed every-other week sampling. Nitrate (mg/L): F-17C @ 37.2
1/18/08 23:14	Monitored system. Nitrate (mg/L): F-17C @ 37.3
1/21/08 12:11	Monitored system. Nitrate (mg/L): F-17C @ 37.3
1/23/08 13:08	Performed weekly sampling. Nitrate (mg/L): F-17C @ 37.3
1/25/08 10:07	Monitored system. Nitrate (mg/L): F-17C @ 37.3
1/28/08 12:31	Monitored system. Nitrate (mg/L): F-17C @ 37.2
1/30/08 8:07	Performed monthly sampling. Nitrate (mg/L): F-17C @ 37.2
2/1/08 7:55	Monitored system. Nitrate (mg/L): F-17C @ 37.2
2/4/08 10:04	Performed weekly sampling. Nitrate (mg/L): F-17C @ 37.6
2/6/08 8:37	Monitored system. Nitrate (mg/L): F-17C @ 38.1
2/8/08 9:43	Monitored system. Nitrate (mg/L): F-17C @ 37.6
2/11/08 11:52	Performed weekly sampling. Nitrate (mg/L): F-17C @ 37.6
2/13/08 8:57	Monitored system. Decreased flow rate from 188.2 to 178.8 GPM. Nitrate (mg/L): F-17C @ 37.5
2/15/08 13:47	Monitored system. Nitrate (mg/L): F-17C @ 37.3
2/18/08 11:16	Performed weekly sampling. Nitrate (mg/L): F-17C @ 37.3
2/20/08 12:54	Monitored system. Nitrate (mg/L): F-17C @ 37.2
2/22/08 10:05	Monitored system. Nitrate (mg/L): F-17C @ 37.1
2/25/08 11:53	Monitored system. Nitrate (mg/L): F-17C @ 37.1
2/27/08 8:40	Performed monthly sampling. Nitrate (mg/L): F-17C @ 37.2
2/29/08 12:52	Monitored system. Nitrate (mg/L): F-17C @ 37.2
3/3/08 13:45	Performed weekly sampling. Nitrate (mg/L): F-17C @ 37.3
3/5/08 8:11	Monitored system. Nitrate (mg/L): F-17C @ 37.1
3/7/08 13:22	Monitored system. Nitrate (mg/L): F-17C @ 37.3
3/10/08 9:20	Monitored system. Nitrate (mg/L): F-17C @ 37.1
3/12/08 10:04	Performed weekly sampling. Nitrate (mg/L): F-17C @ 37.1

3/14/08 9:09	Monitored system. Nitrate (mg/L): F-17C @ 37.1
3/17/08 11:17	Performed weekly sampling. Nitrate (mg/L): F-17C @ 37.1
3/19/08 12:24	Monitored system. Nitrate (mg/L): F-17C @ 37.1
3/21/08 14:19	Monitored system. Nitrate (mg/L): F-17C @ 37.2
3/24/08 11:14	Monitored system. Nitrate (mg/L): F-17C @ 37.1
3/26/08 11:23	Monitored system. Nitrate (mg/L): F-17C @ 37.1
3/28/08 11:00	Performed monthly sampling. Nitrate (mg/L): F-17C @ 37.0
3/31/08 11:33	Performed weekly sampling. Nitrate (mg/L): F-17C @ 36.8
4/2/08 11:10	Monitored system. Nitrate (mg/L): F-17C @ 36.7
4/4/08 10:44	Monitored system. Nitrate (mg/L): F-17C @ 36.7
4/7/08 11:05	Performed weekly sampling. Nitrate (mg/L): F-17C @ 36.7
4/9/08 13:36	Monitored system. Nitrate (mg/L): F-17C @ 36.8
4/11/08 11:48	Monitored system. Nitrate (mg/L): F-17C @ 37.1
4/14/08 12:43	Performed weekly sampling. Increased flow rate form 169 to 178 GPM. Nitrate (mg/L): F-17C @ 37.6
4/16/08 13:06	Monitored system. Nitrate (mg/L): F-17C @ 37.2
4/18/08 14:01	Reduce flow to system to 8 - 12.5 GPM. Get Resin sample. Nitrate (mg/L): F-17C @ 37.3
4/25/08 14:28	Nitrate (mg/L): F-17C @ 37.3

Date / Time	Comments
7/24/08 11:30	Re-started IX system.
7/24/08 12:46	Collected start-up samples. Nitrate (mg/L): F-17C @ 38.5
7/28/08 9:49	Collected TCE and Nitrosamines samples. Increased flow rate from 163 to 175 GPM.
7/31/08 11:43	Performed weekly sampling. Decreased flow rate form 181 to 176 GPM. Nitrate (mg/L): F-17C @ 37.9
8/4/08 8:58	Monitored system. Increased flow rate from 173 to 176 GPM. Nitrate (mg/L): F-17C @ 38.4
8/7/08 8:41	Performed Every-other week sampling. Increased flow rate from 173 to 175 GPM. Nitrate (mg/L): F-17C @ 37.8
8/11/08 10:13	Monitored system. Nitrate (mg/L): F-17C @ 37.9
8/14/08 12:09	Performed weekly sampling. Replaced IX Influent pressure gauge. Nitrate (mg/L): F-17C @ 38.8
8/18/08 9:51	Monitored system. Nitrate (mg/L): F-17C @ 38.8
8/21/08 11:42	Performed monthly sampling. Nitrate (mg/L): F-17C @ 39.2
8/25/08 8:22	Monitored system. Nitrate (mg/L): F-17C @ 39.2
8/28/08 11:26	Performed weekly sampling. Nitrate (mg/L): F-17C @ 39.7
9/2/08 10:46	Monitored system. Nitrate (mg/L): F-17C @ 38.2
9/4/08 9:35	Performed Every-other week sampling. Increased flow rate from 169.5 to 175.5 GPM. Nitrate (mg/L): F-17C @ 38.2
9/11/08 7:18	Performed weekly sampling. Nitrate (mg/L): F-17C @ 38.8
9/18/08 11:53	Performed monthly sampling. Nitrate (mg/L): F-17C @ 39.1
9/25/08 7:02	Performed weekly sampling. Nitrate (mg/L): F-17C @ 38.4
10/2/08 9:27	Performed Every-other week sampling. Nitrate (mg/L): F-17C @ 38.6
10/9/08 10:08	Performed weekly sampling. Nitrate (mg/L): F-17C @ 38.4

10/16/08 12:45	Well F-17C shutdown because of high Nitrate. System not running.
10/24/08 11:40	Well F-17B started back up on 10/17/08. Performed monthly sampling. Nitrate (mg/L): F-17B @ 36.7
10/30/08 9:54	Performed weekly sampling. Nitrate (mg/L): F-17B @ 35.8
11/6/08 9:54	Performed Every-other week sampling. Nitrate (mg/L): F-17B @ 31.9
11/13/08 10:26	Performed weekly sampling. Nitrate (mg/L): F-17B @ 34.3
11/21/08 11:00	System shutdown by Fontana Water personnel on 11/18/08 because of broken valve. Assess what repairs will be needed.
11/25/08 13:39	Restarted system at 1236. Performed monthly sampling. Nitrate (mg/L): F-17B @ 38.4
12/4/08 11:19	Performed weekly sampling. Nitrate (mg/L): F-17B @ 38.9
12/11/08 9:30	Well F17B shutdown at approximately 09:30 12/10/08 because Fontana Water Resin in lead and lag beds was saturated.

Appendix C2: IX Analytical Data

Influent Data

Date / Time	Number of Bed Volumes	Perchlorate by Weck	Perchlorate by STL	Nitrate as NO3	Sulfate as SO4	pH	TDS	TOC	Chloride	Fluoride	Alkalinity as CaCO3	Alkalinity as HCO3
Unit:	**(BVs)**	ug/l	ug/l	mg/l	mg/l	s.u.	mg/l	mg/l	mg/l	mg/l	mg/l	mg/l
1/17/07 15:30												
1/17/07 15:31	2.6											
1/17/07 15:32	4.8											
1/17/07 15:34	6.9											
1/17/07 15:35	10											
1/17/07 15:39	17											
1/17/07 15:51	26											
1/17/07 16:01	39											
1/17/07 16:01	39	8.5	9.7	31	16	7.98	230	ND	12	0.19		
1/18/07 12:42	1,551											
1/20/07 8:15	4,994											
1/23/07 11:30	10,739											
1/24/07 11:15	12,607	9.9		31	18	7.98	180	ND				
1/26/07 9:15	16,068											
1/31/07 11:20	25,231	9.5		33	15	8.15	190	ND	11	0.12		
1/31/07 11:20	25,231	9.4		33	15	7.95	170		11	0.13		
2/2/07 9:00	28,742											
2/5/07 11:02	34,468											
2/7/07 9:45	38,173	11		31	15	7.91	220	ND				
2/12/07 9:45	47,327											
2/14/07 9:45	51,159	7		32	15	7.76	280	ND	11	0.17		
2/21/07 9:13	60,236	7.6		29	17	7.9	240	<0.3				
2/22/07 12:37	62,084											
2/28/07 10:59	71,248	7.7		33	16	7.82	260	ND	11	0.16		
3/7/07 10:11	84,060	7.1		32	16	7.88	250	ND				
3/14/07 9:57	96,689	9.5		32	16	7.85	220	ND	11	0.16		
3/21/07 10:49	109,950	7.4		33	16	7.73	240	ND			150	180
3/28/07 10:13	122,719	8.7	8.7	31	15	7.81	240	ND	11	0.17		
3/29/07 10:30	124,715											
4/4/07 10:32	137,137	6.6		32	15	7.73	230	ND				
4/11/07 10:20	151,169	6.1		31	14	7.70	250	ND	12	0.16		
4/18/07 9:05	164,846	6.7		32	15	7.61	300	ND				
4/25/07 11:23	178,890	7.5		32	15	7.16	240	ND	12			200
4/25/07 11:23	178,890	7.6		32	15	7.18	250	0.52	12			210
5/2/07 10:34	193,212	7.8		32	15	7.56	200	ND				
5/9/07 10:00	207,542	8.2		33	15	7.40	210	ND	12	0.17		
5/16/07 11:52	219,846	6.8		33	16	7.97	280	ND				

Date / Time	Number of Bed Volumes	Perchlorate by Weck	Perchlorate by STL	Nitrate as NO3	Sulfate as SO4	pH	TDS	TOC	Chloride	Fluoride	Alkalinity as CaCO3	Alkalinity as HCO3
Unit:	**(BVs)**	ug/l	ug/l	mg/l	mg/l	s.u.	mg/l	mg/l	mg/l	mg/l	mg/l	mg/l
5/23/07 11:24	234,143	7.3		34	16	8	170	ND	12	0.18		
5/30/07 11:08	249,116	6.9		35	16	8.03	160	2.9				
5/30/07 11:08	249,116	7.1		34	16	8.04	180	ND				
6/8/07 11:08	267,967	7.4		35	15	7.96	230	ND	12	0.19		
8/10/07 16:45	0	7.7		37	17	7.98	260	ND	13	0.17		190
8/31/07 13:05	20,252	7.2		38	17	7.93	270	ND				
8/31/07 13:05	20,252	7.9		38	17	7.88	270	ND				
9/5/07 10:16	30,295	6.7		38	17	8.59	290	ND	13	0.15		
9/12/07 14:25	44,970	6.4		39	17	8.05	300	ND				
9/19/07 12:45	59,218	5.0		39	17	8.06	290	ND	13	0.19		
9/26/07 13:55	71,408	11.0		38	17	8.06	310	ND				
10/3/07 12:50	83,238	7.7		39	17	7.91	250	ND	13	0.17		
10/10/07 15:49	99,295	7.5		37	17	7.92	260					
10/10/07 15:49	99,295	7.2		37	17	7.93	260					
10/17/07 13:05	114,929	7.9		37	17	8.05	240	ND	13	0.17		
10/19/07 9:44	119,160											
10/24/07 13:54	131,148	7.9		37	17	7.94	280	0.3				
10/24/07 13:54	131,148	7.4		37	17	7.96	290	0.36				
10/31/07 11:33	147,346	7.9		36	17	7.93	330	8	12	0.18		
11/9/07 7:38	166,760	5.1		37	16	8.00	320	ND				
11/14/07 12:30	177,050	6.7		37	16	7.98	310	ND	13	0.2		
11/14/07 12:30	177,050								13	0.21		
11/21/07 11:27	191,103	7.3		39	17	7.97	330	ND				
11/26/07 11:25	201,942	7.7		37	16	8.05	310	ND	13	0.19		
1/2/08 13:47	0	6.9		38	17	7.93	260	ND	13	0.17		
1/2/08 13:52	9											
1/2/08 13:57	18											
1/2/08 14:17	55											
1/4/08 10:51	4,784											
1/9/08 12:33	16,991	7.8		38	17	7.91	280	ND				
1/9/08 12:33	16,991	5.7						ND				
1/16/08 14:15	33,680	8.3		38	17	7.90	280	ND	13	0.16		
1/23/08 13:08	50,139	7.6										
1/23/08 13:08	50,139	7.9										
1/30/08 8:07	66,304	9.3		37	17	7.83	270	ND	13	0.18		
2/4/08 10:04	78,458	7.7										
2/11/08 11:52	95,335	7.9										
2/15/08 13:47	105,438		6.3									
2/20/08 12:54	117,487	8.8										
2/22/08 10:05	122,036											

Date / Time	Number of Bed Volumes	Perchlorate by Weck	Perchlorate by STL	Nitrate as NO3	Sulfate as SO4	pH	TDS	TOC	Chloride	Fluoride	Alkalinity as CaCO3	Alkalinity as HCO3
Unit:	**(BVs)**	ug/l	ug/l	mg/l	mg/l	s.u.	mg/l	mg/l	mg/l	mg/l	mg/l	mg/l
2/27/08 8:40	134,028	8.8		38	19	7.35	260	ND	14	0.2		
2/27/08 8:40	134,028			38	17	7.90	260	ND				
3/3/08 13:45	146,639	8.0										
3/3/08 13:45	146,639											
3/12/08 10:04	167,816	9.5										
3/17/08 11:17	179,959	8.8										
3/28/08 11:00	206,681	9.4		37	17	7.94	250	ND	13	0.18		
3/28/08 11:00	206,681								13	0.18		
3/31/08 11:33	214,172	8.2										
3/31/08 11:33	214,172											
4/7/08 11:05	230,415	8.9										
4/14/08 12:43	246,639	7.1										
7/24/08 11:30	0	7.3		38	17	8.03	250	ND	13	0.18		
7/24/08 11:35												
7/24/08 11:50												
7/28/08 9:49	9,073											
7/31/08 11:43	16,503	ND		37	17	7.88	300	ND				
8/7/08 8:41	32,575	7.6		39	17	7.89	280	ND				
8/7/08 8:41	32,575	7.6										
8/14/08 12:09	49,414	7.5										
8/21/08 11:42	65,892	7.4		40	18	7.85	250	ND	14	0.19		
8/28/08 11:26	82,404	7.8										
9/4/08 9:35	98,773	7.2										
9/11/08 7:18	115,424	8.0										
9/11/08 7:18	115,424	7.4										
9/18/08 11:53	132,286	8.1		37	16	7.93	300	ND	13	0.18		
9/25/08 7:02	148,250	8.6										
9/25/08 7:02	148,250	8.2										
10/2/08 9:27	164,794	8.3										
10/2/08 9:27	164,794											
10/9/08 10:08	181,208	7.3										
10/9/08 10:08	181,208											
10/24/08 11:40	204,093	11		35	17	7.88	260	ND	12	0.18		
10/24/08 11:40	204,093											
10/30/08 9:54	218,394	11										
11/6/08 9:54	234,636	9.9										
11/13/08 10:26	251,133	9.2										
11/25/08 13:39	263,504	11		38	17	7.96	270	ND	12	0.19		
11/25/08 13:39	263,504											
12/4/08 11:19	284,584	9.9										

Influent Nitrosamine Data

Date / Time	Number of Bed Volumes	N-Nitrosodimethylamine	N-Nitrosomethylethylamine	N-Nitrosodiethylamine	N-Nitrosodi-n-propylamine	N-Nitrosomorpholine	N-Nitrosopyrrolidine	N-Nitrosopiperidine	N-Nitrosodi-n-butylamine
Unit:	**(BVs)**	ng/l	ng/l	ng/l	ng/l	ng/l	ng/l	ng/l	ng/l
1/17/07 15:30									
1/17/07 15:31	2.6								
1/17/07 15:32	4.8								
1/17/07 15:34	6.9								
1/17/07 15:35	10								
1/17/07 15:39	17								
1/17/07 15:51	26								
1/17/07 16:01	39								
1/17/07 16:01	39	11	<2.0	<2.0	<2.0	<2.0	<2.0	<2.0	<2.0
1/18/07 12:42	1,551								
1/20/07 8:15	4,994								
1/23/07 11:30	10,739								
1/24/07 11:15	12,607								
1/26/07 9:15	16,068								
1/31/07 11:20	25,231	<2.0	<2.0	<2.0	<2.0	<2.0	<2.0	<2.0	<2.0
1/31/07 11:20	25,231								
2/2/07 9:00	28,742								
2/5/07 11:02	34,468								
2/7/07 9:45	38,173								
2/12/07 9:45	47,327								
2/14/07 9:45	51,159	<2.0	<2.0	<2.0	<2.0	<2.0	<2.0	<2.0	<2.0
2/21/07 9:13	60,236								
2/22/07 12:37	62,084								
2/28/07 10:59	71,248	<2.0	<2.0	<2.0	<2.0	<2.0	<2.0	<2.0	<2.0
3/7/07 10:11	84,060								
3/14/07 9:57	96,689	<2.0	<2.0	<2.0	<2.0	<2.0	<2.0	<2.0	<2.0
3/21/07 10:49	109,950								
3/28/07 10:13	122,719	<2.0	<2.0	<2.0	<2.0	<2.0	<2.0	<2.0	<2.0
3/29/07 10:30	124,715								
4/4/07 10:32	137,137								
4/11/07 10:20	151,169	<2.0	<2.0	<2.0	<2.0	<2.0	<2.0	<2.0	<2.0
4/18/07 9:05	164,846								
4/25/07 11:23	178,890	<2.0	<2.0	<2.0	<2.0	<2.0	<2.0	<2.0	<2.0
4/25/07 11:23	178,890	<2.0	<2.0	<2.0	<2.0	<2.0	<2.0	<2.0	<2.0
5/2/07 10:34	193,212								
5/9/07 10:00	207,542	<2.0	<2.0	<2.0	<2.0	<2.0	<2.0	<2.0	<2.0
5/16/07 11:52	219,846								

Date / Time	Number of Bed Volumes	N-Nitrosodimethylamine	N-Nitrosomethylethylamine	N-Nitrosodiethylamine	N-Nitrosodi-n-propylamine	N-Nitrosomorpholine	N-Nitrosopyrrolidine	N-Nitrosopiperidine	N-Nitrosodi-n-butylamine
Unit:	**(BVs)**	ng/l	ng/l	ng/l	ng/l	ng/l	ng/l	ng/l	ng/l
5/23/07 11:24	234,143	<2.0	<2.0	<2.0	<2.0	<2.0	<2.0	<2.0	<2.0
5/30/07 11:08	249,116								
5/30/07 11:08	249,116								
6/8/07 11:08	267,967	<2.0	<2.0	<2.0	<2.0	<2.0	<2.0	<2.0	<2.0
8/10/07 16:45	0	<2.0	<2.0	<2.0	<2.0	<2.0	<2.0	<2.0	<2.0
8/31/07 13:05	20,252								
8/31/07 13:05	20,252								
9/5/07 10:16	30,295	<2.0	<2.0	<2.0	<2.0	<2.0	<2.0	<2.0	<2.0
9/12/07 14:25	44,970								
9/19/07 12:45	59,218	<2.0	<2.0	<2.0	<2.0	<2.0	<2.0	<2.0	<2.0
9/26/07 13:55	71,408								
10/3/07 12:50	83,238	<2.0	<2.0	<2.0	<2.0	<2.0	<2.0	<2.0	<2.0
10/10/07 15:49	99,295								
10/10/07 15:49	99,295								
10/17/07 13:05	114,929	<2.0	<2.0	<2.0	<2.0	<2.0	<2.0	<2.0	<2.0
10/19/07 9:44	119,160								
10/24/07 13:54	131,148								
10/24/07 13:54	131,148								
10/31/07 11:33	147,346	<2.0	<2.0	<2.0	<2.0	<2.0	<2.0	<2.0	<2.0
11/9/07 7:38	166,760								
11/14/07 12:30	177,050	<2.0	<2.0	<2.0	<2.0	<2.0	<2.0	<2.0	<2.0
11/14/07 12:30	177,050	<2.0	<2.0	<2.0	<2.0	<2.0	<2.0	<2.0	<2.0
11/21/07 11:27	191,103								
11/26/07 11:25	201,942	<2.0	<2.0	<2.0	<2.0	<2.0	<2.0	<2.0	<2.0
1/2/08 13:47	0	<2.0	<2.0	<2.0	<2.0	<2.0	<2.0	<2.0	<2.0
1/2/08 13:52	9								
1/2/08 13:57	18								
1/2/08 14:17	55								
1/4/08 10:51	4,784								
1/9/08 12:33	16,991								
1/9/08 12:33	16,991								
1/16/08 14:15	33,680	<2.0	<2.0	<2.0	<2.0	<2.0	<2.0	<2.0	<2.0
1/23/08 13:08	50,139								
1/23/08 13:08	50,139								
1/30/08 8:07	66,304	<2.0	<2.0	<2.0	<2.0	<2.0	<2.0	<2.0	<2.0
2/4/08 10:04	78,458								
2/11/08 11:52	95,335								
2/15/08 13:47	105,438								
2/20/08 12:54	117,487								
2/22/08 10:05	122,036								

Date / Time	Number of Bed Volumes	N-Nitrosodimethylamine	N-Nitrosomethylethylamine	N-Nitrosodiethylamine	N-Nitrosodi-n-propylamine	N-Nitrosomorpholine	N-Nitrosopyrrolidine	N-Nitrosopiperidine	N-Nitrosodi-n-butylamine
Unit:	**(BVs)**	ng/l	ng/l	ng/l	ng/l	ng/l	ng/l	ng/l	ng/l
2/27/08 8:40	134,028	**32**	<2.0	<2.0	<2.0	<2.0	<2.0	<2.0	<2.0
2/27/08 8:40	134,028								
3/3/08 13:45	146,639								
3/3/08 13:45	146,639								
3/12/08 10:04	167,816								
3/17/08 11:17	179,959								
3/28/08 11:00	206,681	**3.8**	<2.0	<2.0	<2.0	**8.8**	<2.0	<2.0	<2.0
3/28/08 11:00	206,681	**2.4**	<2.0	<2.0	<2.0	**9.6**	<2.0	<2.0	<2.0
3/31/08 11:33	214,172								
3/31/08 11:33	214,172								
4/7/08 11:05	230,415								
4/14/08 12:43	246,639								
7/24/08 11:30	0	<2.0	<2.0	<2.0	<2.0	<2.0	<2.0	<2.0	**2.0**
7/24/08 11:35		<2.0	<2.0	<2.0	<2.0	<2.0	<2.0	<2.0	<2.0
7/24/08 11:50									
7/28/08 9:49	9,073								
7/31/08 11:43	16,503								
8/7/08 8:41	32,575	<2.0	<2.0	<2.0	<2.0	<2.0	<2.0	<2.0	<2.0
8/7/08 8:41	32,575								
8/14/08 12:09	49,414								
8/21/08 11:42	65,892	<2.0	<2.0	<2.0	<2.0	<2.0	<2.0	<2.0	<2.0
8/28/08 11:26	82,404								
9/4/08 9:35	98,773	<2.0	<2.0	<2.0	<2.0	<2.0	<2.0	<2.0	<2.0
9/11/08 7:18	115,424								
9/11/08 7:18	115,424								
9/18/08 11:53	132,286	<2.0	<2.0	<2.0	<2.0	<2.0	<2.0	<2.0	<2.0
9/25/08 7:02	148,250								
9/25/08 7:02	148,250								
10/2/08 9:27	164,794	<2.0	<2.0	<2.0	<2.0	<2.0	<2.0	<2.0	<2.0
10/2/08 9:27	164,794								
10/9/08 10:08	181,208								
10/9/08 10:08	181,208								
10/24/08 11:40	204,093	<2.0	<2.0	<2.0	<2.0	<2.0	<2.0	<2.0	<2.0
10/24/08 11:40	204,093								
10/30/08 9:54	218,394								
11/6/08 9:54	234,636								
11/13/08 10:26	251,133								
11/25/08 13:39	263,504	<2.0	<2.0	<2.0	<2.0	<2.0	<2.0	<2.0	<2.0
11/25/08 13:39	263,504								
12/4/08 11:19	284,584								

Influent Metals Data

Date / Time	Number of Bed Volumes	Total Ag	Total Al	Dissolved As	Total As	Total Ba	Total Be	Total Ca	Total Cd	Total Cr	Total Cu
Unit:	**(BVs)**	ug/L	ug/L	µg/l	ug/l	ug/L	ug/l	mg/l	ug/L	ug/l	ug/L
1/17/07 15:30											
1/17/07 15:31	2.6										
1/17/07 15:32	4.8										
1/17/07 15:34	6.9										
1/17/07 15:35	10										
1/17/07 15:39	17										
1/17/07 15:51	26										
1/17/07 16:01	39										
1/17/07 16:01	39	<2.0			0.75	40	<2.0		3.3	<5.0	11
1/18/07 12:42	1,551										
1/20/07 8:15	4,994										
1/23/07 11:30	10,739										
1/24/07 11:15	12,607										
1/26/07 9:15	16,068										
1/31/07 11:20	25,231										
1/31/07 11:20	25,231										
2/2/07 9:00	28,742										
2/5/07 11:02	34,468										
2/7/07 9:45	38,173										
2/12/07 9:45	47,327										
2/14/07 9:45	51,159										
2/21/07 9:13	60,236	<2.0	20		<10	42	<2.0		4.3	<5.0	11
2/22/07 12:37	62,084										
2/28/07 10:59	71,248										
3/7/07 10:11	84,060										
3/14/07 9:57	96,689										
3/21/07 10:49	109,950	<2.0			<10	40	<2.0		<2.0	<5.0	<10
3/28/07 10:13	122,719										
3/29/07 10:30	124,715										
4/4/07 10:32	137,137										
4/11/07 10:20	151,169										
4/18/07 9:05	164,846										
4/25/07 11:23	178,890	<0.20	<5.0	0.67	0.72	43	<0.10	45	<0.10	3.2	4.8
4/25/07 11:23	178,890	<0.20	<5.0	0.73	0.72	43	<0.10	46	<0.10	3.2	4.0
5/2/07 10:34	193,212										
5/9/07 10:00	207,542										
5/16/07 11:52	219,846										

Date / Time	Number of Bed Volumes	Total Ag	Total Al	Dissolved As	Total As	Total Ba	Total Be	Total Ca	Total Cd	Total Cr	Total Cu
Unit:	(BVs)	ug/L	ug/L	µg/l	ug/l	ug/L	ug/l	mg/l	ug/L	ug/l	ug/L
5/23/07 11:24	234,143	<0.20	5.4		0.71	42	<0.10		<0.10	3.2	7.8
5/30/07 11:08	249,116										
5/30/07 11:08	249,116										
6/8/07 11:08	267,967										
8/10/07 16:45	0	<0.20	<5.0		0.65	43	<0.10	45	<0.10	3.0	1.4
8/31/07 13:05	20,252										
8/31/07 13:05	20,252										
9/5/07 10:16	30,295										
9/12/07 14:25	44,970										
9/19/07 12:45	59,218	<0.20	<5.0		0.73	45	<0.10	44	<0.10	3.3	7.7
9/26/07 13:55	71,408										
10/3/07 12:50	83,238										
10/10/07 15:49	99,295										
10/10/07 15:49	99,295										
10/17/07 13:05	114,929	<0.20	5.2		0.70	43	<0.10	46	<0.10	3.1	14
10/19/07 9:44	119,160										
10/24/07 13:54	131,148										
10/24/07 13:54	131,148										
10/31/07 11:33	147,346										
11/9/07 7:38	166,760										
11/14/07 12:30	177,050	<0.20	8.1	<0.64	0.64	43	<0.10	47	<0.10	3.0	13
11/14/07 12:30	177,050	<0.20	8.3		0.59	42	<0.10	47	<0.10	3.1	8.8
11/21/07 11:27	191,103										
11/26/07 11:25	201,942										
1/2/08 13:47	0	<0.20	17		0.66	42	<0.10	48	<0.10	3.5	25
1/2/08 13:52	9										
1/2/08 13:57	18										
1/2/08 14:17	55										
1/4/08 10:51	4,784										
1/9/08 12:33	16,991										
1/9/08 12:33	16,991										
1/16/08 14:15	33,680										
1/23/08 13:08	50,139										
1/23/08 13:08	50,139										
1/30/08 8:07	66,304	<0.20	<5.0		0.63	42	<0.10	46	<0.10	2.9	19
2/4/08 10:04	78,458										
2/11/08 11:52	95,335										
2/15/08 13:47	105,438										
2/20/08 12:54	117,487										
2/22/08 10:05	122,036										

Date / Time	Number of Bed Volumes	Total Ag	Total Al	Dissolved As	Total As	Total Ba	Total Be	Total Ca	Total Cd	Total Cr	Total Cu
Unit:	**(BVs)**	ug/L	ug/L	µg/l	ug/l	ug/L	ug/l	mg/l	ug/L	ug/l	ug/L
2/27/08 8:40	134,028	<0.20	<5.0		0.58	39	<0.10	46	<0.10	2.8	2.5
2/27/08 8:40	134,028										
3/3/08 13:45	146,639										
3/3/08 13:45	146,639										
3/12/08 10:04	167,816										
3/17/08 11:17	179,959										
3/28/08 11:00	206,681	<0.20	<5.0		0.80	50	<0.10	49	<0.10	3.5	14
3/28/08 11:00	206,681	<0.20	<5.0		0.80	50	<0.10	48	<0.10	3.4	14
3/31/08 11:33	214,172										
3/31/08 11:33	214,172										
4/7/08 11:05	230,415										
4/14/08 12:43	246,639										
7/24/08 11:30	0				0.70			48			
7/24/08 11:35											
7/24/08 11:50											
7/28/08 9:49	9,073										
7/31/08 11:43	16,503										
8/7/08 8:41	32,575										
8/7/08 8:41	32,575										
8/14/08 12:09	49,414										
8/21/08 11:42	65,892	<0.20	22		0.80	44	<0.10		<0.10	3.4	8.7
8/28/08 11:26	82,404										
9/4/08 9:35	98,773										
9/11/08 7:18	115,424										
9/11/08 7:18	115,424										
9/18/08 11:53	132,286	<0.20	<5.0		0.65	42	<0.10	45	<0.10	3.3	3.7
9/25/08 7:02	148,250										
9/25/08 7:02	148,250										
10/2/08 9:27	164,794										
10/2/08 9:27	164,794										
10/9/08 10:08	181,208										
10/9/08 10:08	181,208										
10/24/08 11:40	204,093	<0.20	5.2		0.65	38	<0.10	47	<0.10	3.3	5.0
10/24/08 11:40	204,093										
10/30/08 9:54	218,394										
11/6/08 9:54	234,636										
11/13/08 10:26	251,133										
11/25/08 13:39	263,504	<0.20	6.9		0.81	42	<0.10	47	<0.10	3.4	8.0
11/25/08 13:39	263,504										
12/4/08 11:19	284,584										

Date / Time	Number of Bed Volumes	Dissolved Fe	Total Fe	Total Hg	K	Total Mg	Dissolved Mn	Total Mn	Na	Total Ni	Total Pb
Unit:	**(BVs)**	ug/l	ug/l	ug/L	mg/l	mg/l	ug/l	ug/l	mg/l	ug/l	ug/L
1/17/07 15:30											
1/17/07 15:31	2.6										
1/17/07 15:32	4.8										
1/17/07 15:34	6.9										
1/17/07 15:35	10										
1/17/07 15:39	17										
1/17/07 15:51	26										
1/17/07 16:01	39										
1/17/07 16:01	39	36	<20	<0.10			0.56	0.25		<5.0	<5.0
1/18/07 12:42	1,551										
1/20/07 8:15	4,994										
1/23/07 11:30	10,739										
1/24/07 11:15	12,607										
1/26/07 9:15	16,068										
1/31/07 11:20	25,231										
1/31/07 11:20	25,231										
2/2/07 9:00	28,742										
2/5/07 11:02	34,468										
2/7/07 9:45	38,173										
2/12/07 9:45	47,327										
2/14/07 9:45	51,159										
2/21/07 9:13	60,236	<20	<20				<10	<10		<5.0	<5.0
2/22/07 12:37	62,084										
2/28/07 10:59	71,248										
3/7/07 10:11	84,060										
3/14/07 9:57	96,689										
3/21/07 10:49	109,950	<20	<20	<0.10			<10	<10		<5.0	<5.0
3/28/07 10:13	122,719										
3/29/07 10:30	124,715										
4/4/07 10:32	137,137										
4/11/07 10:20	151,169										
4/18/07 9:05	164,846										
4/25/07 11:23	178,890	<20	<20	<0.10	1.8		<0.20	<0.20	25	<0.80	0.22
4/25/07 11:23	178,890	<20	<20	<0.10	1.8		<0.20	<0.20	26	<0.80	0.22
5/2/07 10:34	193,212										
5/9/07 10:00	207,542										
5/16/07 11:52	219,846										

Date / Time	Number of Bed Volumes	Dissolved Fe	Total Fe	Total Hg	K	Total Mg	Dissolved Mn	Total Mn	Na	Total Ni	Total Pb
Unit:	**(BVs)**	ug/l	ug/l	ug/L	mg/l	mg/l	ug/l	ug/l	mg/l	ug/l	ug/L
5/23/07 11:24	234,143	<20	<20	<0.10			<10	<0.20		<0.80	0.27
5/30/07 11:08	249,116										
5/30/07 11:08	249,116										
6/8/07 11:08	267,967										
8/10/07 16:45	0	<20	<20	<0.10	1.8		<0.20	<0.20	25	<0.80	<0.20
8/31/07 13:05	20,252	<20	<20								
8/31/07 13:05	20,252										
9/5/07 10:16	30,295	<20	<20								
9/12/07 14:25	44,970										
9/19/07 12:45	59,218	<20	<20	<0.10	1.6		<0.20	<0.20	25	<0.80	0.28
9/26/07 13:55	71,408										
10/3/07 12:50	83,238										
10/10/07 15:49	99,295										
10/10/07 15:49	99,295										
10/17/07 13:05	114,929	<20	<20	<0.10	1.9		<0.20	<0.20	25	<0.80	0.36
10/19/07 9:44	119,160										
10/24/07 13:54	131,148										
10/24/07 13:54	131,148										
10/31/07 11:33	147,346										
11/9/07 7:38	166,760										
11/14/07 12:30	177,050	<20	<20	<0.10	1.7		<5.0	0.41	26	<0.80	0.49
11/14/07 12:30	177,050	<20	<20		1.8		<5.0	<0.20	26	<0.80	0.38
11/21/07 11:27	191,103										
11/26/07 11:25	201,942										
1/2/08 13:47	0	<20	<20	<0.10	1.8		<5.0	<0.20	26	<0.80	0.87
1/2/08 13:52	9										
1/2/08 13:57	18										
1/2/08 14:17	55										
1/4/08 10:51	4,784										
1/9/08 12:33	16,991	<20	<20								
1/9/08 12:33	16,991										
1/16/08 14:15	33,680	<20	<20								
1/23/08 13:08	50,139	<20	<20								
1/23/08 13:08	50,139										
1/30/08 8:07	66,304	<20	<20	<0.10	1.8		<0.20	<0.20	26	<0.80	0.41
2/4/08 10:04	78,458										
2/11/08 11:52	95,335										
2/15/08 13:47	105,438										
2/20/08 12:54	117,487										
2/22/08 10:05	122,036										

Date / Time	Number of Bed Volumes	Dissolved Fe	Total Fe	Total Hg	K	Total Mg	Dissolved Mn	Total Mn	Na	Total Ni	Total Pb
Unit:	**(BVs)**	ug/l	ug/l	ug/L	mg/l	mg/l	ug/l	ug/l	mg/l	ug/l	ug/L
2/27/08 8:40	134,028	<20	<20		1.8	9.8	<0.20	<0.20	25	<0.80	<0.20
2/27/08 8:40	134,028										
3/3/08 13:45	146,639										
3/3/08 13:45	146,639										
3/12/08 10:04	167,816										
3/17/08 11:17	179,959										
3/28/08 11:00	206,681	<20	<20		2.0		<0.20	<0.20	26	<0.80	0.58
3/28/08 11:00	206,681	<20	<20	<0.10	1.9		0.37	<0.20	26	<0.80	0.35
3/31/08 11:33	214,172										
3/31/08 11:33	214,172										
4/7/08 11:05	230,415										
4/14/08 12:43	246,639										
7/24/08 11:30	0	<20	<10		1.7		<0.20	1.8	25		
7/24/08 11:35											
7/24/08 11:50											
7/28/08 9:49	9,073										
7/31/08 11:43	16,503	<20	<10								
8/7/08 8:41	32,575	<20	<10								
8/7/08 8:41	32,575										
8/14/08 12:09	49,414	<20	<10								
8/21/08 11:42	65,892	<20		<0.050			<0.20	7.0		<0.80	0.59
8/28/08 11:26	82,404										
9/4/08 9:35	98,773										
9/11/08 7:18	115,424										
9/11/08 7:18	115,424										
9/18/08 11:53	132,286	<20	<10		1.8		<5.0	<0.20	24	<0.80	<0.20
9/25/08 7:02	148,250										
9/25/08 7:02	148,250										
10/2/08 9:27	164,794										
10/2/08 9:27	164,794										
10/9/08 10:08	181,208										
10/9/08 10:08	181,208										
10/24/08 11:40	204,093	<20	<10	<0.050	1.8		<0.20	<0.20	21	<0.80	0.23
10/24/08 11:40	204,093										
10/30/08 9:54	218,394										
11/6/08 9:54	234,636										
11/13/08 10:26	251,133										
11/25/08 13:39	263,504	<20	<10	<0.050	2.0		<0.20	<0.20	25	<0.80	0.34
11/25/08 13:39	263,504										
12/4/08 11:19	284,584										

Date / Time	Number of Bed Volumes	Total Sb (antimony)	Total Se	Total Tl (thallium)	Dissolved U	Total U	Total V	Total Zn	Total VOCs	Total SVOCs	Gross Alpha	Radon
Unit:	**(BVs)**	ug/L	ug/L	ug/L	ug/l	ug/l	ug/L	ug/l				pCi/L
1/17/07 15:30												
1/17/07 15:31	2.6											
1/17/07 15:32	4.8											
1/17/07 15:34	6.9											
1/17/07 15:35	10											
1/17/07 15:39	17											
1/17/07 15:51	26											
1/17/07 16:01	39											
1/17/07 16:01	39	<10	72	<50	2.0	1.8	9.3	<50	ND	ND	1.0	
1/18/07 12:42	1,551											
1/20/07 8:15	4,994											
1/23/07 11:30	10,739											
1/24/07 11:15	12,607											
1/26/07 9:15	16,068											
1/31/07 11:20	25,231											
1/31/07 11:20	25,231											
2/2/07 9:00	28,742											
2/5/07 11:02	34,468											
2/7/07 9:45	38,173											
2/12/07 9:45	47,327											
2/14/07 9:45	51,159											
2/21/07 9:13	60,236	<10	<30	<50	1.5	1.6	8.7	<50	ND	ND	0.0	
2/22/07 12:37	62,084											87
2/28/07 10:59	71,248											
3/7/07 10:11	84,060											
3/14/07 9:57	96,689											
3/21/07 10:49	109,950	<10	<30	<50	1.7	1.7	9.7	<50	ND	ND	2.3	102
3/28/07 10:13	122,719											
3/29/07 10:30	124,715											
4/4/07 10:32	137,137											
4/11/07 10:20	151,169											
4/18/07 9:05	164,846											
4/25/07 11:23	178,890	<0.50	0.68	<0.20	1.9	1.9		9.1	ND	ND	1.4	
4/25/07 11:23	178,890	<0.50	0.64	<0.20	1.9	2.0		6.5	ND	ND	2.2	
5/2/07 10:34	193,212											
5/9/07 10:00	207,542											
5/16/07 11:52	219,846											

Date / Time	Number of Bed Volumes	Total Sb (antimony)	Total Se	Total Tl (thallium)	Dissolved U	Total U	Total V	Total Zn	Total VOCs	Total SVOCs	Gross Alpha	Radon
Unit:	**(BVs)**	ug/L	ug/L	ug/L	ug/l	ug/l	ug/L	ug/l				pCi/l
5/23/07 11:24	234,143	<0.50	0.66	<0.20	1.8	1.9		10	ND	ND	1.9	
5/30/07 11:08	249,116											139
5/30/07 11:08	249,116											
6/8/07 11:08	267,967											
8/10/07 16:45	0	<0.50	0.61	<0.20	2.0	2.1		6.4	ND	ND	6.5	133
8/31/07 13:05	20,252											
8/31/07 13:05	20,252											
9/5/07 10:16	30,295											
9/12/07 14:25	44,970											
9/19/07 12:45	59,218	<0.50	0.66	<0.20	2.6	2.6		8.2	ND	ND	3.4	
9/26/07 13:55	71,408											
10/3/07 12:50	83,238											
10/10/07 15:49	99,295											
10/10/07 15:49	99,295											
10/17/07 13:05	114,929	<0.50	0.61	<0.20	2.2	2.2		13			0.63	
10/19/07 9:44	119,160											<75
10/24/07 13:54	131,148											
10/24/07 13:54	131,148											
10/31/07 11:33	147,346											
11/9/07 7:38	166,760											
11/14/07 12:30	177,050	<0.50	0.63	<0.20	2.5	2.5		15	ND	ND	4	
11/14/07 12:30	177,050	<0.50	0.50	<0.20	2.5	2.5		9.7	ND	ND	3.1	
11/21/07 11:27	191,103											
11/26/0711:25	201,942											
1/2/08 13:47	0	<0.50	0.82	<0.20	2.3	2.3		19	ND	ND	8	
1/2/08 13:52	9											
1/2/08 13:57	18											
1/2/08 14:17	55											
1/4/08 10:51	4,784											
1/9/08 12:33	16,991								ND			
1/9/08 12:33	16,991											
1/16/08 14:15	33,680								ND			
1/23/08 13:08	50,139											
1/23/08 13:08	50,139											
1/30/08 8:07	66,304	<0.50	0.64	<0.20	2.3	2.3		7.9	ND		8.4	
2/4/08 10:04	78,458											
2/11/08 11:52	95,335											
2/15/08 13:47	105,438											
2/20/08 12:54	117,487											
2/22/08 10:05	122,036											

Date / Time	Number of Bed Volumes	Total Sb (antimony)	Total Se	Total Tl (thallium)	Dissolved U	Total U	Total V	Total Zn	Total VOCs	Total SVOCs	Gross Alpha	Radon
Unit:	**(BVs)**	ug/L	ug/L	ug/L	ug/l	ug/l	ug/L	ug/l				pCi/L
2/27/08 8:40	134,028	<0.50	<0.40	<0.20	2.4	2.4		6.9	ND		5.2	<75
2/27/08 8:40	134,028											
3/3/08 13:45	146,639											
3/3/08 13:45	146,639											
3/12/08 10:04	167,816											
3/17/08 11:17	179,959											
3/28/08 11:00	206,681	<0.50	0.75	<0.20	2.6	2.6		8.6	ND		4.2	
3/28/08 11:00	206,681	<0.50	0.70	<0.20	2.7	2.6		13	ND		5	
3/31/08 11:33	214,172											
3/31/08 11:33	214,172											
4/7/08 11:05	230,415											
4/14/08 12:43	246,639											
7/24/08 11:30	0				2.6				ND		4.2	
7/24/08 11:35												
7/24/08 11:50												
7/28/08 9:49	9,073											
7/31/08 11:43	16,503											
8/7/08 8:41	32,575											
8/7/08 8:41	32,575											
8/14/08 12:09	49,414											
8/21/08 11:42	65,892	<0.50	0.78	<0.20	2.1	2.2		10	ND		0	163
8/28/08 11:26	82,404											
9/4/08 9:35	98,773											
9/11/08 7:18	115,424											
9/11/08 7:18	115,424											
9/18/08 11:53	132,286	<0.50	0.71	<0.20	2.3	2.2		5.2	ND		0.441	
9/25/08 7:02	148,250											126
9/25/08 7:02	148,250											
10/2/08 9:27	164,794											
10/2/08 9:27	164,794											
10/9/08 10:08	181,208											
10/9/08 10:08	181,208											
10/24/08 11:40	204,093	<0.50	0.65	<0.20	1.8	1.8		9.8	ND		0.732	143
10/24/08 11:40	204,093											
10/30/08 9:54	218,394											
11/6/08 9:54	234,636											
11/13/08 10:26	251,133											
11/25/08 13:39	263,504	<0.50	0.68	<0.20	2.0	2.1		12	ND		0	
11/25/08 13:39	263,504											
12/4/08 11:19	284,584											

Effluent Data

Date / Time	Number of Bed Volumes	Perchlorate by Weck	level by LC-IC-MS-MS	Perchlorate by Test America	Nitrate	Sulfate	pH	TDS	TOC	Chloride	Fluoride	Alkalinity as CaCO3	Alkalinity as HCO3
Unit:	**(BVs)**	ug/l	ug/l	ug/l	mg/l	mg/l	s.u.	mg/l	mg/l	mg/l	mg/l	mg/l	mg/l
1/17/07 15:30													
1/17/07 15:31	2.6				0.50	1.8	7.49			93			
1/17/07 15:32	4.8				<0.50	1.8	7.45			100			
1/17/07 15:34	6.9				<0.50	1.9	7.55			97			
1/17/07 15:35	10				<0.50	1.7	7.47			99			
1/17/07 15:39	17				<0.50	1.7	7.49			96			
1/17/07 15:51	26				<0.50	1.9	7.53			96			
1/17/07 16:01	39				<0.50	1.6	7.65			82			
1/17/07 16:01	39	ND			<0.50	1.9	7.67	260	0.48	86	0.22		
1/18/07 12:42	1,551												
1/20/07 8:15	4,994												
1/23/07 11:30	10,739												
1/24/07 11:15	12,607	ND			31	17	7.97	200	ND				
1/26/07 9:15	16,068												
1/31/07 11:20	25,231	ND			33	15	7.92	170	ND	11	0.14		
1/31/07 11:20	25,231	ND			33	15	7.96	190	ND	11	0.15		
2/2/07 9:00	28,742												
2/5/07 11:02	34,468												
2/7/07 9:45	38,173	ND			31	15	7.93	220	ND				
2/12/07 9:45	47,327												
2/14/07 9:45	51,159	ND			32	15	7.82	280	ND	11	0.17		
2/21/07 9:13	60,236	ND			26	13	7.93	240	<0.3				
2/22/07 12:37	62,084												
2/28/07 10:59	71,248	ND			33	16	7.92	260	ND	12	0.17		
3/7/07 10:11	84,060	ND			32	16	7.89	220	ND				
3/14/07 9:57	96,689	ND			32	16	7.88	210	ND	11	0.14		
3/21/07 10:49	109,950	4.0			33	17	7.81	240	ND			150	180
3/28/07 10:13	122,719	2.9			31	15	7.82	240	ND	11	0.16		
3/29/07 10:30	124,715												
4/4/07 10:32	137,137	3.0			32	14	7.57	240	ND				
4/11/07 10:20	151,169	4.6			31	14	7.68	300	ND	12	0.15		
4/18/07 9:05	164,846	4.7			32	15	7.53	220	ND				
4/25/07 11:23	178,890	5.5			32	15	6.9	250	ND	12	--		210
4/25/07 11:23	178,890												
5/2/07 10:34	193,212	6.4			32	15	7.51	170	ND				
5/9/07 10:00	207,542	6.3			34	15	7.25	230	ND	12	0.17		
5/16/07 11:52	219,846	7.1			33	15	7.99	260	ND				

Date / Time	Number of Bed Volumes	Perchlorate by Weck	level by LC-IC-MS-MS	Perchlorate by Test America	Nitrate	Sulfate	pH	TDS	TOC	Chloride	Fluoride	Alkalinity as CaCO3	Alkalinity as HCO3
Unit:	**(BVs)**	ug/l	ug/l	ug/l	mg/l	mg/l	s.u.	mg/l	mg/l	mg/l	mg/l	mg/l	mg/l
5/23/07 11:24	234,143	7.7			34	16	7.94	170	ND	12	0.18		
5/30/07 11:08	249,116	7.2			35	16	8.03	150	ND				
5/30/07 11:08	249,116												
6/8/07 11:08	267,967	6.9			34	15	7.98	230	ND	12	0.18		
8/10/07 16:45	0	ND			7.2	2	7.58	270	ND	38	<0.1		180
8/31/07 13:05	20,252	ND			38	17	7.7	270	ND				
8/31/07 13:05	20,252												
9/5/07 10:16	30,295	ND			38	17	8.5	280	ND	13	0.2		
9/12/07 14:25	44,970	ND			38	17	8.06	330	ND				
9/19/07 12:45	59,218	ND			39	17	8.03	300	ND	13	0.18		
9/26/07 13:55	71,408	ND			39	17	8.04	310	ND				
10/3/07 12:50	83,238	ND			39	17	7.89	260	ND	13	0.17		
10/10/07 15:49	99,295	ND			37	17	7.91	260					
10/10/07 15:49	99,295												
10/17/07 13:05	114,929	ND			37	17	8.01	270	nd	12	0.17		
10/19/07 9:44	119,160												
10/24/07 13:54	131,148	3.2			37	17	7.79	280	0.32				
10/24/07 13:54	131,148												
10/31/07 11:33	147,346	5.4			36	17	7.85	320	ND	12	0.18		
11/9/07 7:38	166,760	5.8			38	16	8.01	310	0.4				
11/14/07 12:30	177,050	7.1			37	16	7.99	310	ND	13	0.19		
11/14/07 12:30	177,050												
11/21/07 11:27	191,103	7.2			38	16	7.95	320	ND				
11/26/07 11:25	201,942	7.9			37	16	7.99	300	ND	13	0.19		
1/2/08 13:47	0	ND			ND	ND	7.83	260	ND	45	0.17		
1/2/08 13:52	9												
1/2/08 13:57	18												
1/2/08 14:17	55												
1/4/08 10:51	4,784												
1/9/08 12:33	16,991	ND			38	17	7.89	290	ND				
1/9/08 12:33	16,991												
1/16/08 14:15	33,680	ND			38	17	7.75	280	ND	13	0.16		
1/23/08 13:08	50,139	ND											
1/23/08 13:08	50,139												
1/30/08 8:07	66,304	ND			37	17	7.66	260	ND	13	0.19		
2/4/08 10:04	78,458	ND											
2/11/08 11:52	95,335	ND											
2/15/08 13:47	105,438												
2/20/08 12:54	117,487	2.3											
2/22/08 10:05	122,036			2.6									

Date / Time	Number of Bed Volumes	Perchlorate by Weck	level by LC-IC-MS-MS	Perchlorate by Test America	Nitrate	Sulfate	pH	TDS	TOC	Chloride	Fluoride	Alkalinity as CaCO3	Alkalinity as HCO3
Unit:	**(BVs)**	ug/l	ug/l	ug/l	mg/l	mg/l	s.u.	mg/l	mg/l	mg/l	mg/l	mg/l	mg/l
2/27/08 8:40	134,028	3.5		3.4	38	17	7.1	260	ND	13	0.19		
2/27/08 8:40	134,028												
3/3/08 13:45	146,639	5.9											
3/3/08 13:45	146,639	5.7											
3/12/08 10:04	167,816	6.0											
3/17/08 11:17	179,959	9.2											
3/28/08 11:00	206,681	6.5			38	17	7.89	240	ND	13	0.18		
3/28/08 11:00	206,681												
3/31/08 11:33	214,172	6.7											
3/31/08 11:33	214,172	6.1											
4/7/08 11:05	230,415	8.1											
4/14/08 12:43	246,639	7.1											
7/24/08 11:30	0	ND			ND	ND	7.94	210	ND	14	0.18		
7/24/08 11:35													
7/24/08 11:50													
7/28/08 9:49	9,073												
7/31/08 11:43	16,503	ND			37	17	7.85	290	ND				
8/7/08 8:41	32,575	ND			39	17	7.84	270	ND				
8/7/08 8:41	32,575												
8/14/08 12:09	49,414	ND											
8/21/08 11:42	65,892	ND			40	18	7.74	260	ND	14	0.19		
8/28/08 11:26	82,404	ND											
9/4/08 9:35	98,773	2.8											
9/11/08 7:18	115,424	2.6											
9/11/08 7:18	115,424												
9/18/08 11:53	132,286	3.6			38	17	7.89	290	ND	13	0.19		
9/25/08 7:02	148,250	5.3											
9/25/08 7:02	148,250												
10/2/08 9:27	164,794	5	6.4										
10/2/08 9:27	164,794												
10/9/08 10:08	181,208	6.2											
10/9/08 10:08	181,208	6.8											
10/24/08 11:40	204,093	6.4			35	17	7.84	260	ND	12	0.18		
10/24/08 11:40	204,093	6.1			35	17	7.89	250	ND	12	0.18		
10/30/08 9:54	218,394	7.3											
11/6/08 9:54	234,636	7.4											
11/13/08 10:26	251,133	7.5											
11/25/08 13:39	263,504	7.1			38	17	7.94	280	ND	12	0.19		
11/25/08 13:39	263,504	7.1											
12/4/08 11:19	284,584	9.5											

Effluent Nitrosamine Data

Date / Time	Number of Bed Volumes	Nitrosodimethylamine	Nitrosomethylethylamine	Nitrosodiethylamine	N-Nitrosodi-n-propylamine	N-Nitrosomorpholine	N-Nitrosopyrrolidine	N-Nitrosopiperidine	N-Nitrosodi-n-butylamine
Unit:	**(BVs)**	ng/l	ng/l	ng/l	ng/l	ng/l	ng/l	ng/l	ng/l
1/17/07 15:30									
1/17/07 15:31	2.6	**130**	<2.0	**3.3**	<2.0	<2.0	<2.0	<2.0	<2.0
1/17/07 15:32	4.8	**83**	<2.0	<2.0	<2.0	<2.0	<2.0	<2.0	<2.0
1/17/07 15:34	6.9	**61**	<2.0	<2.0	<2.0	<2.0	<2.0	<2.0	<2.0
1/17/07 15:35	10	**140**	<2.0	<2.0	<2.0	<2.0	<2.0	<2.0	<2.0
1/17/07 15:39	17	**41**	<2.0	<2.0	<2.0	<2.0	<2.0	<2.0	<2.0
1/17/07 15:51	26	**43**	<2.0	<2.0	<2.0	<2.0	<2.0	<2.0	<2.0
1/17/07 16:01	39	**16**	<2.0	<2.0	<2.0	<2.0	<2.0	<2.0	<2.0
1/17/07 16:01	39								
1/18/07 12:42	1,551								
1/20/07 8:15	4,994								
1/23/07 11:30	10,739								
1/24/07 11:15	12,607								
1/26/07 9:15	16,068								
1/31/07 11:20	25,231	<2.0	<2.0	<2.0	<2.0	<2.0	<2.0	<2.0	<2.0
1/31/07 11:20	25,231								
2/2/07 9:00	28,742								
2/5/07 11:02	34,468								
2/7/07 9:45	38,173								
2/12/07 9:45	47,327								
2/14/07 9:45	51,159	<2.0	<2.0	<2.0	<2.0	<2.0	<2.0	<2.0	<2.0
2/21/07 9:13	60,236								
2/22/07 12:37	62,084								
2/28/07 10:59	71,248	<2.0	<2.0	<2.0	<2.0	<2.0	<2.0	<2.0	<2.0
3/7/07 10:11	84,060								
3/14/07 9:57	96,689	<2.0	<2.0	<2.0	<2.0	<2.0	<2.0	<2.0	<2.0
3/21/07 10:49	109,950								
3/28/07 10:13	122,719	<2.0	<2.0	<2.0	<2.0	<2.0	<2.0	<2.0	<2.0
3/29/07 10:30	124,715								
4/4/07 10:32	137,137								
4/11/07 10:20	151,169	<2.0	<2.0	<2.0	<2.0	<2.0	<2.0	<2.0	<2.0
4/18/07 9:05	164,846								
4/25/07 11:23	178,890	<2.0	<2.0	<2.0	<2.0	<2.0	<2.0	<2.0	<2.0
4/25/07 11:23	178,890								
5/2/07 10:34	193,212								
5/9/07 10:00	207,542	<2.0	<2.0	<2.0	<2.0	<2.0	<2.0	<2.0	<2.0
5/16/07 11:52	219,846								

Date / Time	Number of Bed Volumes	Nitrosodimethylamine	Nitrosomethylethylamine	Nitrosodiethylamine	N-Nitrosodi-n-propylamine	N-Nitrosomorpholine	N-Nitrosopyrrolidine	N-Nitrosopiperidine	N-Nitrosodi-n-butylamine
Unit:	**(BVs)**	ng/l	ng/l	ng/l	ng/l	ng/l	ng/l	ng/l	ng/l
5/23/07 11:24	234,143	<2.0	<2.0	<2.0	<2.0	<2.0	<2.0	<2.0	<2.0
5/30/07 11:08	249,116								
5/30/07 11:08	249,116								
6/8/07 11:08	267,967	<2.0	<2.0	<2.0	<2.0	<2.0	<2.0	<2.0	<2.0
8/10/07 16:45	0	<2.0	<2.0	<2.0	<2.0	<2.0	<2.0	<2.0	<2.0
8/31/07 13:05	20,252								
8/31/07 13:05	20,252								
9/5/07 10:16	30,295	<2.0	<2.0	<2.0	<2.0	<2.0	<2.0	<2.0	<2.0
9/12/07 14:25	44,970								
9/19/07 12:45	59,218	<2.0	<2.0	<2.0	<2.0	<2.0	<2.0	<2.0	<2.0
9/26/07 13:55	71,408								
10/3/07 12:50	83,238	<2.0	<2.0	<2.0	<2.0	<2.0	<2.0	<2.0	<2.0
10/10/07 15:49	99,295								
10/10/07 15:49	99,295								
10/17/07 13:05	114,929	<2.0	<2.0	<2.0	<2.0	<2.0	<2.0	<2.0	<2.0
10/19/07 9:44	119,160								
10/24/07 13:54	131,148								
10/24/07 13:54	131,148								
10/31/07 11:33	147,346	<2.0	<2.0	<2.0	<2.0	<2.0	<2.0	<2.0	<2.0
11/9/07 7:38	166,760								
11/14/07 12:30	177,050	<2.0	<2.0	<2.0	<2.0	<2.0	<2.0	<2.0	<2.0
11/14/07 12:30	177,050								
11/21/07 11:27	191,103								
11/26/07 11:25	201,942	<2.0	<2.0	<2.0	<2.0	<2.0	<2.0	<2.0	<2.0
1/2/08 13:47	0	<2.0	<2.0	<2.0	<2.0	<2.0	<2.0	<2.0	<2.0
1/2/08 13:52	9	<2.0	<2.0	<2.0	<2.0	<2.0	<2.0	<2.0	<2.0
1/2/08 13:57	18	<2.0	<2.0	<2.0	<2.0	<2.0	<2.0	<2.0	<2.0
1/2/08 14:17	55	**2.3**	<2.0	<2.0	<2.0	<2.0	<2.0	<2.0	<2.0
1/4/08 10:51	4,784								
1/9/08 12:33	16,991	<2.0	<2.0	<2.0	<2.0	<2.0	<2.0	<2.0	<2.0
1/9/08 12:33	16,991								
1/16/08 14:15	33,680	<2.0	<2.0	<2.0	<2.0	<2.0	<2.0	<2.0	<2.0
1/23/08 13:08	50,139								
1/23/08 13:08	50,139								
1/30/08 8:07	66,304	<2.0	<2.0	<2.0	<2.0	<2.0	<2.0	<2.0	<2.0
2/4/08 10:04	78,458								
2/11/08 11:52	95,335								
2/15/08 13:47	105,438								
2/20/08 12:54	117,487								
2/22/08 10:05	122,036								

Date / Time	Number of Bed Volumes	Nitrosodimethylamine	Nitrosomethylethylamine	Nitrosodiethylamine	N-Nitrosodi-n-propylamine	N-Nitrosomorpholine	N-Nitrosopyrrolidine	N-Nitrosopiperidine	N-Nitrosodi-n-butylamine
Unit:	**(BVs)**	ng/l	ng/l	ng/l	ng/l	ng/l	ng/l	ng/l	ng/l
2/27/08 8:40	134,028	**10**	<2.0	<2.0	<2.0	<2.0	<2.0	<2.0	<2.0
2/27/08 8:40	134,028								
3/3/08 13:45	146,639								
3/3/08 13:45	146,639								
3/12/08 10:04	167,816								
3/17/08 11:17	179,959								
3/28/08 11:00	206,681	**4**	<2.0	<2.0	<2.0	**41**	<2.0	<2.0	<2.0
3/28/08 11:00	206,681								
3/31/08 11:33	214,172								
3/31/08 11:33	214,172								
4/7/08 11:05	230,415								
4/14/08 12:43	246,639								
7/24/08 11:30	0	<2.0	<2.0	<2.0	<2.0	<2.0	<2.0	<2.0	**2.1**
7/24/08 11:35		<2.0	<2.0	<2.0	<2.0	<2.0	<2.0	<2.0	<2.0
7/24/08 11:50		<2.0	<2.0	<2.0	<2.0	<2.0	<2.0	<2.0	<2.0
7/28/08 9:49	9,073	<2.0	<2.0	<2.0	<2.0	<2.0	<2.0	<2.0	**2.3**
7/31/08 11:43	16,503	<2.0	<2.0	<2.0	<2.0	<2.0	<2.0	<2.0	**2.3**
8/7/08 8:41	32,575	<2.0	<2.0	<2.0	<2.0	<2.0	<2.0	<2.0	<2.0
8/7/08 8:41	32,575								
8/14/08 12:09	49,414								
8/21/08 11:42	65,892	<2.0	<2.0	<2.0	<2.0	**2.1B**	<2.0	<2.0	<2.0
8/28/08 11:26	82,404								
9/4/08 9:35	98,773	<2.0	<2.0	<2.0	<2.0	<2.0	<2.0	<2.0	<2.0
9/11/08 7:18	115,424								
9/11/08 7:18	115,424								
9/18/08 11:53	132,286	<2.0	<2.0	<2.0	<2.0	<2.0	<2.0	<2.0	<2.0
9/25/08 7:02	148,250								
9/25/08 7:02	148,250								
10/2/08 9:27	164,794	<2.0	<2.0	<2.0	<2.0	<2.0	<2.0	<2.0	<2.0
10/2/08 9:27	164,794	<2.0	<2.0	<2.0	<2.0	<2.0	<2.0	<2.0	<2.0
10/9/08 10:08	181,208								
10/9/08 10:08	181,208								
10/24/08 11:40	204,093	<2.0	<2.0	<2.0	<2.0	<2.0	<2.0	<2.0	<2.0
10/24/08 11:40	204,093	<2.0	<2.0	<2.0	<2.0	<2.0	<2.0	<2.0	<2.0
10/30/08 9:54	218,394								
11/6/08 9:54	234,636								
11/13/08 10:26	251,133								
11/25/08 13:39	263,504	<2.0	<2.0	<2.0	<2.0	<2.0	<2.0	<2.0	<2.0
11/25/08 13:39	263,504								
12/4/08 11:19	284,584								

Effluent Metals Data

Date / Time	Number of Bed Volumes	Total Ag	Total Al	Dissolved As	Total As	Total Ba	Total Be	Total Ca	Total Cd	Total Cr	Total Cu	Dissolved Fe	Total Fe
Unit:	**(BVs)**	ug/L	ug/L	µg/l	µg/l	ug/L	ug/L	mg/l	ug/L	ug/l	ug/L	ug/l	ug/
1/17/07 15:30													
1/17/07 15:31	2.6												
1/17/07 15:32	4.8												
1/17/07 15:34	6.9												
1/17/07 15:35	10												
1/17/07 15:39	17												
1/17/07 15:51	26												
1/17/07 16:01	39												
1/17/07 16:01	39	<2.0			<0.40	40	<2.0		2.8	<5.0	18	<20	<2(
1/18/07 12:42	1,551												
1/20/07 8:15	4,994												
1/23/07 11:30	10,739												
1/24/07 11:15	12,607												
1/26/07 9:15	16,068												
1/31/07 11:20	25,231												
1/31/07 11:20	25,231												
2/2/07 9:00	28,742												
2/5/07 11:02	34,468												
2/7/07 9:45	38,173												
2/12/07 9:45	47,327												
2/14/07 9:45	51,159												
2/21/07 9:13	60,236	<2.0	8600		<10	42	<2.0		4.7	<5.0	12	<20	<2(
2/22/07 12:37	62,084												
2/28/07 10:59	71,248												
3/7/07 10:11	84,060												
3/14/07 9:57	96,689												
3/21/07 10:49	109,950	<2.0			<10	40	<2.0		<2.0	<5.0	<10	<20	<2(
3/28/07 10:13	122,719												
3/29/07 10:30	124,715												
4/4/07 10:32	137,137												
4/11/07 10:20	151,169												
4/18/07 9:05	164,846												
4/25/07 11:23	178,890	<0.20	<5.0	0.71	0.77	46	<0.10	47	<0.10	3.2	9.2	<20	<2(
4/25/07 11:23	178,890												
5/2/07 10:34	193,212												
5/9/07 10:00	207,542												
5/16/07 11:52	219,846												

Date / Time	Number of Bed Volumes	Total Ag	Total Al	Dissolved As	Total As	Total Ba	Total Be	Total Ca	Total Cd	Total Cr	Total Cu	Dissolved Fe	Total Fe
Unit:	**(BVs)**	ug/L	ug/L	µg/l	µg/l	ug/L	ug/L	mg/l	ug/L	ug/l	ug/L	ug/l	ug/
5/23/07 11:24	234,143	<0.20	47		0.73	43	<0.10		<0.10	3.3	19	<20	<20
5/30/07 11:08	249,116												
5/30/07 11:08	249,116												
6/8/07 11:08	267,967												
8/10/07 16:45	0	<0.20	28		<0.40	40		45	<0.10	0.99	7.9	<20	92
8/31/07 13:05	20,252											<20	<20
8/31/07 13:05	20,252												
9/5/07 10:16	30,295											<20	<20
9/12/07 14:25	44,970											<20	<20
9/19/07 12:45	59,218	<0.20	<5.0		0.70	45	<0.10	45	<0.10	3.2	10	<20	<20
9/26/07 13:55	71,408												
10/3/07 12:50	83,238												
10/10/07 15:49	99,295												
10/10/07 15:49	99,295												
10/17/07 13:05	114,929	<0.20	7.6		0.66	42	<0.10	46	<0.10	3.1	15	<20	<20
10/19/07 9:44	119,160												
10/24/07 13:54	131,148												
10/24/07 13:54	131,148												
10/31/07 11:33	147,346												
11/9/07 7:38	166,760												
11/14/07 12:30	177,050	<0.20	7.9		0.64	45	<0.10	47	<0.10	3.1	15	<20	<20
11/14/07 12:30	177,050												
11/21/07 11:27	191,103												
11/26/07 11:25	201,942												
1/2/08 13:47	0	<0.20	<5.0		<0.40	41	<0.10	48	<0.10	<0.20	15	<20	<20
1/2/08 13:52	9												
1/2/08 13:57	18												
1/2/08 14:17	55												
1/4/08 10:51	4,784												
1/9/08 12:33	16,991											<20	<20
1/9/08 12:33	16,991												
1/16/08 14:15	33,680											<20	<20
1/23/08 13:08	50,139											<20	<20
1/23/08 13:08	50,139												
1/30/08 8:07	66,304	<0.20	11		0.63	44	<0.10	47	<0.10	3.0	11	<20	40
2/4/08 10:04	78,458												
2/11/08 11:52	95,335												
2/15/08 13:47	105,438												
2/20/08 12:54	117,487												
2/22/08 10:05	122,036												

Date / Time	Number of Bed Volumes	Total Ag	Total Al	Dissolved As	Total As	Total Ba	Total Be	Total Ca	Total Cd	Total Cr	Total Cu	Dissolved Fe	Total Fe
Unit:	**(BVs)**	ug/L	ug/L	µg/l	µg/l	ug/L	ug/L	mg/l	ug/L	ug/l	ug/L	ug/l	ug/l
2/27/08 8:40	134,028	<0.20	<5.0		0.71	39	<0.10	46	<0.10	2.7	3.3	<20	<20
2/27/08 8:40	134,028												
3/3/08 13:45	146,639												
3/3/08 13:45	146,639												
3/12/08 10:04	167,816												
3/17/08 11:17	179,959												
3/28/08 11:00	206,681	<0.20	<5.0		0.78	50	<0.10	47	<0.10	3.3	23	<20	<20
3/28/08 11:00	206,681												
3/31/08 11:33	214,172												
3/31/08 11:33	214,172												
4/7/08 11:05	230,415												
4/14/08 12:43	246,639												
7/24/08 11:30	0				<0.40			47				<20	<10
7/24/08 11:35													
7/24/08 11:50													
7/28/08 9:49	9,073												
7/31/08 11:43	16,503											<20	<10
8/7/08 8:41	32,575											<20	<10
8/7/08 8:41	32,575												
8/14/08 12:09	49,414											<20	<10
8/21/08 11:42	65,892	<0.20	5.7		0.84	43	<0.10		<0.10	3.3	3.5	<20	
8/28/08 11:26	82,404												
9/4/08 9:35	98,773												
9/11/08 7:18	115,424												
9/11/08 7:18	115,424												
9/18/08 11:53	132,286	<0.20	<5.0		0.68	41	<0.10	45	<0.10	3.2	9.6	<20	<10
9/25/08 7:02	148,250												
9/25/08 7:02	148,250												
10/2/08 9:27	164,794												
10/2/08 9:27	164,794												
10/9/08 10:08	181,208												
10/9/08 10:08	181,208												
10/24/08 11:40	204,093	<0.20	5.0		0.67	38	<0.10	48	<0.10	3.4	7.5	<20	<10
10/24/08 11:40	204,093	<0.20	<5.0		0.65	38	<0.10	47	<0.10	3.3	7.6	<20	<10
10/30/08 9:54	218,394												
11/6/08 9:54	234,636												
11/13/08 10:26	251,133												
11/25/08 13:39	263,504	<0.20	7.8		0.78	41	<0.10	46	<0.10	3.0	3.8	<20	<10
11/25/08 13:39	263,504												
12/4/08 11:19	284,584												

Date / Time	Number of Bed Volumes	Total Hg	K	Total Mg	Dissolved Mn	Total Mn	Na	Total Ni	Total Pb	Total Sb (antimony)	Total Se	Total Tl (thallium)
Unit:	**(BVs)**	ug/L	mg/l	mg/l	ug/l	ug/l	mg/l	ug/l	ug/l	ug/l	ug/l	ug/l
1/17/07 15:30												
1/17/07 15:31	2.6											
1/17/07 15:32	4.8											
1/17/07 15:34	6.9											
1/17/07 15:35	10											
1/17/07 15:39	17											
1/17/07 15:51	26											
1/17/07 16:01	39											
1/17/07 16:01	39	<0.10			<0.20	<0.20		<5.0	<5.0	<10	76	<50
1/18/07 12:42	1,551											
1/20/07 8:15	4,994											
1/23/07 11:30	10,739											
1/24/07 11:15	12,607											
1/26/07 9:15	16,068											
1/31/07 11:20	25,231											
1/31/07 11:20	25,231											
2/2/07 9:00	28,742											
2/5/07 11:02	34,468											
2/7/07 9:45	38,173											
2/12/07 9:45	47,327											
2/14/07 9:45	51,159											
2/21/07 9:13	60,236				<10	<10		<5.0	<5.0	<10	<30	<50
2/22/07 12:37	62,084											
2/28/07 10:59	71,248											
3/7/07 10:11	84,060											
3/14/07 9:57	96,689											
3/21/07 10:49	109,950	<0.10			<10	<10		<5.0	<5.0	<10	<30	<50
3/28/07 10:13	122,719											
3/29/07 10:30	124,715											
4/4/07 10:32	137,137											
4/11/07 10:20	151,169											
4/18/07 9:05	164,846											
4/25/07 11:23	178,890	<0.10	1.8		<0.20	<0.20	25	<0.80	0.29	<0.50	0.70	<0.20
4/25/07 11:23	178,890											
5/2/07 10:34	193,212											
5/9/07 10:00	207,542											
5/16/07 11:52	219,846											

Date / Time	Number of Bed Volumes	Total Hg	K	Total Mg	Dissolved Mn	Total Mn	Na	Total Ni	Total Pb	Total Sb (antimony)	Total Se	Total Tl (thallium)
Unit:	**(BVs)**	ug/L	mg/l	mg/l	ug/l	ug/l	mg/l	ug/l	ug/l	ug/l	ug/l	ug/l
5/23/07 11:24	234,143	<0.10			<10	<0.20		<0.80	0.49	<0.50	0.70	<0.20
5/30/07 11:08	249,116											
5/30/07 11:08	249,116											
6/8/07 11:08	267,967											
8/10/07 16:45	0	<0.10	1.8		<0.20	0.75	25	0.83	0.83	0.52	<0.40	<0.20
8/31/07 13:05	20,252											
8/31/07 13:05	20,252											
9/5/07 10:16	30,295											
9/12/07 14:25	44,970											
9/19/07 12:45	59,218	<0.10	1.7		<0.20	<0.20	25	<0.80	0.35	<0.50	0.73	<0.20
9/26/07 13:55	71,408											
10/3/07 12:50	83,238											
10/10/07 15:49	99,295											
10/10/07 15:49	99,295											
10/17/07 13:05	114,929	<0.10	1.9		<0.20	<0.20	25	<0.80	0.45	<0.50	0.61	<0.20
10/19/07 9:44	119,160											
10/24/07 13:54	131,148											
10/24/07 13:54	131,148											
10/31/07 11:33	147,346											
11/9/07 7:38	166,760											
11/14/07 12:30	177,050	<0.10	1.8		<5.0	<0.20	25	0.80	0.51	<0.50	0.77	<0.20
11/14/07 12:30	177,050											
11/21/07 11:27	191,103											
11/26/07 11:25	201,942											
1/2/08 13:47	0	<0.10	1.8		<5.0	<0.20	26	<0.80	0.57	<0.50	<0.40	<0.20
1/2/08 13:52	9											
1/2/08 13:57	18											
1/2/08 14:17	55											
1/4/08 10:51	4,784											
1/9/08 12:33	16,991											
1/9/08 12:33	16,991											
1/16/08 14:15	33,680											
1/23/08 13:08	50,139											
1/23/08 13:08	50,139											
1/30/08 8:07	66,304	<0.10	1.9		<0.20	0.40	26	0.97	0.41	<0.50	0.63	<0.20
2/4/08 10:04	78,458											
2/11/08 11:52	95,335											
2/15/08 13:47	105,438											
2/20/08 12:54	117,487											
2/22/08 10:05	122,036											

Date / Time	Number of Bed Volumes	Total Hg	K	Total Mg	Dissolved Mn	Total Mn	Na	Total Ni	Total Pb	Total Sb (antimony)	Total Se	Total Tl (thallium)
Unit:	**(BVs)**	ug/L	mg /l	mg /l	ug/l	ug/l	mg/l	ug/l	ug/l	ug/l	ug/l	ug/l
2/27/08 8:40	134,028		1.7	9.7	<0.20	<0.20	24	<0.80	<0.20	<0.50	<0.40	<0.20
2/27/08 8:40	134,028											
3/3/08 13:45	146,639											
3/3/08 13:45	146,639											
3/12/08 10:04	167,816											
3/17/08 11:17	179,959											
3/28/08 11:00	206,681		1.8		<0.20	<0.20	26	<0.80	0.74	<0.50	0.83	<0.20
3/28/08 11:00	206,681											
3/31/08 11:33	214,172											
3/31/08 11:33	214,172											
4/7/08 11:05	230,415											
4/14/08 12:43	246,639											
7/24/08 11:30	0		2.0		<0.20	<0.20	24					
7/24/08 11:35												
7/24/08 11:50												
7/28/08 9:49	9,073											
7/31/08 11:43	16,503											
8/7/08 8:41	32,575											
8/7/08 8:41	32,575											
8/14/08 12:09	49,414											
8/21/08 11:42	65,892	<.050			<0.20	<0.20		<0.80	<0.20	<0.50	0.51	<0.20
8/28/08 11:26	82,404											
9/4/08 9:35	98,773											
9/11/08 7:18	115,424											
9/11/08 7:18	115,424											
9/18/08 11:53	132,286		1.9		<5.0	<0.20	24	<0.80	0.30	<0.50	0.90	<0.20
9/25/08 7:02	148,250											
9/25/08 7:02	148,250											
10/2/08 9:27	164,794											
10/2/08 9:27	164,794											
10/9/08 10:08	181,208											
10/9/08 10:08	181,208											
10/24/08 11:40	204,093	<0.050	2.0		<0.20	<0.20	22	<0.80	0.29	<0.50	0.64	<0.20
10/24/08 11:40	204,093	<0.050	1.8		<0.20	<0.20	21	<0.80	0.31	<0.50	0.64	<0.20
10/30/08 9:54	218,394											
11/6/08 9:54	234,636											
11/13/08 10:26	251,133											
11/25/08 13:39	263,504	<0.050	1.9		<0.20	<0.20	25	<0.80	0.51	<0.50	0.66	<0.20
11/25/08 13:39	263,504											
12/4/08 11:19	284,584											

Date / Time	Number of Bed Volumes	Dissolved U	Total U	Total V	Total Zn	Gross Alpha	Radon
Unit:	**(BVs)**	ug/l	ug/l	ug/L	ug/l	pCi/L	pCi/L
1/17/07 15:30							
1/17/07 15:31	2.6						
1/17/07 15:32	4.8						
1/17/07 15:34	6.9						
1/17/07 15:35	10						
1/17/07 15:39	17						
1/17/07 15:51	26						
1/17/07 16:01	39						
1/17/07 16:01	39	<0.20	<0.20	<5.0	<50	0.0	
1/18/07 12:42	1,551						
1/20/07 8:15	4,994						
1/23/07 11:30	10,739						
1/24/07 11:15	12,607						
1/26/07 9:15	16,068						
1/31/07 11:20	25,231						
1/31/07 11:20	25,231						
2/2/07 9:00	28,742						
2/5/07 11:02	34,468						
2/7/07 9:45	38,173						
2/12/07 9:45	47,327						
2/14/07 9:45	51,159						
2/21/07 9:13	60,236	<0.20	<0.20	9.5	<50	0.0	
2/22/07 12:37	62,084						115
2/28/07 10:59	71,248						
3/7/07 10:11	84,060						
3/14/07 9:57	96,689						
3/21/07 10:49	109,950	0.47	0.48	10	<50	1.5	79
3/28/07 10:13	122,719						
3/29/07 10:30	124,715						
4/4/07 10:32	137,137						
4/11/07 10:20	151,169						
4/18/07 9:05	164,846						
4/25/07 11:23	178,890	1.4	1.4		9.7	0.58	
4/25/07 11:23	178,890						
5/2/07 10:34	193,212						
5/9/07 10:00	207,542						
5/16/07 11:52	219,846						

Date / Time	Number of Bed Volumes	Dissolved U	Total U	Total V	Total Zn	Gross Alpha	Radon
Unit:	**(BVs)**	ug/l	ug/l	ug/L	ug/l	pCi/L	pCi/L
5/23/07 11:24	234,143	1.9	2.0		15	3.1	
5/30/07 11:08	249,116						214
5/30/07 11:08	249,116						
6/8/07 11:08	267,967						
8/10/07 16:45	0	<0.20	<0.20		27	0	200
8/31/07 13:05	20,252						
8/31/07 13:05	20,252						
9/5/07 10:16	30,295						
9/12/07 14:25	44,970						
9/19/07 12:45	59,218	0.57	0.57		10	0	
9/26/07 13:55	71,408						
10/3/07 12:50	83,238						
10/10/07 15:49	99,295						
10/10/07 15:49	99,295						
10/17/07 13:05	114,929	1.7	1.6		17	4.9	
10/19/07 9:44	119,160						85
10/24/07 13:54	131,148						
10/24/07 13:54	131,148						
10/31/07 11:33	147,346						
11/9/07 7:38	166,760						
11/14/07 12:30	177,050	2.4	2.6		20	3.4	
11/14/07 12:30	177,050						
11/21/07 11:27	191,103						
11/26/07 11:25	201,942						
1/2/08 13:47	0	<0.20	<0.20		19	2.33	
1/2/08 13:52	9						
1/2/08 13:57	18						
1/2/08 14:17	55						
1/4/08 10:51	4,784						
1/9/08 12:33	16,991						
1/9/08 12:33	16,991						
1/16/08 14:15	33,680						
1/23/08 13:08	50,139						
1/23/08 13:08	50,139						
1/30/08 8:07	66,304	1.1	1.1		19	9.5	
2/4/08 10:04	78,458						
2/11/08 11:52	95,335						
2/15/08 13:47	105,438						
2/20/08 12:54	117,487						
2/22/08 10:05	122,036						

Date / Time	Number of Bed Volumes	Dissolved U	Total U	Total V	Total Zn	Gross Alpha	Radon
Unit:	**(BVs)**	ug/l	ug/l	ug/L	ug/l	pCi/L	pCi/L
2/27/08 8:40	134,028	2.2	2.2		7.0	3.4	<75
2/27/08 8:40	134,028						
3/3/08 13:45	146,639						
3/3/08 13:45	146,639						
3/12/08 10:04	167,816						
3/17/08 11:17	179,959						
3/28/08 11:00	206,681	2.5	2.7		16	4.6	
3/28/08 11:00	206,681						
3/31/08 11:33	214,172						
3/31/08 11:33	214,172						
4/7/08 11:05	230,415						
4/14/08 12:43	246,639						
7/24/08 11:30	0	<0.20				0.14	
7/24/08 11:35							
7/24/08 11:50							
7/28/08 9:49	9,073						
7/31/08 11:43	16,503						
8/7/08 8:41	32,575						
8/7/08 8:41	32,575						
8/14/08 12:09	49,414						
8/21/08 11:42	65,892	1.1	1.1		7.5	1.6	196
8/28/08 11:26	82,404						
9/4/08 9:35	98,773						
9/11/08 7:18	115,424						
9/11/08 7:18	115,424						
9/18/08 11:53	132,286	2.2	2.1		9.8	0	
9/25/08 7:02	148,250						<75
9/25/08 7:02	148,250						
10/2/08 9:27	164,794						
10/2/08 9:27	164,794						
10/9/08 10:08	181,208						
10/9/08 10:08	181,208						
10/24/08 11:40	204,093	1.8	1.9		8.8	0.296	149
10/24/08 11:40	204,093	1.8	1.8		8.6	0.587	
10/30/08 9:54	218,394						
11/6/08 9:54	234,636						
11/13/08 10:26	251,133						
11/25/08 13:39	263,504	2.3	2.4		9.2	0	
11/25/08 13:39	263,504						
12/4/08 11:19	284,584						

Effluent Volatile and Semi-Volatile Data

Date / Time	Number of Bed Volumes	Total VOCs	Total SVOCs	Bromodichloromethane	Bromoform	2-Butanone	Carbon tetrachloride	Chloroform	Dibromochloromethane	1,1-Dichloroethene	Trichlorethene
Unit:	**(BVs)**			ug/l	ug/l	ug/l	ug/l	ug/l	ug/l	ug/l	ug/l
1/17/07 15:30											
1/17/07 15:31	2.6										
1/17/07 15:32	4.8										
1/17/07 15:34	6.9										
1/17/07 15:35	10										
1/17/07 15:39	17										
1/17/07 15:51	26										
1/17/07 16:01	39										
1/17/07 16:01	39	ND	ND								
1/18/07 12:42	1,551										
1/20/07 8:15	4,994										
1/23/07 11:30	10,739										
1/24/07 11:15	12,607										
1/26/07 9:15	16,068										
1/31/07 11:20	25,231										
1/31/07 11:20	25,231										
2/2/07 9:00	28,742										
2/5/07 11:02	34,468										
2/7/07 9:45	38,173										
2/12/07 9:45	47,327										
2/14/07 9:45	51,159										
2/21/07 9:13	60,236	ND	ND								
2/22/07 12:37	62,084										
2/28/07 10:59	71,248										
3/7/07 10:11	84,060										
3/14/07 9:57	96,689										
3/21/07 10:49	109,950	ND	ND								
3/28/07 10:13	122,719										
3/29/07 10:30	124,715										
4/4/07 10:32	137,137										
4/11/07 10:20	151,169										
4/18/07 9:05	164,846										
4/25/07 11:23	178,890	ND	ND								
4/25/07 11:23	178,890										
5/2/07 10:34	193,212										
5/9/07 10:00	207,542										
5/16/07 11:52	219,846										

Date / Time	Number of Bed Volumes	Total VOCs	Total SVOCs	Bromodichloromethane	Bromoform	2-Butanone	Carbon tetrachloride	Chloroform	Dibromochloromethane	1,1-Dichloroethene	Trichlorethene
Unit:	**(BVs)**			ug/l	ug/l	ug/l	ug/l	ug/l	ug/l	ug/l	ug/l
5/23/07 11:24	234,143	ND	ND								
5/30/07 11:08	249,116										
5/30/07 11:08	249,116										
6/8/07 11:08	267,967										
8/10/07 16:45	0			3.3	1.4		4	47	3.4	0.5	1.4
8/31/07 13:05	20,252										
8/31/07 13:05	20,252										
9/5/07 10:16	30,295										
9/12/07 14:25	44,970										
9/19/07 12:45	59,218	ND	ND								
9/26/07 13:55	71,408										
10/3/07 12:50	83,238										
10/10/07 15:49	99,295										
10/10/07 15:49	99,295										
10/17/07 13:05	114,929			ND	ND		ND	ND	ND	ND	ND
10/19/07 9:44	119,160										
10/24/07 13:54	131,148										
10/24/07 13:54	131,148										
10/31/07 11:33	147,346										
11/9/07 7:38	166,760										
11/14/07 12:30	177,050	ND	ND								
11/14/07 12:30	177,050										
11/21/07 11:27	191,103										
11/26/07 11:25	201,942										
1/2/08 13:47	0	ND	ND								
1/2/08 13:52	9										
1/2/08 13:57	18										
1/2/08 14:17	55										
1/4/08 10:51	4,784	ND									
1/9/08 12:33	16,991	ND									
1/9/08 12:33	16,991										
1/16/08 14:15	33,680	ND									
1/23/08 13:08	50,139										
1/23/08 13:08	50,139										
1/30/08 8:07	66,304	ND									
2/4/08 10:04	78,458										
2/11/08 11:52	95,335										
2/15/08 13:47	105,438										
2/20/08 12:54	117,487										
2/22/08 10:05	122,036										

Date / Time	Number of Bed Volumes	Total VOCs	Total SVOCs	Bromodichloromethane	Bromoform	2-Butanone	Carbon tetrachloride	Chloroform	Dibromochloromethane	1,1-Dichloroethene	Trichlorethene
Unit:	**(BVs)**			ug/l	ug/l	ug/l	ug/l	ug/l	ug/l	ug/l	ug/l
2/27/08 8:40	134,028	ND									
2/27/08 8:40	134,028										
3/3/08 13:45	146,639										
3/3/08 13:45	146,639										
3/12/08 10:04	167,816										
3/17/08 11:17	179,959										
3/28/08 11:00	206,681	ND									
3/28/08 11:00	206,681										
3/31/08 11:33	214,172										
3/31/08 11:33	214,172										
4/7/08 11:05	230,415										
4/14/08 12:43	246,639										
7/24/08 11:30	0	ND									
7/24/08 11:35											
7/24/08 11:50		ND									
7/28/08 9:49	9,073	ND									
7/31/08 11:43	16,503	ND									
8/7/08 8:41	32,575										
8/7/08 8:41	32,575										
8/14/08 12:09	49,414										
8/21/08 11:42	65,892	ND									
8/28/08 11:26	82,404										
9/4/08 9:35	98,773										
9/11/08 7:18	115,424										
9/11/08 7:18	115,424										
9/18/08 11:53	132,286	ND									
9/25/08 7:02	148,250										
9/25/08 7:02	148,250										
10/2/08 9:27	164,794										
10/2/08 9:27	164,794										
10/9/08 10:08	181,208										
10/9/08 10:08	181,208										
10/24/08 11:40	204,093	*			0.37						
10/24/08 11:40	204,093	ND									
10/30/08 9:54	218,394										
11/6/08 9:54	234,636										
11/13/08 10:26	251,133										
11/25/08 13:39	263,504	*				11					
11/25/08 13:39	263,504										
12/4/08 11:19	284,584										

Appendix C3: Regeneration and Destruction Data

	Sample Name	Date Sampled	Perchlorate	Nitrate	Sulfate	pH	TDS	TOC
			ug/l	mg/l	mg/l	s.u.	mg/l	mg/l
1st Regen Round	Acid Wash Tank	10/29/2007	<1000	260	200	6.39	2200	14
	Barrel #2	7/19/2007	5300	9100	1500	1.16	180000	
	Barrel #3	7/19/2007	1000000	54000	540			
	Barrel #4	7/19/2007	2700000	5900	770	0.12	190000	
	Barrel #6	7/19/2007	38000	<10	1200			
	Barrel #8	7/19/2007	3000	<10	1300	0.00	190000	
	Tank D	7/19/2007	2100					
	Tank E	7/19/2007	520			0.00	190000	37
	Acid Rinse	7/19/2007				1.23	<10	4.7
	DI Rinse (first)	7/20/2007		<0.50	<0.50	2.47	<10	4.7
	Bicarbonate Rinse	7/24/2007		<0.50	0.69	8.09	7300	7.6
	DI Rinse (second)	7/21/2007	<2.0	<0.50	<0.50	6.38	23	0.45
2nd Regen Round	Dilute Acid Backwash	12/19/2007	<200	600	640	1.26	18000	7.8
	Tank A	12/19/2007						
	Tank C	12/21/2007	<4000	<1000	2700	<2	390000	8.1
	Regen Barrel 4	12/21/2007	4500	1000	2600	<2	250000	90
	Regen Drum-5 (from ESTCP#2)	7/11/2008						
	Regen Barrel 8	12/21/2007	240000	<1000	8300	<2	390000	47
	Tank D	12/21/2007	26000	<1000	3800	<2	400000	9.7
	Tank E	12/21/2007	7600	<1000	7100	<2	380000	5.8
	Acid Rinse Barrel 8	12/21/2007	<2000	<500	<500	1.41	74000	130
	2nd DI Rinse	12/19/2007	<2.0	<0.50	<0.50	4.77	<10	0.3
	DI Blank	12/19/2007	<2.0	<0.50	<0.50	4.9	<10	0.32
3rd Regen Round	Pittsburgh Water Blank	6/6/2008	<2.0	0.5	11	7.76	250	<0.30
	Backwash Initial (from ESTCP #3)	7/11/2008						
	Acid Wash(Pre Regen)(1st 2 BV)	6/23/2008						
	Acid Wash(Pre Regen)(BV 2-4)	6/23/2008						
	Acid Wash(Pre Regen)(BV 4-6)	6/23/2008						
	Acid Wash(Pre Regen)(BV 6-8)	6/23/2008						
	Acid Wash(Pre Regen)(BV 8-10)	6/23/2008						
	0.1N Acid Wash Comp (BV1-10)	7/9/2008	260	1000	1400	<2	640	20
	Reactor Composite (21+22+26)	6/9/2008						
	Regen Solutions #5(Drum-9)	6/9/2008						
	Reactor Tank(Comp)(6/16-19/08)	6/24/2008						
	Regen Drum-2 (from ESTCP#3)	7/11/2008						
	Regen Drum-5 (from ESTCP#3)	7/11/2008						
	Regen Composite (Drum 3->10)	7/9/2008	140000	10000	5900	<2	90000	58
	Tank-E Composite (BV5+6)	7/10/2008	22000	170	4400	<2	130000	21
	Rinse Composite (1->8)	7/9/2008	7700	91	3700	<2	110000	7.6
	Final Tap H2O Rinse	7/9/2008	<2.0	<0.50	90	8.11	600	<0.30

	Sample Name	Chloride	Fluoride	N-Nitrosodimethylamine	N-Nitrosomethylethylamine	N-Nitrosodiethylamine	N-Nitrosodi-n-propylamine	N-Nitrosomorpholine	N-Nitrosopyrrolidine	N-Nitrosopiperidine	N-Nitrosodi-n-butylamine
		mg/l	mg/l	ng/l	ng/l	ng/l	ng/l	ng/l	ng/l	ng/l	ng/l
1st Regen Round	Acid Wash Tank	750	<20	2.5	<2.0	<2.0	<2.0	<2.0	<2.0	<2.0	13
	Barrel #2										
	Barrel #3										
	Barrel #4										
	Barrel #6										
	Barrel #8										
	Tank D										
	Tank E	300000	<20	16	7.1	17	<2.0	<2.0	<2.0	220	3.1
	Acid Rinse	7100	<20	27	<4.0	42	<4.0	<4.0	<4.0	<4.0	<4.0
	DI Rinse (first)	110	<0.10	12	<2.0	4.0	<2.0	<2.0	<2.0	12	2.8
	Bicarbonate Rinse	2100	<0.10	12	<2.0	6.2	<2.0	<2.0	<2.0	16	52
	DI Rinse (second)	2.9	<0.10	14	<2.0	3.0	<2.0	<2.0	<2.0	19	2.5
2nd Regen Round	Dilute Acid Backwash	2300	<10	<2.0	<2.0	<2.0	<2.0	<2.0	<2.0	<2.0	<2.0
	Tank A										
	Tank C	280000	<200	<2.0	<2.0	<2.0	<2.0	<2.0	<2.0	<2.0	<2.0
	Regen Barrel 4	18000	<100								
	Regen Drum-5 (from ESTCP#2)			310	<10	56	<10	270	87	15	730
	Regen Barrel 8	260000	<200								
	Tank D	270000	<200								
	Tank E	270000	<200	<2.0	<2.0	<2.0	<2.0	<2.0	<2.0	<2.0	<2.0
	Acid Rinse Barrel 8	31000	<100	<2.0	<2.0	<2.0	<2.0	<2.0	<2.0	<2.0	<2.0
	2nd DI Rinse	1.4	<0.10	4.6	<2.0	<2.0	<2.0	<2.0	<2.0	<2.0	6.7
	DI Blank	<0.50	<0.10	<2.0	<2.0	<2.0	<2.0	<2.0	<2.0	<2.0	<2.0
3rd Regen Round	Pittsburgh Water Blank	16	0.49	<2.0	<2.0	<2.0	<2.0	14	<2.0	<2.0	<2.0
	Backwash Initial (from ESTCP #3)			2	<2.0	<2.0	<2.0	9	<2.0	<2.0	3.7
	Acid Wash(Pre Regen)(1st 2 BV)										
	Acid Wash(Pre Regen)(BV 2-4)										
	Acid Wash(Pre Regen)(BV 4-6)										
	Acid Wash(Pre Regen)(BV 6-8)										
	Acid Wash(Pre Regen)(BV 8-10)										
	0.1N Acid Wash Comp (BV1-10)	3000	<5.0	100	<20	40	<20	99	<20	52	55
	Reactor Composite (21+22+26)			64	<2.0	150	<2.0	240	<2.0	13	550
	Regen Solutions #5(Drum-9)			110	<2.0	160	<2.0	220	<2.0	12	660
	Reactor Tank(Comp)(6/16-19/08)			4300	<100	1500	<100	6400	<100	150	230
	Regen Drum-2 (from ESTCP#3)										
	Regen Drum-5 (from ESTCP#3)			2500	<20	250	76	1100	230	250	190
	Regen Composite (Drum 3->10)	230000	<100	220	<2.0	34	<2.0	45	11	21	26
	Tank-E Composite (BV5+6)	290000	<100	2300	<20	37	<20	48	<20	40	28
	Rinse Composite (1->8)	230000	<100	1500	<20	440	<20	1200	<20	87	69
	Final Tap H2O Rinse	54	0.86	<2.0	<2.0	<2.0	<2.0	2.9	<2.0	<2.0	2.6

	Sample Name	Organophosphorous Pesticides	**Total SVOCs**	Benzyl alcohol	Bis(2-chloroethyl)ether	Bis(2-ethylhexl)phthalate	Diethylphtalate
		µg/l	µg/l	µg/l	µg/l	µg/l	µg/l
1st Regen Round	Acid Wash Tank		ND	<5.0	<5.0	<5.0	<5.0
	Barrel #2						
	Barrel #3						
	Barrel #4						
	Barrel #6						
	Barrel #8						
	Tank D						
	Tank E		ND	<100	<100	<100	<100
	Acid Rinse						
	DI Rinse (first)		ND			<5.0	<5.0
	Bicarbonate Rinse		ND			<3.0	<5.0
	DI Rinse (second)		ND			<3.0	<5.0
2nd Regen Round	Dilute Acid Backwash		ND	<5.0	<5.0	<5.0	<5.0
	Tank A						
	Tank C		ND	<100	<100	<100	<100
	Regen Barrel 4						
	Regen Drum-5 (from ESTCP#2)						
	Regen Barrel 8						
	Tank D						
	Tank E		ND	<100	<100	<100	<100
	Acid Rinse Barrel 8						
	2nd DI Rinse		ND	<5.0	<5.0	<5.0	<5.0
	DI Blank		ND	<5.0	<5.0	<5.0	<5.0
3rd Regen Round	Pittsburgh Water Blank	<0.15	*	<5.0	<5.0	15	<5.0
	Backwash Initial (from ESTCP #3)						
	Acid Wash(Pre Regen)(1st 2 BV)						
	Acid Wash(Pre Regen)(BV 2-4)						
	Acid Wash(Pre Regen)(BV 4-6)						
	Acid Wash(Pre Regen)(BV 6-8)						
	Acid Wash(Pre Regen)(BV 8-10)						
	0.1N Acid Wash Comp (BV1-10)	<0.15	ND	<5.0	<5.0	<5.0	<5.0
	Reactor Composite (21+22+26)						
	Regen Solutions #5(Drum-9)						
	Reactor Tank(Comp)(6/16-19/08)		*	150	<40	<40	<40
	Regen Drum-2 (from ESTCP#3)						
	Regen Drum-5 (from ESTCP#3)						
	Regen Composite (Drum 3->10)	<15	ND	<500	<500	<500	<500
	Tank-E Composite (BV5+6)	<15	ND	<500	<500	<500	<500
	Rinse Composite (1->8)	<15	ND	<500	<500	<500	<500
	Final Tap H2O Rinse	<0.15	ND	<5.0	<5.0	<5.0	<5.0

	Sample Name	**Total VOCs**	1,2,3-Trichlorobenzene	1,2,4-Trichlorobenzene	2-Butanone	Chloromethane	Methylene Chloride	Chloroform	Chloroethane	Carbon tetrachloride
		µg/l	µg/l	µg/l	µg/l	µg/l	µg/l	µg/l	µg/l	µg/l
1st Regen Round	Acid Wash Tank	ND	<0.50	<0.50	<5.0	<0.50	<0.50	<0.50	<0.50	<0.50
	Barrel #2									
	Barrel #3									
	Barrel #4									
	Barrel #6									
	Barrel #8									
	Tank D									
	Tank E	*	<5.0	<5.0	<50	47	<5.0	<5.0	<5.0	<5.0
	Acid Rinse									
	DI Rinse (first)	*	<0.50	<0.50	<5.0	1.2	0.59	120	<0.50	<0.50
	Bicarbonate Rinse	*	<0.50	<0.50	<5.0	0.67	<0.50	120	<0.50	3.0
	DI Rinse (second)	*	<0.50	<0.50	<5.0	<0.50	<0.50	64	<0.50	3.0
2nd Regen Round	Dilute Acid Backwash	*	<0.50	<0.50	<5.0	<0.50	1.3	<0.50	<0.50	<0.50
	Tank A	*	<10	<10	<100	470	<10	<10	10	<10
	Tank C									
	Regen Barrel 4									
	Regen Drum-5 (from ESTCP#2)									
	Regen Barrel 8	*	<10	<10	<100	200	<10	<10	<10	<10
	Tank D									
	Tank E									
	Acid Rinse Barrel 8									
	2nd DI Rinse	*	<0.50	<0.50	<5.0	1.7	<0.50	9.8	<0.50	<0.50
	DI Blank	ND	<0.50	<0.50	<5.0	<0.50	<0.50	<0.50	<0.50	<0.50
3rd Regen Round	Pittsburgh Water Blank	ND	<0.50	<0.50	<5.0	<0.50	<0.50	<0.50	<0.50	<0.50
	Backwash Initial (from ESTCP #3)	*	<2.5	<2.5	<25	<2.5	<2.5	<2.5	<2.5	<2.5
	Acid Wash(Pre Regen)(1st 2 BV)									
	Acid Wash(Pre Regen)(BV 2-4)									
	Acid Wash(Pre Regen)(BV 4-6)									
	Acid Wash(Pre Regen)(BV 6-8)									
	Acid Wash(Pre Regen)(BV 8-10)									
	0.1N Acid Wash Comp (BV1-10)	ND	<10	<10	<100	<10	<10	<10	<10	<10
	Reactor Composite (21+22+26)	*	<2.5	<2.5	<25	160	3.1	2.4	<2.5	<2.5
	Regen Solutions #5(Drum-9)	*	<25	<25	<250	850	<25	<25	<25	<25
	Reactor Tank(Comp)(6/16-19/08)	ND	<10	<10	<100	<10	<10	<10	<10	<10
	Regen Drum-2 (from ESTCP#3)	*	<2.5	<2.5	<25	<2.5	<2.5	<2.5	<2.5	<2.5
	Regen Drum-5 (from ESTCP#3)									
	Regen Composite (Drum 3->10)	*	<10	<10	<100	140	<10	<10	<10	<10
	Tank-E Composite (BV5+6)	*	<10	<10	<100	56	<10	<10	<10	<10
	Rinse Composite (1->8)	*	<10	<10	<100	61	<10	<10	<10	<10
	Final Tap H2O Rinse	*	<0.50	<0.50	<5.0	<0.50	<0.50	<0.50	<0.50	<0.50

	Sample Name	Total VOCs	Bromodichloromethane	Dibromochloromethane	Bromoform	4-Methyl-2-pentanone	m,p-Xylene	o-Dichlorobenzene	Toluene
		µg/l	ug/l	µg/l	µg/l	µg/l	µg/l	µg/l	µg/l
1st Regen Round	Acid Wash Tank	ND	<0.50	<0.50	<5.0	<5.0	<0.50	<0.50	<0.50
	Barrel #2								
	Barrel #3								
	Barrel #4								
	Barrel #6								
	Barrel #8								
	Tank D								
	Tank E	*	<5.0	<5.0	<5.0	<50	<5.0	<5.0	<5.0
	Acid Rinse								
	DI Rinse (first)	*	1.8	1.1	0.6	<5.0	<0.50	<0.50	<0.50
	Bicarbonate Rinse	*	5.3	5.5	2.8	<5.0	<0.50	<0.50	<0.50
	DI Rinse (second)	*	3.6	3.8	2.2	<5.0	<0.50	<0.50	<0.50
2nd Regen Round	Dilute Acid Backwash	*	<0.50	<0.50	<0.50	<5.0	<1.0	<0.50	<0.50
	Tank A	*	<10	<10	<10	<100	<10	<10	<10
	Tank C								
	Regen Barrel 4								
	Regen Drum-5 (from ESTCP#2)								
	Regen Barrel 8	*	<10	<10	<10	<100	<20	<10	<10
	Tank D								
	Tank E								
	Acid Rinse Barrel 8								
	2nd DI Rinse	*	1.1	0.5	<0.50	<5.0	<1.0	<0.50	<0.50
	DI Blank	ND	<0.50	<0.50	<5.0	<5.0	<0.50	<0.50	<0.50
3rd Regen Round	Pittsburgh Water Blank	ND	<0.50	<0.50	<0.50	<5.0	<1.0	<0.50	<0.50
	Backwash Initial (from ESTCP #3)	*	<2.5	<2.5	<2.5	<25	<5.0	<2.5	3.2
	Acid Wash(Pre Regen)(1st 2 BV)								
	Acid Wash(Pre Regen)(BV 2-4)								
	Acid Wash(Pre Regen)(BV 4-6)								
	Acid Wash(Pre Regen)(BV 6-8)								
	Acid Wash(Pre Regen)(BV 8-10)								
	0.1N Acid Wash Comp (BV1-10)	ND	<10	<10	<10	<100	<20	<10	<10
	Reactor Composite (21+22+26)	*	0.8	<2.5	<2.5	<25	<5.0	<2.5	<2.5
	Regen Solutions #5(Drum-9)	*	<25	<25	<25	<250	<50	<25	<25
	Reactor Tank(Comp)(6/16-19/08)	ND	<10	<10	<10	<100	<20	<10	<10
	Regen Drum-2 (from ESTCP#3)	*	<2.5	<2.5	<2.5	<25	<5.0	<2.5	1.8J
	Regen Drum-5 (from ESTCP#3)								
	Regen Composite (Drum 3->10)	*	<10	<10	<10	<100	<20	<10	<10
	Tank-E Composite (BV5+6)	*	<10	<10	<10	<100	<20	<10	<10
	Rinse Composite (1->8)	*	<10	<10	<10	<100	<20	<10	<10
	Final Tap H2O Rinse	*	<0.50	<0.50	<0.50	<5.0	<1.0	<0.50	<0.50

	Sample Name	Total Al	Total Ag	Dissolved As	Total As	Total Ba	Total Be	Calcium	Total Cadmium	Total Cr
		ug/l	ug/l	ug/l	ug/l	ug/l	ug/l	mg/l	ug/l	ug/l
1st Regen Round	Acid Wash Tank	390	<0.20		8.9	18	0.1		<0.10	300
	Barrel #2									
	Barrel #3									
	Barrel #4									
	Barrel #6									
	Barrel #8									
	Tank D									
	Tank E	160000	<10	330	330	110	<5.0		<5.0	16000
	Acid Rinse									
	DI Rinse (first)									
	Bicarbonate Rinse									
	DI Rinse (second)	20	<0.20		<0.40	0.54	<0.10		<0.10	0.52
2nd Regen Round	Dilute Acid Backwash			3.5						
	Tank A									
	Tank C	39000	<40		640	220	<20	65	<20	31000
	Regen Barrel 4									
	Regen Drum-5 (from ESTCP#2)									
	Regen Barrel 8									
	Tank D									
	Tank E	39000	<40		610	210	<20	65	<20	31000
	Acid Rinse Barrel 8									
	2nd DI Rinse	<5.0	<0.20	<0.40	<0.40	<0.50	<0.10	1.6	<0.10	<0.20
	DI Blank	<5.0	<0.20	<0.40	<0.40	<0.50	<0.10	<0.10	<0.10	0.22
3rd Regen Round	Pittsburgh Water Blank	83	<0.20		41	88	<0.10		<0.10	<0.20
	Backwash Initial (from ESTCP #3)									
	Acid Wash(Pre Regen)(1st 2 BV)									
	Acid Wash(Pre Regen)(BV 2-4)									
	Acid Wash(Pre Regen)(BV 4-6)									
	Acid Wash(Pre Regen)(BV 6-8)									
	Acid Wash(Pre Regen)(BV 8-10)									
	0.1N Acid Wash Comp (BV1-10)	740	<1.0		62	100	<0.50		<0.50	320
	Reactor Composite (21+22+26)									
	Regen Solutions #5(Drum-9)									
	Reactor Tank(Comp)(6/16-19/08)									
	Regen Drum-2 (from ESTCP#3)									
	Regen Drum-5 (from ESTCP#3)									
	Regen Composite (Drum 3->10)	43000	75		760	270	<20		<20	36000
	Tank-E Composite (BV5+6)	50000	<40		820	250	<20		<20	42000
	Rinse Composite (1->8)	27000	<40		680	200	<20		<20	26000
	Final Tap H2O Rinse	80	<0.20		15	59	<0.10		<0.10	<0.10

	Sample Name	Total Cu	Dissolved Fe	Total Fe	Total Hg	Total K	Total Mn	Dissolved Mn	Total Na	
		ug/l	ug/l	ug/L	ug/l	ug/l	ug/l	ug/l	mg/l	u
1st Regen Round	Acid Wash Tank	57	<20	19000	0.14		56	57		
	Barrel #2									
	Barrel #3									
	Barrel #4									
	Barrel #6									
	Barrel #8									
	Tank D									
	Tank E	16000	7E+07	7E+07	38		240000			6
	Acid Rinse									
	DI Rinse (first)									
	Bicarbonate Rinse									
	DI Rinse (second)	<0.50		230	<0.10		0.71			<(
2nd Regen Round	Dilute Acid Backwash		11000	12000	<0.10			48		
	Tank A									
	Tank C	29000	6E+07	6E+07	260	<0.50	260000	250000	13	12
	Regen Barrel 4									
	Regen Drum-5 (from ESTCP#2)									
	Regen Barrel 8									
	Tank D									
	Tank E	28000	6E+07	6E+07	250	<0.50	250000	240000	18	12
	Acid Rinse Barrel 8									
	2nd DI Rinse	<0.50	170	470	<0.10	0.13	5.8	0.98	<0.50	<(
	DI Blank	1.1	<20	<20	<0.10	<0.10	<0.20	<0.20	<0.50	<(
3rd Regen Round	Pittsburgh Water Blank	<0.50	<20	<20	<0.050		9	9		9
	Backwash Initial (from ESTCP #3)									
	Acid Wash(Pre Regen)(1st 2 BV)									
	Acid Wash(Pre Regen)(BV 2-4)									
	Acid Wash(Pre Regen)(BV 4-6)									
	Acid Wash(Pre Regen)(BV 6-8)									
	Acid Wash(Pre Regen)(BV 8-10)									
	0.1N Acid Wash Comp (BV1-10)	110	3200	3100			88	88		
	Reactor Composite (21+22+26)									
	Regen Solutions #5(Drum-9)									
	Reactor Tank(Comp)(6/16-19/08)									
	Regen Drum-2 (from ESTCP#3)									
	Regen Drum-5 (from ESTCP#3)									
	Regen Composite (Drum 3->10)	34000	4E+07	4E+07			270000	260000		14
	Tank-E Composite (BV5+6)	34000	6E+07	6E+07			320000	320000		16
	Rinse Composite (1->8)	23000	5E+07	5E+07			190000	190000		9
	Final Tap H2O Rinse	<0.50	230	47			4.5	4.3		1

	Sample Name	Total Pb	Total Selenium	Total Sb (antimony)	Total Tantalum	Total Tl	Dissolved U	Total U	Total Zn	Gross Alpha
		ug/l	ug/l	ug/l	ug/l	ug/l	ug/l	ug/l	ug/l	pCi/L
1st Regen Round	Acid Wash Tank	23	16	<0.50		<0.20	2000	19000	34	4520
	Barrel #2									
	Barrel #3									
	Barrel #4									
	Barrel #6									
	Barrel #8									
	Tank D									
	Tank E	68	16	75		<10	32	32	3300	1100
	Acid Rinse									
	DI Rinse (first)									
	Bicarbonate Rinse									
	DI Rinse (second)	<0.20	<0.40	<0.50		<0.20		<0.20	<5.0	0
2nd Regen Round	Dilute Acid Backwash						13000	13000		4840
	Tank A									
	Tank C	120	<80	270	<250	<40	<100	<100	5800	550
	Regen Barrel 4									
	Regen Drum-5 (from ESTCP#2)									
	Regen Barrel 8									
	Tank D									
	Tank E	130	<80	340	<250	<40	<100	<100	5900	
	Acid Rinse Barrel 8									
	2nd DI Rinse	<0.20	<0.40	<0.50		<0.20	<0.20	<0.20	<5.0	1.6
	DI Blank	<0.20	<0.40	<0.50		<0.20	<0.20	<0.20	<5.0	1.9
3rd Regen Round	Pittsburgh Water Blank	<0.20	0.49	18		<0.20	0.86	0.85	<5.0	1.6
	Backwash Initial (from ESTCP #3)									
	Acid Wash(Pre Regen)(1st 2 BV)							74000		
	Acid Wash(Pre Regen)(BV 2-4)							27000		
	Acid Wash(Pre Regen)(BV 4-6)							520		
	Acid Wash(Pre Regen)(BV 6-8)							190		
	Acid Wash(Pre Regen)(BV 8-10)							180		
	0.1N Acid Wash Comp (BV1-10)	7.1	28	7.7		<1.0	20000	20000	43	11800
	Reactor Composite (21+22+26)									
	Regen Solutions #5(Drum-9)									
	Reactor Tank(Comp)(6/16-19/08)									
	Regen Drum-2 (from ESTCP#3)									
	Regen Drum-5 (from ESTCP#3)									
	Regen Composite (Drum 3->10)	150	<80	190		<40	280	290	5400	750
	Tank-E Composite (BV5+6)	160	<80	680		<40	180	180	6200	0.78
	Rinse Composite (1->8)	89	<80	230		<40	180	190	4100	1200
	Final Tap H2O Rinse	<0.20	<0.40	0.95		<0.20	<0.20	<0.20	<5.0	

Destruction Data

	Sample Name	Date Sampled	Perchlorate	Nitrate	Sulfate	pH	TDS	TOC
			ug/l	mg/l	mg/l		mg/l	mg/l
1st Destruction Round	DI Water	10/29/2007	<2.0	<0.50	<0.50	6.05	<10	<0.30
	Feedstock	10/15/2007	510000	5500	7400	2.00	220000	33
	10-12' Destruction Solution	10/12/2007	2900	1400	5500	2.00	220000	3.4
2nd Destruction Run	Reactor Feed (3/24/08)(13:00)	3/24/2008	380000	1900	4500	<2	730000	8.3
	Reactor Out (160/20)	3/19/2008	130000	340	4000	<2	670000	1.6
	Reactor Out(160/40)	3/20/2008	160000	560	2400	<2	610000	5.8
	Reactor Out (170/40)	3/20/2008	21000	480	5200	<2	520000	4.3
	Reactor Out(170/20)	3/21/2008	130000	810	5500	<2	600000	5.2
	Reactor Out(180/40)	3/24/2008	2900	590	13000	<2	560000	4.2
	Reactor Out(180/20)	3/24/2008	<10000	370	5100	<2	590000	4.2

	Sample Name	Chloride	Fluoride	N-Nitrosodimethylamine	N-Nitrosomethylethylamine	N-Nitrosodiethylamine	N-Nitrosodi-n-propylamine	N-Nitrosomorpholine	N-Nitrosopyrrolidine	N-Nitrosopiperidine	N-Nitrosodi-n-butylamine
		mg/l	mg/l	ng/l	ng/l	ng/l	ng/l	ng/l	ng/l	ng/l	ng/l
1st Destruction Round	DI Water	<0.50	<0.10	7.5	<2.0	<2.0	<2.0	<2.0	<2.0	<2.0	<2.0
	Feedstock	230000	<100	8400		890	8.9				
	10-12' Destruction Solution	230000	<100	420		28	<4				
2nd Destruction Run	Reactor Feed (3/24/08)(13:00)	280000	<200	4800	<100	530	<100	2000	<100	220	3300
	Reactor Out (160/20)	240000	<100	12	<2.0	<2.0	<2.0	<2.0	47	5.5	1400
	Reactor Out(160/40)	290000	<200	2100	<100	890	<100	1600	<100	<100	1600
	Reactor Out (170/40)	270000	<200	670	<2.0	2400	4.4	54	150	38	1100
	Reactor Out(170/20)	310000	<200	250	14	<10	<10	160	56	44	550
	Reactor Out(180/40)	240000	<200	<2.0	<2.0	<2.0	<2.0	<2.0	59	16	310
	Reactor Out(180/20)	300000	<200	180	<2.0	270	3	54	870	120	16000

	Sample Name	Organophosphorous Pesticides	**Total SVOCs**	Benzyl alcohol	Bis(2-chloroethyl)ether	Bis(2-ethylhexl)phthalate	Diethylphtalate
		µg/l	µg/l	µg/l	µg/l	µg/l	µg/l
1st Destruction Round	DI Water		ND	<5.0	<5.0	<5.0	<5.0
	Feedstock		ND	<5.0	<5.0	<5.0	<5.0
	10-12' Destruction Solution			<5.0	<5.0	7.0	5.0
2nd Destruction Run	Reactor Feed (3/24/08)(13:00)	<0.15	*	75	<50	100	<50
	Reactor Out (160/20)	<1.5	*	55	100	<50	<50
	Reactor Out(160/40)	<1.5	*	140	140	<50	<50
	Reactor Out (170/40)	<0.15	*	61	84	<50	<50
	Reactor Out(170/20)	<0.15	*	<50	210	<50	<50
	Reactor Out(180/40)	<0.15	*	130	70	<50	<50
	Reactor Out(180/20)	<0.15	*	95	95	<50	<50

	Sample Name	**Total VOCs**	1,2,3-Trichlorobenzene	1,2,4-Trichlorobenzene	2-Butanone	Chloromethane	Methylene Chloride	Chloroform	Chloroethane	Carbon tetrachloride	1,2-Dichloroethane	Bromomethane	Bromodichloromethane
		µg/l	µg/l	µg/l	µg/l	µg/l	µg/l	µg/l	µg/l	µg/l	µg/l	µg/l	ug/l
1st estruction Round	DI Water	ND	<0.50	<0.50	<5.0	<0.50	<0.50	<0.50	<0.50	<0.50	<0.50	<0.50	<0.50
	Feedstock	*	1.7	15	<5.0	47	<0.50	2.3	<0.50	<0.50	8	2.4	<0.50
	10-12' Destruction Solution	*	<10	<10	<100	3600	<10	<10	<10	<10	390	120	<10
2nd estruction Run	Reactor Feed (3/24/08)(13:00)	*	<10	<10	<100	23	<10	<10	<10	<10	13	<10	<10
	Reactor Out (160/20)	*	<10	<10	<100	1400	<10	<10	<10	<10	90	77	<10
	Reactor Out(160/40)	*	<10	<10	<100	1700	<10	<10	<10	<10	120	11	<10
	Reactor Out (170/40)	*	<10	<10	<100	1500	<10	<10	<10	<10	170	12	<10
	Reactor Out(170/20)	*	<10	<10	<100	1400	24	<10	<10	<10	160	61	<10
	Reactor Out(180/40)	*	<10	<10	<100	1500	<10	<10	<10	<10	190	52	<10
	Reactor Out(180/20)	*	<10	<10	<100	1900	<10	<10	<10	<10	220	26	<10

	Sample Name	**Total VOCs**	Dibromochloromethane	Bromoform	4-Methyl-2-pentanone	m,p-Xylene	o-Dichlorobenzene	Toluene
		µg/l	µg/l	µg/l	µg/l	µg/l	µg/l	µg/l
1st Destruction Round	DI Water	ND	<0.50	<5.0	<5.0	<0.50	<0.50	<0.50
	Feedstock	*	0.53	0.71	8.8	<1.0	2.9	<0.50
	10-12' Destruction Solution	*	<10	<10	<100	30	<10	<10
2nd Destruction Run	Reactor Feed (3/24/08)(13:00)	*	<10	<10	<100	<20	<10	<10
	Reactor Out (160/20)	*	<10	<10	<100	<20	<10	<10
	Reactor Out(160/40)	*	<10	<10	<100	<20	<10	<10
	Reactor Out (170/40)	*	<10	<10	<100	<20	<10	<10
	Reactor Out(170/20)	*	<10	<10	<100	<20	<10	<10
	Reactor Out(180/40)	*	<10	<10	<100	<20	<10	<10
	Reactor Out(180/20)	*	<10	<10	<100	<20	<10	<10

	Sample Name	Total Al	Total Ag	Dissolved As	Total As	Total Ba	Total Be	Calcium	Total Cadmium	Total Cr	Total Cu
		ug/l	ug/l	ug/l	ug/l	ug/l	ug/l	mg/l	ug/l	ug/l	ug/l
1st Destruction Round	DI Water	<5.0	<0.20		<0.40	<0.50	<0.10		<0.10	<0.20	<0.50
	Feedstock	77000	50		360	210	<20		6	49000	35000
	10-12' Destruction Solution	78000	52		380	210	<20		5	49000	36000
2nd Destruction Run	Reactor Feed (3/24/08)(13:00)	66000	<50		320	180	<25		<25	44000	31000
	Reactor Out (160/20)	61000	<80		570	200	<40		<40	38000	28000
	Reactor Out(160/40)	67000	<50		340	190	<25		<25	44000	32000
	Reactor Out (170/40)	65000	<50		340	180	<25		<25	43000	31000
	Reactor Out(170/20)	72000	<50		350	190	<25		<25	47000	33000
	Reactor Out(180/40)	60000	<50		310	170	<25		<25	40000	29000
	Reactor Out(180/20)	70000	<50		350	190	<25		<25	46000	33000

	Sample Name	Dissolved Fe	Total Fe	Total Hg	Total K	Total Mn	Dissolved Mn	Total Na	Total Ni	Total Pb	Total Selenium
		ug/l	ug/L	ug/l	ug/l	ug/l	ug/l	mg/l	ug/l	ug/l	ug/l
1st Destruction Round	DI Water	<20	<20	0.17		<5.0			<0.80	<0.20	<0.40
	Feedstock	8E+07	8E+07	3.5		420000	420000		18000	200	<20
	10-12' Destruction Solution	8E+07	8E+07	3.8		410000	400000		18000	200	<20
2nd Destruction Run	Reactor Feed (3/24/08)(13:00)	7E+07	7E+07	52		390000	390000		16000	180	<100
	Reactor Out (160/20)	8E+07	8E+07	40		330000	340000		15000	180	<160
	Reactor Out(160/40)	7E+07	8E+07	56		390000	370000		17000	170	<100
	Reactor Out (170/40)	7E+07	7E+07	54		380000	370000		16000	170	<100
	Reactor Out(170/20)	8E+07	8E+07	57		410000	390000		17000	180	<100
	Reactor Out(180/40)	7E+07	7E+07	47		350000	350000		15000	160	<100
	Reactor Out(180/20)	8E+07	8E+07	56		400000	400000		17000	190	<100

	Sample Name	Total Sb (antimony)	Total Tantalum	Total Tl	Dissolved U	Total U	Total Zn	Gross Alpha
		ug/l	ug/l	ug/l	ug/l	ug/l	ug/l	pCi/L
1st Destruction Round	DI Water	<0.50		<0.20		0.63	<5.0	
	Feedstock	1200		<10	150	150	3900	
	10-12' Destruction Solution	1200		<10	150	160	4200	
2nd Destruction Run	Reactor Feed (3/24/08)(13:00)	1100		<50	85	85	4000	1600
	Reactor Out (160/20)	1000		<80	80	80	5000	350
	Reactor Out(160/40)	1200		<50	82	88	4200	5300
	Reactor Out (170/40)	1200		<50	85	85	4100	1400
	Reactor Out(170/20)	1200		<50	88	95	4300	2000
	Reactor Out(180/40)	1000		<50	78	80	3700	2400
	Reactor Out(180/20)	1200		<50	90	92	4400	3800

Nitrosamine Detection Limits and Reporting Limits

ANALYTE	CASNUMBER	DL	RL	UNITS
N-Nitrosodimethylamine	62-75-9	0.40	2.0	ng/l
N-Nitrosomethylethylamine	10595-95-6	0.43	2.0	ng/l
N-Nitrosodiethylamine	55-18-5	0.70	2.0	ng/l
N-Nitrosodi-n-propylamine	621-64-7	0.51	2.0	ng/l
N-Nitrosomorpholine	59-89-2	0.78	2.0	ng/l
N-Nitrosopyrrolidine	930-55-2	0.20	2.0	ng/l
N-Nitrosopiperidine	100-75-4	0.43	2.0	ng/l
N-Nitrosodi-n-butylamine	924-16-3	0.50	2.0	ng/l

SVOC Detection Limits and Reporting Limits

ANALYTE	CASNUMBER	DL	RL	UNITS
Pyridine	110-86-1	0.49	5.0	ug/l
Bis(2-chloroisopropyl)ether	39638-32-9	0.48	5.0	ug/l
Aniline	62-53-3	0.63	5.0	ug/l
Benzyl alcohol	100-51-6	0.55	5.0	ug/l
3 & 4-Methylphenol	106-44-5	0.30	5.0	ug/l
N-Nitrosodi-n-propylamine	621-64-7	0.41	5.0	ug/l
Hexachloroethane	67-72-1	0.36	5.0	ug/l
Nitrobenzene	98-95-3	0.37	5.0	ug/l
Isophorone	78-59-1	0.33	5.0	ug/l
2-Nitrophenol	88-75-5	0.84	10	ug/l
2,4-Dimethylphenol	105-67-9	0.80	5.0	ug/l
Bis(2-chloroethoxy)methane	111-91-1	0.40	5.0	ug/l
2,4-Dichlorophenol	120-83-2	0.77	5.0	ug/l
N-Nitrosodimethylamine	62-75-9	0.36	5.0	ug/l
1,2,4-Trichlorobenzene	120-82-1	0.26	5.0	ug/l
Naphthalene	91-20-3	0.35	5.0	ug/l
4-Chloroaniline	106-47-8	1.1	5.0	ug/l
Benzoic acid	65-85-0	51	100	ug/l
Hexachlorobutadiene	87-68-3	0.41	5.0	ug/l
4-Chloro-3-methylphenol	59-50-7	0.40	5.0	ug/l
2-Methylnaphthalene	91-57-6	0.30	5.0	ug/l
Hexachlorocyclopentadiene	77-47-4	14	20	ug/l
2,4,6-Trichlorophenol	88-06-2	0.88	10	ug/l
2,4,5-Trichlorophenol	95-95-4	0.29	5.0	ug/l
Phenol	108-95-2	0.30	5.0	ug/l
2-Chloronaphthalene	91-58-7	0.26	5.0	ug/l
2-Nitroaniline	88-74-4	0.23	5.0	ug/l
Acenaphthylene	208-96-8	0.26	5.0	ug/l
Dimethyl phthalate	131-11-3	0.26	5.0	ug/l
2,6-Dinitrotoluene	606-20-2	0.24	5.0	ug/l
3-Nitroaniline	99-09-2	0.34	5.0	ug/l
Acenaphthene	83-32-9	0.31	5.0	ug/l
2,4-Dinitrophenol	51-28-5	1.4	10	ug/l
Dibenzofuran	132-64-9	0.33	5.0	ug/l
2,4-Dinitrotoluene	121-14-2	0.40	5.0	ug/l
Bis(2-chloroethyl)ether	111-44-4	0.46	5.0	ug/l
4-Nitrophenol	100-02-7	1.0	10	ug/l
Fluorene	86-73-7	0.28	5.0	ug/l
4-Chlorophenyl phenyl ether	7005-72-3	0.24	5.0	ug/l
Diethyl phthalate	84-66-2	0.23	5.0	ug/l
4-Nitroaniline	100-01-6	0.55	5.0	ug/l
N-Nitrosodiphenylamine	86-30-6	0.23	5.0	ug/l
4,6-Dinitro-2-methylphenol	534-52-1	0.33	10	ug/l
Azobenzene	103-33-3	0.30	5.0	ug/l
1,2-Diphenylhydrazine	122-66-7	0.30	5.0	ug/l

4-Bromophenyl phenyl ether	101-55-3	0.23	5.0	ug/l
2-Chlorophenol	95-57-8	0.71	5.0	ug/l
Hexachlorobenzene	118-74-1	0.15	5.0	ug/l
Pentachlorophenol	87-86-5	0.56	5.0	ug/l
Phenanthrene	85-01-8	0.25	5.0	ug/l
Anthracene	120-12-7	0.28	5.0	ug/l
Benzidine	92-87-5	3.2	10	ug/l
Di-n-butyl phthalate	84-74-2	0.53	5.0	ug/l
1,3-Dichlorobenzene	541-73-1	0.36	5.0	ug/l
Carbazole	86-74-8	0.50	5.0	ug/l
Fluoranthene	206-44-0	0.16	5.0	ug/l
Pyrene	129-00-0	0.16	5.0	ug/l
1,4-Dichlorobenzene	106-46-7	0.32	5.0	ug/l
Butyl benzyl phthalate	85-68-7	0.29	5.0	ug/l
Benzo (a) anthracene	56-55-3	0.19	5.0	ug/l
Chrysene	218-01-9	0.25	5.0	ug/l
3,3´-Dichlorobenzidine	91-94-1	1.5	5.0	ug/l
Bis(2-ethylhexyl)phthalate	117-81-7	0.21	5.0	ug/l
1,2-Dichlorobenzene	95-50-1	0.30	5.0	ug/l
Di-n-octyl phthalate	117-84-0	0.28	5.0	ug/l
Benzo (b) fluoranthene	205-99-2	0.16	5.0	ug/l
Benzo (k) fluoranthene	207-08-9	0.23	5.0	ug/l
Benzo (a) pyrene	50-32-8	0.20	5.0	ug/l
Indeno (1,2,3-cd) pyrene	193-39-5	0.32	5.0	ug/l
Dibenzo (a,h) anthracene	53-70-3	0.32	5.0	ug/l
Benzo (g,h,i) perylene	191-24-2	0.31	5.0	ug/l
2-Methylphenol	95-48-7	0.48	5.0	ug/l

VOC Detection Limits and Reporting Limits.

ANALYTE	CASNUMBER	DL	RL	UNITS
Methylene chloride	75-09-2	0.15	0.50	ug/l
trans-1,2-Dichloroethene	156-60-5	0.18	0.50	ug/l
Methyl tert-butyl ether (MTBE)	1634-04-4	1.1	3.0	ug/l
1,1-Dichloroethane	75-34-3	0.15	0.50	ug/l
Di-isopropyl ether	108-20-3	1.3	3.0	ug/l
Ethyl tert-butyl ether	637-92-3	1.3	3.0	ug/l
2-Butanone	78-93-3	1.9	5.0	ug/l
2,2-Dichloropropane	594-20-7	0.16	0.50	ug/l
cis-1,2-Dichloroethene	156-59-2	0.18	0.50	ug/l
Bromochloromethane	74-97-5	0.20	0.50	ug/l
Dichlorodifluoromethane (Freon 12)	75-71-8	0.26	0.50	ug/l
Chloroform	67-66-3	0.17	0.50	ug/l
1,1,1-Trichloroethane	71-55-6	0.15	0.50	ug/l
Carbon tetrachloride	56-23-5	0.18	0.50	ug/l
1,1-Dichloropropene	563-58-6	0.16	0.50	ug/l
Benzene	71-43-2	0.15	0.50	ug/l
1,2-Dichloroethane	107-06-2	0.14	0.50	ug/l
Tert-amyl methyl ether	994-05-8	1.2	3.0	ug/l
Trichloroethene	79-01-6	0.18	0.50	ug/l
1,2-Dichloropropane	78-87-5	0.15	0.50	ug/l
Chloromethane	74-87-3	0.20	0.50	ug/l
Dibromomethane	74-95-3	0.18	0.50	ug/l
Bromodichloromethane	75-27-4	0.13	0.50	ug/l
cis-1,3-Dichloropropene	10061-01-5	0.16	0.50	ug/l
4-Methyl-2-pentanone	108-10-1	1.5	5.0	ug/l
2-Chloroethyl vinyl ether	110-75-8	0.35	1.0	ug/l
Toluene	108-88-3	0.15	0.50	ug/l
trans-1,3-Dichloropropene	10061-02-6	0.17	0.50	ug/l
1,1,2-Trichloroethane	79-00-5	0.22	0.50	ug/l
Tetrachloroethene	127-18-4	0.26	0.50	ug/l
1,3-Dichloropropane	142-28-9	0.14	0.50	ug/l
Vinyl chloride	75-01-4	0.18	0.50	ug/l
Dibromochloromethane	124-48-1	0.19	0.50	ug/l
2-Hexanone	591-78-6	0.18	5.0	ug/l
Chlorobenzene	108-90-7	0.16	0.50	ug/l
1,1,1,2-Tetrachloroethane	630-20-6	0.17	0.50	ug/l
Ethylbenzene	100-41-4	0.17	0.50	ug/l
m,p-Xylene	1330-20-7	0.37	1.0	ug/l
o-Xylene	95-47-6	0.19	0.50	ug/l
Styrene	100-42-5	0.16	0.50	ug/l
Bromoform	75-25-2	0.17	0.50	ug/l
Bromomethane	74-83-9	0.21	0.50	ug/l
Isopropylbenzene	98-82-8	0.17	0.50	ug/l
Bromobenzene	108-86-1	0.18	0.50	ug/l
1,1,2,2-Tetrachloroethane	79-34-5	0.18	0.50	ug/l

1,2,3-Trichloropropane	96-18-4	0.15	0.50	ug/l
n-Propylbenzene	103-65-1	0.15	0.50	ug/l
2-Chlorotoluene	95-49-8	0.18	0.50	ug/l
4-Chlorotoluene	106-43-4	0.17	0.50	ug/l
1,3,5-Trimethylbenzene	108-67-8	0.15	0.50	ug/l
tert-Butylbenzene	98-06-6	0.14	0.50	ug/l
Chloroethane	75-00-3	0.18	0.50	ug/l
1,2,4-Trimethylbenzene	95-63-6	0.16	0.50	ug/l
sec-Butylbenzene	135-98-8	0.15	0.50	ug/l
m-Dichlorobenzene	541-73-1	0.21	0.50	ug/l
p-Isopropyltoluene	99-87-6	0.17	0.50	ug/l
p-Dichlorobenzene	106-46-7	0.17	0.50	ug/l
o-Dichlorobenzene	95-50-1	0.17	0.50	ug/l
n-Butylbenzene	104-51-8	0.15	0.50	ug/l
1,2,4-Trichlorobenzene	120-82-1	0.19	0.50	ug/l
Trichlorofluoromethane	75-69-4	0.20	5.0	ug/l
Hexachlorobutadiene	87-68-3	0.16	0.50	ug/l
Naphthalene	91-20-3	0.21	0.50	ug/l
1,2,3-Trichlorobenzene	87-61-6	0.16	0.50	ug/l
Xylenes (total)	1330-20-7	0.29	0.50	ug/l
1,3 Dichloropropene (Total)	542-75-6	0.10	0.50	ug/l
Freon 113	76-13-1	1.6	5.0	ug/l
1,1-Dichloroethene	75-35-4	0.21	0.50	ug/l

Appendix D: Weck Laboratory QA Program (see PDF)

Weck Laboratories, Inc.

Environmental and Analytical Services - Since 1964

Quality Assurance Program Manual

Facility Name:	**Weck Laboratories, Inc.**
Location:	**14859 E. Clark Ave., Industry, CA 91745**
Telephone:	**626-336-2139**

Revision 16
EFFECTIVE DATE: December 1, 2005
DATE OF SUBMITTAL: November 18, 2005

Approved by:

Alan Ching **QA Officer**	12-2-05 **Date**	626-336-2139 x116 **Telephone**
Alfredo Pierri **President/Laboratory Director**	12/2/05 **Date**	626-336-2139 x 111 **Telephone**
Joe Chau **Technical Director/Inorganic**	12-2-05 **Date**	626-336-2139 x109 **Telephone**
Hai-Van Nguyen **Technical Director/Micro**	12/2/05 **Date**	(626) 336-2139 x102 **Telephone**
Alan Ching **Technical Director/Organic**	12-2-05 **Date**	626-336-2139 x116 **Telephone**

☐ **Controlled copy** ☐ **Uncontrolled copy**
Copy No.:
Issued to:

Table of Contents

1. Introduction 1
   1.1. Mission Statement 1
   1.2. Services Provided 1
   1.3. Proficiency Testing 2
   1.4. Ethics Policy 2
2. Quality Policy 3
   2.1. QA Objectives for measuring data 3
   2.2. Resources 3
3. Description of the QAP Manual 3
   3.1. Terminology 3
   3.2. Scope 8
   3.3. Fields of Testing 8
   3.4. Management of the QAP Manual 8
4. Description of the Laboratory 8
   4.1. Identification 8
   4.2. Fields of Activity 9
   4.3. Organization Structure 9
5. Staff 9
   5.1. Management Personnel 9
   5.2. Personnel Qualifications 11
   5.3. Personnel Training 11
6. Laboratory Capabilities and Accreditations 12
7. Quality Assurance Objectives 13
   7.1. Precision 13
   7.2. Accuracy 14
   7.3. Representativeness 14
   7.4. Completeness 14
   7.5. Comparability 14
   7.6. Detection limits 14
8. Sampling 15
9. Sample Handling 15
   9.1. Sample tracking 15
   9.2. Review of Requests, Tenders and Contracts 15
   9.3. Sample acceptance policy 16
   9.4. Sample receipt protocol 17
   9.5. Storage conditions 18
   9.6. Custody of Samples and Documentation 18
   9.7. Sample Disposal 18
10. Calibration Procedures and Frequency 19
   10.1. Traceability of Calibration 19
      10.1.1. General 19
      10.1.2. Specific Requirements 19
   10.2. Reference Standards 20
   10.3. General Requirements 20

Table of Contents-continued

10.4. Analytical Support Equipment 20
10.4.1. Balances and Reference Weights....21
10.4.2. Thermometers 21
10.4.3. Monitoring of Temperature....21
10.5. Initial Instrument Calibration and Continuing Calibration Verification 21
11. Test Methods and Standard Operating Procedures....24
11.1. Test methods 24
11.1.1. Source of Methods 24
11.1.2. Validation of Methods 25
11.2. SOPs for Sample Management....26
11.3. SOPs for Reagent/Standard Preparation 26
11.4. SOP for General Laboratory Techniques 26
11.5. SOPs for Equipment Calibration and Maintenance 27
12. Quality Control Determinations 27
12.1. Essential QC Determinations....27
12.1.1. Blanks – Negative Controls 27
12.1.2. Reproducibility and Recovery Determinations – Positive Controls....28
12.1.2.1.Duplicates 28
12.1.2.2.Laboratory Control Samples (LCS)....28
12.1.2.3.Matrix Spikes and Matrix Spike Duplicates 30
12.1.2.4.Surrogates 31
12.1.2.5.Equations used for Calculations 32
12.1.2.6.Quality Control Charts....32
12.1.3. External References and Control Samples 32
12.2. Method Detection Limits and Reporting Limits....33
12.3. Selectivity....34
12.4. Demonstration of Method Capability....34
12.5. Performance and Proficiency Testing Program 35
12.6. Additional Quality Control Checks....35
12.7. Estimation of Uncertainty of Measurement....36
13. Data Reduction, Verification and Reporting....36
13.1. Laboratory Worksheets – Raw Data Documentation....36
13.2. Data Reduction and Review 36
13.3. Report Format and Contents 37
13.4. Records 38
13.4.1. Standard Operating Procedures....39
13.4.2. Equipment Maintenance Documentation 39
13.4.3. Calibration Records and Traceability of Standards/Reagents....39
13.4.4. Sample Management 39
13.4.5. Original Data 40
13.4.6. QC Data 40
13.4.7. Correspondence....40
13.4.8. Deviations....40
13.4.9. Final Reports 41
13.4.10.Administrative records....41
13.5. Document Control System....41
13.6. Confidentiality....41

Table of Contents-continued

13.7. Service to the Client 41
14. Performance and System Audits and Frequency 41
14.1. Internal Laboratory Audits 41
14.2. Management Review 42
15. Facilities, Equipment and Reagents 43
15.1. Facilities 43
15.2. Equipment Maintenance 43
15.3. Reagents and Chemicals 45
15.4. Analytical Standards and Reference Materials 45
15.5. Computers and Electronic Data Related Requirements 46
16. Specific Routine Procedures Used to Evaluate Data Quality 46
16.1. Laboratory Control Samples 47
16.2. Matrix Spikes/Matrix Spike Duplicates 47
16.3. Surrogate Recoveries 47
16.4. Method Blanks 47
17. Corrective Action and Preventive Action 47
17.1. Corrective Action 47
17.2. Preventive Action 49
18. Subcontracting and Support Services and Supplies 49
18.1. Subcontracted Laboratory Services 49
18.2. Outside Support Services and Supplies 50
19. References 50

Appendix 51

1 INTRODUCTION

Weck Laboratories is an independent testing laboratory specialized in environmental analytical services. The company was founded in 1964 and it is organized as a California corporation.

The purpose of the Weck Laboratories Quality Assurance Program is to operate under standardized QA procedures, to provide guidance to all personnel and it is designed to continually monitor the reliability of test results, ensuring that they fall within acceptable limits, and provide guidelines for the implementation of corrective action when necessary.

This Quality Assurance Manual is a summary document that outlines the policies and operational procedures associated with the facility of Weck Laboratories, Inc. in the City of Industry, California. It is intended to ensure the high quality of analytical services that the Laboratory is committed to provide to its clients. This Manual contains references to other supporting documents also related to the Quality Assurance Program, such as SOPs, QC acceptance limits, MDL studies, Performance Evaluation Results and Policy documents.

The QA Manual and its supporting documents are reviewed annually to ensure that they reflect current laboratory practices and are in agreement with current regulations.

All policies and procedures have been structured in accordance with the NELAC standards and applicable requirements, regulations, guidance, and technical standards from the USEPA and State regulatory agencies. This manual has been prepared in accordance with the guidance documents listed in section 19.

This Quality Manual, SOPs and related documentation describe the quality system for Weck Laboratories, Inc.

1.1 Mission Statement

Weck Laboratories provides qualitative and quantitative data for use in critical decisions relating to the protection of the public and the environment. The data used for such purposes must be scientifically valid, defensible and of known and documented quality in accordance with standards developed by the National Environmental Laboratory Accreditation Conference (NELAC) and any applicable State or EPA regulations or requirements.
It is our goal to provide our clients with the best possible services, in terms of quality of laboratory work, honesty in our procedures and reporting, efficiency in our turnaround time and reasonable prices for our services and at the same time satisfy the needs of the regulatory authorities and organizations providing recognition.
Top management of the laboratory is totally committed to the attainment of the best possible quality of data and instructs and educates the staff on this company policy.
All the necessary resources and materials shall be provided to the all the personnel of the laboratory in order to meet and/or improve the quality requirements of NELAC and consequently of ISO 9001 and 9002, of the analytical methods performed at the lab and any special requirements from clients.

1.2 Services provided

The services provided by this facility are the following:

- Organic chemical analyses
- Inorganic chemical analyses

- Trace metal analyses
- Microbiological analysis limited to total coliform, fecal coliform and standard plate count.
- Physical analyses
- Field services (sampling and simple field determinations)

The technical and service requirements for all requests to provide analyses are thoroughly evaluated before commitments are made to accept the work. This includes a review of facilities and instrumentation, staffing, and any special QC or reporting requirements to ensure that analyses can be performed within the expected schedule. All measurements are made using published reference methods or methods developed by Weck Laboratories. Competence with all methods is demonstrated according to the procedure described in Appendix 9 prior to use.

1.3 Proficiency Testing

Weck Laboratories, Inc. analyzes Proficiency Testing samples at a frequency established by the current regulations, typically two times per year, from an approved PT provider that meets the requirements specified in chapter 2 of the current NELAC standard. The specific analytes and matrices analyzed are based on the current scope of the laboratory services and are documented in a laboratory SOP on PT samples analyses.
The goal for PT results is obtaining 100% of all analytes within acceptable limits. When there are results out of the acceptance range, corrective action is initiated to prevent the error from reoccurring. A report with the documentation of the corrective action is also filed.

1.4 Ethics policy

Weck Laboratories, Inc. has developed a proactive program for prevention and detection of improper, unethical or illegal actions. A main component of this program is the periodic training and communications that the employees receive from management about the ethics policy and the utmost importance of an honest and ethical behavior in all activities performed at the laboratory.

Proper ethical conduct in the laboratory is strictly enforced. The Company's Code of Ethics (Appendix 2) is presented to current and prospective employees in both the QA manual and the Employee Handbook.

The Data Integrity Plan serves to combine the elements currently in place and document further procedures to ensure our compliance with requirements in the NELAC standard and from other regulatory agencies.

Each employee is required understand and sign a Data Integrity Agreement, contained in the Data Integrity Plan document. The Laboratory Ethics seminar that is presented as a refresher to current employees on an annual basis and as part of the hiring process for new employees include elements describing examples of improper and illegal actions, how to identify appropriate and inappropriate laboratory and instrument manipulation practices, guidance for manual integration practices and consequences of unethical or improper behavior.

Punishment for improper, illegal or unethical activities range from suspension to termination, depending on the degree and nature of the unethical activity.

Employees are required and encouraged to bring up to management any improper activities they detect or are suspicious of. Any incident reported is immediately investigated by the management and the person or persons involved are subject to disciplinary actions.

The Management shall also monitor the program for detecting improper, unethical or illegal action by performing internal proficiency testing (single or double blind), reviewing of analytical data post-analysis, performing electronic data audits using special software as Mint Miner® and providing an open door policy for employees to report any suspicious activity without fears.

In order to assist the laboratory technical personnel in performing their duties without detrimental influences, it is the policy of the Company that the laboratory be impartial and that it and its personnel are free from any undue commercial, financial and other pressures which might influence or adversely affect their normal performance having an impact on the quality of the work they produce or their technical judgment. By this policy all laboratory personnel dedicated to technical activities should not be influenced by, or involved in any financial or commercial matter while performing laboratory work. If any employee feels that he or she might be under any kind of pressure as described above, the Laboratory Director must be notified immediately. Additionally, the Laboratory will not engage in any activities that may endanger the trust in its independence of judgment and integrity in relation to its environmental testing.

2 QUALITY POLICY

2.1 QA objectives for measuring data

The objective of the Quality Assurance Program is to monitor the reliability of the analytical data produced by the Laboratory and to implement effectively the quality control procedures and operations defined for each analysis. The purposes of this program are:

- Provide data that is scientifically valid, defensible, and of known and documented quality in accordance with standards developed by the National Environmental Laboratory Accreditation Conference (NELAC) and any applicable state or EPA regulations or requirements.
- Ensure that analytical results fall between acceptable control limits.
- Provide mechanisms for corrective action when necessary.
- Establish standardized practices to provide consistency in the generation of data.
- Define the quality of each analytical system in terms of accuracy, precision and sensitivity.
- Identify in the early stages possible problems that may affect data quality.

2.2 Resources

The resources of Weck Laboratories are instrumental in implementing this policy. Highly trained personnel, including chemists and related scientists continue their education by attending seminars and technical meetings; instrumentation that is continuously upgraded to maintain the state-of-the-art in analytical instruments; and a facility currently consisting of 22,000 sq. ft. of laboratory area and it is distributed in a manner that minimizes laboratory contamination.

3 DESCRIPTION OF THE QAP MANUAL

3.1 Terminology

°C	Degrees Celsius
AA	Atomic Absorption
ANSI/ASQC	American National Standards Institute/American Society for Quality Control
ASQC	American Society for Quality Control
ASTM	American Society of Testing and Materials
Audit	A documented investigative evaluation used to determine the degree of compliance with established procedures and guidelines, applied to specific analytical processes.
BFB	Bromofluorobenzene
BNA	Base, neutral and acid
BOD	Biochemical Oxygen Demand
BS	Blank Spike, equivalent to LFB and LCS
BTEX	Benzene, toluene, ethyl benzene and xylene
CA	Corrective Action, the measures taken to correct a situation that is out of the control limits set by QC procedures
CAL	Calibration standard, a solution prepared from the dilution of stock standard solutions. The CAL solutions are used to calibrate the instrument response with respect to analyte concentration.
CARB	California Air Resources Board
CAS	Chemical Abstract Service
CATC	Cyanide amenable to chlorination
CCC	Calibration check compound
CCV	Continuing calibration verification
CFR	Code of Federal Regulations
CI	Chemical ionization
Cl2	Chlorine
CLP	Contract Laboratory Program
COC	Chain of custody
COD	Chemical oxygen demand
CRDL	Contract Required Detection Limit
CV	Coefficient of variation
CVAA	Cold Vapor Atomic Absorption Spectroscopy
DBCP	1,2-dibromo-3-chloropropane
DBF	Dibenzofurans
D/DBP	Disinfectants and disinfection by-products
DFTPP	Decafluorotriphenylphosphine
Dissolved	The concentration of analyte in an aqueous sample that will pass through a 0.45 µm membrane filter assembly prior to sample acidification.
DLR	Detection Limit for Reporting purposes, established by the California Department of Health Services for potable water analysis.
DO	Dissolved oxygen
DOC	Demonstration of capability
DOC	Dissolved Organic Carbon
DOE	Department of Energy
DOT	Department of Transportation

DOD	Department of Defense
DQIs	Data Quality Indicators
DQOs	Data Quality Objectives
DRO	Diesel-range organics
ECD	Electron capture detection
EDB	1,2-dibromoethane
EDD	Electronic data deliverable
EI	Electron impact ionization
ELAP	Environmental Laboratory Accreditation Program. A program managed by the State of California, Department of Health Services for accreditation of environmental testing laboratories.
EPA	United States Environmental Protection Agency
FIA	Flow-injection analysis
FID	Flame-ionization detection
FPD	Fame photometric detection
GC/MS	Gas chromatography/mass spectrometry
GFAA	Graphite Furnace Atomic Absorption Spectroscopy
GPC	Gel-permeation chromatography
GRO	Gasoline-range organics
HAA	Haloacetic acid
HAN	Haloacetonitrile
HDPE	High Density Polyethylene
HPLC	High Performance Liquid Chromatography
HRGC	High Resolution Gas Chromatography
HRMS	High Resolution Mass Spectrometry
IC	Ion chromatography
ICAP	Inductively Coupled Argon Plasma Spectroscopy
ICP	See ICAP
ICP-AES	See ICAP
ICP-MS	Inductively coupled plasma-mass spectrometer
ICV	Initial calibration verification
ICS	Interference check sample
IDL	Instrument Detection Limit
IEC	interelement correction factor
IPC	Instrument Performance Check Solution - A solution of the method analyte, used to evaluate the performance of the instrument system with respect to a defined set of method criteria.
ISE	Ion-selective electrode
ISO/IEC	International Standards Organization/International Electrotechnical Commission
LCL	Lower Control Limit
LCS	Laboratory control sample, equivalent to LFB.
LD1 and LD2	Laboratory Duplicates - Two aliquots of the same sample taken in the laboratory and analyzed separately with identical procedures. Analyses of LD1 and LD2 indicate precision associated with laboratory procedures, but not with sample collection, preservation, or storage procedures.
LDR	Linear Dynamic Range - The concentration range over which the instrument response to an analyte is linear.
LFB	Laboratory Fortified Blank - An aliquot of LRB to which known quantities of the method analytes are added in the laboratory. The LFB is analyzed exactly like a

	sample, and its purpose is to determine whether the methodology is in control and whether the laboratory is capable of making accurate and precise measurements.
LFM	Laboratory Fortified Sample Matrix (LFM) – Also known as Matrix Spike. An aliquot of an environmental sample to which a known quantity of the method analyte is added in the laboratory. The LFM is analyzed exactly like a sample, and its purpose is to determine whether the sample matrix contributes bias to the analytical results. The background concentration of the analyte in the sample matrix must be determined in a separate aliquot and the measured value in the LFM corrected for background concentration.
LIMS	Laboratory information management system
LLE	Liquid-liquid extraction
LOD	Limit of detection, equivalent to MDL
LOQ	Limit of quantitation, equivalent to RL, PQL and MRL
LRB	Laboratory Reagent Blank - An aliquot of reagent water or other blank matrices that are treated exactly as a sample including exposure to all glassware, equipment, solvents, reagents, and internal standards that are used with other samples. The LRB is used to determine if the method analyte or other interferences are present in the laboratory environment, reagents, or apparatus.
LWL	Lower Warning Limit
MBAS	Methylene Blue Active Substance
MDL	Method Detection Limit - The minimum concentration of an analyte that can be identified, measured, and reported with 99% confidence that the analyte concentration is greater than zero.
MEK	Methyl ethyl ketone
MRL	Method Reporting Limit, equivalent to RL and PQL
MS	Matrix spike
MSA	Method of standard additions
MSD	Mass-selective detection
MSD	Matrix spike duplicate
MSDS	Material Safety Data Sheet
MS/MS	Multistage mass spectrometry
MTBE	Methyl-tertiary-butyl ether
NELAC	National Environmental Laboratory Accreditation Conference
NELAP	National Environmental Laboratory Accreditation Program
NIOSH	National Institute for Occupational Safety and Health
NIST	National Institute for Standards and Technology
NPD	Nitrogen-phosphorus detection
NPDES	National Pollutant Discharge Elimination System
OCP	Organochlorine pesticides
OSHA	Occupational Safety and Health Administration
PAH	Polynuclear Aromatic Hydrocarbons (or PNA)
PBMS	Performance Based Measurement System
PC	Personal computer
PCBs	Polychlorinated biphenyls
PCDD	Polychlorinated dibenzo-p-dioxins
PCDF	Polychlorinated dibenzofurans
PID	Photoionization detection
PQL	Practical Quantitation Limit
PT	Proficiency Testing

RF	Response Factor
QA	Quality Assurance
QAP	Quality Assurance Program
QAPP	Quality Assurance Program Plan
QAPjP	Quality Assurance Project Plan
QC	Quality Control
QCS	Quality Control Sample - A solution of the method analyte of known concentration, which is used to fortify an aliquot of LRB or sample matrix. The QCS is obtained from a source external to the laboratory and different from the source of the calibration standards. It is used to check either laboratory or instrument performance.
RL	Reporting limit
RPD	Relative percent difference
RSD	Relative standard deviation
RT	Retention time
SCAQMD	South Coast Air Quality Management District
SI	International System of Units
SIM	Selected-ion monitoring
SOC	Synthetic organic chemical
SOP	Standard Operating Procedure
SPCC	System Performance Check Compounds
SPE	Solid-phase extraction
SPME	Solid-phase microextraction
SRM	Standard Reference Material
SUR	Surrogate compound,
SVOA	Semivolatile organics analysis
TCD	Thermal conductivity detection
TCDD	Tetrachlorodibenzodioxin
TCDF	Tetrachlorodibenzofuran
TCLP	Toxicity Characteristic Leaching Procedure
TDS	Total dissolved solids
TEM	Transmission electron microscopy
TIC	Tentatively identified compounds
TKN	Total Kjeldahl Nitrogen
TOC	Total Organic Carbon
TOX	Total Organic Halides
TPH	Total petroleum hydrocarbon
TPH-D	Total petroleum hydrocarbons as diesel
TRPH	Total recoverable petroleum hydrocarbon
TSS	Total suspended solids
UCL	Upper Control Limit
UV	Ultraviolet
UV/vis	Ultraviolet/visible-light
UWL	Upper Warning Limit
VOA	Volatile Organic Analyte
VOC	Volatile organic compound(s)
WET	Waste Extraction Test (California leaching test)
WET	Whole effluent toxicity
WP	Water Pollution Performance Evaluation Samples

WS	Water Supply Performance Evaluation Samples
ZHE	Zero-headspace extraction

Other terminology commonly used can be found in the glossary section of the NELAC standards.

3.2 Scope

The purpose of the Quality Assurance Program (QAP) described in this manual is to ensure the integrity of the data produced by the laboratory. The QAP encompasses all aspects of the analytical process. The management of Weck Laboratories, Inc. is committed to provide analytical and environmental services of the highest possible quality in order to satisfy the requirements of the regulatory agencies and to meet or exceed our clients' expectations.

This commitment is transmitted to all levels of our organization. Employees and associates are encouraged to constantly improve the quality of their work.

3.3 Fields of Testing

The analytical activities that will be described in this manual are divided into the following main groups:

- Environmental testing involving analysis of drinking water, wastewater, soil and hazardous waste. The analysis of environmental samples follows primarily the methodology approved by the California Department of Health Services under the Environmental Laboratory Accreditation Program and other regulatory agencies.

- Industrial Hygiene analysis of metals and organics in air filters and sorbent tubes following primarily NIOSH published methods.

- Analysis of air samples follows the methodology of the California Air Resources Board, the SCAQMD and other agencies.

3.4 Management of the QAP Manual

The Quality Assurance Program is constantly monitored, reviewed and evaluated. The Quality Assurance Officer is the primary person in charge of updating, revising and distributing this QAP Manual. The Laboratory Director and Technical Directors also have input in the upgrade of the Manual. The revision process takes place when needed if there is a change in some of the processes described, and it is also reviewed and re-approved yearly, if no changes are needed. After the revision is completed, the manual is approved for release by the QA Officer and by the Management. After it is submitted, some time is allowed for training of the personnel in the changes introduced if any. The Dates of submittal and the effective date are in the cover page of the document.

4 DESCRIPTION OF THE LABORATORY

4.1 Identification

Dr. Friedrich J. Weck founded Weck Laboratories, Inc. in 1964 as a consulting and contract laboratory dedicated to independent analytical testing and research activities. Over the years the Laboratory's primary activity shifted to environmental analytical chemistry.

The company is a California Corporation established in 1981. The address of the Laboratory facility is 14859 East Clark Avenue, City of Industry, California, 91745, located north of the 60 Freeway, Seventh Avenue exit.

4.2 Fields of Activity

Weck Laboratories offers a full range of environmental testing, including drinking water, wastewater, groundwater, soil, hazardous waste, ambient air and industrial hygiene testing. The types of analyses performed include organic, inorganic, physical and bacteriological tests, distributed between two buildings located at the facility.

4.3 Organizational Structure

The different positions within the laboratory have job descriptions that are maintained in the Human Resources department. The organization chart of Weck Laboratories, Inc. can be found in Appendix 3.

5 STAFF

5.1 Management Personnel

The managerial and technical personnel have the authority and resources needed to carry out their duties and to identify the occurrence of departures from the quality system or from the procedures for performing environmental tests and/or calibrations, and to initiate actions to prevent or minimize such departures. Technical management has overall responsibility for the technical operations and for the provision of the resources needed to ensure the required quality of laboratory operations.
Deputies are appointed for key managerial personnel, including the technical director(s) and QA Officer, to perform their duties in case of prolonged absences.
The following are the responsibilities and activities within the QAP in which the key and management personnel are engaged:

<u>Laboratory Management</u>

- Defining the minimal level of experience and skills necessary for all positions in the laboratory.
- Ensuring that all technical laboratory personnel have demonstrated capability in the activities for which they are responsible.
- Ensuring that the training of its personnel is kept up-to-date.
- Documenting all analytical and operational activities.
- Supervising all personnel
- Ensuring that all sample acceptance criteria are verified and that samples are logged into the sample tracking system and properly labeled and stored.
- Performing with the other management staff an annual Management System Review.
- Documenting the quality of all data reported by the laboratory

- Ensuring that the laboratory has the appropriate resources and facilities to perform requested work
- Ensuring that corrective actions relating to findings from the internal audit are completed; and
- Nominating deputies when the Technical Directors or QA Officer are absent.
- Developing a proactive program for prevention and detection of improper, unethical or illegal actions.
- Ensuring that only those outside support services and supplies that are of adequate quality to sustain confidence in the laboratory's tests are used.

QA Officer

The QA Officer is responsible for the Quality System of the laboratory and its implementation. He or she has direct access to the highest level of management (President/Laboratory Director) and to the Technical Directors to resolve any dispute involving data quality.

The specific functions and characteristics of the QA Officer are the following:

- Serve as the focal point for QA/QC and be responsible for the oversight and/or review of quality control data.
- Have functions independent from laboratory day-to-day operations for which he or she has quality assurance oversight.
- Be able to evaluate data objectively and perform assessments without any outside influence.
- Have documented training and/or experience in QA/QC procedures and be knowledgeable in the quality system as defined under NELAC.
- Have a general knowledge of the analytical tests methods for which data review is performed.
- Arrange for or conduct internal audits on the entire technical operation annually
- Notify laboratory management of deficiencies and non-compliance items in the quality system and monitor corrective action.
- The QA Officer has sufficient authority to stop work as deemed necessary in the event of serious QA/QC issues.

Technical Directors

The full time individuals who have overall responsibility for the technical operation of the laboratory. There are two technical directors: for Organic Analysis and for Inorganic and microbiological analysis.
The daily activities and responsibilities of the Technical Directors are the following:

- Certifying that personnel with appropriate educational and/or technical background perform all tests for which the laboratory is accredited
- Monitoring standards of performance in quality control and quality assurance.
- Monitoring the validity of the analyses performed and data generated in the laboratory to assure reliable data
- Ensuring that sufficient number of qualified personnel are employed to supervise and perform the work of the laboratory
- Providing educational direction to laboratory staff

- Exercising day-to-day supervision of laboratory operations for the corresponding department.

The Technical Directors of Weck Laboratories meet the requirements specified in Section 4.1.1.1 of the NELAC Standards.

Resumes of management personnel are in Appendix 1

5.2 Personnel Qualifications

The technical staff is responsible for sample analysis and identification of corrective actions. The staff reports directly to the Laboratory Director or Lab Manager. All personnel are responsible for complying with all quality assurance/quality control (QA/QC) requirements that pertain to their organizational/technical function. As documented in the employee records, each employee has the experience and education to adequately demonstrate knowledge for their particular function and the general knowledge of laboratory operations, analytical test methods, QA/QC procedures and records management.

The laboratory management shall ensure the competence of all who operate specific equipment, perform environmental tests, evaluate results, and sign test reports and calibration certificates. When using staff that are undergoing training, appropriate supervision shall be provided. Personnel performing specific tasks shall be qualified on the basis of appropriate education, training, experience and/or demonstrated skills, as required.

5.3 Personnel Training

Each employee is required to read, understand, and to use the current versions of the established Standard Operating Procedures and Analytical Method Protocols, which relates to his/her job responsibilities. The Training records show evidence of the revisions of the SOPs the employees have reviewed. Each employee demonstrates initial proficiency by following the procedure described in Appendix 9 of this manual, and demonstrates continued proficiency on a yearly basis by acceptable performance on Laboratory Control Samples (LCS), successful analysis of blind samples or by analyzing in parallel a sample analyzed by a trained or re-trained analyst. The training records of the analysts are organized by analyst and kept with personnel files. They include initial and continuing training, continuing education, participation in technical conferences or seminars and internal training activities.
Initial training for new employees is performed by experienced personnel with management guidance and includes the observation of the QC procedures described in this manual.
The company has a policy that encourages all technical personnel to participate in technical seminars and meetings involving innovative analytical technologies, new instrumentation and software applied to environmental testing. Records of this participation are maintained in the personnel files.

The management of the laboratory shall formulate the goals with respect to the education, training and skills of the laboratory personnel.
The personnel performing analytical and related tasks at the laboratory must be employed by, or under contract to, the laboratory. Where contracted and additional technical and key support personnel are used, the laboratory shall ensure that such personnel are supervised and competent and that they work in accordance with the laboratory's quality system.
The laboratory shall maintain current job descriptions for all personnel who manage, perform, or verify work affecting the quality of the environmental tests.

The management shall authorize specific personnel to perform particular types of sampling, environmental test, to issue test reports and calibration certificates, to give opinions and interpretations and to operate particular types of equipment. The laboratory shall maintain records of the relevant authorization(s), competence, educational and professional qualifications, training, skills and experience of all technical personnel, including contracted personnel. This information shall be readily available and shall include the date on which authorization and/or competence is confirmed.
Records on the relevant qualifications, training, skills and experience of the technical personnel shall be maintained by the laboratory, including records on demonstrated proficiency for each laboratory test method.

6 LABORATORY CAPABILITIES AND ACCREDITATIONS

Weck Laboratories, Inc. analyzes water, soil, hazardous waste and air samples. The following are the type of analysis performed:

- Drinking Water and Groundwater

  - Sampling: production wells and monitoring wells
  - Inorganic: trace metals, physical parameters, wet chemistry
  - Organic: volatile, semi-volatile, pesticides, herbicides
  - Bacteriological: Total and fecal coliforms, Heterotrophic Plate Count

- Waste Water

  - Sampling: composite samplers, grabs.
  - Inorganic: metals, physical parameters, wet chemistry
  - Organic: volatile, semi-volatile, pesticides, herbicides
  - Bacteriological: Total and fecal coliforms, Heterotrophic Plate Count

- Hazardous Waste and Soil

  - Characteristics: physical properties, leaching tests
  - Organic: volatile, semi-volatile, pesticides, herbicides
  - Inorganic: metals, wet chemistry

- Industrial Hygiene

  - Indoor Air Analysis: air filters (metals)
  - Sorbent tubes (organics)

The different analytical techniques and methods performed at the laboratory are described in the laboratory specific SOPs.

The Laboratory is accredited by various regulatory agencies to perform environmental testing. Current accreditations are listed in appendix 11.

The instrumental analytical capabilities of Weck Laboratories, Inc. include the following:

- **Sampling and field equipment**

  24 hours composite samplers for water.
  Flow measurement instruments
  Water quality kits
  Encore samplers for soil
  Immunoassay determinations

- **Inorganic analysis**:

  ICP-AES
  ICP-MS
  ICP-MS Flow Injection Analysis (hydride generation)
  Cold Vapor Atomic Absorption
  UV-visible spectrometry
  Ion Chromatography
  Ion Selective Electrodes

- **Organic Analysis**

  Purge and Trap equipment for direct purging of soils
  Purge and trap for water
  GC/MS for volatile organics
  GC/MS for semi volatile organics
  GC/MS/MS (tandem Mass spectrometry)
  GC/MS with Chemical Ionization positive ion and negative ion
  GC with FID,NPD,ECD,PID,TCD
  HPLC with post-column derivatization and UV-Visible and Fluorescence detectors.
  TOX
  TOC
  Infrared analysis

  A complete list of laboratory instrumentation is in Appendix 4.

7. QUALITY ASSURANCE OBJECTIVES

The overall QA objective of Weck Laboratories, Inc. is to develop and implement procedures for laboratory analysis, chain-of-custody, and reporting that will provide results, which are of known and documented quality. Data Quality Indicators (DQIs) are used as qualitative and quantitative descriptors in interpreting the degree of acceptability or utility of data. The principal DQIs are precision, bias (accuracy), representativeness, comparability, completeness and detection limits. The DQIs are used as quantitative goals for the quality of data generated in the analytical measurement process. This section summarizes how specific QA objectives are achieved. The specific application of these various activities are contained in the method SOPs.

7.1 Precision

Precision is a measure of the degree to which two or more measurements are in agreement.

Precision is assessed through the calculation of relative percent differences (RPD) and relative standard deviations (RSD) for replicate samples. For analyses that have detectable levels of analytes (for example inorganic analyses), laboratory precision is usually assessed through the analysis of a sample/sample duplicate pair and field duplicate pairs. For analyses that frequently show no detectable levels of analytes (e.g., organic analyses), the precision is usually determined through the analysis of matrix spike/matrix spike duplicates (MS/MSD) and field duplicate samples.

7.2 Accuracy

Accuracy (Bias) is the degree of agreement between an observed value and an accepted reference or true value.

Accuracy is assessed by the analysis of blanks and through the adherence to all sample handling, preservation and holding times. Laboratory accuracy is further assessed through the analysis of MS/MSD, external quality control check samples, laboratory control samples (LCS and LCSD) and surrogate compounds spikes.

7.3 Representativeness

Representativeness expresses the degree to which data accurately and precisely represent a characteristic of a population, parameter variations at a sampling point process condition, or an environmental condition within a defined spatial and/or temporal boundary.

Representativeness is ensured by using the proper sampling techniques, proper analytical procedures, appropriate methods; meeting sample holding times and analyzing field duplicate samples.

7.4 Completeness

Completeness is a measure of the amount of valid data obtained from a measurement system compared to the amount that was expected to be obtained under normal conditions.

Laboratory completeness is a measure of the amount of valid measurement obtained from all the measurement taken in the project. The laboratory completeness objective is that the generation of valid data for all samples be greater than 95 percent.

7.5 Comparability

Comparability is an expression of the confidence with which one data can be compared to another.

Comparability is achieved by the use of routine analytical methods, achieving holding times, reporting results in common units, use of consistent detection levels, and consistent rules for reporting data.

7.6 Detection Limits

Method Detection Limits (MDLs) are determined for all analytes as specified in the NELAC standards. From these, Reporting Limits (RLs) are obtained. See section 12.2 for more detailed information.

8. SAMPLING

Most samples processed at the laboratory are collected by clients or their representatives. When required, Weck Laboratories can provide technical assistance for sample collection and handling and can prepare appropriate sample containers with preservatives.
Weck Laboratories field personnel conduct sampling of wastewater and potable water for projects that require this. Our personnel do not perform industrial hygiene sampling.

In order to assure the quality of the entire analytical process, Weck Laboratories works closely with field personnel employed by the client to meet general QA criteria and if available specific criteria as per the QAPjP.

When performing sampling activities related to environmental testing, the laboratory sampling personnel follows the corresponding SOPs. Copies of the SOPs are kept at the field for reference.

The procedures to obtain subsamples, such as obtaining sample aliquots, are documented in each analytical SOP that requires it.

Where the client requires deviations, additions or exclusions from the documented sampling procedure, these are recorded in detail in the case narrative of the work order and reported with the analytical report. They are also communicated to the appropriate personnel.

In the instances that the laboratory does not perform the sampling and whenever possible all sampling information, such as name of sampler, company that employs the sampler, sampling procedure, etc. is recorded in the sampling section of each work order and reported to the client. All other pertinent sampling information and relevant data for operations relating to sampling that forms part of the environmental testing that is undertaken is also recorded and reported with the analytical report.

9. SAMPLE HANDLING

This section summarizes policies and practices for sample handling. Further details are contained in the corresponding SOPs.

9.1 Sample Tracking

Weck Laboratories, Inc. uniquely identifies each sample to be tested, to ensure that there can be no confusion regarding identity. The sample identification system includes identification for all samples, sub-samples and subsequent extracts and/or digestates. A unique identification (ID) code is placed on each sample container.

9.2 Review of Requests, Tenders and Contracts

When a request, tender or contract is received by the Laboratory, the Management or designated staff member will review and ensure that the requirements, including the methods to be used, are adequately defined, documented and understood and that the laboratory has the capability and resources to meet the requirements. The purpose of this review of capability is to establish that the laboratory possesses the necessary physical, personnel and information resources, and that the laboratory's personnel have the skills and expertise necessary for the performance of the tests in question. The review may encompass results of

earlier participation in interlaboratory comparisons or proficiency testing and/or the running of trial environmental test or calibration programs using samples or items of known value in order to determine uncertainties of measurement, detection limits of confidence limits, or other essential quality control requirements. The current accreditation status of the laboratory is also reviewed. The laboratory then informs the client of the results of this review if it indicates any potential conflict, deficiency, lack of appropriate accreditation status, or inability on the laboratory's part to complete the client's work. Another item to review is whether or not the appropriate test method is selected and capable of meeting the clients' requirements.
The management or designated staff will discuss and resolve any differences between the request or tender and the contract before any work commences in order to assure that each contract is acceptable both to the laboratory and the client.
A contract may be any written or oral agreement to provide a client with environmental testing or other laboratory services.
Records of reviews, including any significant changes, shall be maintained. Records shall also be maintained of pertinent discussions with a client relating to the client's requirements or the results of the work during the period of execution of the contract.
For review of routine and other simple tasks, the date and the identification (e. g. the initials) of the person in the laboratory responsible for carrying out the contracted work are considered adequate.
For repetitive routine tasks, the review need be made only at the initial enquiry stage or on granting of the contract for on-going routine work performed under a general agreement with the client, provided that the client's requirements remain unchanged. For new, complex or advanced environmental testing, a more comprehensive record should be maintained.
The review shall also cover any work that is subcontracted by the laboratory.
The client shall be informed of any deviation from the contract.
If a contract needs to be amended after work has commenced, the same contract review process shall be repeated and any amendments shall be communicated to all affected personnel.
If there is any suspension of accreditation, revocation of accreditation, or voluntary withdrawal of accreditation during the time the contract is in effect, this must be reported to the client.

9.3 Sample Acceptance Policy

The following are the requirements for sample acceptance. Data from any samples, which do not meet the policy here specified, are noted in the laboratory report defining the nature and substance of the variation:

- Proper, full, and complete documentation, including the sample identification, the location, date and time of collection, collector's name, preservation type, sample type and any special remarks concerning the sample. This information must be fully documented in the chain of custody record. Appendix 5
- Unique identification of samples using durable labels completed in indelible ink on all sample containers.
- Use of appropriate sample containers and preservatives as per table in Appendix 6.
- All samples have adequate holding time to be analyzed (Appendix 6).
- If no previous special arrangements were made, parameters that are "field" analysis (i.e. pH, residual chlorine, etc.) will be analyzed within 24 hours from arrival at the laboratory. Samples that arrive at the laboratory after 4 PM on Friday or on the weekend will be analyzed no later than the next business day after receipt (Monday unless a holiday).
- Adequate sample size for all analysis requested.

- Special instructions and additional information required to perform the analysis properly (i.e., time, flow rate, etc.).
- Procedures that are used when samples show signs of damage or contamination.
- Samples received at the required temperature (usually 4°C ± 2 °C) or with evidence of chilling process started (received "on ice") if they were collected the same day as received at the lab.

If any of the above requirements are not met, the client is notified immediately, and the irregularity is documented:

- If the client acknowledges the irregularity and instructs the laboratory to continue with analysis this is documented and samples accepted.
- If the client does not acknowledge the irregularity the samples are rejected.
- If the irregularity is noted in samples submitted for bacteriological analysis for compliance purposes, the samples are rejected without exception.

When a request for a new project is received involving multiple samples or tests that have a short holding time the Management is notified. The Management staff with the assistance of the appropriate technical personnel evaluates the project and calculates the resources needed to complete it within the turn around time required and the holding times, taking into consideration the volume of work in house and/or expected. If it is determined that the new project will not affect the proper completion of jobs already in house and that the laboratory has the resources (personnel, equipment and facilities) necessary to accommodate the new project, this is accepted.
If the Management or any of the technical staff involved thinks that the new job will create problems in terms of reduced quality of work, completion out of specified or required time, or any other detrimental situation, the new project is not accepted and the client notified.
If there are alternatives, such as postponement, modification of sampling schedules or partial subcontracting to another lab in order to accommodate the project, this is proposed to the client.

9.4 Sample Receipt Protocol

Upon receipt, the condition of the sample, including any abnormalities or departures from standard condition is recorded. All samples, which require thermal preservation, are considered acceptable if the arrival temperature is either within +/- 2 °C of the required temperature or the method specific range. Samples that are hand delivered to the laboratory immediately after collection may not meet these criteria. In these cases, the samples will be considered acceptable if there is evidence that the chilling process has begun, such as arrival on ice. The temperature at which the samples are received is measured and recorded in the documents and in the LIMS.

Where applicable, Weck Laboratories, Inc. verifies chemical preservation using readily available techniques, such as pH or free chlorine, prior to or during sample preparation or analysis. The results of all checks are recorded.
When there is any doubt as to the sample's suitability for testing or if the sample does not meet any of the above criteria or if irregularities are noted, the client is notified immediately, and the irregularity is documented. If the client acknowledges the irregularity and instructs the laboratory to continue with analysis this is also documented. If the client does not acknowledge the irregularity the samples are rejected. If the irregularity is noted in samples submitted for bacteriological analysis for compliance purposes, the samples are rejected without exception.

The sample identification number is affixed to all sample containers and worksheets are prepared for the different types of analyses requested. When there are different containers or sub-samples belonging to one sample for multiple tests, the fraction name is indicated on the sample bottle by a suffix letter or other means. Alternatively, pre-labeled bottles containing the required tests are also provided.

9.5 Storage conditions

Samples that require thermal preservation are stored under refrigeration, which is +/- 2 °C of the specified preservation temperature. When this temperature is 4 °C, a storage temperature of just above the freezing temperature to 6 °C is considered acceptable. Samples are stored in a manner that prevents cross contamination, normally they are separated based on matrix, analysis and level of known contamination. Other samples are kept in specific areas while they are being tested. Evidence samples are stored in secured and controlled access areas.

9.6 Custody of Samples and Documentation

The Chain-of-Custody procedures begin when the sample is collected. At that time, a COC form is prepared, containing all the information about the sample (project name, sample identification, date and time of collection, name of person performing the sampling, matrix type, tests requested, number of containers, field measurements, and all other pertinent information).

The person who does the sampling must sign the COC record. The relinquishing and receiving parties must also sign the COC, indicating the date and time this operation was performed.
If the client submits the sample to the laboratory, a copy of the COC form is given to the client as evidence of receipt, while the other two copies are kept at the laboratory.

For samples received in sealed ice chests by commercial freight companies (UPS, FedEx), copies of shipping papers are attached to the COC form for future reference. The person receiving the sample also makes a notation of the type of shipment on the COC.

Access to all samples and sub-samples is controlled. The laboratory area is maintained secured and is restricted to authorized personnel only.

When full Legal/Evidentiary Chain of Custody protocols are required, COC records are used to establish an intact, continuous record of the physical possession, storage and disposal of sample containers, collected samples, sample aliquots, and sample extracts or digestates, The COC records account for all time periods associated with the samples. The COC records identify all individuals who physically handled individual samples. The COC forms remain with the samples during transport or shipment. If shipping containers and/or individual sample containers are submitted with sample custody seals, and any seals are not intact, the lab shall note this on the chain of custody. Other documents pertaining to the transport of the samples, such as receipts from common carriers are kept as part of the documentation.
When evidentiary samples, subsamples, digestates or extracts are transferred to another party they are subject to the requirements of legal chain of custody. These samples are kept in a locked area or refrigerator with the key in possession of the designated sample custodian.

9.7 Sample disposal

Samples are retained for thirty days from report date unless otherwise instructed by the client or if the samples are part of litigation or have been received under legal/evidentiary requirements, in which case the disposal of the physical sample is accomplished with the concurrence of the affected legal authority. After the retention period samples are either returned to the client or properly disposed of according to federal and state laws and regulations.

10. CALIBRATION PROCEDURES AND FREQUENCY

10.1 Measurement Traceability

10.1.1 General

Whenever applicable, calibration of analytical support equipment and instruments and the overall program of calibration and/or verification is designed and operated so as to ensure that measurements are traceable to national standards of measurement.

All equipment used for environmental tests and/or calibrations, including equipment for subsidiary measurements (e. g. for environmental conditions) having a significant effect on the accuracy or validity of the result of the environmental test or sampling shall be calibrated before being put into service and on a continuing basis. The calibration of such equipment is performed according to the established program and procedure. This includes balances, thermometers, and control standards. The program also includes a system for selecting, using, calibrating, checking, controlling and maintaining measurement standards, reference materials used as measurement standards, and measuring and test equipment used to perform environmental tests.

10.1.2 Specific Requirements

The calibration of equipment shall be designed and operated so as to ensure that calibrations and measurements made by the laboratory are traceable to the International System of Units (SI).
The traceability is established for measuring instruments to the SI by means of an unbroken chain of calibrations or comparisons linking them to relevant primary standards of the SI units of measurement. The link to SI units may be achieved by reference to national measurement standards. National measurement standards may be primary standards, which are primary realizations of the SI units or agreed representations of SI units based on fundamental physical constants, or they may be secondary standards which are standards calibrated by another national metrology institute. When using external calibration services, traceability of measurement shall be assured by the use of calibration services from laboratories that can demonstrate competence, measurement capability and traceability.
There are certain calibrations that currently cannot be strictly made in SI units. In these cases calibration shall provide confidence in measurements by establishing traceability to appropriate measurement standards such as the use of certified reference materials provided by a competent supplier to give a reliable physical or chemical characterization of a material and the use of specified methods and/or consensus standards that are clearly described and agreed by all parties concerned.
Participation in a suitable program of interlaboratory comparisons is required where possible.

The requirements above specified do not apply when it has been established that the associated contribution from the calibration contributes little to the total uncertainty of the test result. When this situation arises, the laboratory shall ensure that the equipment used can provide the uncertainty of measurement needed.

Where traceability of measurements to SI units is not possible and/or not relevant, the same requirements for traceability to, for example, certified reference materials, agreed methods and/or consensus standards, are required.

- The overall program of calibration and/or verification and validation of equipment shall be designed and operated so as to ensure that measurements made by the laboratory are traceable to national standards of measurement.
- Calibration certificates shall indicate the traceability to national standards of measurement and shall provide the measurement results and associated uncertainty of measurement and/or a statement of compliance with an identified metrological specification. The laboratory shall maintain records of all such certifications.
- Where traceability to national standards of measurement is not applicable, the laboratory shall provide satisfactory evidence of correlation of results, for example by participation in a suitable program of interlaboratory comparisons, proficiency testing, or independent analysis.

Calibration certificates obtained by the laboratory shall indicate the traceability to national standards of measurement and shall provide the measurement results and associated uncertainty of measurement and/or a statement of compliance with an identified metrological specification. The laboratory shall maintain records of all such certifications.

Where traceability to national standards of measurement is not applicable, the laboratory shall provide satisfactory evidence of correlation of results, for example by participation in a suitable program of interlaboratory comparisons, proficiency testing, or independent analysis, if any is available.

10.2 Reference Standards

Reference standards of measurement (such as Class S or equivalent weights or traceable thermometers) are used for calibration only. Reference standards are subjected to in-service checks between calibrations and verifications.
Reference materials that require re-certification are submitted promptly to a qualified certification body.

10.3 General Requirements

Each calibration is dated and labeled with or traceable to the method, instrument, analysis date, and each analyte name, concentration and response (or response factor). Sufficient information is recorded to permit reconstruction of the calibration. Acceptance criteria for calibrations comply with method requirements or are established and documented.

10.4 Analytical Support Equipment

Analytical support equipment includes: balances, ovens, refrigerators, freezers, incubators, water baths, temperature measuring devices and volumetric dispensing devices if quantitative results are dependent on their accuracy, as in standard preparation and dispensing or dilution into a specified volume. All such support equipment is:

- Maintained in proper working order. The records of all activities including service calls are kept.
- Calibrated or verified annually using NIST traceable references when available, over the entire range of use. The results of such calibration must be within the specifications required in the application for which the equipment is used, if not, the equipment is either removed from service until repaired or a correction factor is applied to it, if applicable.

Prior to use on each working day, balances, ovens, refrigerators, freezers, incubators and water baths are verified for the expected use range using NIST traceable references (where possible). The acceptability for use or continued use is according to the needs of the analysis or application for which the equipment is being used.
Mechanical volumetric dispensing devices (except Class A glassware and microsyringes) are checked for accuracy quarterly.

10.4.1 Balances and reference weights

Laboratory balances and Class S reference weights are serviced and calibrated once a year by a third party specialist, Watson Bros. Weck Laboratories has a contract with Watson Bros., by which they automatically come for balance and weights inspection and calibration every year. The calibration or service is performed more frequently if a problem is suspected or observed by visual inspection.

10.4.2 Thermometers

All thermometers are checked annually against a NIST traceable reference thermometer, which is submitted for certification on annual basis.

10.4.3 Monitoring of Temperature

All refrigerators and freezers used for storage of samples and standards or reagents are monitored for temperature daily. The incubators used for bacteriological analysis are monitored twice a day for temperatures and the incubator for BOD is monitored daily. The temperatures are entered in charts posted on each unit that also include the initials of the person performing the checks and the acceptance ranges. When a temperature is out of compliance in any refrigerator, freezer or incubator, immediate action is taken to correct the problem.
Some support instruments such as ovens and water bath for fecal coliforms are not in use every day, so temperature is checked only for the days they are actually in operation.

10.5 Initial Instrument Calibration and Continuing Calibration Verification

All instruments are calibrated in accordance with the respective SOPs and/or method of analysis. The typical calibration procedure consists of an initial calibration, performed by running a series of standards and calculating the response by using either the response factors or by linear or polynomial regression analysis. This is followed by a calibration verification when an initial instrument calibration is not performed on the day of analysis. All calibration procedures are thoroughly documented. The frequency, acceptance criteria and the conditions that will require recalibration are described in the corresponding SOPs. In all cases, the initial calibration is verified using an independently prepared calibration verification solution. For all chemical determinations in which standards are involved for calibration, it is the policy of the company to use a secondary reference material obtained from a different source, such as another supplier (preferred) or a different lot number, or prepared in house. This secondary reference can be an LCS or other standard run to verify the integrity of the primary standard.

Specific analyses' calibrations are checked more frequently. Some instruments, such as TOX analyzers have built-in calibration features. The internal calibration of these instruments is monitored daily for accuracy.

All results are calculated based on the response curve from the initial calibration and generally not quantitated from any continuing instrument calibration verification unless otherwise required by regulation, method, or program. The results are bracketed by calibration standards being the lowest calibration standard the lowest concentration for which quantitative data are to be reported. Any data reported below the lower limit of quantitation is considered to have an increased quantitative uncertainty and consequently it is reported using defined qualifiers or flags or explained in the case narrative; and the highest calibration standard is the highest concentration for which quantitative data are to be reported. Any data reported above this highest standard is considered to have an increased quantitative uncertainty and it is reported as an estimated value using the defined data qualifiers or explained in the case narrative, unless the sample can be diluted and re-run within the limits of the initial calibration curve.

The following is the criteria used for the acceptance of an initial calibration, unless specified differently in the analytical methods:

- Use the average response factor (RF) if the percent relative standard deviation (%RSD) of the points is less than 20%. In this case, linearity through the origin is assumed.
- If the %RSD is greater than 20%, linearity through the origin cannot be assumed and a linear regression, a weighed linear regression or a non-linear regression can be used. The acceptance criteria for linear regression are a coefficient of correlation (r) equal or greater than 0.99 and for non-linear regression the coefficient of determination (COD) must be equal or greater than 0.98. In both cases, the curve is not to be forced through the origin nor the origin is used as another point. The sample results must be within the first and last standards.
- The number of data points to construct the initial calibration curve shall be obtained from the analytical method employed. If no criteria are specified, the laboratory shall construct initial calibration curves using a minimum of two data points without counting the blank and zero standard.
- The lowest standard shall be at or near the reporting limit for the method and at or below the regulatory limit/decision level if known by the laboratory.
- The lowest calibration standard must be above the detection limit. Noted exception: The following shall occur for instrument technology (such as ICP or ICP/MS) with validated techniques from manufacturers or methods employing standardization with a zero point and a single point calibration standard:
    - Prior to the analysis of samples the zero point and single point calibration must be analyzed and the linear range of the instrument must be established by analyzing a series of standards, one of which must be at the lowest quantitation level.
    - Zero point and single point calibration standard must be analyzed with each analytical batch.
    - A standard corresponding to the lowest quantitation level must be analyzed with each analytical batch and must meet established acceptance criteria.
    - The linearity is verified at a frequency established by the method and/or the manufacturer.
    - If a sample within an analytical batch produces results above its associated single point standard then one of the following should occur:
        - analyze reference material at or above the sample value that meets established acceptance criteria for validating the linearity;
        - dilute the sample such that the result falls below the single point calibration concentration;
        - Report the data with an appropriate data qualifier and/or explain in the case narrative.

If the initial calibration fails, the analysis procedure is stopped and evaluated. For example, a second standard may be analyzed and evaluated or a new initial calibration curve may be established and verified. In all cases, the initial calibration must be acceptable before analyzing samples. If samples can not be reanalyzed, data associated with an unacceptable initial instrument calibration must be reported with appropriate data qualifiers.

When an initial calibration is not performed on the day of the analysis, a calibration verification check standard is analyzed at the beginning and at the end of each batch. An exception to this policy is for internal standard methods (e.g. most organic methods). For these analyses, the calibration check is only analyzed at the beginning of the analytical sequence or analytical batch. The concentration of this calibration check is specified in each method SOP and whenever possible is varied within the established calibration range.

Sufficient raw data records are retained electronically and in form of printouts to permit reconstruction of the continuing instrument calibration verification, e.g., test method, instrument, analysis date, each analyte name, concentration and response, calibration curve or response factor, or unique equations or coefficients used to convert instrument responses into concentrations. Continuing calibration verification records explicitly connect the continuing verification data to the initial instrument calibration by listing in the quantification report the initial calibration file that was used for the calculation.

If a calibration check standard fails, and routine corrective action procedures fail to produce a second consecutive calibration check within acceptance criteria, a new initial calibration curve is constructed. If the continuing calibration acceptance criteria are exceeded high (i.e. high bias), and there are non-detects for the corresponding analyte in all environmental samples associated with the continuing calibration check, then those non-detects may be reported as qualified data, otherwise the samples affected by the unacceptable check are reanalyzed after a new calibration has been established, evaluated and accepted. If the continuing calibration acceptance criteria are below the low limit, results may be reported as qualified data if sample results indicate a concentration above an action level and accurate values are not required by the customer. Otherwise, additional sample analysis does not occur until a new calibration curve is established and verified.

When intermediate checks are needed to maintain confidence in the calibration status of the equipment, these checks shall be carried out according to each Standard Operating Procedure for the analytical method.

Where calibrations give rise to a set of correction factors, the laboratory shall have procedures to ensure that copies (e. g. in computer software) are correctly updated.

If the continuing instrument calibration verification results obtained are outside established acceptance criteria, corrective actions are performed. If routine corrective action procedures fail to produce a second consecutive (immediate) calibration verification within acceptance criteria, the following options are available:

- Demonstrate performance after corrective action with two consecutive successful calibration verifications
- Perform a new initial instrument calibration.

If acceptable performance has not been demonstrated, sample analyses shall not occur until a new initial calibration curve is established and verified. However, sample data associated with an unacceptable calibration verification may be reported as qualified data under the following special conditions:

- When the acceptance criteria for the continuing calibration verification are exceeded high, i.e., high bias, and there are associated samples that are non-detects, then those non-detects may be reported. Otherwise the samples affected by the unacceptable calibration verification shall be reanalyzed after a new calibration curve has been established, evaluated and accepted.
- When the acceptance criteria for the continuing calibration verification are exceeded low, i.e., low bias, those sample results may be reported if they exceed a maximum regulatory limit/decision level or if the samples are not for regulatory compliance and accurate values are not required by the customer. Otherwise the samples affected by the unacceptable verification shall be reanalyzed after a new calibration curve has been established, evaluated and accepted.

11. TEST METHODS AND STANDARD OPERATING PROCEDURES

The methods and procedures used at the laboratory are the appropriate ones for all environmental tests within its scope. These include sampling, handling, transport, storage and preparation of samples, and, where appropriate, an estimation of the measurement uncertainty as well as statistical techniques for analysis of environmental test and/or calibration data.

The methods used at the laboratory, including methods for sampling, must meet the needs of the client and are appropriate for the environmental tests it undertakes. These analytical procedures currently in use are based on the methodology approved by the EPA, the California Department of Health Services, the AIHA, and other regulatory agencies.

In some cases, Weck Laboratories can perform analyses that are not specifically described in the guidelines cited above. In these cases, the following approach is taken:

- Review other sources of test methods such as AOAC, ASTM, Pesticide Manual, etc., to find a suitable method for the matrix and analyte in question.
- Produce a modification of a standard test procedure for similar parameter or matrix
- Develop a special method in house suitable for the particular problem

For these special situations the analytical procedure is discussed with the client and performed upon the client's approval. Whenever possible, the same QA/QC guidelines as for standard methods are used, but the laboratory may deviate from these guidelines if necessary.

The Laboratory maintains Standard Operating Procedures (SOPs) that accurately reflect all phases of current laboratory activities such as assessing data integrity, corrective actions, handling customer complaints, and all test methods.
The SOPs provide all information needed to perform the different analytical tasks in accordance with regulatory requirements and in a consistent and controlled manner following the guidelines described in this QAP manual. They are subject to continuous review and update. Copies of all SOPs are accessible to all personnel. Each SOP has an alphanumeric code that indicates the section it belongs, the number that identifies it, the revision number, the effective date and the signature of the QA Officer, Technical Director or Laboratory Director.

If other documents besides laboratory generated SOPs (i.e. equipment manuals, copies of published methods, etc.) are used as Standard Operating Procedures, they must be written in a way that they can be

used as written and any changes, including the use of a selected option must be documented and included in the laboratory's SOP manual.

A current list of the Standard Operating Procedures in use is in Appendix 7.

11.1 Test Methods

11.1.1 Source of Methods

The sources of Methods used at the laboratory are the following:

- Methods published in international, regional or national standards are preferably used, ensuring that the latest valid edition of a standard is used unless it is not appropriate or possible to do so. When necessary, the standard shall be supplemented with additional details to ensure consistent application.
- When the use of specific methods for a sample analysis are mandated or requested, only those methods shall be used.
- When the client does not specify the method to be used or where methods are employed that are not required, as in the Performance Based Measurement System approach, the methods shall be fully documented and validated, and be available to the client and other recipients of the relevant reports. The laboratory shall select appropriate methods that have been published either in international, regional or national standards, or by reputable technical organizations, or in relevant scientific texts or journals, or as specified by the manufacturer of the equipment. In some cases Laboratory-developed methods or methods adopted by the laboratory might be used if they are appropriate for the intended use and if they are validated. The client shall be informed as to the method chosen.
- The client is informed when the method proposed by the client is considered to be inappropriate or out of date.

The Laboratory in some instances will develop methods for its own use; in this case this is considered a planned activity and will be assigned to qualified personnel equipped with adequate resources. Plans shall be updated as development proceeds and effective communication amongst all personnel involved shall be ensured.

When it is necessary to use methods not covered by standard methods, these shall be subject to agreement with the client and shall include a clear specification of the client's requirements and the purpose of the environmental test and/or calibration. The method developed shall have been validated appropriately before use.

Most methods in use at the laboratory are described in the following publications:

- Tests Methods for Evaluating Solid Waste, Physical/Chemical Methods, SW-846, current edition,
- Methods for Chemical Analysis of Water and Wastewater, EPA-600/4-79-020.
- Standard Methods for the Examination of Water and Wastewater, current approved edition, APHA, AWWA, WPCF.
- Criteria for Identification of Hazardous and Extremely Hazardous Wastes, California Code of Regulations Title 22.
- Methods for Organic Chemical Analysis of Municipal and Industrial Wastewater EPA-600/4-82-057.
- Recommended Methods of Analysis for the Organic components required for AB1803, 5th Edition Revised April 1986.

- Draft Method for Total Petroleum Hydrocarbons and Total Organic Lead, LUFT Methods, California Department of Health Services.
- Methods for the Determination of Organic Compounds in Finished Drinking Water and Raw Source Water - EPA 500 series.
- NIOSH Manual of Analytical Methods, US Department of Health and Human Services.
- Laboratory Methods of Analysis for Enforcement samples, SCAQMD, 1986.
- Stationary Source Test Methods, Air Resources Board, 1990.
- OSHA Analytical Methods Manual, 2nd Ed., U.S. Dept. of Labor, 1990.

Reference methods for all analytical procedures are kept in the Laboratory Office. Copies of specific methods are also in the corresponding sectors where the analyses are performed.

11.1.2 Validation of Methods

Validation is the confirmation by examination and the provision of objective evidence that the particular requirements for a specific intended use are fulfilled.

The laboratory shall validate non-standard methods, laboratory-designed/developed methods, standard methods used outside their intended scope, and amplifications and modifications of standard methods to confirm that the methods are fit for the intended use. The validation shall be as extensive as is necessary to meet the needs of the given application or field of application. The laboratory shall record the results obtained, the procedure used for the validation, and a statement as to whether the method is fit for the intended use.
The range and accuracy of the values obtainable from validated methods (e. g. the uncertainty of the results, detection limit, selectivity of the method, linearity, limit of repeatability and/or reproducibility, robustness against external influences and/or cross-sensitivity against interference from the matrix of the sample/test object), as assessed for the intended use, shall be relevant to the clients' needs.

The minimum requirements for method validation are the ones specified in Appendix C.3 of NELAC chapter 5.

11.2 SOPs for Sample Management

These SOPs describe the receipt, handling, scheduling, and storage of samples

Sample receipt and handling – These procedures describe the precautions to be used in opening sample shipment containers and how to verify that chain of custody has been maintained, examine samples for damage, check for proper preservatives and temperatures, and log samples into the laboratory sample streams.

Sample scheduling – These procedures describe the sample scheduling in the laboratory and includes procedures used to ensure that holding time requirements are met.

Sample storage – These procedures describe the storage conditions for all samples, verification and documentation of daily storage condition, and how to ensure that custody of the samples is maintained while in the laboratory.

11.3 SOPs for Reagent/Standard Preparation

These SOPs describe how to prepare standards and reagents. Information concerning specific grades of materials used in reagent and standard preparation, appropriate glassware and containers for preparation and storage, and labeling and record keeping for stocks and dilutions is included.

11.4 SOPs for General Laboratory Techniques

These SOPs describe all essentials of laboratory operations that are not addressed elsewhere. These techniques include glassware cleaning procedures, operation of analytical balances, pipetting techniques, and use of volumetric glassware, among others.

Procedures for test methods describing how the analyses are actually performed in the laboratory are specified in method SOPs. These SOPs for sample preparation, cleanup and analysis are based on publications listed in Section 11.1 above or on internally developed methods validated according to EPA's Performance-Based Measurement System.

The elements included or referenced in the SOPs, when applicable are the following:

11.4.1 Identification of the test method
11.4.2 Applicable matrix or matrices
11.4.3 Method detection limit
11.4.4 Scope and application, including components to be analyzed
11.4.5 Summary of the method
11.4.6 Definitions
11.4.7 Interferences
11.4.8 Safety
11.4.9 Equipment and supplies
11.4.10 Reagents and standards
11.4.11 Sample collection, preservation and handling
11.4.12 Quality control
11.4.13 Calibration and Standardization
11.4.14 Procedure
11.4.15 Calculations
11.4.16 Method Performance
11.4.17 Pollution prevention
11.4.18 Data assessment and acceptance criteria for quality control measures
11.4.19 Corrective actions for out-of-control data
11.4.20 Contingencies for handling out-of-control or unacceptable data
11.4.21 Waste management
11.4.22 References
11.4.23 Tables, Diagrams, flowcharts and data verification checklists.

11.5 SOPs for Equipment Calibration and Maintenance

These SOPs describe how to ensure that laboratory equipment and instrumentation are in working order. These procedures include calibration procedures and schedules, maintenance procedures and schedules, maintenance logs, services agreements for all equipment, and spare parts available in-house. Calibration and maintenance of laboratory equipment and instrumentation are in accordance with manufacturers' specifications or applicable test specifications.

12. QUALITY CONTROL DETERMINATIONS

12.1 Essential QC determinations

The data acquired from QC determinations are used to estimate the quality of analytical data, to determine the need for corrective action in response to deficiencies, and to interpret results after corrective action procedures are implemented. Each method SOP includes a QC section, which addresses the minimum QC requirements for the procedure. The internal QC checks may differ slightly for each individual procedure but in general are described below. The acceptance limits and corrective actions for these QC checks are described in Section 15 and 16 of this manual.

12.1.1 Blanks – Negative Controls

Method Blanks or LRBs are performed at a frequency of one per preparation batch of samples per matrix type. The result of this analysis is one of the QC measures to be used to assess batch acceptance.

The method blank is used to assess the preparation batch for possible contamination during the preparation and processing steps. The method blank is processed along with and under the same conditions as the associated samples to include all steps of the analytical procedure.

The method blank is analyzed at a minimum of 1 per preparation batch or one every 20 environmental samples, whichever is more frequent. The method blank shall consist of a matrix that is similar to the associated samples and is known to be free of the analytes of interest.

Blanks and negative controls are used in microbiological analysis on regular basis. They consist of blanks, sterility checks and known negative cultures. The detailed description is contained in the corresponding SOP.

Blanks are prepared and analyzed in the following situations, or whenever there is a need to obtain further information:

- A blank is extracted for every batch and type of matrix for analysis of semi-volatile organics by GC, GC/MS or HPLC.
- A blank is carried through all the digestion procedures for analysis of metals by AA, ICP or ICP-MS for every batch of samples and type of matrix for each instrument used.
- A blank is carried through the leaching procedures (TCLP, EP TOX, and WET) using the same extraction fluid, bottles and agitators as the samples.
- System/Reagent blanks are analyzed at the beginning of the day prior to calibration, after a high level standard, after changing matrix and after samples that are known or suspected to be very concentrated.
- Reagent blanks are analyzed for all wet chemistry determinations involving titrations or colorimetry and their value are subtracted from the reading of the samples, if appropriate.
- Blanks for mobility procedures (TCLP, ZHE, EP TOX, and WET) are analyzed by the appropriate method.
- Additional field and trip blanks are prepared and analyzed where required or whenever requested by the client

Sometimes the blanks may show detectable limits of target analytes. In these cases the source of the contamination must be investigated and measures taken to correct, minimize or eliminate the problem if:

- The blank contamination is at or above the reporting limit and exceeds a concentration greater than 1/10 of the measured concentration of any sample in the associated sample batch or
- The blank contamination exceeds the concentration present in the samples and is greater than 1/10 of the specified regulatory limit.
- The blank contamination otherwise affects the sample results as per the test method requirements or the individual project data quality objectives.

Any sample associated with the contaminated blank shall be reprocessed for analysis or the results reported with appropriate data qualifying codes.

12.1.2 Reproducibility and Recovery Determinations – Positive Controls

For the determination of accuracy and precision of the analytical methods, the techniques of fortified blanks, matrix spike/ matrix spike duplicate, sample duplicates and surrogate spiking are used on a regular basis. The frequency is dictated by each analytical method or Standard Operating Procedure (minimum 1 per batch of 20 samples). The results obtained are compared with current acceptance limits (Appendix 8) and recorded in the LIMS. For methods that do not specify the acceptance criterion, this is statistically obtained from data generated at the lab.
For microbiological determination of total and fecal coliforms positive checks are included with each batch analyzed. A more detailed description is included in the corresponding SOP.

12.1.2.1 Duplicates

Matrix duplicates are defined as replicate aliquots of the same sample taken through the entire analytical procedure. The results from this analysis indicate the precision of the results for the specific sample using the selected method. The matrix duplicate provides a usable measure of precision only when target analytes are found in the sample chosen for duplication and it is performed on replicate aliquots of actual samples, usually of unknown composition.
The frequency of the analysis of matrix duplicates may be determined as part of a systematic planning process (e.g. Data Quality Objectives) or as specified by the mandated test method. Duplicate analysis is also performed when unusual or suspicious results are obtained or when a higher degree of confidence in the analytical result is desired.
The routine analysis of field duplicates is often impractical (many analytes are frequently not detected) or not possible (not enough sample provided), so the evaluation of precision for most methods is accomplished by comparing the results obtained for matrix spike and matrix spike duplicate determinations (Section 12.1.2.3), rather than analysis of field duplicate samples. This is preferred since in many cases samples with frequent "not detected" results yield no useful information for statistical determinations of precision.

The results from matrix duplicates are primarily designed to assess the precision of analytical results in a given matrix and are expressed as relative percent difference (RPD) or another statistical treatment (e.g., absolute differences). The calculation of the RPD is detailed in Section 12.1.2.5.
Results are compared to the acceptance criteria as published in the mandated test method. Where there are no established criteria, internal criteria developed at the laboratory is used, which consists on using a minimum of 20 data points and calculating the maximum acceptable RPD based on 3 standard deviations of the historical values. For matrix duplicates results outside established criteria corrective action shall be documented or the data reported with appropriate data qualifying codes.

12.1.2.2 Laboratory Control Sample (LCS)

Laboratory Control Samples are also known as LFBs or Blank Spikes and are defined as a quality system matrix, free from the analytes of interest, spiked with verified known amounts of analytes from a source independent of the calibration standards or a material containing known and verified amounts of analytes. The LCS is used to evaluate the performance of the total analytical system, including all preparation and analysis steps. Results of the LCS are compared to established criteria and, if found to be outside of these criteria, indicates that the analytical system is "out of control". Any affected samples associated with an out of control LCS shall be reprocessed for re-analysis or the results reported with appropriate data qualifying codes.

At least one LCS is analyzed per preparation batch. Exceptions would be for those analytes for which no spiking solutions are available such as total suspended solids, total dissolved solids, total volatile solids, total solids, pH, color, odor, temperature, dissolved oxygen or turbidity. In those instances for which no separate preparation method is used (example: volatiles in water) the batch shall be defined as environmental samples that are analyzed together with the same method and personnel, using the same lots of reagents, not to exceed the analysis of 20 environmental samples.

The LCS is a quality system matrix, known to be free of analytes of interest, spiked with known and verified concentrations of analytes. The matrix spike (Sect. 12.1.2.3) may be used in place of this control as long as the acceptance criteria are as stringent as for the LCS. Alternatively the LCS may consist of a media containing known and verified concentrations of analytes or as Certified Reference Material (CRM). All analyte concentrations shall be within the calibration range of the methods.

The components to be spiked shall be as specified by the mandated test method or other regulatory requirement or as requested by the client. In the absence of specified spiking components the laboratory shall spike per the following:

- For those components that interfere with an accurate assessment such as spiking simultaneously with technical chlordane, toxaphene and PCBs, the spike should be chosen that represents the chemistries and elution patterns of the components to be reported.
- For those test methods that have extremely long lists of analytes, a representative number may be chosen. The analytes selected should be representative of all analytes reported. The following criteria shall be used for determining the minimum number of analytes to be spiked. However, the laboratory shall insure that all targeted components are included in the spike mixture over a 2-year period.
    a) For methods that include 1-10 targets, spike all components.
    b) For methods that include 11-20 targets, spike at least 10 compounds or 80% of the total, whichever is greater.
    c) For methods with more than 20 targets, spike at least 16 components.

The results of the individual batch LCS are calculated in percent recovery as specified in Sect.12.1.2.5. The individual LCS is compared to the acceptance criteria as published in the mandated test method. Where there are no established criteria, internal criteria are generated based on recoveries of past LCSs. To determine these criteria, at least 20 data points are used and the upper and lower acceptance limits are calculated as the "Mean + 3 SD" and "Mean – 3 SD" respectively, where SD is the standard deviation.

A LCS that is determined to be within the criteria effectively establishes that the analytical system is in control and validates system performance for the samples in the associated batch. Samples analyzed along with a LCS determined to be "out of control" should be considered suspect and the samples reprocessed and re-analyzed or the data reported with appropriate data qualifying codes.

If a large number of analytes are in the LCS, it becomes statistically likely that a few will be outside control limits. This may not indicate that the system is out of control, therefore corrective action may not be necessary. Upper and lower marginal exceedance (ME) limits can be established to determine when corrective action is necessary. A ME is defined as being beyond the LCS control limit (3 standard

deviations), but within the ME limits. ME limits are between 3 and 4 standard deviations around the mean. The number of allowable marginal exceedances is based on the number of analytes in the LCS. If more analytes exceed the LCS control limits than is allowed, or if any one analyte exceeds the ME limits, the LCS fails and corrective action is necessary. This marginal exceedance approach is relevant for methods with long lists of analytes. It will not apply to target analyte lists with fewer than 11 analytes.

The number of allowable marginal exceedances is as follows:

1) >90 analytes in LCS, 5 analytes allowed in ME of the LCS control limit;
2) 71-90 analytes in LCS, 4 analytes allowed in ME of the LCS control limit;
3) 51-70 analytes in LCS, 3 analytes allowed in ME of the LCS control limit;
4) 31-50 analytes in LCS, 2 analytes allowed in ME of the LCS control limit;
5) 11-30 analytes in LCS, 1 analytes allowed in ME of the LCS control limit;
6) <11 analytes in LCS, no analytes allowed in ME of the LCS control limit;

Marginal exceedances must be random. If the same analyte exceeds the LCS control limit repeatedly, it is an indication of a systemic problem. The source of the error must be located and corrective action taken.

The procedure to monitor the application of marginal exceedance allowance to the LCS to ensure random behavior consist of establishing a data base with all exceedances and compare the analytes affected on quarterly basis to verify is not the same analyte having the problem.

12.1.2.3 Matrix Spikes and Matrix Spike Duplicates

The procedure to determine the effect of the sample matrix on method performance is by analyzing with each preparation batch matrix spikes, matrix spikes duplicates sample duplicates and surrogates, which are designed as data quality indicators for a specific sample using the designated test method. These controls alone are not used to judge laboratory performance.

Matrix specific QC samples indicate the effect of the sample matrix on the precision and accuracy of the results generated using the selected method. The information from these controls is sample/matrix specific and would not normally be used to determine the validity of the entire batch.
The frequency of the analysis of matrix specific samples is determined as part of a systematic planning process (e.g. Data Quality Objectives) or as specified by the required mandated test method or SOP and it is at a minimum, one per batch of 20 samples or less, per matrix type.
The components to be spiked are the ones specified by the mandated test method or laboratory SOP. Matrix spikes are not performed for analytes for which spiking solutions are not available such as, solids determinations (total suspended, total dissolved, total volatile), pH, color, odor, temperature, dissolved oxygen, BOD, COD or turbidity.
The selected sample(s) for spiking are be rotated among client samples, as much as possible, so that various matrix problems may be noted and/or addressed. The spiked samples are then analyzed as the other samples in the batch and the recoveries calculated and compared with acceptance limits. Results are recorded in the LIMS, where the analysts or QA Officer can track and manage the results for QC samples. For industrial hygiene samples, unused sample collection media is used for spiking. Samples that are labeled equipment blanks, field blanks or trip blanks must no be used for matrix spiking. All efforts shall be made to obtain additional sample aliquots for matrix spiking; when bottles are prepared in house additional containers are provided for matrix spikes. If the sample containers are prepared by the client or provided by a third party, a good communication should be established with all parties involved in order to obtain enough sample aliquots to perform matrix spiking for all test methods required. If, in spite of all

efforts made, there are no extra samples received for matrix spiking, a pair of LCS/ LCS duplicate is analyzed for assessing accuracy and precision.

Any permit specified analytes, as specified by regulation or client requested analytes shall also be included. If there are no specified components, the laboratory shall spike per the following:

- For those components that interfere with an accurate assessment such as spiking simultaneously with technical chlordane, toxaphene and PCBs, the spike should be chosen that represents the chemistries and elution patterns of the components to be reported.
- For those test methods that have extremely long lists of analytes, a representative number may be chosen using the following criteria for choosing the number of analytes to be spiked, but alternating them in order to ensure that all targeted components are included in the spike mixture over a 2 year period.
- For methods that include 1-10 targets, spike all components;
- For methods that include 11-20 targets, spike at least 10 components or 80% of the total, whichever is greater;
- For methods with more than 20 targets, spike at least 16 components.

The results from matrix spike/matrix spike duplicate are primarily designed to assess the precision and accuracy of analytical results in a given matrix and are expressed as percent recovery (%R) and relative percent difference (RPD). The calculations are performed as specified in Sect.12.1.2.5.
Results are compared to the acceptance criteria as published in the mandated test method. Where there are no established criteria, the laboratory established internal criteria determined as described in Sect. 12.1.2.2 for LCSs. Poor performance in a matrix spike generally indicates a problem with the sample composition, and not the laboratory analysis and is reported to the client whose sample was used for the spike with the appropriate data qualifiers or in the case narrative to assist in data assessment.

12.1.2.4 Surrogates

For GC and GC/MS analysis, surrogate standards are added to all samples, blanks and QC samples, prior to sample preparation/extraction, for all organic chromatography test methods except when the matrix precludes its use or when a surrogate is not available. Surrogates are compounds that are very similar in their chemical and chromatographic characteristics as the target compounds but are not present in environmental samples, or at least they are not part of the target compounds list.
Results from recoveries of surrogate standards are compared with acceptance values, mandatory by the method if available or lab generated and recorded in the LIMS. Acceptance limits generated at the laboratory are established based on a minimum of 20 valid data points by calculating the mean and standard deviation, the upper limit is set at "mean + 3SD" and the lower limit at "Mean – 3SD". Surrogates outside the acceptance criteria are evaluated for the effect indicated for the individual sample results. A corrective action is initiated which is guided by the data quality objectives or other site specific requirements. Results reported from analyses with surrogate recoveries outside the acceptance criteria include appropriate data qualifiers.

12.1.2.5 Equations used for calculations

The following equations are used in the calculation of recovery and RPD:

From duplicate sample:

$$RPD = \frac{S_a - S_b}{((S_a + S_b) \div 2)} x100\%$$

Where: S_a = First sub-sample analyzed
S_b = Second sub-sample analyzed

From MS/MSD analysis:

$$RPD = \frac{R_a - R_b}{((R_a + R_b) \div 2)} x100\%$$

Where: R_a = Amount of analyte found in Matrix Spike.
R_b = Amount of analyte found in Matrix Spike Duplicate

Recovery of matrix spikes:

$$\text{Recovery} = \frac{SSR - SR}{CA} x100\%$$

Where: SSR= Results of spiked sample
SR = Results of sample (unspiked)
CA = Concentration of spike added

Surrogate recoveries:

$$\%.\text{Recovery} = \frac{ConcentrationFound}{ConcentrationAdded} x100\%$$

Where: Concentration found = Result obtained after analysis
Concentration added = Amount of surrogate spiked

12.1.2.6 Quality Control Charts

Quality Control charts can be generated at any time from data stored in the LIMS for recoveries of matrix spikes, LCSs, surrogates and RPD and they are a valuable tool to monitor in real time the performance of the analytical method, providing a graph with the mean and upper and lower warning and acceptance limits (2 and 3 standard deviation respectively).

12.1.3 External References and Control Samples

External Reference Samples or QCS are obtained from various sources are analyzed on a regular basis, minimum quarterly. Reference samples simulating matrix and analytes of interest are purchased from Environmental Resource Associates, Inc. or other NIST approved vendors, and analyzed for drinking water, wastewater, hazardous waste and priority pollutants.
Interlaboratory comparisons are run whenever possible, as well as intralaboratory comparisons by analyzing an analyte by different analytical methods.

12.2 Method Detection Limit and Reporting Limits

In general the laboratory utilizes a test method that provides a Limit of Detection (LOD) that is appropriate and relevant for the intended use of the data. LODs are determined by the protocol in the mandated test method or applicable regulation, e.g., Method Detection Limit (MDL) and all sample-processing steps of the analytical method are included. If the protocol for determining detection limits is not specified, the selection of the procedure must reflect instrument limitations and the intended application of the test method.

The MDL is defined as the minimum concentration of an analyte that can be measured and reported with 99% confidence that the analyte concentration is greater than zero.

For analytes for which spiking is a viable option, detection limits are determined by a Method Detection Limit (MDL) study for each common matrix (water and soil/solid) by the procedure described in 40CFR Part 136, Appendix B. This procedure consists of spiking seven or more aliquots of the matrix with each compound of interest, at a concentration between 3 and 5 times the estimated MDL. These spiked samples are subject to the entire analytical process and analyzed. The MDL is calculated as follows:

$$MDL = S \times t$$

Where

S	=	Standard deviation of the seven replicates.
t	=	Student's "t" value for 99% confidence for the corresponding number of degrees of freedom. For 7 replicates this number is 3.14.

The method detection limit is initially determined for the compounds of interest in each method and in each matrix (aqueous or soil/solid). Laboratory pure reagent water and Ottawa sand are used as matrices for aqueous and soil/solid matrix respectively.

The detection limit is initially determined for the compounds of interest in each test method in a matrix in which there are neither target analytes nor interferences at a concentration that would impact the results. Detection limits are repeated each time there is a change in the test method that affects how the test is performed, or when a change in instrumentation occurs that affects the sensitivity of the analysis.

The MDL studies are documented in spreadsheets created for that purpose. The documentation includes the matrix type, date of analysis, analyst name or initials, instrument used, values obtained and calculations. The raw data and supporting documents are retained, either attached to the spreadsheet used for calculation or filed by date with the general raw data.

The validity of the LOD shall be confirmed by qualitative identification of the analyte(s) in a QC sample in each quality system matrix containing the analyte at no more than 2-3X the LOD for single analyte tests and 1-4X the LOD for multiple analyte tests. This verification must be performed on every instrument that is to be used for analysis of samples and reporting of data.

A LOD study is not required for any component for which spiking solutions or quality control samples are not available such as temperature, or, when test results are not to be reported to the LOD (versus the limit of quantitation or working range of instrument calibration), according to Appendices D.1.2, D.4.5, D.5.4,

and D.6.6 of NELAC chapter 5, 2003. Where an LOD study is not performed, the laboratory may not report a value below the Limit of Quantitation.

The Limit of Quantitation (LOQ) is normally set at 10 times the standard deviation. This is equivalent to multiply the MDL (obtained for 7 replicates) by 3.18 and rounding to the nearest 1, 2 or 5. In other cases, for certain methods the reporting limit is obtained by multiplying the MDL by another factor (between 2 and 10). The reporting limit for each analyte in each method is referenced in the corresponding SOP.

The LOQ is often referenced as Reporting Level or Practical Quantitation Limit (PQL). Certain projects require reporting all detected analytes, even below the reporting limit; in this case, when an analyte is detected but it is below the PQL, it is reported with a "J" flag indicating that the concentration is only estimated.

Unless the analytical method specifies otherwise, the LOQ is confirmed for each analyte of concern by analyzing a standard at the LOQ level or near and obtaining a recovery between 50 and 150% of the true value. This confirmation is not performed for any component or property for which spiking solutions or quality control samples are not commercially available or otherwise inappropriate (e.g., pH).
In certain cases the recovery of each analyte must be within the established test method acceptance criteria or client data quality objectives for accuracy.

In some cases project-specific reporting limits are used, when the DQOs mandate a different reporting limit than the RLs used routinely by Weck Laboratories.

For potable water analysis, the Detection Limit for Reporting purposes (DLRs) is used instead of the actual MDLs or RLs. For this matrix the calculated MDL must be not greater than the DLR. DLRs are verified on regular basis by including the lowest calibration point at or below the DLR.

12.3 Selectivity

Absolute retention time and relative retention time aid in the identification of components in chromatographic analyses and to evaluate the effectiveness of a column to separate constituents.
Acceptance criteria for retention time windows are documented in the corresponding method SOP or in the SOP ORG074.
A confirmation shall be performed to verify the compound identification when positive results are detected on a sample from a location that has not been previously tested by the laboratory. Such confirmations shall be performed on organic tests such as pesticides, herbicides, or acid extractable or when recommended by the analytical test method except when the analysis involves the use of a mass spectrometer. Confirmation is required unless stipulated in writing by the client. The confirmation is documented in the bench sheets and/or the LIMS.
Other procedures for evaluating selectivity are described in the analytical methods, which may include mass spectral tuning, ICP inter-element interference checks, sample blanks, spectrochemical absorption or fluorescence profiles, co-precipitation evaluations, and electrode response factors.
Acceptance criteria for mass spectral tuning are contained in the corresponding SOPs.

12.4 Demonstration of Method Capability

Prior to acceptance and use of any method, satisfactory initial demonstration of method performance is required. The initial demonstration of method performance is performed each time there is a significant change in instrument type, personnel or test method. The process is described in Appendix 9. A

Certification Statement is completed for each analyst documenting that this activity has been performed (Appendix 9). The associated records supporting the activity are also retained at the laboratory and they are available to reproduce the analytical results summarized in the Certification Statement.
The demonstration of method capability consists of performing the analysis on a clean quality system matrix, which has been spiked with the compounds of interest or purchased from a certified vendor.
For analysis that require the use of a specialized "work cell" (a group consisting of analysts with specifically defined tasks that together perform the test method), the group as a unit performs the IDC. The supporting documentation is also kept at the laboratory.
When a work cell is employed, and the members of the cell change, the new employee works with experienced analysts in the specialty area and this new work cell demonstrates acceptable performance through acceptable continuing performance checks, such as laboratory control samples. This continued performance check is documented and the four preparation batches following the change in personnel is monitored to ensure that none of the batches result in the failure of any batch acceptance criteria (method blank and laboratory control sample). If there is a failure, the demonstration of capability is repeated.
When the entire work cell is changed or replaced, the new work cell repeats the demonstration of capability (Appendix 9).
When a work cell(s) is employed the performance of the group (work cell) is linked to the training records of the individual members of the work cell.

For test methods that has been in use by the laboratory before July 1999, and there have been no significant changes in instrument type, personnel or test method, the continuing demonstration of method performance and the analyst's documentation of continued proficiency is considered acceptable. Records are kept on file to demonstrate that a demonstration of capability is not required.

12.5 Performance and Proficiency Testing Programs

The following are the proficiency testing programs in which the laboratory currently participates on regular basis:

12.5.1 Drinking water analysis: WS Studies

12.5.2 Wastewater analysis: WP studies

12.5.3 Hazardous waste and soil

12.5.4 Bacteriological Performance Evaluation Study.

The Proficiency Testing samples are purchased from NIST approved vendors.

The laboratory participates in other special PT programs managed by government agencies or private entities.

12.6 Additional Quality Control Checks

The laboratory shall assure that the test instruments consistently operate within the specifications required of the application for which the equipment is used.

Glassware shall be cleaned to meet the sensitivity of the test method. The cleaning and storage procedures that are not the specified by the test method are documented in the method SOPs or in SOP MIS028 for cleaning protocols.

Whenever possible, additional QC checks are performed such as running a sample using different techniques and different standards (EPA Method 602 & EPA Method 624), correlations between COD, BOD and TOC; TDS & Specific Conductivity, balance between cations and anions on water analysis, etc.

12.7 Estimation of Uncertainty of Measurement

A procedure to estimate the uncertainty of measurement for all analytical methods used at the laboratory has been established.
In certain cases the nature of the test method may preclude rigorous, metrologically and statistically valid, calculation of uncertainty of measurement. In these cases the laboratory shall attempt to identify all the components of uncertainty and make a reasonable estimation, and shall ensure that the form of reporting of the result does not give a wrong impression of the uncertainty. Reasonable estimation shall be based on knowledge of the performance of the method and on the measurement scope and shall make use of, for example, previous experience and validation data.
The need of estimating uncertainty will be considered satisfied where a well-recognized test method specifies limits to the values of the major sources of uncertainty of measurement and specifies the form of presentation of calculated results and the test method and reporting instructions are followed appropriately.
When estimating the uncertainty of measurement, all uncertainty components which are of importance in the given situation shall be taken into account using appropriate methods of analysis.

13. DATA REDUCTION, VERIFICATION AND REPORTING

13.1 Laboratory worksheets - Raw data documentation

Upon acceptable receipt of samples by the laboratory, sample worksheets are generated for the required testing. These worksheets are distributed to the respective laboratory departments.

The data that is being obtained, such as weights, extraction volumes, calculations, etc. are recorded in the worksheets or in the LIMS. "Bench sheets" are generated either from the data entered in the LIMS or manually for all raw data being produced.

After raw data is entered in the corresponding worksheets and run logs, it is initialed by the analyst and saved chronologically for future review. All electronic raw data is stored in magnetic tapes or CDs.

13.2 Data Reduction and Review

Some instruments have a computerized data reduction and calculation, such as GC/MS, HPLC, GC and ICP. The protocols to perform these tasks are described in the corresponding SOPs and the computer programs used for data reduction are validated before use and checked periodically by manual calculations. The results obtained from computer data reduction are double checked by the analyst and transferred directly to the LIMS, whenever possible, or manually entered. Most methods have a Data Review Checklist that is completed by the analyst and addresses all the required QC determinations.
A supervisor or second analyst performs a secondary review of the raw data (e.g. chromatograms and reports summary) for proper integration of peaks, identification of compounds, QC, etc. If a discrepancy is

noted, the package is returned to the primary analyst for corrective action. For analyses that do not have automatic data reduction, the analyst performs the necessary calculations to obtain the final result, and then the results are reviewed by the supervisor or second analyst.

All information used in the calculations (e.g. raw data, calibration files, tuning records, results of standard additions, interference check results, sample response, and blank or background correction protocols) as well as sample preparation information (e.g. weight or volume of sample used, percent dry weight for solids, extract volume, dilution factor used) are recorded in order to enable reconstruction of the final result.

As described in Section 16, the results of the quality control sample analysis are reviewed, and evaluated before data are reported.

After the results are entered into the LIMS they are verified for completeness and correctness and if no discrepancies are encountered they are released for reporting.

13.3 Report Format and Contents

After the data is entered in the LIMS and approved, a report or "Certificate of Analysis" is generated from the information contained in the LIMS database. The certificate of analysis, containing the results of each test, or series of tests, is then submitted with all supporting documentation to the person who signs it. The signatory personnel include the Lab Director, The QA Officer, the QA Officer designee, and the Technical Directors.

The analytical report, of which the Chain of Custody Document is part, contains the following information, at a minimum:

- Header with complete laboratory information.
- Unique identification of each page and an indication of the total number of pages included in the report
- Client's information (Company name, address, contact person, etc.)
- Project name or number
- Lab ID number assigned to the sample (unique identification number).
- Description and unambiguous identification of the sample(s) including the client identification code.
- Sample login information (date, time and initials of person that received the sample)
- Sampling information (date, time, name of sampler)
- If the laboratory collected the sample, reference to sampling procedure.
- Analysis performed.
- Results obtained with reporting units
- Date of preparation and analysis
- Time of preparation and/or analysis for tests with holding times of equal or less than 72 hours when required to demonstrate that the test was performed within holding times (the time of preparation/analysis can be entered in the case narrative section of the report).
- Name of method used for preparation and analysis
- Minimum Reporting Level or PQL
- Identification of results for any sample that did not meet sample acceptance requirements.
- Signature of authorized person (Lab Manager, Lab Director, etc.)
- Any additional information that is important to be reported.

- Any deviations from, additions to, or exclusion from SOPs; any conditions that may have affected the quality of results and any failures (such as failed quality control), including the use and definitions of data qualifiers (appendix 12).
- Measurements, examinations and derived results, supported by tables, graphs, sketches and photographs as appropriate, and any failures identified; identification of whether data are calculated on dry weight basis; identification of the reporting units such as ug/l or mg/kg
- Clear identification of all test data provided by outside sources, such as subcontracted laboratories, clients, etc.
- Clear identification of numerical results with values below the RL (J qualifier).

Exceptions to this standard approach for reporting are allowed with the approval of the Technical Director and are documented.

Any result not obtained in accordance with the approved method and the lab QA Plan by use of proper lab technique, must be documented as such in the case narrative section of the Certificate of Analysis.

Material amendments to a test report after issue are made only in the form of a further document, or data transfer including the statement "Supplement to Certificate of Analysis, identification number".

Clients are notified promptly, in writing, of any event such as the identification of defective measuring or test equipment that cast doubt on the validity of results given in any test report or amendment to a report.

Test results are certified to meet all requirements of the NELAC standards, or reasons are provided if they do not.
After signed, the Certificates of Analysis are sent to the client by US mail. In some cases the report is submitted by facsimile, electronically or electromagnetically. In this last case, all reasonable steps are taken to preserve confidentiality and the data is only sent to fax numbers or email addresses properly authorized by the client. Hard copies are submitted by US Mail.

13.4 Records

Records provide the direct evidence and support for the necessary technical interpretations, judgments, and discussions concerning laboratory results. These records, particularly those that are anticipated to be used as evidentiary data, provide the historical evidence needed for later reviews and analyses. Records must be legible, identifiable, and retrievable, and protected against damage, deterioration or loss. All records referenced in this section are retained for a minimum of ten years.

The laboratory has established and maintain procedures to control all documents that form part of its quality system (internally generated or from external sources), such as regulations, standards, other normative documents, environmental test and/or calibration methods, as well as drawings, software, specifications, instructions and manuals. Documents include policy statements, procedures, specifications, calibration tables, charts, textbooks, posters, notices, memoranda, software, drawings, plans, etc. These may be on various media, whether hard copy or electronic, and they may be digital, analog, photographic or written.
A procedure has been established to review and approve for use by authorized personnel prior to issue, all documents issued to personnel in the laboratory as part of the quality system. The procedure also establishes a document control system and the policy to be followed with invalid and/or obsolete documents.

Laboratory records generally consist of bound notebooks with pre-numbered pages, official laboratory worksheets, personnel qualifications and training forms, facilities, Corrective Action reports, PT records, equipment maintenance and calibration forms, chain-of-custody forms, sample analysis request forms, and analytical change request forms. All records are recorded in indelible ink and retained for ten years. Records that are stored or generated by computers have hard copy or write protected backup copies. Electronic records are supported by the hardware and software necessary for their retrieval.

Any documentation changes are corrected by drawing a single line through the change so that it remains legible and is initialed by the responsible individual, along with the date of change and reason. The correction is written adjacent to the error. Strip-chart recorder or computer printouts are signed by the person who performed the instrumental analysis. If corrections need to be made in computerized data, a system parallel to the corrections for handwritten data is used.
In the event the Laboratory is sold, all past records shall be transferred to the custody of the new legal owner or operator of the Laboratory.
This management however shall maintain responsibility and accountability for laboratory work performed prior to the transfer. A written statement to this effect shall be provided.
The new owner/operator shall be accountable and liable for all work performed after the transfer date and he/she shall provide a written statement to that effect.
In the case the laboratory goes out of business, the present management shall maintain custody of all records and make them available to clients for a period of ten years.

Laboratory records include the following:

13.4.1 Standard Operating Procedures

SOPs are controlled documents. They are reviewed on regular basis and if there are any revisions, these are distributed to all affected individuals to ensure implementation of changes. All revisions of SOPs are archived.

13.4.2 Equipment Maintenance Documentation

Documents detailing the receipt and specification of analytical equipment are retained. A history of the maintenance record of each system serves as an indication of the adequacy of maintenance schedules and parts inventory. As appropriate, the maintenance guidelines of the equipment manufacturer are followed. When maintenance is necessary, it is documented in either standard forms or in logbooks.

13.4.3 Calibration Records and Traceability of Standards/Reagents

The frequency, conditions, standards, reagents and records reflecting the calibration history of a measurement system are recorded. These include but are not limited to the source of standards and reagents, receipt, preparation and use.

The overall program of calibration and/or verification and validation of equipment is designed and operated so as to ensure that measurements made by the laboratory are traceable to national standards of measurement.
Calibration certificates indicate the traceability to national standards of measurement and provide the measurement results and associated uncertainty of measurement and/or a statement of compliance with an identified metrological specification. The laboratory maintains records of all such certifications.

Where traceability to national standards of measurement is not applicable, the laboratory will provide evidence of correlation of results by participation in a suitable program of interlaboratory comparisons, proficiency testing, independent analysis or other suitable means.

13.4.4 Sample Management

A record of all procedures to which a sample is subjected while in the possession of the laboratory is maintained, including the personnel involved in each activity. These include records pertaining to:

- Sample preservation including appropriateness of sample container and compliance with holding time requirements.
- Sample identification, receipt, acceptance or rejection and log-in
- Sample storage and tracking including shipping receipts, transmittal forms, and internal routing and assignment records.
- Disposal of hazardous samples including the date of sample or sub-sample disposal and name of responsible person.
- Automated sample handling systems

13.4.5 Original Data

The raw data and calculated results for all samples is maintained in laboratory notebooks, logs, bench sheets, files or other sample tracking or data entry forms. Instrumental output is stored in a computer file and/or a hard copy report. These records include:

- Laboratory sample ID code
- Date of analysis
- Instrumentation identification and instrument operating conditions/parameters
- Analysis type and sample preparation information, including sample aliquots processed, cleanup, and separation protocols.
- All manual, automated, or statistical calculations
- Confirmatory analysis data, when required to be performed
- Review history of sample data
- Analyst's or operator's initials/signature
- All data generated, except those that are generated by an automated data collection system, are recorded directly, promptly and legibly in permanent ink.
- Date and time of analysis (including extractions) is recorded when the hold time is 72 hours or less.

13.4.6 QC Data

The raw data and calculated results for all QC samples and standards are maintained in the manner described in 13.4.5. Documentation allows correlation of sample results with associated QC data. Documentation also includes the source and lot numbers of standards for traceability. QC samples include, but are not limited to, control samples, method blanks, matrix spikes and matrix spike duplicates.

13.4.7 Correspondence

Correspondence pertinent to a project is kept and placed in the project files.

13.4.8 Deviations

When a deviation from a documented policy occurs, including SOPs, analytical methods, QA/QC criteria, etc., the laboratory notifies this to the client in the Certificate of Analysis under the case narrative section or on a supplemental report indicating the deviation and the reasons for it.
All deviations from SOPs are reviewed and approved by the QA Officer or Technical Director.
When mistakes occur in records, each mistake is crossed out, leaving it legible, and the correct value and initials of person making the correction are entered alongside.
When corrections are due to reasons other than transcription errors, the reason for the correction is documented.

13.4.9 Final Reports

Copies of final reports are kept in each client's file, along with supporting documentation

13.4.10 Administrative Records

The following are maintained:

- Personnel qualifications, experience and training records
- Initial and continuing demonstration of proficiency for each analyst
- A log of names, initials and signatures for all individuals who are responsible for signing or initialing any laboratory record.

13.5 Document Control System

A document control system is used to ensure that all personnel have access to current policies and procedures at all times. Documents, which are managed by this system, include this Quality Manual and all SOPs. The system consists of a document review, revision and approval system, and document control and distribution.

All quality documents (this manual, SOPs, policies, etc.) are reviewed and approved by the QA Officer, the Technical Director and the Laboratory Director. Such documents are revised whenever the activity described changes significantly. All documents are reviewed at least every 5 years, with the exception of the QA Manual, which is reviewed annually.

All QA/QC documents are controlled by the QA Officer. Controlled copies are provided to individuals in the laboratory who need copies. The QA Officer maintains a distribution list for controlled copies and ensures that any revisions are distributed appropriately.

13.6 Confidentiality

All analytical reports, results, electronic records and transmission of results are kept in confidence to the customer who requested the analyses and only released to third parties with written permission from a properly authorized representative of the client. This information includes, but is not limited to COCs, Certificates of Analysis, raw data, bench sheets, electronic information and sample results.
In addition no information pertaining to clients is posted in public areas where the access is not restricted.
Access to laboratory records and LIMS data is limited to authorized laboratory personnel except with the permission of the QA Officer or Laboratory Director. NELAP-related records are made available to authorized accrediting authority personnel.

13.7 Service to the Client

The laboratory shall afford clients or their representatives' cooperation to clarify the client's request and to monitor the laboratory's performance in relation to the work performed, provided that the laboratory ensures confidentiality to other clients.

14 PERFORMANCE AND SYSTEM AUDITS AND FREQUENCY

14.1 Internal Laboratory Audits

Annual internal audits are performed to verify that laboratory operations continue to comply with the requirements of the quality system and the corresponding NELAC Standard. The internal audit program shall address all elements of the quality system, including all of the environmental testing activities.
The quality assurance officer plans and organizes internal audits as required by a predetermined schedule and requested by management. Such audits are performed by the Quality Assurance Officer or personnel designated by the QA officer, who are by trained and qualified and wherever resources permit, independent of the activity to be audited. Technical personnel are not allowed to audit their own activities unless it can be thoroughly demonstrated that an effective audit will be carried out.
Where the audit findings cast doubt on the correctness or validity of the laboratory's results, an immediate corrective action is initiated and any client must be notified in writing within 30 days of the finding if investigations show that the laboratory results may have been affected.
The laboratory shall notify clients promptly, in writing, of any event such as the identification of defective measuring or test equipment that casts doubt on the validity of results given in test report or test certificate or amendment to a report or certificate.
The internal system audits include an examination of laboratory documentation on sample receiving, sample log-in, sample storage, chain-of-custody procedures, sample preparation and analysis, instrument operating records, etc.

14.2 Management Review

At least once per year, laboratory executive management conducts a review of the quality system and environmental testing activities to ensure its continuing suitability and effectiveness and to introduce any necessary changes or improvements in the quality system and laboratory operations. The review takes account of the following:

- The suitability of policies and procedures;
- Reports from managerial and supervisory personnel;
- The outcome of recent internal audits;
- Corrective and preventive actions;
- Assessments by external bodies;
- The results of interlaboratory comparisons or proficiency tests;
- Changes in the volume and type of the work;
- Client feedback;
- Complaints;
- Other relevant factors, such as quality control activities, resources and staff training.

The managerial review is performed according to specified procedures detailed in the corresponding SOP and the records of review findings and actions are kept at the laboratory.

The area of activity audited, the audit findings and corrective actions that arise from them shall be recorded. The laboratory management shall ensure that these actions are discharged within the agreed time frame as indicated in this QA manual and/or in the corresponding SOPs.
Follow-up audit activities shall verify and record the implementation and effectiveness of the corrective action taken.
The management shall ensure that those actions are carried out within an appropriate and agreed timescale.
The laboratory, as part of their overall internal auditing program, shall insure that a review is conducted with respect to any evidence of inappropriate actions or vulnerabilities related to data integrity. Discovery of potential issues shall be handled in a confidential manner until such time as a follow up evaluation, full investigation, or other appropriate actions have been completed and the issues clarified. All investigations that result in finding of inappropriate activity shall be documented and shall include any disciplinary actions involved, corrective actions taken, and all appropriate notifications of clients. All documentation of these investigation and actions taken shall be maintained for 10 years.

15 FACILITIES, EQUIPMENT AND REAGENTS

15.1 Facilities

The Laboratory is segregated into different areas for operations that are not compatible with each other. This separation prevents contamination of low levels of common laboratory solvents in the volatile organics analyses and maintains culture handling or incubation areas segregated from other areas.
The access to the volatile organics laboratory and microbiology laboratory is restricted to appropriate personnel only; signs to that effect are posted on the entry doors of these areas.
It is the policy of the company to assure that the facilities housing the laboratory and the workspaces are adequate to perform the analyses for which it is accredited. These include physical space, energy sources, lighting and environmental conditions, sufficient storage space, workbenches, ventilation, utilities, access and entryways to the laboratory, sample receipt area(s), sample storage area(s), chemical and waste storage area(s); and data handling and storage area(s). For microbiology, floors and work surfaces shall be non-absorbent and easy to clean and disinfect. Work surfaces shall be adequately sealed and shall be clean and free from dust accumulation. Plants, food, and drink shall be prohibited from the laboratory work area. The company will procure to improve the condition of the facilities whenever possible and make plans for future expansions or improvements.

The laboratory, as per Standard Operating Procedures, monitors, control and record environmental conditions as required by the relevant specifications, methods and procedures or where they influence the quality of the results, for example monitoring biological sterility and other environmental effects, as appropriate to the technical activities concerned. Environmental tests shall be stopped when the environmental conditions jeopardize the results of the environmental tests and/or calibrations.

Adequate measures are taken to ensure good housekeeping in the laboratory and to ensure that any contamination does not adversely affect data quality.

15.2 Equipment Maintenance

Records are maintained for all major equipment, including documentation of all routine and non-routine maintenance activities.

The records include:

- The name of the equipment
- The manufacturer's name, type identification, and serial number or other unique identification of the equipment and its software.
- Date received and date placed in service (if available)
- Current location, where appropriate.
- If available, condition when received (e.g. new, used, reconditioned)
- Dates and results of calibrations, if appropriate
- Details of routine and non-routine maintenance carried out to date and planned for the future
- History of any damage, malfunction, modification or repair

When purchasing new laboratory equipment and accessories, only reputable brands will be considered and always the instruments that have the best quality shall be considered, regardless of the difference in price with a similar instrument, considered of an inferior quality.

Instruments and equipment are maintained in optimum condition. Frequent inspections, routine preventative maintenance, prompt service, etc. ensure optimal performance.

It is the policy of the company to provide analytical instruments and software adequate to meet the method requirements and the quality control operations specified in both NELAC and the individual methods. Older instruments shall be replaced with newer ones as technology improves and efforts shall be made to provide a greater degree of automation and security in analytical instruments. A list of major instruments and reference materials is in Appendix 4.

Equipment shall be operated by authorized personnel. Up-to-date instructions on the use and maintenance of equipment (including any relevant manuals provided by the manufacturer of the equipment) shall be readily available for use by the appropriate laboratory personnel.

Service contracts or agreements with the manufacturer or instrument Maintenance Company are maintained for the following instruments:

- ICP and/or ICP-MS instruments for metal analysis
- GC/MS units for volatile organics
- Purge and Trap systems and autosamplers
- GC/MS units for semi-volatile organics

The analyst in charge of each particular instrument performs preventive maintenance for all other analytical instruments.

All maintenance and repairs are thoroughly documented in logbooks, with information pertaining to the description of the problem or routine maintenance, date of occurrence and name of person that performed the maintenance operation.

A routine preventive maintenance program is used to minimize the occurrence of instrument failure and other system malfunctions. Designated employees regularly perform routine scheduled maintenance and repair of instruments. They also check that equipment complies with the specifications, design a plan for maintenance, where appropriate, and verify that the maintenance is carried out to date. All laboratory instruments are maintained according with manufacturer's specifications.

Any item of the equipment which has been subjected to overloading or mishandling, or which gives suspect results, or has been shown by verification or otherwise to be defective, is taken out of service, isolated to prevent its use or clearly labeled as being out of service until it has been repaired and shown by calibration, verification or test to perform satisfactorily. The laboratory will examine the effect of this defect or departure from specified limits on previous tests and shall institute the "Control of nonconforming work" or Corrective Action procedures.

The equipment and its software used for testing, calibration and sampling used at the laboratory is capable of achieving the accuracy required and comply with specifications relevant to the environmental tests concerned. Calibration programs are established for key quantities or values of the instruments where these properties have a significant effect on the results. All new analytical and sampling equipment is calibrated or checked to establish that it meets the laboratory's specification requirements and complies with the relevant standard specifications before being placed into service. All pieces of equipment are calibrated or checked before use.

Whenever practicable, all equipment under the control of the laboratory and requiring calibration shall be labeled, coded or otherwise identified to indicate the status of calibration, including the date when last calibrated and the date or expiration criteria when recalibration is due.

When, for whatever reason, equipment goes outside the direct control of the laboratory, the laboratory shall ensure that the function and calibration status of the equipment are checked and shown to be satisfactory before the equipment is returned to service.

Test and calibration equipment, including both hardware and software, shall be safeguarded from adjustments which would invalidate the test and/or calibration results.

Glassware is cleaned to meet the sensitivity of the method. Any cleaning and storage procedures that are not specified by the method are documented in laboratory records or SOPs.

15.3 Reagents and Chemicals

The reagents and chemicals used in the laboratory are obtained from reputable suppliers that have proven consistency over the years. Purity specifications are chosen based on the analysis and this is always verified by the analysis of solvent blanks and check standards. The following are some of the reagents used:

- Solvents used for Gas Chromatography and GC/MS are "organic residue analysis" grade.
- Methanol used for volatile organics by GC or GC/MS is "Purge and Trap" grade.
- All inorganic chemicals are "reagent grade" or better, depending of the requirement.
- Nitric acid used for preparation of standards for ICP/MS analysis is "trace metals".

The quality of reagent water sources is monitored and documented to meet method specific requirements. If the method does not specify the grade, "Analytical Reagent Grade" will be used.

15.4 Analytical Standards and Reference Materials

In general the Laboratory uses reference materials that are traceable, when possible to SI units of measurement, or to certified reference materials. Where possible, traceability shall be to national or international standards of measurement, or to national or international standard reference materials. Internal reference materials are checked as far as is technically and economically practicable.

Most of the standards used are purchased as certified solutions from qualified vendors. These stock standards are traceable to NIST, the corresponding documentation, including certificate of analysis or purity, date of receipt, recommended storage conditions, expiration date, etc., is maintained in laboratory files.

The original containers provided by the vendor are labeled with an expiration date.

All analytical standards received at the laboratory are inspected for appearance and expiration date, if any. They are recorded in the LIMS, which assigns a unique identification number. All chemicals received are also inspected and recorded into a book to assure traceability. The identification number is referenced when a dilution of the stock is made or when a reagent solution is prepared.

All reference materials after they have been properly inspected and logged in, are handled, transported, stored and used, according to the manufacturer's instructions in order to prevent contamination or deterioration and to protect their integrity.

Analytical standards prepared in the laboratory are prepared from certified stock solutions or pure product. Quality Control Standards (QCS) are prepared or obtained from a separate source other than the working standards.

The management does not reject any request from technical personnel to obtain a reference material or any type of instrument or chemical that he or she considers essential for the normal operation of the laboratory.

15.5 Computers and Electronic Data Related Requirements

Where computers or automated equipment are used for the acquisition, processing, recording, reporting, storage or retrieval of test data the following are taken into consideration:

- Computer software developed by the user is documented in sufficient detail and is suitably validated as being adequate for use;
- Procedures are established and implemented for protecting the data; including, but not limited to, integrity and confidentiality of data entry or collection, data storage, data transmission and data processing;
- Computers and automated equipment are maintained to ensure proper functioning and are provided with the environmental and operating conditions necessary to maintain the integrity of environmental test data.
- Establishment and implementation of appropriate procedures for the maintenance of security of data including the prevention of unauthorized access to, and the unauthorized amendment of, computer records.
- Commercial off-the-shelf software (e. g. word processing, database and statistical programs) in general use within their designed application range is considered to be sufficiently validated, however, laboratory software configuration or modifications must be validated.

16 SPECIFIC ROUTINE PROCEDURES USED TO EVALUATE DATA QUALITY

Quality control acceptance criteria are used to determine the validity of the data based on the analysis of internal quality control check (QC) samples (see section 11). The specific QC samples and acceptance

criteria are found in the laboratory SOPs. Typically, acceptance criteria are taken from published EPA methods. Where no EPA criteria exist, laboratory generated acceptance criteria are established. Acceptance criteria for bias are based on historical mean recovery plus minus three standard deviation units, and acceptance criteria for precision range from zero (no difference between duplicate control samples) to the historical mean relative percent difference plus three standard deviation units.

Analytical data generated with QC samples that fall within prescribed acceptance criteria indicate the laboratory was in control. Data generated with QC samples that fall outside the established acceptance criteria indicate the laboratory was "out of control" for the failing tests. These data are considered suspect and the corresponding samples are reanalyzed or reported with qualifiers.

Many published EPA methods do not contain recommended acceptance criteria for QC sample results. In these situations, Weck Laboratories, Inc. uses 70 – 130 % as interim acceptance criteria for recoveries of spiked analytes, until in-house limits are developed. In-house limits are based on a 95% confidence interval and must include a minimum of 20 data points.

16.1 Laboratory Control Samples

A Laboratory Control Sample is analyzed with each batch of samples to verify that the accuracy of the analytical process is within the expected performance of the method.
The results of the LCS are compared to acceptance criteria to determine usability of the data. Data generated with LCS samples that fall outside the established acceptance criteria are judged to be out-of-control. These data are considered suspect and the corresponding samples are reanalyzed or reported with qualifiers.
LCS samples are prepared in each corresponding matrix (reagent water for aqueous and Ottawa sand for soil/solid), which must be free of the target analytes to be analyzed.

16.2 Matrix Spikes/Matrix Spike Duplicates

Results from MS/MSD analyses are primarily designed to assess data quality in a given matrix, and not laboratory performance. In general, if the LCS results are within acceptance criteria, performance problems with MS/MSD results may either be related to the specific sample matrix or to an inappropriate choice of extraction, cleanup, or determinative methods. If any individual percent recovery in the matrix spike (or matrix spike duplicate) falls outside the designated acceptance criteria, Weck Laboratories, Inc. will determine if the poor recovery is related to a matrix effect or a laboratory performance problem. A matrix effect is indicated if the LCS data are within acceptance criteria but the matrix spike data exceed the acceptance criteria.

16.3 Surrogates Recoveries

Surrogates are exclusively used in organic analysis. Surrogate recovery data from individual samples are compared to surrogate recovery acceptance criteria in the methods. As for MS/MSD results, surrogate recoveries are used primarily to evaluate data quality and not laboratory performance.

16.4 Method Blanks

Method blank analyses are used to assess acceptance of sample results. The source of contamination is investigated and measures taken to correct, minimize or eliminate the problem in the situations detailed in Section 12.1.1.

Any sample associated with the contaminated blank is reprocessed for analysis or the results reported with appropriate qualifying codes.

17 CORRECTIVE ACTION AND PREVENTIVE ACTION

17.1 Corrective Action

Corrective action is the process of identifying, recommending, approving and implementing measures to counter unacceptable procedures or out of control QC performance that can affect data quality. To the extent possible, samples are reported only if all quality control measures are acceptable. If a quality control measure is found to be out of control, and the data is to be reported, all samples associated with the failed quality control measure are reported with the appropriate data qualifier(s). Sample results may also be qualified when holding times are not met, improper sample containers and/or preservatives are used or when other deviations from laboratory standard practices and procedures occur.

Corrective action in the laboratory may occur prior to, during and after initial analyses. A number of conditions such as broken sample containers, multiple phases, low or high pH readings, and potentially high concentration samples may be identified during sample login or just prior to analysis. The SOPs specify conditions during and after analysis that may automatically trigger corrective action or optional procedures. These conditions may include dilution of samples, additional sample extract cleanup, and automatic reinjection/reanalysis when certain QC criteria are not met.

Any QC sample result outside of acceptance limits requires corrective action. Once the problem has been identified and addressed, corrective action may include the reanalysis of samples, or appropriately qualifying the results.

The analyst will identify the need for corrective action. The Technical Director will approve the required corrective action to be implemented by the laboratory staff. The QA Officer will ensure implementation and documentation of the corrective action.

Corrective actions are performed prior to release of the data from the laboratory. The corrective action will be documented in both a corrective action log (Appendix 10), signed by the personnel involved, and the narrative in data report.

Where a complaint, or any other circumstance, raises doubt concerning the laboratory's compliance with the laboratory's policies or procedures, or with the quality of the laboratory's tests, the laboratory shall ensure that those areas of activity and responsibility involved are promptly audited in accordance with internal audit procedures established under this QA Manual. All complaints received at the laboratory from clients or other parties shall be treated according to the corresponding standard operating procedure for its resolution. Records of the compliant and subsequent actions are maintained for future review.

There are some cases in which the QC checks do not fail but the analyst or supervisor discovers that an unexpected or contradictory result has been obtained. These situations are considered also as "Out-Of-Control" and an investigation is carried out.

The investigations/corrective action procedures include but are not limited to:

- Identification of the individuals responsible for assessing each QC data type

- Identification of the individuals responsible for initiating and/or recommending corrective actions
- Definition of how the analyst should treat the data set if the associated QC measurements are unacceptable
- Investigate the probable cause of irregularity and determine the root cause(s) of the problem.
- Review the sample's documented history.
- Review the documentation for errors.
- Scrutinize the sample preparation (digestion, extraction, dilutions, cleanup, etc.)
- Verify standards with reference materials.
- Re-analyze the sample if possible.
- Investigate alternate methodologies.
- If the event is determined to be matrix dependent the data is reported with a qualifier.
- Definition of how out-of-control situations and subsequent corrective actions are to be documented
- Definitions of how management, including the QA Officer, review corrective action reports

Where corrective action is needed, the laboratory shall identify potential corrective actions. It shall select and implement the action(s) most likely to eliminate the problem and to prevent recurrence.

Corrective actions shall be to a degree appropriate to the magnitude and the risk of the problem. The laboratory shall document and implement any required changes resulting from corrective action investigations.

The laboratory shall monitor the results to ensure that the corrective actions taken have been effective.

Where the identification of nonconformances or departures casts doubts on the laboratory's compliance with its own policies and procedures, or on its compliance with the NELAC Standard, the laboratory shall ensure that the appropriate areas of activity are audited in accordance with Section 14.1 of this Manual, Internal Laboratory Audits as soon as possible.

17.2 Preventive Action

Preventive action is a pro-active process to identify opportunities for improvement rather than a reaction to the identification of problems or complaints.

Needed improvements and potential sources of nonconformances, either technical or concerning the quality system, shall be identified. If preventive action is required, action plans shall be developed, implemented and monitored to reduce the likelihood of the occurrence of such nonconformances and to take advantage of the opportunities for improvement.

Procedures for preventive actions shall include the initiation of such actions and application of controls to ensure that they are effective.

18 SUBCONTRACTING AND SUPPORT SERVICES AND SUPPLIES

18.1 Subcontracted Laboratory Services

A subcontracted laboratory will be used only if Weck Laboratories does not have the capability of performing the requested test, because of unforeseen reasons (e. g. workload, need for further expertise or temporary incapacity) or if the client specifically requests a particular analysis to be subcontracted.
Weck Laboratories advises the client in writing or by other means of its intention to subcontract any portion of the testing to another party, and when appropriate, gain the approval of the client, preferably in writing.
When subcontracting any part of the testing, this work will be placed with a laboratory accredited under NELAP for the tests to be performed or with a laboratory that meets applicable statutory and regulatory requirements for performing the tests and submitting the results of tests performed.
The corresponding records demonstrating that the above requirements are met are retained (e.g. copies of the subcontracted lab certifications, communications with the client, etc.)
When subcontracted laboratories are used, this is indicated in the Certificate of Analysis and a copy of the subcontractor's report is kept in file in case the client requests it at a later time. Subcontracted work performed by non-NELAP accredited laboratories is also clearly identified in the final report.
Weck Laboratories is responsible to the client for the subcontractor's work, except in the case where the client or a regulatory authority specifies which subcontractor is to be used.
A register of all subcontractors that are routinely used by the laboratory is kept on file, along with evidence of certifications.

18.2 Outside Support Services and Supplies

Weck Laboratories, Inc. only uses those outside support services and supplies that are of adequate quality to sustain confidence in the laboratory's tests. Records of all suppliers for support services or supplies required for tests are maintained.

19 REFERENCES

19.1 NELAC 2002 Standards
19.2 Interim Guidelines and Specifications for Preparing Quality Assurance Project Plans,
19.3 QAMS-005/80, December 29, 1980, Office of Monitoring Systems and Quality Assurance, ORD, USEPA, Washington, DC 20460
19.4 RCRA QAPP Instructions, USEPA Region 5, Revision: April 1998
19.5 ASTM D-5283-92. Generation of Environmental Data Related to Waste Management Activities: Quality Assurance and Quality Control Planning and Implementation.
19.6 American National Standards Specifications and Guidelines for Quality Systems for Environmental Data Collection and Environmental Technology Programs (ANSI/ASQC E-4), 1994.
19.7 EPA 2185 – Good Automated Laboratory Practices, 1995
19.8 ISO/IEC Guide 25: 1990. General Requirements for the Competence of Calibration and Testing Laboratories.
19.9 QA/R-2: EPA Requirements for Quality Management Plans, August 1994.
19.10 QA/G-4: Guidance for the Data Quality Objectives Process EPA/600/R-96/055, September 1994.
19.11 A/R-5: EPA Requirements for Quality Assurance Project Plans Draft – November 1997
19.12 QA/G-5: Guidance on Quality Assurance Project Plans EPA/600/R-98/018, February 1998.
19.13 A/G-6: Guidance for the Preparation of Standard Operating Procedures for Quality Related Operations EPA/600/R-96/027, November 1995.

19.14 A/G-9: Guidance for the Data Quality Assessment: Practical Methods for Data Analysis EPA/600/R-96/084, January 1998.

19.15 Manual for the Certification of Laboratories Analyzing Drinking Water EPA/570/9-90/008.

Appendix Detail

Appendix 1	**Resumes of Key Personnel**
Appendix 2	**Code of Ethics**
Appendix 3	**Organization Chart**
Appendix 4	**List of Major Equipment**
Appendix 5	**Chain of Custody Form**
Appendix 6	**Sample Collection and Holding Times**
Appendix 7	**List of SOPs**
Appendix 8	**Acceptance Limits for QC Determinations**
Appendix 9	**Initial Demonstration of Capability Procedure**
Appendix 10	**Corrective Action Report Form**
Appendix 11	**Laboratory Accreditations**
Appendix 12	**Flags Used for Data Qualifiers**

APPENDIX 1
RESUMES OF KEY PERSONNEL

Name	Position
Alfredo Pierri	President/Laboratory Director
Alan Ching	QA Officer/Technical Director Organic Analyses
Joe Chau	Technical Director Inorganic Analyses
Ricci Tipon	Technical Director GC/MS and Senior Chemist
Hai-Van Nguyen	Technical Director Microbiology

ALFREDO E. PIERRI

Title

President, Laboratory Technical Director

Education

M.S. (equiv.) - University of Buenos Aires, Argentina, 1978. Chemistry

- University of California, Los Angeles
  Certificate in Hazardous Materials Control and Management,
  1991 - 1993

Affiliations

American Chemical Society
American Water Works Association
National Association of Environmental Professionals
Water Environment Federation

Professional Experience

01/87 to Present	Weck Laboratories, Inc. Industry, California	President Laboratory Director
09/84 to 12/86	SCS Engineers Analytical Laboratory Long Beach, California	Laboratory Manager
07/79 to 09/84	Argentina Atomic Energy Analytical Energy Commission Chemistry Department Buenos Aires, Argentina	Chemist

Mr. Pierri has extensive experience in analytical chemistry. Most of his work in this field has been in the application and development of instrumental methods of analysis for organic analytes using GC, GC/MS, HPLC, IR and UV-Visible spectrometry. He has also worked in Atomic Absorption Spectrometry with flame and graphite furnace and Inductively Coupled Plasma (ICP) spectrometry. In the last 9 years he has been working exclusively in the environmental field obtaining in 1993 the certification as Registered Environmental Assessor (REA-04975) from the California Environmental Protection Agency.

As Laboratory Director, Mr. Pierri is responsible for all laboratory operations including the supervision of the overall performance of the laboratory, revision of analytical reports and Quality Assurance Program and provision of technical assistance and direction to laboratory personnel.

Mr. Pierri is well acquainted in all aspects of environmental regulations at Federal and State level, providing consulting services and guidance to clients in regulatory compliance and chemical treatment issues as well as understanding and interpreting analytical data.

Alfredo Pierri, continued

Other relevant experience and projects in which Mr. Pierri has participated are as follows:

- Characterization of wastes to be classified as hazardous as per State of California and Federal Regulations.
- Determination of contamination in soil and groundwater due to leaking underground storage tanks.
- Design and implementation of a Quality Assurance Program in Environmental Monitoring, writing of the QA manual and training of laboratory personnel.
- Interpretation of analytical data and compliance with regulations for drinking water for different potable water purveyors in Southern California.
- Compliance for wastewater discharges with local regulatory agencies and NPDES permits.
- Consulting services to industrial clients on pre-treatment of effluents in order to minimize organic matter and solids and reduce costs in taxes imposed by POTWs.
- Identification of unknown materials by chemical and physical methods.
- Implementation of a LIMS and use of personal computers for data acquisition, handling, and reporting.
- Teaching of Analytical Organic Chemistry at University Level for MS program.

ALAN CHING

Title:

QA Officer
Technical Director Organic Analyses

Education

B.S. - Chu Hai College, Hong Kong, 1985
Chemistry

- Shangai University of Technology, China
Analytical Chemistry Courses 1978 - 1981

M.S - California Polytechnic University, Pomona
Analytical Chemistry, 1997

Professional Experience

07/02 - Pres	Weck Laboratories, Inc.	QA Officer/Tech Director Organic
09/00 – 07/02	Weck Laboratories, Inc.	Technical Director Organic Analyses
08/97 - 09/00	Weck Laboratories, Inc.	Organic Section Group Leader
04/96 - 07/97	Weck Laboratories, Inc.	QC Officer
02/95 - 03/96	Weck Laboratories, Inc.	Senior Chemist - GC
10/90 - 02/95	Weck Laboratories, Inc.	Senior chemist AA/ICP
04/89 - 06/89	Dinippon Ink and Chemical Hong Kong	Sales & Customer Technical Service
09/86 - 03/89	DIC - Sheng Zheng Company Shengzheng, China	Production Management and Quality Control
01/85 - 08/86	Dinippon Ink and Chemical	Lab Technician

Project Experience

- Supervision and training of personnel in the organic section.
- Technical advisor for organic analysis and troubleshooting.

- Signing of organic analysis reports (in absence of Lab Manager or Lab Director).
- Reviewing and maintaining the QA manual and QA/QC documentation.

Alan Ching, Continued

- Analysis of environmental samples for metals, and other elements by atomic absorption and ICP spectrometry using flame, hydride generation, cold vapor and graphite furnace.
- Preparation and set-up of leaching tests for hazardous waste characterization.
- Maintenance of atomic absorption and ICP instrumentation.
- Development and application of microwave digestion methods for metal analysis in environmental samples.
- Analysis of water in solvents, paints, inks and petroleum products by Karl-Fisher titration.
- Separation and detection of four different arsenic compounds using ion exchange chromatography and UV detection. (Master's degree project)
    - Analysis of environmental samples by GC and GC/MS including pesticides, herbicides, hydrocarbons, volatile organics, etc.

JOE CHAU

Title

Technical Director for Inorganic and Microbiology

Education

B.S. - California Polytechnic University, Pomona, CA, 1988
Electrical Engineering

B.S - California Polytechnic University, Pomona, CA. 1993
Chemistry, Industrial Option

Professional Experience

09/00 – Pres.	Weck Laboratories, Inc. Industry, California	Technical Director for Inorganic Analysis and Microbiology
01/96 – 09/00	Weck Laboratories, Inc. Industry, California	Inorganic Section Supervisor
09/89 – 01/96.	Weck Laboratories, Inc. Industry, California	Senior chemist Spectroscopy (AA, ICP, ICP-MS)
09/88 - 09/89	Lights of America, Inc. Walnut, California	Electronic Technician

Project Experience

- Supervising and training of personnel in the wet chemistry, metals and microbiology groups.
- Technical advisor and troubleshooting for ICP-AES, ICP/MS and AA analyses.
- Signing of inorganic analysis reports (in absence of Lab Manager or Lab Director).
- Development of analytical procedures for the determination of environmental samples by ICP-MS
- ICP-MS operation and maintenance
- Analysis of water, wastewater, soil and hazardous waste samples by flame Atomic Absorption Spectrometry (AAS) and Inductively Coupled Plasma Emission Spectrometry (ICP-AES).
- Analysis of air filters for lead and other metals following NIOSH procedures.
- Operation and programming of ICP-AES spectrometer for analysis of metals.

Joe Chau, continued

- Maintenance and troubleshooting of AA and ICP instrumentation.
- Digestion methods and sample preparation for metal analysis including hot plate digestion and microwave digestion.
- Leaching procedures for hazardous waste classification TCLP, WET and EP TOX.

Special Qualifications

Seminars:

Participation of seminars about AA, ICP and sample preparation given by Thermo Jarrell Ash, Varian and Perkin-Elmer, 1990 to 1992.

Continuing Education

Certificate Program for Hazardous Waste Management, University of California, Irvine, 1991

Perkin Elmer, ICP-MS training course. San Jose, CA 1996

RICCI TIPON

Title

Technical Director GC/MS and Senior Chemist – GC/MS

Education

B.S. - University of the Philippines at Los Banos, 1986
Microbiology

Professional Experience

8/96 – Pres	Weck Laboratories, Inc. Industry, California	GC/MS senior Chemist
4/96 – 7/96	RCH Laboratories California	GC/MS Analyst
7/92 - 4/96	LVD Phils, Inc. Philippines	Chemist and Microbiologist

Project Experience

- Microbiological determinations in environmental samples
- GC/MS troubleshooting and maintenance
- Analysis of water, wastewater, soil and hazardous waste samples by GC/MS for volatile organics
- Analysis of air samples by GC/MS.

HAI-VAN NGUYEN

Title

Technical Director Microbiology and Project Manager

Education

B.S. - California Polytechnic University, Pomona, CA, 2000
Biology (minor Chemistry)

Professional Experience

9/05 – Pres	Weck Laboratories, Inc. Industry, California	Technical Director Microbiology Project Manager
9/04 – 9/05	Weck Laboratories, Inc. Industry, CA	GC/MS Analyst
9/03 - 9/04	Weck Laboratories, Inc. Industry, CA	CG Analyst
4/00 - 9/03	Weck Laboratories, Inc. Industry, CA	Microbiology Analyst Inorganic Analyst

Project Experience

- Microbiological determinations in environmental samples
- GC and GC/MS operation, troubleshooting and maintenance
- Inorganic and Wet Chemistry determinations for water, wastewater, soil and hazardous waste samples
- Ion Chromatography analysis.

Training Classes and Seminars

- Comprehensive Gas Chromatography Seminar, Restek 9/2003
- Roads to LC and GC success, Agilent Technologies, 5/2003
- The Future of Ion Chromatography, Dionex Fall 2002

APPENDIX 2

CODE OF ETHICS

Weck Laboratories, Inc. is committed to ensuring the integrity of our data and meeting the quality needs of our clients. We pledge to manage our business according to the following principals:

- To produce results that are technically sound and legally defensible;
- To assert competency only for work for which adequate equipment and personnel are available;
- To present services in a confidential, honest, and forthright manner;
- To have a clear understanding with the client as to the extent and kind of services to be rendered;
- To provide employees with guidelines and an understanding of the ethical and quality standards required in this industry;
- To operate facilities in a manner that protects the environment and the health and safety of employees and the public;
- To obey all pertinent federal, state, and local laws and regulations;
- To continually improve product and service quality;
- To treat employees equitably, acknowledge their scientific contributions, and provide them with opportunities for professional growth and development;
- To recognize and respond to community concerns; and
- To deal openly, honestly, and fairly in all business and financial matters with employees, clients and the public.

APPENDIX 3

Weck Laboratories, Inc.

Company Organization Chart
November 2005

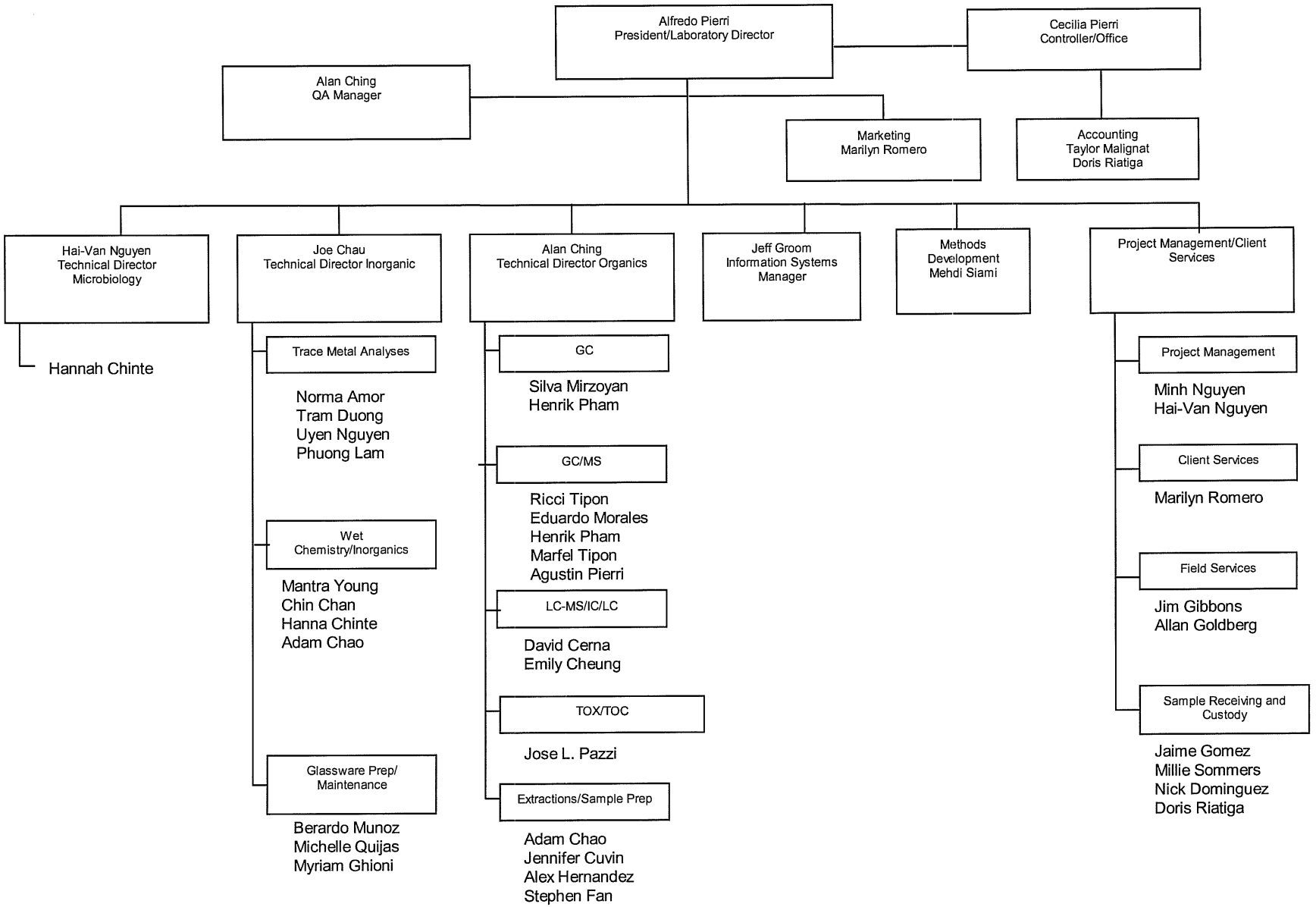

APPENDIX 4

List of Major Equipment as December 2005

Semivolatiles section

Number of Instruments	Description
1	GC/MS/MS system, Varian Saturn 4000 with EI, CI and MS/MS capabilities
1	GC/MS system, Hewlett-Packard 6890/5973N Turbo with EI and PCI capabilities
1	GC/MS system, ThermoFinnigan Trace Turbo with EI, PCI and NCI capabilities
2	Gas chromatograph Agilent model 6890 with autosampler and dual ECD detectors
1	Gas chromatographs Agilent 6890 with autosampler FID and ECD
1	Gas chromatographs Varian 3800 with autosampler and dual ECDs and TSD detectors
1	Gas chromatograph Hewlett Packard model 5890A with autosampler and ECD and NPD detector.
1	Gas chromatograph Hewlett Packard model 5890A with autosampler and FID and TCD detectors.

Volatiles section

Number of Instruments	Description
2	GC/MS system, Hewlett-Packard 6890/5973
1	GC/MS system, Hewlett-Packard 5890 series II/5972 MSD
2	GC/MS systems, Hewlett-Packard 5890/5970 MSD
1	Gas Chromatograph, Hewlett-Packard 5890A with FID/PID in series
2	Purge and Trap unit Tekmar model 3100
2	Purge and Trap units Tekmar model 3000
1	Purge and Trap unit Tekmar model 2000
2	P&T autosamplers Varian model ARCHON for water and soils
1	P&T autosampler Tekmar model Aquatek 70

Volatiles section - Continued

Number of Instruments	Description
1	P&T autosampler Tekmar model Solatek for water and soils
1	P&T autosampler Tekmar model 2016 for water and soils

IC/HPLC Section

Number of Instruments	Description
1	LC/MS/MS Varian 1200L Triple quad with positive and negative ESI, APCI and MS/MS capabilities
1	HPLC system Dionex DX-600 with gradient pump, post column derivatization, conductivity and Photodiode array detectors.
1	HPLC Systems Dionex DX500 with gradient pump, post-column reaction systems, and fluorescence and UV-VIS detectors.
1	HPLC System Dionex DX500 with gradient pump and UV-VIS detector
1	Ion chromatograph DIONEX DX-120 with isocratic pump and conductivity detector
1	Ion Chromatograph Dionex with gradient pump, post-column derivatization and UV-Vis detector dedicated for hexavalent chromium.
2	Ion Chromatograph Dionex DX-500 with gradient pump and conductivity detector dedicated to perchlorate analysis

Metals Section

Number of Instruments	Description
1	ICP-MS Spectrometer Perkin Elmer model ELAN DRC-II
1	FIAS (Flow injection) for ICP-MS hydride generation
1	ICP Spectrometer Perkin Elmer model Optima DV-3200
1	Mercury analyzer CETAC model M-6000 with autosampler

Sample preparation - extraction section

Number of Instruments	Description
1	Solid phase extraction system Horizon Technologies 4790 consisting in 6 automated extractors
3	Continuous accelerated liquid-liquid extractor/concentrator Corning from Organomation of 8 position each.
1	ASE 200 Automated Extractor for soils/sediments
1	Separatory funnel shaker 4-positions from Glas-Col
1	DryVap automated drying and evaporation station for organic extracts (ordered)
2	Block digesters for trace metal sample preparation with hood and HEPA filters

General Chemistry Section

Number of Instruments	Description
1	Lachat model 8500 + FIAS auto analyzer for NO_3-N, NO_2-N, TKN, TP, OP, Cyanide and NH_3
1	Gas flow Alpha + Beta County Protean model MPC 9604 for radiological analyses.
1	Total organic carbon (TOC) Tekmar-Dorhman Phoenix 8000 with autosampler.
1	Total organic halides (TOX) Mitsubishi TX-10.
1	UV-Visible Spectrophotometer Milton Roy Genesis 5.
1	UV-Visible Spectrophotometer Hach model DR4000U
1	Ion Selective electrode system Accumet 150 for pH, conductivity and ISE measurements
2	Scanning Infrared Spectrometers Beckman models Acculab B and 20-AX.

Information Systems

Description

Laboratory Information Management System (LIMS) "Element" from Promium running on SQL database.

Element Web program to allow clients to review projects on real time through the Laboratories' web page.

Information Systems - Continued

Description

Element Data tool program to transfer analytical data directly from instruments into the LIMS.

Agilent Chem Station software latest revision for control and data processing of Agilent GC and GC/MS instruments.

Varian Star Chromatography software for control and data processing of Varian GC and GC/MS instruments.

Dionex Peak Net Software for control and data processing of Dionex HPLC and IC instruments

Tal Technologies Wedge software for data acquisition of all RS232 devices (balances, pH meter, turbidimeter etc.) other vendor specific software for data acquisition and processing of all other instruments.

Field equipment

Number of Instruments	Description
2	Pickup trucks for field sampling Toyota Tacoma, models 1998 and 1999.
9	Composite water sampling equipment Isco, different models.

APPENDIX 5
Chain of Custody Form

Weck Laboratories, Inc.

Analytical & Environmental Services

14859 East Clark Ave. • Industry, CA 91745 • Tel 626-336-2139 • Fax 626-336-2634

CHAIN OF CUSTODY RECORD

Page_____ Of_____

CLIENT NAME: PROJECT:

ADDRESS: PHONE #: FAX #:

PROJECT MANAGER SAMPLER P.O. #

ANALYSIS REQUESTED

SPECIAL HANDLING

- ☐ Same Day Rush
- ☐ 24 Hour Rush
- ☐ 48 - 72 Hour Rush
- ☐ 7 - 10 Business Days
- ☐ QA/QC Package

Reporting Agency _____

Method of Shipment _____

ID# (For lab Use Only)	DATE SAMPLED	TIME SAMPLED	SMPL TYPE	SAMPLE IDENTIFICATION/SITE LOCATION	# OF CONT.	REMARKS

RELINQUISHED BY	DATE / TIME	RECEIVED BY	DATE / TIME	BILLING INFORMATION
RELINQUISHED BY	DATE / TIME	RECEIVED BY	DATE / TIME	
RELINQUISHED BY	DATE / TIME	RECEIVED BY	DATE / TIME	

SAMPLE CONDITION:

Temperature	
Preserved	Y / N
Evidence Seals Intact	Y / N
Container Attacked	Y / N
Preserved at Lab	Y / N

SAMPLE TYPE CODE:

AQ = Aqueous
NA = Non Aqueous
SL = Sludge
DW = Drinking Water
WW=Waste Water
GW = Ground Water
SO = Soil
SW = Solid Waste
OL = Oil
OT = Other Matrix

RUSH TURN AROUND TIME MAY REQUIRE SURCHARGE
TERMS AND CONDITIONS: SEE BACK OF THIS FORM

SPECIAL REQUIREMENTS

DISTRIBUTION: WHITE & CANARY - For Laboratory PINK - For Client

APPENDIX 6

Sample Collection and Holding Times

Test Name	Matrix	Bottle Type	Bottle size	Preservative: Unchlorinated Water (Raw)	Preservative: Chlorinated Water (Treated)	Preservative: Soil/Solid	Holding Time until start of analyis	Analtical Technique	Analytical Method
1,2,3-TCP	Water	Glass	2 x 40 ml	None	Ascorbic		14 days	GC/MS	EPA 524.2SIM
1,4-Dioxane	Water	Amber Glass	2 x 1 L	None	None		14 days	GC/MS	EPA 8270M
Aldehydes	Water	Glass	2 x 40 ml	CuSO4	NH4Cl/CuSO4		7 Days	GC/ECD	EPA 556
Aldehydes	Water	Glass	1 L	None	Thiosulfate		3 days	HPLC-UV	EPA 8315
Aldehydes(1)	Soil/Solid	Glass	4 oz			None	3 days	HPLC-UV	EPA 8315
Alkalinity, Total	Water	Poly	250 ml		None		14 Days	Titration	SM2320B
Anions by IC (F-,Cl-,SO4=)	Water	Poly	250 ml	None	None		28 days	IC	EPA 300.0
Anions by IC (NO2-,NO3-,PO4≡)	Water	Poly	250 ml	None	None		48 hours	IC	EPA 300.0
Arsenic speciation	Water	Poly	250 ml	EDTA/acetic acid	EDTA/acetic acid		14 Days	Resin-ICP/MS	EPA 200.8
Asbestos	Water	Poly	1 L	None	None		48 Hours	TEM	EPA 100.1/.2-Sub
Bacteria-Coliform - solid/sludge/soil	Soil/solid	Glass-Sterile	4 oz			None	N/A	MTF	SM 9221B
Bacteria-Coliform - Wastewater	Water	Poly-Sterile	125 ml	Thiosulfate	Thiosulfate		6 hours	MTF	SM 9221B
Bacteria-Coliform - Drinking Water	Water	Poly-Sterile	125 ml	Thiosulfate	Thiosulfate		24 Hours	Colilert P/A or enumeration	SM 9223B
Bacteria-Enterococcus - Wastewater	Water	Poly-Sterile	125 ml	Thiosulfate	Thiosulfate		24 Hours	Enumeration Quantitray	Enterolert
Bacteria-Heterotrophic Plate Count	Water	Poly-Sterile	125 ml	Thiosulfate	Thiosulfate		24 Hours	Pour Plate Method	SM 9215B
BOD	Water	Poly	1 L	None	None		48 Hours	DO Probe	SM 5210B
BOD, Carbonaceous	Water	Poly	1 L	None	None		48 Hours	DO Probe	SM 5210
Bromate	Water	Poly	250 ml	EDA	EDA		28 Days	IC	EPA 300.1
Bromate- Low Level	Water	Poly	250 ml	EDA	EDA		28 Days	IC	EPA 326
Bromide	Water	Poly	250 ml	None	None		28 Days	IC	EPA 300.0
Bromide-Low Level	Water	Poly	250 ml	None	None		28 Days	IC	EPA 300.1
Carbamates	Water	Glass	1 x 40 ml	MCAA	MCAA/thiosulfate		28 Days	HPLC	EPA 531.1
COD	Water	Poly	250 ml	H2SO4	H2SO4		28 Days	Colorimetric	EPA 410.4
Chloral Hydrate	Water	Glass	2 x 60 ml	Sulfite/buffer	Sulfite/buffer		14 days	GC/ECD	EPA 551.1
Chlorate	Water	Poly	250 ml	EDA	EDA		28 Days	IC	EPA 300.1
Chloride	Water	Poly	250 ml	None	None		28 Days	IC	EPA 300.0

Test Name	Matrix	Bottle Type	Bottle size	Unchlorinated Water (Raw)	Chlorinated Water (Treated)	Soil/Solid	Holding Time until start of analyis	Analtical Technique	Analytical Method
Chlorine Dioxide	Water	Glass	250 ml	None	None		24 Hours	Colorimetric	SM 4500CLO2D
Chlorine Residual	Water	Glass	250 ml	None	None		24 Hours	Colorimetric	SM 4500CL-G
Chlorite	Water	Amber Glass	125 ml	EDA	EDA		14 Days	IC	EPA 300.1
Chlorophyll-a	Water	Amber Poly	2 x 1L	None			48 Hours	Spectrophotometric	SM 10200H
Chromium, Hexavalent	Water	Poly	250 ml	None	None		24 Hours	Spectrophotometric	SM3500CR-D/7196
Chromium, Hexavalent	Soil/soild	Glass	4 oz	None	None		30 days	Spectrophotometric	EPA 3060/7196
Chromium, Hexavalent (low level)	Water	Poly	250 ml	None	None		24 Hours	IC	EPA 218.6
Chromium, Hexavalent (low level)	Soil/soild	Glass	4 oz	None	None		30 days	IC	EPA 3060/7199
Color	Water	Glass	500 ml	None	None		48 Hours	Visual	SM2120B
Conductivity (Specific Conductance)	Water	Poly	250 ml	None	None		28 Days	Electrometric	SM2510B
Cyanide	Water	Poly	500 ml	NaOH	NaOH/ascorbic		14 Days	FIA-Colorimetric	EPA 335.2/335.4
Dioxin	Water	Glass	2 x 1 L	None	None		1 year	GC/ MS	EPA 1613-Sub
Diquat/Paraquat	Water	Amber poly	500 ml	None	None		7 Days	HPLC	EPA 549.2
Disinfection by-products	Water	Glass	2 x 60 ml	Sulfite/buffer	Sulfite/buffer		14 days	GC/ECD	EPA 551.1
Diuron	Water	Amber Glass	1 L	None	None		7 days	HPLC/UV	EPA 632
Diuron-UCMR	Water	Amber Glass	1 L	CuSO4/Trizma	CuSO4/Trizma		14 days	HPLC/UV	EPA 532
EDB and DBCP	Water	Glass	2 x 40ml	None	Thiosulfate		14 Days	GC/ECD	EPA 504.1
Endothall	Water	Amber Glass	250 ml	None	None		7 days	GCMS	EPA 548.1
Fluoride	Water	Poly	250 ml	None	None		28 Days	IC	EPA 300.0
General Minerals (excluding metals)	Water	Poly	1 L	None	None		Various	Wet Chem methods	various
General Minerals (metals only)	Water	Poly	500 ml	HNO3	HNO3		6 Months	ICP-AES	EPA 200.7
General Physical (Color, Odor, Turbidity	Water	Glass	500 ml	None	None		24 Hours	Wet Chem methods	various
Glyphosate	Water	Glass	40 ml	None	Thiosulfate		14 Days	HPLC	EPA 547
HAAs	Water	Amber Glass	2 x 40 ml	NH4Cl	NH4Cl		14 days	GC/ECD	EPA 552.2

Test Name	Matrix	Bottle Type	Bottle size	Preservative: Unchlorinated Water (Raw)	Preservative: Chlorinated Water (Treated)	Preservative: Soil/Solid	Holding Time until start of analyis	Analtical Technique	Analytical Method
HAAs-Formation Potential	Water	Amber Glass	1 L	None	None		14 days	GC/ECD	SM 5710B/EPA 552.2
Herbicides-DW	Water	Amber Glass	250 ml	None	Thiosulfate		14 days	GC/ECD	EPA 515.3
Herbicides-GW	Water	Amber Glass	2 x 1 L	None	Thiosulfate		7 Days	GC/ECD	EPA 8151
Mercury	Water	Glass jar	250 ml	HNO3	HNO3		28 Days	Cold Vapor AAS	EPA 245.1/7470
Mercury in soil/solid/sludge	Soil/Solid	Glass jar	4 oz.	None	None		28 Days	Cold Vapor AAS	SW 7471
Metals (2)	Water	Poly	250 ml	HNO3	HNO3		6 Months	ICP/MS or ICP-AES	EPA 200.8/200.7
NDMA	Water	Amber Glass	2 x 1 L	None	Thiosulfate		7 days	GC/MS/CI SIM	EPA1625M
Nitrate	Water	Poly	250 ml	None	None		48 Hours	IC or FIA	EPA 300.0/353.2
Nitrite	Water	Poly	250 ml	None	None		48 Hours	IC or FIA	EPA 300.0/353.2
Nitrite+Nitrate as N	Water	Poly	250 ml	H2SO4	H2SO4		28 Days	FIA-Colorimetric	EPA353.2
Nitrogen, Total Kjeldahl (TKN)	Water	Poly	250 ml	H2SO4	H2SO4		28 Days	FIA-Colorimetric	EPA 351.2
Nitrogen-Ammonia	Water	Poly	250 ml	H2SO4	H2SO4		28 Days	FIA-Colorimetric	EPA 350.1
Nitrogen-Ammonia in ww with distillation	Water	Poly	250 ml	H2SO4	H2SO4		28 Days	FIA-Colorimetric	EPA 350.1
Nitrosamines	Water	Amber Glass	2 x 1 L	None	Thiosulfate		14 days	GC/MS/CI SIM	EPA 521
Odor	Water	Glass	500 ml	None	None		24 Hours	Odor	SM 2150B
Oil and Grease	Water	Glass	1 L	HCL	HCL		28 Days	Gravimetric	EPA1664
Organotins(tributyltin)	Water	Glass	1 L	HCL	HCL		7 Days	GC/MS	GC/MS
Oxygen, Dissolved	Water	Glass	BOD bottle	None	None		24 Hours	O2 Probe	SM 4500-OG
Perchlorate	Water	Poly	250 ml	None	None		28 Days	IC	EPA 314
Perchlorate - Low Level by LC/MS/MS	Water	Poly Sterile	125 ml	Sterile field filtration	Sterile field filtration		28 Days	LC/MS/MS	EPA 331/332
Perchlorate in soils	Soil	Glass jar	4 oz	None	None		28 Days	IC	EPA 314M
Pesticides-Organophosphorus	Water	Amber Glass	2 x 1L	None	Thiosulfate		7 Days	GC/NPD	EPA8141
Pesticides, Chlorinated (DW)	Water	Amber Glass	2 x 1L	None	Thiosulfate		7 days	GC/ECD	EPA 508
Pesticides, Chlorinated (WW)	Water	Amber Glass	2 x1L	None	Thiosulfate		7 Days	GC/ECD	EPA 608
Pesticides, N/P -DW	Water	Amber Glass	2 x 1L	None	Thiosulfate		14 days	GC/ NPD	EPA 507

Test Name	Matrix	Bottle Type	Bottle size	Preservative			Holding Time until start of analyis	Analtical Technique	Analytical Method
				Unchlorinated Water (Raw)	Chlorinated Water (Treated)	Soil/Solid			
pH	Water	Poly	250 ml	None	None		3 Days	Electrometric	SM4500H
Phenolics	Water	Amber Glass	1L	H2SO4	H2SO4		28 Days	Spectrophotometric	EPA 420.1
Phosphate, Ortho	Water	Poly	250 ml	H2SO4	H2SO4		48 Hours	FIA-Colorimetric	EPA 365.1
Phosphate, Total	Water	Poly	250 ml	H2SO4	H2SO4		28 Days	FIA-Colorimetric	EPA 365.1
Radiological-Gross Alpha	Water	Poly	1 L	HNO3	HNO3		6 Months	GPC	EPA 900.0
Radiological-Gross Alpha high TDS	Water	Poly	1 L	HNO3	HNO3		6 Months	Coprecipitation-GPC	SM7110C
Radiological-Gross Beta	Water	Poly	1 L	HNO3	HNO3		6 Months	GPC	EPA 900.0
Radiological-Radium 226	Water	Poly	1 L	HNO3	HNO3		6 Months		EPA 903.1 Sub
Radiological-Radium 228	Water	A-Poly	1 L	HNO3	HNO3		6 Months		RA-05 Sub
Radiological-Radon 222	Water	Glass	2 x 60 ml	None	None		4 Days	LSC	EPA 913.0
Radiological-Strontium 90	Water	Poly	1 L	HNO3	HNO3		6 Months		EPA 905.0 sub
Radiological-Tritium	Water	Poly	1 L	None	None		6 Months	LSC	EPA 906.0 sub
Radiological-Uranium	Water	Poly	250 ml	HNO3	HNO3		6 Months	ICP-MS	EPA 200.8
Semivolatile Organics (BNA) - WW	Water	Amber Glass	2 x 1L	None	Thiosulfate		7 Days	GC/MS	EPA 625
Silica by ICP	Water	Poly	250 ml	None	None		28 Days	ICP	EPA 200.7
SOCs - Drinking Water	Water	Amber Glass	2 x 1 L	HCL	Sulfite/HCl		14 days	GC/MS	EPA 525.2
SOCs - Phenolics	Water	Amber Glass	2 x 1 L	HCL	Sulfite/HCl		14 days	GCMS	EPA 528
Solids, Settleable	Water	Poly	1 L	None	None		48 Hours	Gravimetric	EPA 160.5
Solids, TDS	Water	Poly	500 ml	None	None		7 Days	Gravimetric	SM2540C
Solids, Total	Water	Poly	500 ml	None	None		7 Days	Gravimetric	SM2540B
Solids, TSS	Water	Poly	500 ml	None	None		7 Days	Gravimetric	EPA 160.2
Solids, TVS	Water	Poly	500 ml	None	None		7 Days	Gravimetric	EPA 160.4
Solids, VSS	Water	Poly	500 ml	None	None		7 Days	Gravimetric	SM 2540E
Sulfate	Water	Poly	250 ml	None	None		28 Days	IC	EPA 300.0
Sulfide, Dissolved	Water	Poly	250 ml	NAOH	NAOH		24 hours	Colorimetric	SM4500S2D
Surfactants (MBAS)	Water	Poly	500 ml	None	None		48 Hours	Colorimetric	SM5540C
t-Butyl Alcohol	Water	Glass	2 x 40 ml	none	None		14 Days	GC/MS	EPA 524.2

Test Name	Matrix	Bottle Type	Bottle size	Preservative			Holding Time until start of analyis	Analtical Technique	Analytical Method
				Unchlorinated Water (Raw)	Chlorinated Water (Treated)	Soil/Solid			
THMs	Water	Amber Glass	2 x 40 ml	Thiosulfate	Thiosulfate		14 Days	GC/MS	EPA 524.2
THMs-Formation Potential	Water	Amber Glass	250 ml	None	None		14 Days	GC/MS	SM5710/EPA 524.2
Total Organic Carbon	Water	Amber Glass	250 ml	H2SO4	H2SO4		28 Days	UV-Persulfate	SM5310C
Total Organic Halide	Water	Amber Glass	250 ml	H2SO4	Sulfite/H2SO4		14 Days	Pyrolysis/Coulometric	SM5320B/EPA 9020
Turbidity	Water	Poly	250 ml	None	None		48 Hours	Nephelometric	EPA 180.1
UV254	Water	Amber Glass	250 ml	None	None		2 Days	Spectrophotometric	SM 5910B
Voaltile Organics-DW	Water	Glass	3 x 40 ml	HCL	Ascorbic/HCL		14 Days	GC/MS	EPA 524.2
Volatile Organics-Aromatics only	Water	Glass	2 x 40 ml	HCL	Thiosulfate/HCl		14 Days	P&T/PID	EPA 602
Volatile Organics-WW	Water	Glass	2 x 40 ml	HCL	Thiosulfate/HCl		14 Days	GC/MS	EPA 624

Notes:
(1): Formaldehyde and acetaldehyde only
(2): Al,Sb,As,Ba,Be,B,Cd,Ca,Na,Mg,K,Cr,Co,Cu,Fe,Pb,Li,Mn,Mo,Ni,Se,Ag,Sr,Tl,Ti,V,Zn

APPENDIX 7

List of SOPs as December 2005

SOP's LIST AND INDEX
Administration - Miscellaneous and administrative SOPs

File Name	Rev No	Rev Date	Method	Title
MIS001	11	Aug-04	General	Sample receiving, log in storage and disposal
MIS002	4	Jun-04	Sampling	Industrial wastewater sampling instructions
MIS003	3	Jul-05	General	Back up System
MIS004	3	May-04	General	Chemicals receipt and storage and preparation of solutions
MIS005	2	Apr-00	General	Start and Shut down the Server
MIS006	1	Jul-96	General	Disposal of material used of microbiological determinations
MIS007	1	Jan-97	General	Sample container management
MIS008	1	Jan-97	General	Laboratory hazardous waste management
MIS009	2	Jan-98	General	Soil samples from Hawaii and Counties other than the United States
MIS010	1	Mar-99	Sampling	Sampling Instructions for protected groundwater supplies and water supplies with treatment
MIS011	3	Aug-00	General	Preparation, Approval, Distribution, & Revision of standard Operatin Procedures
MIS012	1	Dec-99	General	Significant Figures and Rounding
MIS013	1	Dec-99	General	Generation and Utilization of Control Charts
MIS014	3	Sep-00	General	Performing Internal Audit
MIS015	2	Mar-00	General	Testing of Proficiency Test (PT) Samples
MIS016	2	Aug-00	General	Corrective Action Procedures
MIS017	2	Dec-03	General	Logbook Maintenance, Utilization, and Review
MIS018	2	Aug-00	General	Internal Laboratory Data Review
MIS019	2	Oct-03	General	Resolution of Complaints
MIS020	2	Apr-04	General	Analytical Balance Calibration & Check
MIS021	2	Aug-00	General	Calibration & Maintenance of Mechanical Pipettes
MIS022	2	Oct-03	General	Lims Security Systems
MIS023	2	Oct-03	General	Login a sample into the LIMS
MIS024	1	Apr-00	General	DI water Quality checks
MIS025	1	Apr-00	General	Manual Data Entry into the LIMS
MIS026	1	Apr-00	General	Taking reprresentative samples and sub-samples in the Laboratory.
MIS027	3	Jul-05	General	Electronic Data Transfer of Analytical Results
MIS028	3	May-04	General	Standard Cleaning Protocols for containers and labware
MIS029	2	Apr-04	General	Calibration and Verification of Thermometers
MIS030	3	Dec-04	General	Managerial Reviews
MIS031	3	May-04	General	Calibration and Verification of Lab Support Equipment
MIS032	1	Apr-00	General	Calculation of MDL and RLs
MIS033	1	Apr-00	General	Rejection/acceptance criteria for special analyses
MIS034	2	Aug-00	General	Performing IDCs
MIS035	2	Oct-03	General	Hiring a new employee
MIS036	1	Aug-00	General	Use of areas of incompatible activities
MIS037	2	Dec-03	General	Computers and electronic data requirements
MIS038	1	Aug-00	General	Chain of Custody Procedures for Legal and Evidentiary custody of samples
MIS039	1	May-02	General	Proper Raw Data Handling and Manual Integration Procedures

File Name	Rev No	Rev Date	Method	Title
MIS040	2	Oct-03	General	Company Data Backup and Archive Routine
MIS041	1	Oct-03	General	Subcontract samples
MIS042	2	Dec-04	General	Outside Support Services and Supplies
MIS043	1	Jul-02	General	Implementation of the Business Ethics and Data Integrity Policy
MIS044	1	Dec-04	General	Control of Nonconforming Environmental Testing
MIS045	1	Dec-04	General	Control of Records
MIS046	1	Dec-04	General	Training of Laboratory Personnel
MIS047	2	Nov-05	General	Estimating the Uncertainty of Measurements

Inorganic Department - Metals SOPs

File Name	Rev No	Rev Date	Method	Title
MET001	5	Apr-00	1311	Toxicity Characteristic Leaching Procedure (TCLP)
MET002	1	Jun-92	Pb&Cu	Analysis of Lead & Copper for drinking water (lead & copper rule)
MET003	1	Jan-94	N6009	Analysis of Mercury in solid sorbent by cold vapor technique (NIOSH 6009)
MET004	1	Nov-92	N7082	Analysis of Total Lead in air filter by NIOSH 7082
MET005	5	Nov-02	3010	Acid digestion of Aqueous samples & extracts for Total Metals for analysis by FLAA or ICP Spectroscopy EPA 3010 modified
MET006	4	Aug-96	200.9	Graphite Furnace Atomic Absorption - EPA method 20
MET007	4	Mar-02	3050	Acid digestion of sediments, sludges & soils (EPA 305 B)
MET008	2	Apr-00	7000	Flame Atomic Absorption Spectrometry - EPA 7000
MET009	2	Mar-02	3050M	Acid digestion of sediments, sludges, soils & wipes (EP 3050 M)
MET010	6	Feb-02	7471	Analysis of Hg in sediment by manual cold vapor technique, EPA 7471A
MET011	4	Feb-02	245.1	Analysis of Hg in water by manual cold vapor techniqu EPA method 245.1
MET012	2	Apr-00	7741	Selenium (Atomic Absorption, Gaseous Hydride) EPA 7741/270.3
MET013	1	Jan-94	7061	Arsenic (Atomic Absorption, Gaseous Hydride) EPA 7061/ 206.3
MET014	2	Mar-94	N7000	Analysis of total metals in air filters by flame atomic absorption using microwave digestion (NIOSH 7000M)
MET015	1	May-94	Pb in air	Determination of Lead in suspended Particulate matter collected from ambient air (Title 40 CFR part 50, appendix G) Rule 1420
MET016	1	May-94	N7300	Analysis of total metals in air filters by Inductively coup plasma atomic emission spectrometry (ICP) using microwave digestion (NIOSH 7300M)
MET017	7	Mar-02	6010	Inductively coupled plasma atomic emission spectroscopy EPA method 6010B
MET018	7	Mar-04	200.8	EPA method 200.8 Analysis of trace metal in water in ICP/MS (ELAN 6000)

File Name	Rev No	Rev Date	Method	Title
MET019	5	Feb-02	6020	Metal Analysis by ICP/MS - EPA method 6020
MET020	3	Sep-01	200.2	Sample preparation procedure for spectrochemical determination of total recoverable elements :EPA meth 200.2
MET021	2	Apr-00	WET	Waste Extraction test procedures. Title 22 part 66261.1 appendix II
MET023	2	Feb-03	As-ICP/MS	Arsenic sample preparation by flow Injection vapor generation - ICP-MS
MET024	2	Feb-03	Se-ICP/MS	Selenium sample preparation by flow Injection vapor generation for ICP-MS
MET025	4	May-01	200.7	Inductively coupled plasma atomic emission spectroscopy EPA method 200.7
MET026	1	Apr-00	231.1	Analysis of Gold by Flame Atomic Absorption Spectrometry EPA 231.1
MET027	1	Apr-00	239.1	Analysis of Lead by Flame Atomic Absorption Spectrometry EPA 239.1
MET028	1	Apr-00	253.1	Analysis of Lead by Palladium by Flame Atomic Absorption Spectrometry EPA 253.1
MET029	1	Apr-00	265.1	Analysis of Rhodium by Flame Atomic Absorption Spectrometry EPA 265.1
MET030	1	Apr-00	255.1	Analysis of Platinum by Flame Atomic Absorption Spectrometry EPA 255.1
MET031	2	Feb-02	7470	Analysis of Mercury in liquid waste by Cold Vapor Aton Absorption Spectrometry EPA 7470A
MET032	1	Jul-00	Maint	Maintenance of analytical instruments used for trace metal analysis
MET033	1	Nov-04	3005	Acid Digestion of Waters for Total Rtecoverable or Dissolved Metals for Analysis by ICP Spectoscopy and ICP-MS-EPA 3005A Modified

Inorganic Department - Microbiology SOPs

File Name	Rev. No	Rev Date	Method	Title
MIC003	6	Jul-04	SM9223	Bacteriological Analysis of Drinking Water Samples - SM9223
MIC004	5	Jun-04	SM9215B/SimPlate	Heterotrophic Plate Count: Pour Plate Method SM 9215B and SimPlate
MIC005	6	Jul-04	SM9221	Total and Fecal Coliform Analysis of Drinking Water and Waste Water by Multiple Tube Fermentation Technique SM 9221
MIC006	4	Jul-04	QAQC	Quality Assurance for Microbiological Tests
MIC007	1	May-00		Using New Methods or Test Kits for Microbiological Determinatio
MIC008	2	May-04		Verification of Support Equipment Used for Microbiological Determinations
MIC009	1	5-Jul	Enterolert	Bacteriological Analysis of Ambient Water Samples for Enterococ by Enterolert Presence/Absence and Quanti-Tray® Method

Radio Chemistry Department - RadChem SOPs

File Name	Rev. No	Rev Date	Method	Title
RAD001	1	May-05	900.0	Determination of Gross Alpha and Gross Beta Radioactivity in Drinking Water, EPA Method 900.0
RAD002	1	Jul-05	SM7110C	Determination of Gross Alpha Radioactivity in Water by Coprecipitation, SM 7110C
RAD003	1	Jul-05	903.0	Determination of Alpha-emitting Radium Isotopes in Water, EPA Method 903.0
RAD004	1	Oct-05	All	Quality Control for Radiochemical analysis

Inorganic Department - Wet Chemistry SOPs

File Name	Rev No	Rev Date	Method	Title
WET001	8	Jun-03	300	Analysis of anions by EPA 300.0 (MOVED from ORG001)
WET002	1	Sep-02	9056	Analysis of anions by EPA 9056 (MOVED from ORG051)
WET003	9	Apr-02	SM4500CN	Analysis of Total Cyanide in Water Samples SM4500 CN
WET004	6	Oct-01	SM5210B	5 Day Biological Oxygen Demand (BOD) Test by SM 5210B
WET005	1	Jun-92	ASTM D240	Heat of combustion
WET006	2	Jan-98	418.1	Analysis of Total Recoverable Petroleum Hydrocarbons in Soil - EPA 418.1M
WET007	1	Sep-02	5050	Bomb preparation method for solid waste EPA 5050(moved from ORG052)
WET008	2	Jun-98	SM5540D	Non-ionic Surfactants as CTAS(Cobalt Thiocyanate Active Substances) SM method 5540 D
WET009	5	Oct-02	110.2	Analysis of Color in Water by EPA Method 110.2
WET010	1	Jul-92	SM4500CNM	Analysis of Thiocyanate in Wastewater by Method SM4500-CN M
WET011	1	Jul-92	SM4500CNL	Analysis of Cyanate in Wastewater by Method SM4500-CN L
WET012	1	Sep-92	ASTMD19	Colorimetric Analysis of Formaldehyde in water by ASTM D-19
WET013	2	Aug-98	141.1	Analysis of Odor in Drinking Water by EPA method 140.1/SM 2150
WET014	1	Sep-92	SM2160B	Analysis of Taste by Standard methods 2160B,Flavor Threshold Test,FTT
WET015	1	Sep-92		Analysis of Water content by Karl Fisher Titration ASTM method E203
WET016	4	Feb-99	413.1	Oil and Grease in water EPA 413.1
WET017	1	Sep-92	SM5520 F	Non polar O&G
WET018	2	Apr-	SM4500CN	Cyanide Amenable to Chlorination in water ,SM 4500 CN-G

		00	G	
WET019	3	Apr-00	420.1	Analysis of Total Recoverable Phenolics in Water - EPA 420.1
WET020	2	Apr-00	370.1	Silica, Dissolved (EPA 370.1, Colorimetric)
WET021	6	Feb-02	1010	Pensky Marten closed cup method for determining Ignitability EPA 1010
WET022	3	Apr-00	SM2320B	Alkalinity as CaCO3 - Titrimetric method SM2320 B
WET023	3	Apr-00	ASTM D512	Chloride (Titrimetric, Silver Nitrate) ASTM D-512-89 B
WET024	4	Apr-00	SM2310B	Acidity as CaCO3 - SM 2310 B
WET025	2	Sep-99	AB titration	Acid Content (Titration)
WET026	2	Jul-94	SM4500F BC	Floride,Potentiometric,Ion selective Electrode(Direct & Following Distillation) SM 4500-F B/C
WET027	2	Apr-00	3060	Alkaline Digestion for Cr VI (EPA 3060)
WET028	4	Aug-00	SM4500 H B	pH (Electrometric), SM 4500-H+ B
WET029	3	Jul-00	SM3500 Cr D	Chromium, Hexavalent (Colorimetric) EPA SM 3500-Cr D
WET030	2	Apr-00	SW846	Determination of Total Releasable Cyanide (SW-846 chapter seven,step 7.3.3.2
WET031	1	Jun-94	SM4500S2 E	Dissolved Sulfide - Iodometric method (SM 4500 -S -2 E)
WET032	3	Oct-01	SM4500 S2 D	Dissolved Sulfide - Methylene Blue method (SM 4500-S-2 D)
WET033	3	Jul-00	9030/9034	Acid-Soluble & Acid-Insoluble Sulfides (EPA 9030A)
WET034	2	Apr-00	SW846	Determination of Total Releasable Sulfide (Sw 846,Chapter seven,step 7.3.4.2)
WET035	4	Oct-01	SM4500NH3 E	Ammonia-Nitrogen (NH3 -N) Titrimetric method following distillation, SM4500NH3 E
WET036	7	Oct-01	SM4500NH3 F	Ammonia - Nitrogen (NH3-N) Ammonia-Selective Electrode method, SM4500NH3 F
WET038	3	Feb-02	SM4500Cl G	Chorine,Total Residual (spectrophotometric, DPD) SM 4500 - Cl G
WET039	5	Nov-02	SM2510B	Conductance (specific conductance) - SM 2510 B
WET040	2	Apr-00	SM2340C	Hardness,total, as CaCO3 (Titrimetric, EDTA) - SM 2340 C
WET041	6	Oct-01	SM2540C	Residue,Filterable - TDS (Gravimetric,Dried at 180°C) - SM 2540 C
WET042	5	Oct-01	160.2	Residue, non-filterable TSS (Gravimetric, dried at 103-105°C) EPA Method 160.2
WET043	3	Apr-00	SM5540C	Methylene Blue Active Substances (MBAS) -colorimetric SM5540C
WET044	1	Aug-94	253B	Thiosulfate and Sulfite (Iodometric,Aldehyde Adduct),(LACSD procedure 253B)

File Name	Rev No	Rev Date	Method	Title
WET045	6	Feb-02	SM4500NH3 E	Nitrogen, Kjeldahl, Total (Titrimetric), SM4500 NH3 E
WET046	2	Apr-00	SM2540B	Residue, total (Gravimetric , Dried at 103-105°C) SM 2540B
WET047	3	Jul-00	160.4	Residue, Volatile (Gravimetric, Ignition at 550°C) EPA 160.4
WET048	2	Apr-00	160.5	Residue,Settleable (volumetric,Imhoff cone), EPA 160.5
WET049	1	Sep-94	B512	Residue(Modified ANSI/AWWA B512-91),Gravimetric, evaporated at 22°C
WET050	4	Jul-00	410.4	Chemical Oxygen Demand (Cod)test by EPA 410.4
WET053	2	Apr-00	SM4500CN F	Analysis of Total Cyanide in Water Samples by selective electrode method (SM 4500-CN F)
WET054	1	Jan-98	418.1AZ	EPA 418.1 Arizona
WET055	5	Feb-03	1664	HEM;Oil & Grease and SGT-HEM by Extyraction and Gravimetry, EPA 1664 Rev A
WET056	4	Sep-00	180.1	Determination of Turbidity by Nephelometric Method EPA 180.1
WET057	2	Apr-00	SM4500P D	Total Phosphorus by SM4500 PD
WET058	1	Nov-98	SM2550B	Temperature measurements by SM 2550 B
WET059	2	Jun-99	FMC	Hydrogen Peroxide Analysis - Method FMC
WET062	2	Oct-02	420.1M	Total Recoverable phenols in soil and oil EPA 420.1Modified
WET063	1	Oct-99	418.1	Total Recoverable Petroleum hydrocarbons in water EPA 418.1
WET064	2	Apr-00	9045C	pH (Electrometric), EPA Method 9045C (soil and solid)
WET065	2	Apr-00	9040B	pH (Electrometric), EPA Method 9040B (multiphase wastes)
WET066	1	Nov-99	SM5560C	Analysis of Volatile Acids - SM 5560C
WET068	1	Apr-00	SM2330B	Corrosivity langlier Index SM 2330 B
WET069	1	Apr-00	SM2340B	Hardness as CaCO3 by Calculation SM 2340 B
WET070	2	Jul-00	SM4500ClO2 D	Chlorine Dioxide (DPD Method) SM 4500-ClO2 D
WET071	1	Apr-00	SM4500Norg B	Nitrogen, Kjeldahl, Total (Potentiometric), SM 4500 Norg B and SM4500NH3 F
WET072	2	Feb-02	SM4500 O G	Dissolved Oxygen Membrane Electrode Method SM 4500-O G
WET073	2	Feb-02	SM4500SO3 B	Sulfite, Iodometric SM4500SO3= B

File Name	Rev No	Rev Date	Method	Title
WET074	1	Apr-00	9010/9014	Distillation and analysis for total and amenable cyanide EPA 9010B/9014
WET075	1	Apr-00	CCR ch10	Ignitability as per CCR Chapter 10, Article 3
WET076	1	Apr-00	CCR ch10	Reactivity of a waste as per CCR Chapter 10, Article 3
WET077	1	Apr-00	CCR ch10	Corrosivity of a waste as per CCR Chapter 10, Article 3
WET078	1	Apr-00	SM5910	UV Absorbing Constituents UV-254 SM 5910
WET079	1	Apr-00	7196	Hexavalent Chromium, Spectrophotometric EPA 7196A
WET080	2	Dec-02	365.3	Total Phosphorus Analysis - EPA 365.3
WET081	1	May-00	ASTM2382	Heat of combustion ASTM2382
WET082	1	May-00	ASTM E203	Water by Karl Fischer ASTM E-203-75
WET083	1	Feb-04	326	Analysis of low level of bromate in drinking water by IC with PCR, EPA 326
WET084	1	Mar-05	353.2	Analysis of Nitrate and Nitrite in Drinking Water and Wastewater by Flow Injection and Colorimetry Using Lachat Quickchem 8500 FIA+ Analyzer, EPA Method 353.2
WET085				Not in use
WET086	1	Apr-05	350.1	Analysis of Ammonia in Drinking Water and Wastewater by Flow Injection and Colorimetry Using Lachat Quickchem 8500 FIA+ Analyzer, EPA Method 350.1
WET087	1	Apr-05	365.1	Analysis of Total Phosphorus (Acid Persulfate Digestion Method) in Drinking Water and Wastewater by Flow Injection and Colorimetry Using Lachat Quickchem 8500 FIA+ Analyzer, EPA Method 365.1
WET088	1	Apr-05	365.1	Analysis of Orthophosphate in Drinking Water and Wastewater by Flow Injection and Colorimetry Using Lachat Quickchem 8500 FIA+ Analyzer, EPA Method 365.1
WET089	1	Jun-05	351.2	Analysis of Total Kjeldahl Nitrogen in Drinking Water and Wastewater by Flow Injection and Colorimetry Using Lachat Quickchem 8500 FIA+ Analyzer, EPA Method 351.2
WET090	1	Jun-05	335.1	Analysis of Cyanide Amenable to Chlorination, EPA 335.1
WET091	1	Jun-05	335.4	Analysis of Total Cyanide in Drinking Water and Wastewater by Flow Injection and Colorimetry Using Lachat Quickchem 8500 FIA+ Analyzer, EPA Method 335.4
WET092	1	Jun-05	335.2	Analysis of Total Cyanide in Drinking Water and Wastewater by Flow Injection and Colorimetry Using Lachat Quickchem 8500 FIA+ Analyzer, EPA Method 335.2
WET093	1	Jul-05	SM10200H	Analysis of Chlorophyll-a and Pheophytin-a , SM10200-H
WET094	1	Sep-05	SM5710B	Determination of Trihalomethane Formation Potential (THMFP) by SM5710B

Organic Department - Organics SOPs

File Name	Rev. No	Rev Date	Method	Title
ORG002	2	Dec-01	SM5710B	Determination of the Maximum Total Trihalomethane Potential.
ORG003	6	Oct-02	SM5310C	Total Organic Carbon (TOC) and Dissolved Organic Carbon DOC by SM5310C
ORG004	9	Mar-02	SM5320B	Determination of Total Organic Halides in water by Adsorption-Pyrolysis-Titrimetric Method , SM-5320B
ORG005	6	Nov-00	8315	Determination of Ketones and aldehydes by HPLC - EPA method 8315
ORG006	5	Mar-01	8318	N-Methylcarbamates by HPLC - EPA method 8318
ORG007	1	Sep-92	9076	Determination of Total Halogens and Total Extractable Organic Halides - EPA 9076
ORG008	4	Sep-01	551.1	Analysis of Chlorination Disinfection Byproducts (DBPs) in Drinking water by Liquid-Liquid Extraction and GC/ECD- EPA 551.1
ORG009	10	Apr-01	8260	Determination of Volatil Organic Compounds in Groudwater and Soil by GC/MS, without cryogenic cooling- EPA 8260B
ORG011	4	Apr-01	8330	Explosive residues by HPLC - EPA method 8330
ORG012	4	Dec-04	508A	Screening for Polychlorinated Biphenyls by Perchlorination and Gas Chromatography - EPA Method 508A
ORG013	5	Sep-01	8015	Analysis of Volatile Petroleum Hydrocarbons (VPH, C6 to C10) in Soil and Water samples by P&T and GC/FID- EPA 8015
ORG014	4	Sep-01	8021	Determination of Aromatic and Halogenated Volatiles by GC/PID and GC/ELCD - EPA8021A
ORG015	6	Mar-02	8141	Analysis of Organophosphorus Compounds in Water, Soil, and Solid Waste by GC/NPD - EPA 8141A
ORG016	7	Mar-02	8081	Analysis of organochlorine pesticides in liquid and solid waste by GC/ECD - EPA 8081A
ORG017	5	Apr-01	549.2	Diquat and Paraquat by LSE and HPLC With UV Detection - EPA 549.2
ORG018	1	Jun-93	548	Analysis of Endothall in Drinking Water by GC/ECD - EPA 548
ORG019	4	Apr-00	6251B	Analysis of Haloacetic acids in drinking water by GC-ECD SM6251B
ORG020	5	Jan-02	547	Glyphosate by HPLC - EPA method 547
ORG021	4	Mar-01	507	Analysis of Nitrogen-Phosphorus-Containing Pesticides in Ground Water and Drinking Water By EPA method 507
ORG022	4	Mar-01	508	Analysis of organochlorine pesticides and PCB's in drinking water - EPA 508
ORG023	5	Mar-02	8015B	Analysis of Diesel Range Organics in soil and water samples by GC/FID - EPA 8015
ORG024	1	Dec-93	547M	Analysis of glyphosate in soil by EPA Method 547 modified
ORG025	2	Jul-94	24	Determination of Volatile Organic Content(VOC) in Paints and Related Coatings - EPA 24

File	Rev.	Rev	Method	Title
ORG026	9	Jan-02	524.2	Determination of Volatile Organic Compounds by EPA method 524.2 Without Cryogenic cooling - EPA 524.2
ORG027	1	Feb-94	509	Ethylene Thiourea in Drinking Water - EPA 509
ORG028	5	Oct-01	531.1	Analysis of N-Methylcarbamates in Water by Direct Aqueous Injection HPLC with Post Column Derivatization - EPA 531.1
ORG029	5	Jun-02	8151	Chlorinated acid herbicides in water, soil and solid waste - EPA 8151
ORG030	5	Sep-01	504.1	Analysis of EDB, DBCP and 123TCP in Water by Microextraction and GC/ECD -EPA 504.1
ORG031	5	May-00	515.2	Analysis of Chlorinated Acids in Water By GC/ECD - EPA Method 515.2
ORG032	1	Mar-94	N1003	Analysis of halogenated hydrocarbons in charcoal tubes
ORG033	4	Sep-01	632	Diuron (carbamates and Urea pesticides) by HPLC - EPA method 632
ORG034	1	Jun-94	OSHA57	4,4-Methylenedianiline(MDA) in Air Filter, OSHA57
ORG035	2	Jan-03	551.1	Chloral Hydrate in Drinking Water, EPA551.1 -See ORG008
ORG036	10	Feb-01	8270	Determination of Semi-Volatile Organic Compounds in Waste Water, Soil, and Other Industrial wastes by GC/MS, Capillary Column Technique - EPA Method 8270C
ORG037	5	Mar-01	548.1	Analysis of Endothall in Drinking Water By Ion Exchange Disk Extraction, Acid Methanol Methylation and GC/MS or GC/FID - EPA 548.1
ORG038	2	Mar-02	508.1	Chlorinated Pesticides, SPE, GC/ECD, EPA508.1
ORG039	7	Feb-01	525.2	Determination of Organic Compounds in Drinking Water by Liquid Solid Extraction and GC/MS - EPA 525.2
ORG040	5	Feb-01	625	GC/MS Method for Semi-Volatile Organics - EPA 625
ORG041	3	Apr-00	601/602	Analysis of Purgeable Halocarbons and Aromatics by GC/ELCD, GC/PID - EPA Method 601/602
ORG042	8	Jan-02	314	Analysis of Perchlorate (ClO4-) by Ion Chromatography, EPA Method 314.0
ORG043	3	May-02	8270M	Determination of 1,4 Dioxane by Isotopic Dilution using GC/MS - EPA 8270M
ORG044	1	Dec-97	BLS191	Fuel Hydrocarbons in Soil Arizona Method BLS-191
ORG045	4	Feb-02	3600	Cleanup Methods for Organic Analysis EPA 3600
ORG046	3	Feb-02	3500	Sample Preparation and Extraction in Hazardous Waste - EPA 3500B
ORG047	3	Feb-02	3510	Separatory Funnel Liquid-Liquid Extraction - EPA 3510B
ORG048	3	Feb-02	3550	Ultrasonic Extraction - EPA 3550B
ORG049	2	Feb-02	3580	Waste Dilution - EPA 3580A
ORG050	3	Mar-02	5030	Purge-and-Trap Extraction - EPA 5030B
ORG051			9056	Moved to Wetchem WET002
ORG052			5050	Moved to Wetchem WET007
ORG053	2	Aug-00	8015az	C6 - C32 Hydrocarbons - 8015AZ
ORG054	1	Jun-98	8031	Determination of Acrylonitrile by Gas Chromatography - EPA 8031
ORG056	2	Feb-02	3520	Continuous Liquid-Liquid Extraction - EPA 3520C

File	Rev.	Rev	Method	Title
ORG057	2	Feb-02	3540	Soxlet Extraction - EPA 3540C
ORG058	5	Mar-02	8082	Analysis of Polychlorinated Biphenyl's (PCBs) in liquid and solid waste by GC/ECD - EPA 8082
ORG059	1	Jul-99	1666	Determination of Volatile Organic Compounds Specific to the Pharmaceutical Indystry by Isotope Dilution GC/MS - EPA 1666
ORG060	3	Feb-01	624	VOC in Wastewater by GC/MS - EPA 624
ORG061	5	Jan-02	300B	Analysis of Anions (BrO3-, Br-,ClO3-,ClO2-) by Ion Chromatography, EPA Method 300.0(B)
ORG062	6	Nov-03	9020B	Determination of Total Organic Halides in water by Adsorption-Pyrolysis-Titrimetric Method , EPA9020B
ORG063	3	Jul-02	9020M	Determination of Total Halogens and Total Extractable Organic Halides by Method 9020B Modified
ORG064	3	Mar-02	608	Analysis of organochlorine pesticides and PCBs in wastewater matrices by GC/ECD, EPA Method 608.
ORG065	9	Dec-03	1625M	Determination of ultra low levels of N_Nitrosodimethylamine (NDMA) by Isotopic - EPA 1625C
ORG066	2	Feb-03	8270sim	Determination of Polynuclear Aromatic Compound by SIM Method EPA 8270 Modified
ORG067	3	Mar-02	5035	Determination of Volatil Organic Compounds in Soil by closed-system Purge-and-Trap and GC/MS- EPA 5035
ORG068	1	Jan-00	oregon	Total Petroleum Hydrocarbon (Oregon), TPH-G and TPH-D
ORG069	4	Jan-02	7199	Analysis of Hexavalent Chromium by Ion Chromatography - EPA 7199
ORG070	2	Apr-00	604	Analysis of Phenols in Municipal & Industrial Wastewater- EPA 604
ORG071	2	Mar-02	8015b	Analysis of alcohols by GC-FID EPA Method 8015B
ORG072	2	Mar-02	515.3	Analysis of chlorinated acid herbicides GC-ECD EPA Method 515.3
ORG073	3	Sep-01	505	Analysis of chlorinated pesticies by GC-ECD EPA Method 505
ORG074	1	May-00		Establishing retention times Windows for organic analysis by GC and GC/MS
ORG075	2	Mar-01	552.2	Analysis of Haloacetic acids by L-L extraction and GC-ECD EPA 552.2
ORG076	2	Mar-02		Instrument Maintenance
ORG077	2	Nov-00	218.6	Analysis of Hexavalent Chromium by Ion Chromatography EPA 218.6
ORG078	1	Apr-01	524.2M	Analysis of tert-butyl alcohol (TBA) in drinking water by EPA 524.2M
ORG079	1	May-01	luft	Analysis of TPH and BTEX by GC/MS LUFT Method
ORG080	1	Jan-02	528	Analysis of phenols in drinking water by SPE and GC/MS EPA Method 528
ORG081	1	Jan-02	526	Analysis of selected SVOA in drinking water by SPE and GC/MS EPA Method 526
ORG082	1	Apr-02	TCP-E	Analysis of 1,2,3-Trichloropropane by L-L ectraction and GC/MS SIM mode

File	Rev.	Rev	Method	Title
ORG083	1	May-02	TCP-PT	Analysis of 1,2,3-Trichloropropane by P&T and GC/MS SIM mode
ORG084	1	Oct-03	314low	Analysis of Perchlorate at low levels by IC, EPA 314
ORG085	1	Jul-02	556	Analysis of Aldehydes by L-L extraction and GC-ECD, EPA 556
ORG086	1	Jul-02	3535	SPE extraction by manual and automated mode
ORG087	1	Sep-02	300.1	Oxyhallides by EPA 300.1
ORG088	1	Oct-01	532	Diuron and Linuron by EPA 532
ORG089	1	Feb-04	1624	Acrolein and Acrylonitrile by EPA 1624
ORG090	1	Mar-04	8270SIM	Phenols low levels by GC/MS EPA 8270 SIM Mode
ORG091	1	Feb-04	326	Analysis of low level bromate
ORG092	1	Nov-04	OSHA 20M	Analysis of Hydrazine by HPLC, OSHA Method 20M (Modified)
ORG093	1	Jun-05	IC-MS/MS	Analysis of Perchlorate at Low Levels by IC-MS/MS
ORG094	1	Jan-05	8316	Analysis of Acrylamide by HPLC, EPA Method 8316
ORG095	1	Sep-05	1664M	Analysis of PBDEs by isotopic dilution GC/MS-EI EPA 1664 modified

APPENDIX 8

Acceptance Limits for QC Determinations

The Acceptance Limits for QC determinations are in some cases mandatory limits and in other cases the limits are updated periodically from past results. This process is performed though the LIMS.
For current acceptance limits please refer to the LIMS.

APPENDIX 9

INITIAL DEMONSTRATION OF CAPABILITY

A demonstration of capability (DOC) is made prior to using any test method, and at any time there is a significant change in instrument type, personnel or test method.

All demonstrations are documented through the use of the form in this appendix.

The following steps are performed.

a) A quality control sample is obtained from an outside source. If not available, the QC sample is prepared by the laboratory using stock standards that are prepared independently from those used in instrument calibration.
b) The analyte(s) are diluted in a volume of clean quality system matrix sufficient to prepare four aliquots at the concentration specified, or if unspecified, to a concentration approximately 1 to 4 time the limit of quantitation (Reporting Limit).
c) At least four aliquots are prepared and analyzed according to the test method either concurrently or over a period of days.
d) Using all of the results, calculate the mean recovery in the appropriate reporting units and the standard deviation (n-1) in the same units for each parameter of interest. When it is not possible to determine mean and standard deviation use procedures documented in the corresponding SOP (e.g. presence/absence, logarithmic values).
e) The calculated mean and standard deviation are compared to the corresponding acceptance criteria for precision and accuracy in the test method (if applicable) or in laboratory generated acceptance criteria (if there are not established mandatory criteria). If all parameters meet the acceptance criteria, the analysis of the actual samples may begin. If any one of the parameters does not meet the acceptance criteria, the analysis, the performance is unacceptable for that parameter.
f) When one or more of the tested parameters fail at least one of the acceptance criteria, the laboratory repeats the test for all parameters that failed to meet criteria. If repeated failure occurs, the laboratory will locate and correct the source of the problem and repeat the test for all compounds of interest beginning with c).

CERTIFICATION STATEMENT

The following certification statement is used to document the completion of each demonstration of capability. A copy of the certification statement is retained in the personnel records of each affected employee.

CERTIFICATION STATEMENT FOR METHOD VALIDATION

INITIAL DEMONSTRATION OF CAPABILITY CERTIFICATION STATEMENT

Date:_____

Weck Laboratories, Inc.
14859 E. Clark Avenue
City of Industry, CA 91745

Analyst(s) Name(*):_____ _____

Matrix:_____

Method and analyte:_____

We, the undersigned, CERTIFY that:
1. The analyst identified above, using the cited test method, which is in use at this facility for the analyses of samples under the National Laboratory Accreditation Program, have met the Initial Demonstration of Capability.
2. The test method was performed by the analyst identified on this certification.
3. A copy of the laboratory specific SOPs are available for all personnel on site.
4. The data associated with the initial demonstration of capability are true, accurate, complete and self-explanatory (**)
5. All raw data (including a copy of this certification form) necessary to reconstruct and validate these analyses have been retained at the facility, and, the associated information is well-organized and available for review by authorized inspectors.

_____	_____	_____
Technical Director's Name	Signature	Date
_____	_____	_____
QA Officer's name	Signature	Date

(*): List all analysts in the work cell, if applicable.
(**): True: Consistent with supporting data. Accurate: Based on good laboratory practices consistent with sound scientific principles/practices. Complete: Includes the results of all supporting performance testing. Self-explanatory: Data properly labeled and stored so that the results are clear and require no additional explanation.

APPENDIX 10
Corrective Action Report

QUALITY ASSURANCE CORRECTIVE ACTION REPORT

Date: _____ Name of Analyst: _____

Sample ID Number(s) Involved: _____

Corrective action to be implemented (1):

Were samples reanalyzed and acceptable QC obtained: **YES - NO**
Were samples reported with qualifiers: **YES - NO**

Approval of corrective action by Technical Director:

Signed: _____ Date: _____
Technical Director
Comments by TD:

Verification of Implementation of corrective action by QA Officer:

Signed: _____ Date: _____
QA Officer
Comments by QA Officer:

---

(1): Describe whether the samples were reanalyzed and/or reported with qualifiers, steps taken to investigate the problem, probable cause of problem and how to prevent from happening again.

APPENDIX 11

Laboratory Accreditations

- State of California ELAP #1132
- NELAC #04229CA
- Los Angeles County Sanitation Districts Industrial Wastewater Testing Number 10143
- South Coast Air Quality Management District Ambient air testing Certificate number 93LA107
- State of Nevada Division of Environmental Protection Certificate No. CA211-2004-41
- State of Hawaii

APPENDIX 12
Flags used for Data Qualifiers

Qualifier code	Description
<	<
>	>
> 1%	> 1 %
>1000	> 1000
>1500	>/= 1500
>2.78	> 2.78
_<2.7	< 2.78
_<fis	< 0.588
_<FL	No free liquids
_<FP	< 65
_>23	>/= 23
_>230	>/= 230
_>FB	> 750
_>fis	> 750
_>FL	Contains free liquids
_>FP	> 200
_0.00	0.000
_1600	>/= 1600
_16so	>/= 16000
_5700	>/= 5700
_A	Absent
_C	Canceled
_Cl	COD result is analyzed with chloride correction.
_ext	Extracted
_F-01	No fumes or gases but a mild odor detected.
_F-NR	No reaction
_FP70	< 70
_hold	Hold
_nd	None Detected
_P	Present
_pH<2	<2
_seeA	See Attached
_V	Grey
_V1	Brown
_Vis	None Visible
_Vis<	Visible < 1% vol
0	0 % Survival
01	-0.087
02	-0.143
03	-0.045
04	-0.069
100	100 % Survival
48.4	48.4 J
57000	>/= 57000
95	95 % Survival
A-01	[Custom Value]
A-02	[Custom Value]
ABHRP	The sample was treated with Silver, Barium, H+, and Organics cartridges to minimize chloride, sulfates, and organic interferences prior to analysis.

Qualifier code	Description
AgBaH	The sample was treated with Silver, Barium and H+ cartridges to minimize chloride and sulfates interferences prior to analysis.
AgH	The sample was treated with silver, and H+ cartridges to minimize chloride interferences prior to analysis.
AS-1	None Detected
AS-2	Chrysotile greater than 1 %
B	Analyte is found in the associated blank as well as in the sample (CLP B-flag).
B-01	The sample dilutions set-up for the BOD analysis did not meet the oxygen depletion criteria of at least 2 mg/l dissolved oxygen depletion. Therefore the reported result is an estimated value only.
B-02	The sample dilutions set up for the BOD analysis failed to met the criteria of a residual dissolved oxygen of at least 1 mg/l. Therefore the reported result is an estimated value only.
B-03	Analyte is found in the travel blank as well as in the sample. The cause of the contamination was found to be a bad batch of VOA vials containing HCL as preservative.
B-04	Analyte was found in the travel blank, which was possibly contaminated in the lab during preparation. The batch was accepted since this analyte was not detected for all the samples in the batch.
B-05	Contamination in blank is carryover from previous sample analyzed in same purge vessel. This contamination is not present in purge vessels that the associated samples were purged in.
B-06	Analyte is found in the method blank, which was possibly contaminated during sample preparation. The batch was accepted since this analyte was not detected or 10x of the blank for samples in the batch.
B-07	Analyte is found in the method blank at levels above the MDL but below the reporting limit.
BaH	The sample was treated with Ba and H cartridges to reduce sulfates background interferences.
BR	Analyte was found in the method blank, which was possibly contaminated in the lab during preparation. The reporting limit was raised to account for the contamination.
BS-01	The recovery of this BS was over the control limit. Batch was accepted based on another acceptable BS and RPD.
BS-H	The recovery of this analyte in LCS was over control limit. Sample result is suspect.
C-01	To reduce matrix interference, the sample extract has undergone sulfuric acid clean-up, method 3665, which is specific to hydrocarbon contamination.
C-03	To reduce matrix interference, the sample extract has undergone silica-gel clean-up, method 3630, which is specific to polar compound contamination.
C-04	To reduce matrix interference, the sample extract has undergone florisil clean-up, method 3620, which is specific to non-polar compound contamination.
C-05	To reduce matrix interference, the sample extract has undergone GPC clean-up, method 3640, which is specific to contamination from high molecular weight material.
CN-1	See case narrative for an explanation of results.
CN-2	See Case Narrative
CV-SL	The surrogate was low bias in CCV. Sample result was justified valid since all target analytes in CCV were acceptable.
D-01	This sample appears to contain volatile range organics.
D-02	Hydrocarbon pattern present in the requested fuel quantitation range but does not resemble the pattern of the requested fuel.

Qualifier code	Description
D-03	The result for this hydrocarbon is elevated due to the presence of single analyte peak(s) in the quantitation range.
D-04	The hydrocarbons present are a complex mixture of diesel range and heavy oil range organics.
D-06	The sample chromatographic pattern does not resemble the fuel standard used for quantitation.
D-08	Results in the diesel organics range are primarily due to overlap from a gasoline range product.
D-09	Results in the diesel organics range are primarily due to overlap from a heavy oil range product.
D-10	The heavy oil range organics present are due to hydrocarbons eluting primarily in the diesel range.
D-12	Results in the Gasoline Range are primarily due to overlap from a heavier fuel hydrocarbon product.
D-13	Low boiling point fuel hydrocarbons are present below the requested fuel quantitation range.
D-14	Unidentified Hydrocarbons < C17.
D-15	Diesel
D-16	Gasoline
D-17	Diesel + unidentified hydrocarbons.
D-20	Unidentified Hydrocarbons > C9.
D-25	The hydrocarbon resembles weathered diesel.
D-30	Unidentified hydrocarbons C9-C16.
D-35	Sample does not display a fuel pattern. Sample contains several discreet peaks.
DryWt	The result is in dry weight basis.
E	The concentration indicated for this analyte is an estimated value above the calibration range of the instrument. This value is considered an estimate (CLP E-flag).
E-01	The concentration indicated for this analyte is an estimated value above the calibration range.
FILT	The sample was filtered prior to analysis.
FRE-P	Free product was observed in the sample container.
G-04	This sample contains compounds not identified as Benzene, Toluene, Ethylbenzene or Xylene.
GC-05	Results confirmed by GCMS.
GC-10	A unknown compound is coeluting with MTBE. This is Probably causing an artificially high MTBE value.
GC-15	Unidentified Hydrocarbons C6 - C12.
GC-20	An unknown compound is coeluting with naphthalene. Probably causing an artificially high naphthalene value.
GC-25	Weathered gasoline.
GC-30	MTBE did not confirm via GCMS on a sample from this site. Thus, MTBE for this sample was reported as non-detect.
GC-40	Naphthalene analyzed by GCMS - method 8260B.
GC-NC	8260 confirmation analysis was performed; initial GC results were not supported by GC/MS analysis and are reported as ND.
HDSP1	Sample aliquot taken from VOA vial with headspace (air bubble greater than 6 mm diameter).

Qualifier code	Description
HDSP2	Sample received in container other than VOA with headspace. Transferred at lab to VOA vial.
I-01	Due to matrix interference, the sample cannot be accurately quantified. The reported result is qualitative.
I-02	This result was analyzed outside of the EPA recommended holding time.
I-03	Low internal standard recovery possibly due to matrix interference or leak in system. The result is suspect.
I-04	No internal standard recovery
I-05	Low internal standard recovery possibly due to matrix interference . The result is suspect.
I-06	Contaminated IS spiking solution
I-07	High internal standard recovery possibly due to matrix interference.
J	Detected but below the Reporting Limit; therefore, result is an estimated concentration (CLP J-Flag).
J-01	No J value detected.
L-01	The recovery of this analyte in LCS was below control limit. Sample result is suspect.
L-02	The recovery of this analyte in LCS was outside control limits. Sample was accepted based on the remaining LCS, MS and MSD results.
L-03	The recovery of this analyte in LCS or LCSD was outside control limit. Sample was accepted based on the remaining LCS, LCSD or LCS-LL.
L-04	The recovery of this analyte in QC sample was outside control limits. Sample was justified as ND based on the low level standard at or below the reporting limit.
M	Sample result is matrix suspect.
M-01	Result is not valid due to high sample background
M-02	Due to the nature of matrix interferences, sample was diluted prior to extraction. The reporting limits were raised due to the dilution.
M-03	Due to insufficient sample volume, sample was diluted prior to extraction. The reporting limits were raised due to the dilution.
M-04	Due to the nature of matrix interferences, sample extract was diluted prior to analysis. The reporting limits were raised due to the dilution.
M-05	Due to the nature of matrix interferences, sample was diluted prior to analysis. The reporting limits were raised due to the dilution.
M-06	Due to the high concentration of analyte in the sample, sample extract was diluted prior to analysis. The reporting limit was raised due to this dilution.
M-07	Due to high concentration of solid particles in the sample, a smaller volume was used for analysis. The reporting limit was raised due to this dilution.
M-08	Due to insufficient sample volume, sample was diluted prior to analysis of pH.
MIC-1	All presumptive fermentation tubes did not show any amount of gas, growth or acidity. Therefore, the fecal coliform procedure was not needed.
MIC-2	Result is suspect due to QC failure.
MSA	This result was determined by method of standard addition.
ns	No sample received
O-01	This compound is a common laboratory contaminant.
O-02	Due to matrix interference, the sample cannot be accurately quantitated. The reported result is qualitative.
O-03	The concentration reported is an estimated value above the linear quantitation range. Dilution and reanalysis is being performed and an amended report will follow.
O-04	This sample was analyzed outside the EPA recommended holding time.

Qualifier code	Description
O-05	This sample was extracted outside of the EPA recommended holding time.
O-06	Reanalysis by an alternate column or method has confirmed the identification and/or concentration of this result.
O-07	Sample date and/or time was not provided by client. Therefore, defaulted date and/or time have been entered. The analysis may be outside of recommended holding time.
O-08	The original extraction of this sample yielded QC recoveries outside acceptance criteria. It was re-extracted after the recommended maximum hold time.
O-09	This sample was received with the EPA recommended holding time expired.
O-10	The original analysis of this sample yielded QC recoveries outside acceptance criteria. It was re-analyzed after the recommended maximum hold time.
O-11	The sample was originally analyzed within holding time. However, it was reanalyzed with dilution that exceeded the recommended holding time.
O-12	The sample was originally analyzed within holding time. However, it was reanalyzed without dilution that exceeded the recommended holding time.
O-13	The original analysis of this sample yielded IPC or Calibration Blank recoveries outside acceptance criteria. It was re-analyzed after the recommended maximum hold time.
O-14	This analysis was requested by the client after the holding time was exceeded.
O-21	This sample was analyzed that exceeded 1 hours past the EPA recommended holding time.
O-22	This sample was analyzed that exceeded 2 hours past the EPA recommended holding time.
O-23	This sample was analyzed with the recommended holding time exceeding 3 hours.
O-24	This sample was analyzed that exceeded 4 hours past the EPA recommended holding time.
P-01	Low recovery due to preservative. Sample data accepted based on passing LCS result.
P-5	Due to the nature of the sample matrix a 1:10 dilution was necessary to perform a corrosivity measurement.
PH	Insufficient preservative to reduce the sample pH to less than 2. Sample was analyzed within 14 days of sampling, but beyond the 7 days recommended for Benzene, Toluene, and Ethylbenzene.
pH-01	Due to insufficient amount of sample, the ratio of the water extraction has to increase to 2X.
PRELM	Preliminary result. Revised report to follow.
PS-1	The recovery of the matrix spike is outside acceptance limits due to present of the inhibiting agents. Only diluted post spike can be recovered.
Q-08	This analyte has high bias in the QC sample, but not found in the samples.
Q-09	This analyte bias high in QC sample. A fresh spiking solution is going to be prepared.
Q-10	This analyte bias high in QC sample
Q-11	This analyte is low in QC sample. A fresh spiking solution is going to be prepared.
Q8141	Demeton-O and -S were spiked in QC samples, recovery for total Demeton is acceptable
QB-01	The method blank contains analyte at a concentration above the MRL; however, concentration is less than 10% of the sample result, which is negligible according to method criteria.

Qualifier code	Description
QC-5	Sample was originally analyzed within hold time. However, it was determined that positive interference was contributing to the sample result. So the sample was reanalyzed at a dilution to eliminate the interference.
QC-6	Sample was originally analyzed within hold time. However, the CCV corresponding to this sample was invalid and the sample was re-analyzed at a later time.
QI-01	Internal standards for this sample were out of control during the initial analysis performed within hold time. Immediate re-analysis (outside of recommended hold time) has confirmed the original result.
QL-01	Sample results for the QC batch were accepted based on LCS/LCSD percent recoveries and RPD values.
QL-02	Low recovery of this analyte in the qc sample. Sample data was confirmed ND based on reporting level standard.
QM-01	The spike recovery for this QC sample is outside of established control limits possibly due to sample matrix interference.
QM-02	The RPD and/or percent recovery for this QC spike sample cannot be accurately calculated due to the high concentration of analyte inherent in the sample.
QM-03	Multiple analyses indicate the percent recovery exceeds the Quality Control acceptance criteria due to a matrix effect.
QM-04	Visual evaluation of the sample indicates the RPD or QC spike is above the control limit due to a non-homogeneous sample matrix.
QM-05	The spike recovery was outside acceptance limits for the MS and/or MSD due to possible matrix interference. The LCS and/or LCSD were within acceptance limits showing that the laboratory is in control and the data is acceptable.
QM-06	Due to noted non-homogeneity of the QC sample matrix, the MS/MSD did not provide reliable results for accuracy and precision. Sample results for the QC batch were accepted based on LCS/LCSD percent recoveries and RPD values.
QM-07	The spike recovery was outside acceptance limits for the MS and/or MSD. The batch was accepted based on acceptable LCS recovery.
QM-08	Due to the nature of matrix interferences, sample was diluted prior to analysis. The MS/MSD could not be quantitated due to the dilution. The batch was accepted based on acceptable LCS recovery.
QM-09	The recoveries of MS/MSD are not valid due to high sample background
QM-10	LCS/LCSD were analyzed in place of MS/MSD.
QM-11	
QM-12	Spiked with pesticides
QM-13	The spike recovery was outside acceptance limits for the MS and/or MSD, and/or LCS. The batch was accepted based on acceptable ICV and CCV recovery where re-analysis is prohibited.
QM-14	QC limits are not applicable for the MS/MSD due to positive present of target analyte in the matrix sample.
RxS	This sample does not contain levels of reactive sulfide that are characteristic of a reactive waste as defined by 40CFR 261.23. Concentration is below 500 ppm.
S-01	The surrogate recovery for this sample is not available due to sample dilution required from high analyte concentration and/or matrix interference's.
S-02	The surrogate recovery for this sample cannot be accurately quantified due to interference from coeluting organic compounds present in the sample extract.
S-03	High surrogate recovery for this sample is possibly due to a sample matrix effect. The data was accepted since all target analytes were not detected.

Qualifier code	Description
S-04	The surrogate recovery for this sample is outside of established control limits due to possible sample matrix effect.
S-06	The recovery of this surrogate is outside control limits due to sample dilution required from high analyte concentration and/or matrix interference's.
S-07	High surrogate recovery for this sample is possibly due to sample matrix effect. The sample was re-extracted and re-analyzed, and the results was comparable with the original one.
S-08	No surrogate recovery, possibly surrogate spiking was missed.
S-09	Wrong amount spiked, quantification is not accurate
S-10	Surrogate recovery outside method QC limits due to extraction related problems
S-11	No analyte recovery, possibly analyte spiking was missed.
S-AC	Acid surrogate recovery outside of control limits. The data was accepted based on valid recovery of remaining two acid surrogates.
S-BLK	Surrogate recovery outside of control limits. The data was accepted since all target analytes were not detected
S-BN	Base/Neutral surrogate recovery outside of control limits. The data was accepted based on valid recovery of remaining two base/neutral surrogates.
W-04	Free liquid was visually observed in the sample container but the sample did not exhibit free liquid as defined by 40CFR 264.314 or 265.314.
X-01	The recovery was outside acceptance limits due to extraction problems
QM-4X	The spike recovery was outside of QC acceptance limits for the MS and/or MSD due to analyte concentration at 4 times or greater the spike concentration. The QC batch was accepted based on LCS and/or LCSD recoveries within the acceptance limits.
QM-BG	The spike recovery was outside of QC acceptance limits for the MS and/or MSD due to sample background. The QC batch was accepted based on LCS and/or LCSD recoveries within the acceptance limits.
QR-01	Analyses are not controlled on RPD values from sample concentrations less than 10 times the reporting limit. QC batch accepted based on LCS and/or LCSD QC results.
QR-02	The RPD result exceeded the QC control limits; however, both percent recoveries were acceptable. Sample results for the QC batch were accepted based on percent recoveries and completeness of QC data.
QR-03	The RPD value for the sample duplicate or MS/MSD was outside of QC acceptance limits due to matrix interference. QC batch accepted based on LCS and/or LCSD recovery and/or RPD values.
R-01	The Reporting Limit for this analyte has been raised to account for matrix interference.
R-02	Elevated Reporting Limits due to limited sample volume.
R-03	The Reporting Limit for this analyte has been raised to account for interference from coeluting organic compounds present in the sample.
R-04	Due to foaming, the sample was diluted prior to analysis. The reporting limits were raised due to the dilution.
R-05	The sample was diluted due to the presence of high levels of non-target analytes resulting in elevated reporting limits.
ra228	-0.0115
RxCN	This sample does not contain levels of reactive cyanide that are characteristic of a reactive waste as defined by 40CFR 261.23. Concentration is below 250 ppm.

Qualifier code	Description
S-BS	Surrogate recovery outside of control limits. The data was accepted based on valid recovery of the target analytes.
S-DUP	Duplicate analysis confirmed surrogate failure due to matrix effects.
S-GC	Surrogate recovery outside of control limits. The data was accepted based on valid recovery of the remaining surrogate.
S-HI	High surrogate recovery was confirmed as a matrix effect by a second analysis.
S-LIM	Surrogate recoveries outside method QC limits. Site matrix effects verified by 10% duplicate analysis (including sample duplicate and MS/MSD analysis).
S-LOW	Low surrogate recovery confirmed as a matrix effect by a second analysis.
S-MS	Surrogate recovery outside of acceptance window confirmed as matrix effect by analysis of MS/MSD on this sample.
S-MS1	Surrogate recovery outside of control limits. The data was accepted based on valid recovery of the target analytes.
S_EMS	Analysis subcontracted to EMS Laborartories, ELAP Certificate 1119
S_FGL	Analysis subcontracted to FGL Laboratories, NELAC Certificate 0110CA
S_PAR	Analysis subcontracted to Paradigm Analytical, ELAP Certificate 2451.
TIC	Tentatively Identified Compound. The reported concentration is relative concentration based on the nearest internal standard. If the library search produces no matches at, or above 85%, the compound is reported as unknown.
TOX-1	second column has more than 10% of first column
TR-1	The sample was treated with Ba and RP cartridges to reduce background interference.
U-01	The sample was received without the proper preservation.
U-02	The sample was received at the lab without proper preservation. However, the sample was then preserved at the lab.
W-01	No determinable quantities of cyanide amenable to chlorination.