ESTCP
Cost and Performance Report

(CP-0004)

Mineralization of TNT, RDX, and By-Products in an Anaerobic Granular Activated Carbon-Fluidized Bed Reactor

April 2003

ENVIRONMENTAL SECURITY
TECHNOLOGY CERTIFICATION PROGRAM

U.S. Department of Defense

COST & PERFORMANCE REPORT
ESTCP Project: CP-0004

TABLE OF CONTENTS

		Page
1.0	EXECUTIVE SUMMARY	1
1.1	BACKGROUND	1
1.2	OBJECTIVES OF THE DEMONSTRATION	1
1.3	REGULATORY DRIVERS	1
1.4	DEMONSTRATION RESULTS	2
1.5	STAKEHOLDER/END-USER ISSUES	2
2.0	TECHNOLOGY DESCRIPTION	3
2.1	OVERALL TREATMENT TECHNOLOGY DESCRIPTION	3
2.2	BIODEGRATION OF ENERGETICS	4
2.3	PREVIOUS TESTING OF THE ANAEROBIC GAC-FBR	4
2.4	ANAEROBIC PINKWATER TREATMENT — PRIOR TEST RESULTS	5
2.5	FACTORS AFFECTING COST AND PERFORMANCE	6
2.6	ADVANTAGES AND LIMITATIONS OF THE GAC-FBR	6
3.0	DEMONSTRATION DESIGN	7
3.1	PERFORMANCE OBJECTIVES	7
3.2	SITE SELECTION	8
3.3	FACILITY HISTORY AND MISSION	8
3.4	PHYSICAL SET-UP AND OPERATION	8
3.5	SAMPLING, MONITORING AND ANALYTICAL PROCEDURES	11
4.0	PERFORMANCE ASSESSMENT	13
4.1	PERFORMANCE DATA	13
4.2	PERFORMANCE CRITERIA	15
4.3	DATA ASSESSMENT	16
4.4	TECHNOLOGY COMPARISON	18
4.5	PROCESS RELIABILITY	18
5.0	COST ASSESSMENT	19
5.1	COST REPORTING	19
5.2	COST ANALYSIS	22
5.3	COST COMPARISON	23
6.0	TECHNOLOGY IMPLEMENTATION	25
6.1	COST OBSERVATIONS	25
6.2	PERFORMANCE OBSERVATIONS	25
6.3	SCALE-UP	25
6.4	END-USER ISSUES	26

TABLE OF CONTENTS (continued)

Page

6.5 APPROACH TO REGULATORY COMPLIANCE AND ACCEPTANCE . . . 26
6.6 LESSONS LEARNED 26

7.0 REFERENCES 29

APPENDIX A POINTS OF CONTACT A-1

APPENDIX B ENERGETICS ANALYSIS B-1

LIST OF FIGURES

		Page
Figure 1.	Anaerobic Fluidized Bed System	3
Figure 2.	Pinkwater Treatment Facility at McAAP	9
Figure 3.	Simplified Process Flow Diagram of Anaerobic GAC-FBR Demonstration-Scale System at McAAP	10
Figure 4.	TNT Removal	13
Figure 5.	RDX Removal	14
Figure 6.	TNB Removal	14

LIST OF TABLES

		Page
Table 1.	Performance of a Pilot GAC-FBR (9/19-10/1/98)	5
Table 2.	Performance Objectives	7
Table 3.	Trace Nutrients and Minerals Added to System	11
Table 4.	Sampling Plan and Protocols	12
Table 5.	Performance Criteria	16
Table 6.	Performance and Performance Confirmation Methods	17
Table 7.	Operational Costs for the Anaerobic GAC-FBR	20
Table 8.	ECAM Analysis for Current GAC Absorption System	21
Table 9.	ECAM Analysis for Proposed Alternative Process – Anaerobic GAC-FBR	22

LIST OF ACRONYMS

AAP	Army Ammunition Plant
AMC	Army Materiel Command
AWWA	American Water Works Association
BOD	biological oxygen demand
CERL	Construction Engineering Research Laboratory
COD	chemical oxygen demand
DAT	diaminotoluene
DNT	dinitrotoluene
DoD	Department of Defense
ECAM	Environmental Cost Analysis Methodology
FBR	fluidized bed reactor
GAC	granular activated carbon
gpm	gallons per minute
HMX	tetramethylene-tetranitramine
kgal	thousands of gallons
µg/L	micrograms per liter
mg/L	milligrams per liter
McAAP	McAlester AAP
NPDES	National Pollutant Discharge Elimination System
ODEQ	Oklahoma Department of Environmental Quality
O&M	Operations and Maintenance
PLC	programmable logic controller
RAAP	Radford Army Ammunition Plant
RDX	hexahydro-1,3,5-trinitro-1,3,5-triazine
TNB	trinitrobenzene
TNT	trinitrotoluene

ACKNOWLEDGMENTS

We wish to acknowledge the support received at McAlester Army Ammunition Plant (MCAAP) and Construction Engineering Research Laboratory (CERL) for their support in this project. MCAAP personnel include Scott Sullivan, Elaine Ketchum and Kevin Coxsey, who collectively took responsibility for operating the system on site after it was installed. Additional MCAAP personnel who assisted include the electricians, pipe fitters and safety personnel who constructed and installed the system. CERL personnel include Don Cropek, Pat Kemme, Neil Adrian and Clint Arnett, who performed specialized analysis for explosives and their by-products, particularly triaminotoluene.

EFX Systems has degenerated largely to a company in name only. The technical personnel have moved, together as a group, to Retec. The POC there is:

Dr. Robert F. Hickey	The RETEC Group, Inc. 3900 Collins Road, Suite 1024 Lansing, MI 48910-8396	517-324-9000 Project Manager at EFX 517-336-9275 rhickey@retec.com

Technical material contained in this report has been approved for public release.

This page left blank intentionally.

1.0 EXECUTIVE SUMMARY

1.1 BACKGROUND

A number of Army Ammunition Plants (AAPs) generate wastewater contaminated with 2,4,6-trinitrotoluene (TNT), hexahydro-1,3,5-trinitro-1,3,5-triazine (RDX), and tetramethylene-tetranitramine (HMX) from loading, assembly, and packing of munitions, as well as washout or demilitarization operations. These wastewater streams are commonly referred to as pinkwater due to the characteristic color of the water. The current state-of-the-art for treatment of pinkwater is adsorption onto granular activated carbon (GAC). The use of GAC adsorption is both costly and generates a by-product (spent GAC), which is a hazardous waste.

The goals of applying biological treatment using the Anaerobic GAC-fluidized bed reactor (GAC-FBR) were to reduce operating costs and eliminate the generation of the hazardous waste by-product.

The objectives of the project were to evaluate the ability of Anaerobic GAC-FBR to treat pinkwater over a year's period, and determine the economics of treatment compared to adsorption using GAC. The GAC-FBR demonstration unit was manufactured by EFX[1] specifically for this work. The system was tested hydraulically and electrically at EFX and then transported to McAlester Army Ammunition Plant (McAAP) for the demonstration. EFX personnel assisted in the installation and commissioning of the system at McAAP. EFX then trained McAAP personnel on normal monitoring, sampling and Operations and Maintenance (O&M) activities required, and provided continued technical and analytical support throughout the duration of the demonstration.

1.2 OBJECTIVES OF THE DEMONSTRATION

The primary objectives of the demonstration were to determine the effectiveness of the technology in removing total nitrobodies (including TNT, RDX and HMX) from the pinkwater effluent stream, the relative ease of operation and reliability of the technology, and the cost-effectiveness and appropriateness of the technology for use at AAP and other Department of Defense (DoD) sites where similar wastewater effluents are generated.

1.3 REGULATORY DRIVERS

Pinkwater is a regulated hazardous waste listed as K044 (wastewaters from munitions production). It is regulated by the Oklahoma Department of Environmental Quality (ODEQ) at the current pretreatment discharge point, with an allowable discharge of 1 mg/L. Many other locations regulate the discharge at 100 µg/L as total nitrobodies. "Nitrobodies" is a general term for explosive compounds containing nitro-groups as the oxidizer, and in this case, would mean the sum of the concentrations of TNT, RDX, HMX and trinitrobenzene (TNB – an impurity in TNT manufacture), as well as their partial breakdown products as identified by the Environmental Protection Agency Standard Method 8330.

[1]EFX, Systems Inc.

The goal of this demonstration was to meet the 100 µg/L limit for total nitrobodies. This is more stringent than the current pretreatment limits as applied at McAAP, but was used to qualify the technology for more general use through the Army industrial base.

1.4 DEMONSTRATION RESULTS

The technology was very effective in removing total nitrobodies, meeting McAAP's discharge limits without a single failure, while meeting the most stringent limit throughout DoD of 100 µg/L total nitrobodies 94% of the time. Only four of 68 analyses were above detection limits, and above the more stringent 100 µg/L limit for total nitrobodies. Each of these results was during periods of operational problems with the system.

The reliability of the technology was demonstrated through consistent performance, despite several unintentional shutdowns due to design and equipment issues addressed in this report. The relative ease of operation, and thus the operational cost, suffered due to these same design issues, a situation which can be corrected in future applications of this technology. Operational costs for the anaerobic GAC-FBR were $67,060 per year. The capital cost for the GAC-FBR was $195,000. The total cost for installation of the unit plus maintenance for the demonstration period was $95,000. Adding amortized annual capital costs of $25,300 brings the total cost of this technology to $92,360 per year. While this compares favorably to the cost of GAC adsorption, $106,800 for the same base case- loading rate, the operational costs of the system were significantly above the original estimate. Most of the increase was due to operator time to address malfunctions caused by breakdowns in pumps, heaters, and analytical probes. Many of these should be resolved, and operational cost reduced, by correcting a design flaw which leads to unsteady flow as the system through-put changes. No capital cost was included for the GAC adsorption system, as it is currently in place. Increasing the loading on the anaerobic GAC-FBR system does not result in a proportional cost increase, as it does for the GAC adsorption system.

The payback period for the capital cost, including the installation and maintenance costs as discussed above, is based on the difference between the direct costs associated with the treatment processes, which is estimated at $39,740 per year. The payback period is the capital cost divided by the difference, or 7.3 years. Assuming redesign of the system improves reliability, and thus reduces labor requirements to eight hours per week over the current system, still a conservative estimate based on other installations of this technology, the payback period would be closer to 4.7 years.

1.5 STAKEHOLDER/END-USER ISSUES

There are currently seven other Army Ammunition Plants which generate pinkwater or spent GAC. This process may be applicable to any of these installations, which include Bluegrass AAP, Crane AAA, Hawthorne AAP, Iowa AAP, Kansas AAP, Lone Star AAP, and Milan AAP. This system may also be applicable to Radford AAP for propellant wastewater. It would be important that these installations have conventional secondary wastewater treatment plants, and access via sewer lines to the plants. Each installation would have to be judged separately to determine whether the anaerobic GAC-FBR would be applicable to it.

2.0 TECHNOLOGY DESCRIPTION

2.1 OVERALL TREATMENT TECHNOLOGY DESCRIPTION

The anaerobic biological GAC-FBR is a fixed-film, biological treatment system utilizing GAC as a support media upon which the bacteria attach and grow. A simplified schematic of the system is shown in Figure 1. In the process, the water to be treated is pumped upwards through a bed of GAC, fluidizing the media. Biodegradation of an added organic substrate, in this case ethanol, is achieved by a thin film of microorganisms that coats each particle. This biofilm converts the organic carbon to harmless end-products (i.e., methane, carbon dioxide and some new biomass). Nitroaromatics in the pinkwater are concurrently transformed to reduced products that eventually can be completely mineralized under anaerobic conditions or subsequent aerobic polishing treatment. Bioconversion of the nitrobodies proceeds to the aminated analogs of the contaminants, such as triaminotoluene. The aminated analogs are not stable in water, and the rings cleave to produce aliphatic amines, which are then degraded aerobically. This is a two step process for treatment in which compounds such as TNT, which are highly resistant to aerobic biodegradation, are converted under anaerobic conditions to analogs which are easily biodegradable under aerobic conditions. The effluent from this plant then flows to a conventional secondary wastewater treatment plant.

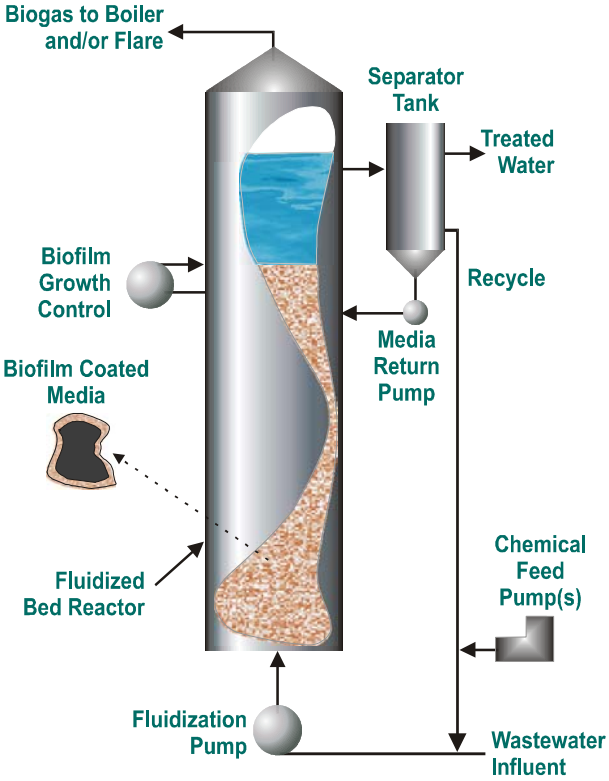

Figure 1. Anaerobic Fluidized Bed System.

The high biomass concentrations achieved in the fluidized bed result in high removal efficiencies. This efficiency, when combined with the vertical configuration, yields a small reactor footprint. The FBR treatment system is not as susceptible to shock loads as a conventional biological treatment plant. The granular activated, carbon-bed media adsorbs spikes of the explosives, and "stores" them until the micro-organisms have transformed nitrobodies present in the aqueous phase. The "stored" compounds are released when bulk liquid concentrations are lowered in the fluid, and the driving force is reversed, resulting in desorption of the stored explosives and subsequent transformation to reduced products. Key advantages of biological fluidized bed reactor systems include:

- Large surface area for biomass attachment;
- High biomass concentrations;
- Elimination of plugging or channeling (no backwash required); and
- Biomass carrier can be tailored to optimize performance (i.e., GAC).

This translates to the following advantages of the process:

- Short hydraulic residence times (minutes);
- Small "footprint" skid mounted units;
- Low installation costs;
- Low material costs;
- Low operation and maintenance costs; and
- Robust, reliable treatment.

2.2 BIODEGRATION OF ENERGETICS

Nitrated organic compounds in wastewater streams at DoD facilities are the result of manufacture and demilitarization of explosives. These nitrated organics are recalcitrant to biological degradation due to the presence of highly oxidized nitro groups on the aromatic ring. The electron-withdrawing effect of the nitro groups inhibits electrophilic attack by oxygenase enzymes (Bruhn *et al.*, 1987). This step becomes more difficult as the number of nitrosubstitutions increases (Spain, 1995). Compounds such as TNT and RDX, therefore, have a long persistence in the natural environment. Spanggord *et al.* (1991) demonstrated complete degradation of 2,4 DNT by a *Pseudomonas sp.* with stoichiometric ratios of nitrite released. Although oxygenase-based degradation of nitrosubstituted organics occurs for the more highly substituted compounds such as TNT and RDX, the initial step in biodegradation in the natural environment appears to be a reduction of the nitrosubstituted group to the corresponding amine under both aerobic and anaerobic conditions. This rate-limiting step can be highly accelerated under strictly anaerobic conditions (VanderLoop *et al.*, 1998).

VanderLoop *et al.* (1998), demonstrated that TNT can be transformed into compounds amenable to aerobic mineralization in a laboratory reactor. Hwang *et al.* (2000), demonstrated the sequential conversion of the nitro-groups to amino-groups in TNT degradation, and Adrian and Sutherland, 1998, demonstrated the degradation of RDX under anaerobic conditions. In a previous pilot-test, the ability of the Anaerobic GAC-FBR process to consistently reduce the concentration of total nitrobodies to below 100 µg/L in pinkwater was observed (Maloney *et al.*, 2002).

Current practice to control contamination from pinkwater requires adsorption of the TNT and RDX onto granular activated carbon. This is an expensive process (approximately $100/kgal for pinkwater compared to Army Material Command (AMC) average of $2/kgal for industrial wastewater [Dept. of the Army, 1995]), and produces a byproduct hazardous waste in the spent activated carbon. Anaerobic processing of pinkwater and other nitroaromatic containing wastewaters appears to be a reliable, cost-effective treatment option.

2.3 PREVIOUS TESTING OF THE ANAEROBIC GAC-FBR

The GAC-FBR process has been tested for dinitrotoluene (DNT) at the laboratory scale and at bench-scale, in the field with 4-inch columns. Conversion of the DNT to diaminotoluene (DAT) has been demonstrated in the Anaerobic GAC-FBR, followed by aerobic mineralization of the DAT. A pilot scale test of this process was subsequently conducted for DNT wastewater at Radford Army Ammunition Plant (RAAP). This technique was shown to be less expensive than GAC for the treatment of a waste stream contaminated with high concentrations of DNT (IT Corp., 1996).

A second pilot test was conducted on a munitions production wastewater at the Naval Surface Warfare Center, Indian Head Division. For this demonstration, the ability to remove propylene glycol dinitrate from a Biazzi nitrator effluent stream was successfully demonstrated. This high total dissolved solids wastewater was treated under denitrifying conditions concurrently reducing a considerable portion of the nitrate in the process.

A pilot-scale test was conducted at MCAAP for the treatment of pinkwater. As part of this project, design parameters, such as minimum hydraulic retention time, permissible TNT and total nitrobodies loading rate, and acceptable operating temperature were established. These results were used in developing the criteria to size the system needed for treating 7.5 gpm of pinkwater at McAAP that was used for this demonstration. The design parameters were empty bed hydraulic retention time of 4.2 hours, total nitrobodies loading rate of 0.22 kg/m^3-day, and temperature above 90 °C.

2.4 ANAEROBIC PINKWATER TREATMENT — PRIOR TEST RESULTS

The anaerobic GAC-FBR for nitroaromatic compounds has been under development for several years by U.S. Army Construction Engineering Research Laboratory (CERL), in conjunction with the University of Cincinnati and EFX Systems, Inc. Initial work was performed on propellant wastewater containing dinitrotoluene (Maloney *et al.*, 1998 and VanderLoop *et al.*, 1998). Success with dinitrotoluene extended the research to TNT, RDX and pinkwater (Adrian and Sutherland, 1998, VanderLoop *et al.*, 1998 and Hwang *et al.*, 2000).

Initial pilot testing at McAAP indicated it is possible to produce an effluent with less than 100 µg/L total nitrobodies on a consistent basis. Results from one test period from a pilot test conducted for pinkwater are presented below in Table 1. During this test period, TNT concentrations in the feed averaged 29.2 mg/L. The only other nitrobody detected was 2-amino- 4,6 DNT, which was detected only once at 8.7 mg/L. No nitrobodies were detected in the system effluent; all were below the 0.03 mg/L detection limit. The removal efficiency for COD averaged 77.4 percent. The ratio of applied electron donor to TNT during this period averaged 27.8 mg COD/mg TNT. The TNT loading rate averaged 0.34 kg/m^3-d.

Table 1. Performance of a Pilot GAC-FBR (9/19-10/1/98).

Parameter	Units	Influent	Effluent	% Removal
TNT	mg/L	29.2 (9.8)	<0.03	>99.9
RDX	mg/L	<3.0	<0.03	--
HMX	mg/L	<3.0	<0.03	--
TNB	mg/L	<3.0	<0.03	--
2-amino-4,6-DNT	mg/L	<3.0*	<0.03	--
sCOD**	mg/L	902 (156)	198 (35)	78.0
TSS	mg/L	13 (9)	22 (16)	--

*Detected in one sample at 8.7 mg/L
**Includes added ethanol (sCOD = soluble COD)
OLR = 9.3 kg COD/m^3-d
TNT LR = 0.34 kg/m^3-d
Flow = 1.5 gpm
HRT = 125 minutes
Temperature = 90°F

2.5 FACTORS AFFECTING COST AND PERFORMANCE

The principal design parameter that affects capital cost is the allowable loading in mass per volume-time. This loading is expressed as $kg/m^3/day$ for the anaerobic GAC-FBR, and determines the overall size of the reactor. The mass of contaminant being applied per day is determined from the flow rate of the wastewater, and the concentration of the contaminant in the wastewater. Once the kg/day of applied contaminant is established, the required size of the reactor can be determined.

The concentration of contaminant varies with time in an industrial wastewater stream, so the actual volume selected uses a safety factor which allows for variations in concentration. For this demonstration, a safety factor of 50% was used, thus the reactor was able to handle 50% more mass per day than the overall average concentration. The presence of GAC also provided an additional buffer, and allowed the reactor to handle spikes in concentration that were greater than 50% above the average concentration.

Labor for operation of the GAC-FBR is minimal. Less than one man-hour per day is required for making up nutrient feeds (weekly), and cleaning of pH probes and heat exchangers (monthly). These duties were assigned to the operator of the adjacent filtration plant, which pretreats the pinkwater for particulate removal.

The principal operation and maintenance costs are associated with the co-substrate (in this case, ethanol) used to promote anaerobic transformation of the nitrated compounds, the heat and nutrients added to maintain conditions favorable to the anaerobic bacteria, and energy for the fluidization pumps, influent pump, and feed solution pumps.

2.6 ADVANTAGES AND LIMITATIONS OF THE GAC-FBR

The major advantage of the GAC-FBR is that it removes the need to dispose of spent GAC as a by-product hazardous waste. It is also projected to cost less than the current treatment process. By using biodegradation (which is a destructive process) rather than adsorption as the removal mechanism, the carbon does not slowly accumulate the contaminant. In addition, the GAC-FBR can be used to treat compounds which are not readily adsorbable, but which are biodegradable. A military example of such a compound is Yellow D (ammonium picrate), which is too water-soluble to be well adsorbed. Another example (not specifically military) is glycol-based deicing fluids. The anaerobic GAC-FBR has been shown effective at treating deicing fluid at Albany International Airport (Albany, New York) in a full-scale system, which was selected as the most cost effective method from a number of alternatives.

The major limitation of the GAC-FBR is the need for secondary treatment of the effluent produced from munitions wastewater. The effluent will be a low-volume, relatively high concentration wastewater containing significant amounts of BOD and ammonia.

3.0 DEMONSTRATION DESIGN

3.1 PERFORMANCE OBJECTIVES

The primary objectives of the demonstration were to determine:

- The effectiveness of the technology in removing total nitrobodies (including TNT, RDX and HMX) from the pinkwater effluent stream;
- The relative ease of operation and reliability of the technology; and
- The cost-effectiveness and appropriateness of the technology for use at McAlester AAP and other DoD sites where similar wastewater effluents are generated.

The performance objectives and results for this demonstration are summarized in Table 2.

Table 2. Performance Objectives.

Parameter	Value	Units	Results
Flow Rate	7.5 or greater	gpm	6.0 achieved, limited by effluent pump capacity
Influent Range	20-80	mg/L total nitrobodies	Up to 100 mg/L treated successfully
Effluent Requirement	<0.1	mg/L total nitrobodies	Achieved 94% of time, met McAAP discharge limit 100% of time
Loading Rate	0.22	kg nitrobodies/m^3-d	Up to 0.30 achieved
Target Cost	10	$/kgal	$23.43/kgal, not achieved

The target cost assumed that there would be approximately the same concentration of nitrobodies during the demonstration as during pilot testing. The GAC-FBR, as well as straight GAC adsorption, is very dependent on the contaminant concentration. If the concentration of nitrobodies were to double, then the cost for both methods would increase. The GAC cost should roughly double, as should the usage rate for the GAC. It would be less than double for the GAC-FBR, because half of the cost arises from amortized capital costs, and the increase in concentration would only affect the usage of ethanol, nutrients and caustic (for pH control).

Another major factor in the increased cost was unexpected maintenance problems, which caused system shutdowns. Maintenance problems occurred with pumps, heater fuses, flow rate probes, and heat exchangers. These are commercial, off-the-shelf components. Fixing these problems would reduce the costs significantly.

Effectiveness was assessed by:

- TNT, RDX, HMX and total nitrobodies removal efficiency and volumetric removals rates (kg nitrobodies/m^3-d); and

- Mass ratio of primary substrate (ethanol) used per unit mass of total nitrobodies removed; and

- Overall cost-effectiveness of the Anaerobic GAC-FBR process versus GAC adsorption.

3.2 SITE SELECTION

The demonstration site was selected based on availability of pinkwater, availability of aerobic wastewater facilities to treat the effluent from the anaerobic GAC-FBR, and existence of pilot scale data to be used in the design of the system. McAAP met all of these requirements and was willing to participate in the demonstration. They had on-site chemical analysis of the contaminant characteristics operating as part of their monitoring program for their existing GAC adsorbers, and could provide most of the other analyses required.

3.3 FACILITY HISTORY AND MISSION

McAAP, a subordinate command to the Operations Support Command, has life cycle conventional management capabilities from design, production, storage, maintenance and demilitarization. Located on 45,000 acres in southeastern Oklahoma, McAAP has six ammunition production, maintenance, and renovation complexes, and is centrally located in the United States. Access is by major highway (Interstate 40 east and west; Highways 69 and 75 north and south), by rail (Union Pacific), and waterway (Ports of Muskogee and Catoosa, 60 to 75 miles north).

McAAP has four major mission areas or core competencies:

1) The Group Technology Center for production of high explosive and inert bombs.

2) A Tier 1 Depot responsible for storing and distributing training and war reserve ammunition critical to the first 30 days of a military conflict. McAAP has the largest explosive storage capacity in the United States with 2,267 explosive magazines.

3) A state-of-the-art maintenance and renovation facility for bombs, rockets, projectiles and propelling charges.

4) Conventional ammunition demilitarization. McAAP has two state-of-the-art autoclave facilities dedicated to resource recovery and recycling of obsolete or unserviceable munitions with a capability to demil up to 750-pound bombs.

Both load-assembly-and-pack operations and demilitarization of conventional munitions generate pinkwater. McAAP is one of five active installations producing pinkwater, and others are in standby mode. Pinkwater is the largest single hazardous waste stream produced in the industrial base.

3.4 PHYSICAL SET-UP AND OPERATION

The current pinkwater control process at McAAP starts with collection by vacuum trucks of pinkwater in sumps at the buildings from which it is generated. The trucks transport the pinkwater to a central influent basin, from which the existing treatment plant draws its influent. The first portion of the pinkwater treatment plant is essentially a conventional potable water treatment plant

using coagulation/flocculation, settling and pressure sand filtration to remove particulates from the pinkwater (Figure 2). The particle free pinkwater then passes through one of two GAC adsorbers which operate in parallel. McAAP monitors the effluent concentration of the GAC contractors, and when the concentration approaches the pre-treatment discharge limit of 1 mg/L TNT, the GAC is replaced.

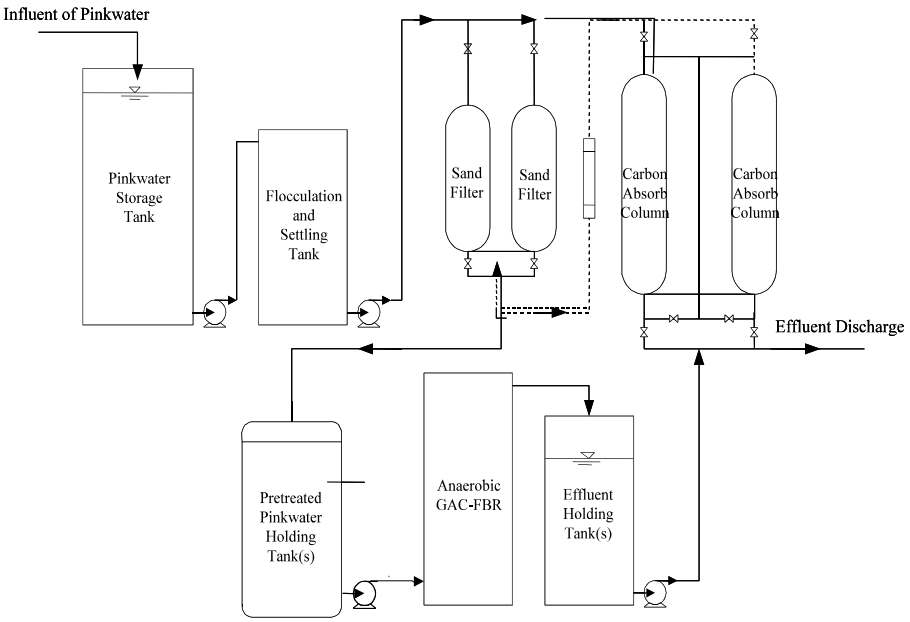

Figure 2. Pinkwater Treatment Facility at McAAP.

The anaerobic GAC-FBR system and how it was integrated with the current GAC adsorption system is also presented in Figure 2. Based on the average flow rate for the last two years, this demonstration scale system was expected to be able to treat all pinkwater generated. However, this is highly dependent on workload. The current system at McAAP was designed to operate at 30 gpm, and has been operated at flows up to 50 gpm, which is well beyond the capacity of the demonstration scale GAC-FBR. The demonstration system was installed such that the GAC system could be operated in parallel with the GAC-FBR.

The Anaerobic GAC-FBR system used in this demonstration consisted of a 4.5-foot diameter by 22-foot, tall epoxy-coated, carbon-steel reactor with a working volume of 1,900 gal (7,200 L). The reactor was insulated and attached to a 3-foot diameter media separation tank, and a self-contained, structural steel skid that contained all of the piping, pumps, electrical control panel, process monitors and controllers, and gas monitoring equipment. Electrical requirements of the system included a 100 amp, 460-volt, three-phase power supply.

The equipment for the demonstration was assembled and wet-tested off site. It was then shipped to McAAP and installed in conjunction with McAAP personnel. Temporary utilities installed for the technology demonstration included 100 amp, 3-phase 460-volt electrical service, and potable water for chemical feed preparation.

A simplified process flow diagram of the treatment system is presented in Figure 3. The influent pinkwater was pretreated for solids and wax removal using the existing flocculation/clarification and sand filtration systems (Figure 2). The pinkwater was then pumped to one of two (2) 20,000-gallon influent feed holding tanks. Water was withdrawn from these tanks through a heat exchanger, duplex basket strainer, and into the suction side of the fluidization pump. A constant flux rate was maintained in the fluidized bed by pumping a mixture of the influent (feed) and recycled treated water into a flow distribution system at the base of the reactor. The design fluidization flow rate for this reactor is 220 gpm, and the recycle ratio was targeted at approximately 28 to 1 for a feed rate of 7.5 gpm. The design hydraulic residence time was 6 hours. Electron donor (ethanol) was added on the discharge side of the fluidization pump. Reactor effluent flowed by gravity into a sealed separator tank used to capture any GAC media exiting the reactor. A diaphragm pump was used to draw settled mediawater from the bottom of the separator and return it back to the FBR.

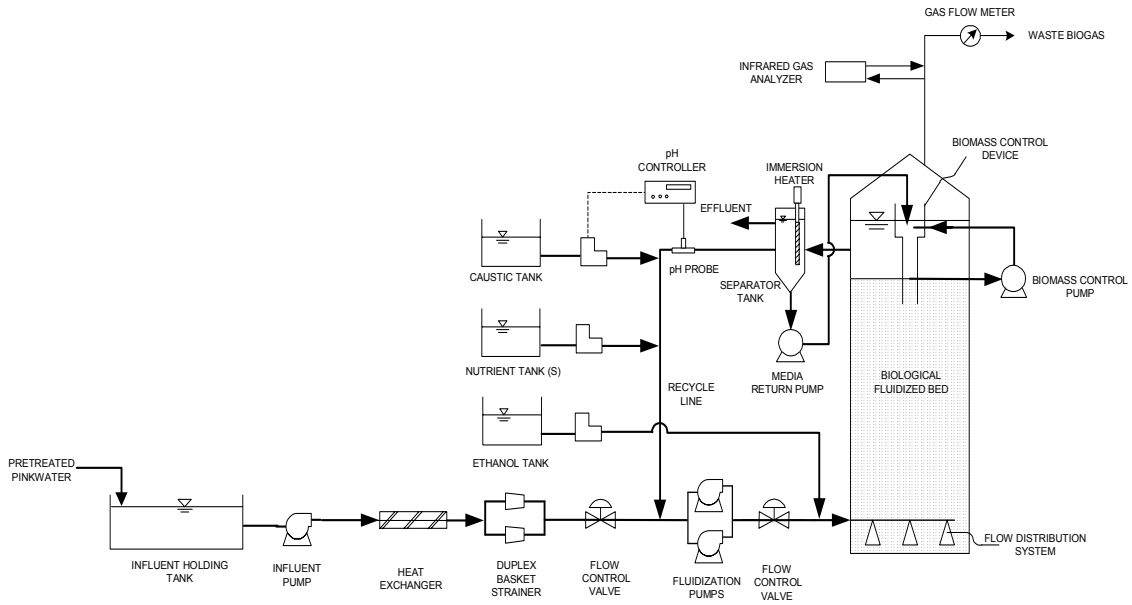

Figure 3. Simplified Process Flow Diagram of Anaerobic GAC-FBR Demonstration-Scale System at McAAP.

Effluent from the separator tank overflowed by gravity to a wastewater transfer tank, from which it was pumped to one of two (2), 20,000-gallon holding tanks. Water from the separator tank was withdrawn into a recycle line from a submerged port on the separator. A sidestream from the recycle line was pumped through a heat exchanger and back into the separator tank for temperature control, when necessary. A 28 kW heater provided hot water on the other side of the heat exchanger. Substrate (ethanol), nutrients and caustic were added to the recycle line downstream of the takeoff for the heat exchanger. The recycle line was monitored on-line for temperature and pH. A drop in temperature activated the sidestream for the heater loop, and a drop in pH activated the pump to add caustic to the system.

The biogas produced was preconditioned for moisture removal in a condensation or drip trap and then passed sequentially through a meter for gas production measurements. The biogas was then vented. A gas side-stream was withdrawn between the condensation trap and the gas meter, pumped through a dual infrared gas analyzer (for measuring CO_2 and CH_4), and returned to the biogas waste line.

A programmable logic controller (PLC) was used to monitor critical process parameters and control key functions such as pH and temperature. The PLC also contains a series of interlocks designed to switch the reactor to warm (recycle flow maintained) or cold (total) shutdown in the event of out-of-limits operations. This is to protect the reactor and biological system from damaging upsets, and to protect discharging wastewater with TNT above discharge limits. The PLC has the capability to store operational data for detailed evaluation. The PLC was connected with an autodial/autoalarm system that alerted on-call personnel to warm or cold shutdown conditions.

A nutrient solution containing nitrogen, phosphorus, and several trace minerals was dissolved in tap water in a 50-gallon nutrient storage tank. A second nutrient solution containing calcium and manganese salts was metered into the system separately to avoid precipitation of the phosphorus. Micronutrients not present in the wastewater were introduced to the system on a batch basis two-times per week. Table 3 lists the nutrients added in addition to nitrogen and phosphorus.

Table 3. Trace Nutrients and Minerals Added to System.

Component	Source
Magnesium	$MgCO_3 \cdot 6H_2O$
Manganese	$MnSO_4$
Potassium	KCl
Calcium	$CaCl_2 \cdot 2H_2O$
Iron	$FeCl_3 \cdot 6H_2O$
Cobalt	$CoCl_2 \cdot 6H_2O$
Nickel	$NiCl_2 \cdot 6H_2O$
Boron	H_3BO_3
Copper	$CuCl_2$
Molybdenum	$NaMoO_4 \cdot 2H_2O$
Sulfur	MnSO4

Ethanol was used as the added electron donor for this demonstration. Adjustments were made to the ethanol feed pump to control the applied organic loading rate (OLR) to the reactor. The demonstration system was installed in May 2001, and started up in July 2001. The system was operated and evaluated from then until August 2002.

3.5 SAMPLING, MONITORING AND ANALYTICAL PROCEDURES

The Anaerobic GAC-FBR system was monitored daily by the plant operator, and the results were recorded on a daily inspection sheet. In addition, the operator took samples in accordance with the sampling plan. The sampling frequency, preservation methods, analytical methods, and references are presented in Table 4. The methods selected for analysis were based primarily on Standard Methods for the Examination of Water and Wastewater (AWWA, 1992), and EPA's Test Methods for Evaluation Solid Waste (EPA, 1996). These are referred to by specific number designation of the method in Table 4, where the AWWA publication is listed as "Std. Method ...," while the EPA manual is listed as EPA Method. These methods are commonly used for analysis of pinkwater and biological wastewater throughout the Army, and the tests for pinkwater constituents are used to monitor compliance at McAAP, as specified in their permit from the Oklahoma Department of

Environmental Quality. In addition, the existing Trickling Filter Plant, to which the effluent from the Anaerobic GAC-FBR was discharged, was monitored two times per month for BOD, ammonium and phosphate to document the impact, if any, of the treated pinkwater effluent on the final discharge water quality from McAAP.

Table 4. Sampling Plan and Protocols.

Parameter	Frequency	Preservation	Holding Time	Sample Size and Container	Method Type	Reference
Aqueous Phase Samples						
pH	daily	None	N/A	N/A	in-line pH probe	Manufacturer's Instructions
Temperature	daily	None	N/A	N/A	in-line thermocouple	Manufacturer's Instructions
RDX, TNT, DNT, HMX, and reduced by-products of TNT, RDX, and HMX	2 X/wk				HPLC	EPA Method 8330
Volatile Fatty Acids	2 X/wk	Filter, 1 drop H_3PO_4	28 days	2ml vial	direct injection GC-FID	
COD	1 X/wk	4°C, pH<2, H_2SO_4	28 days	HDPE	Colorimetric	Standard Method 5220
BOD	2 X/wk	4°C	48 hours	1 Liter - HDPE	Incubation/ DO Measurement	Standard Method 5210
Ammonia	1 X/wk	4°C, pH<2, H_2SO_4	28 days	HDPE	Selective Ion Electrode	Standard Method 4110B
Total Kjeldahl Nitrogen	Periodic	4°C, pH<2, H_2SO_4	28 days	HDPE	Distillation	Standard Method 4500-Norg
Phosphorus	1 X/wk	4°C, pH<2, H_2SO_4	28 days	HDPE	Colorimetric/Ion Chromatography	Manufacturer's Instructions/ Standard Method 4110B
Sulfate	Periodic	Filter, Cool 4°C	28 days	HDPE	Ion Chromatography	Standard Method 4110B
TSS	2 X/wk	Cool 4°C	7 days	HDPE	Filter, dry, weigh	Standard Method 2540D
VSS	2 X/wk	Cool 4°C	7 days	HDPE	Filter, dry, weigh, loss on ignition	Standard Method 2540E
Gas Phase Samples						
Methane	daily	N/A	N/A	N/A	in-line infrared detector	Manufacturer's Instructions
Carbon Dioxide	daily	N/A	N/A	N/A	in-line infrared detector	Manufacturer's Instructions
Gas Production	daily	N/A	N/A	N/A	in-line liquid displacement	Manufacturer's Instructions

4.0 PERFORMANCE ASSESSMENT

4.1 PERFORMANCE DATA

The primary performance objectives for the demonstrated technology are the effectiveness in removing total nitrobodies from the effluent stream, the relative ease of operation and reliability of the system, and the cost-effectiveness of the technology for use at McAAP and other DoD sites where similar wastewater effluents are generated.

The anaerobic GAC-FBR system was effective in removing nitrobodies from the effluent. The influent and effluent concentrations of TNT, RDX, and TNB are shown below in Figures 4, 5, and 6. The analytical data are shown in Appendix A.

The mass ratio of ethanol to TNT was set based on pilot data previously developed. During the demonstration, the applied mass of ethanol to TNT was 17. The amount of ethanol added would be changed automatically by changing the influent TNT concentration on the PLC controller to maintain the 17:1 ratio. This mass ratio proved successful for the demonstration.

The average loading rate, the key indicator of capacity for this system, was 0.13 kg of energetics/ m^3/day. This compares with the design loading rate of 0.22 kg/m^3/day, developed using McAAP's 7.5 gpm average flow rate of pinkwater, and 38.7 mg/L average concentration. The reasons for the actual rate being lower than design include the system downtime due to operational problems and the concentration of energetics in the pinkwater being below target for 37% of the demonstration period.

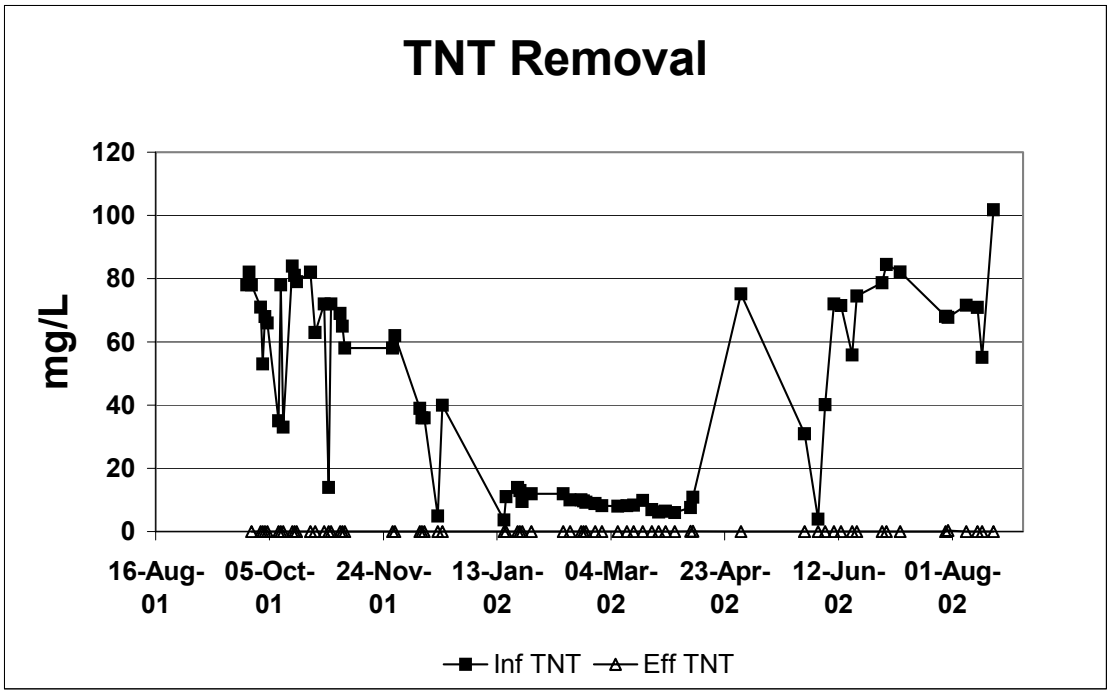

Figure 4. TNT Removal.

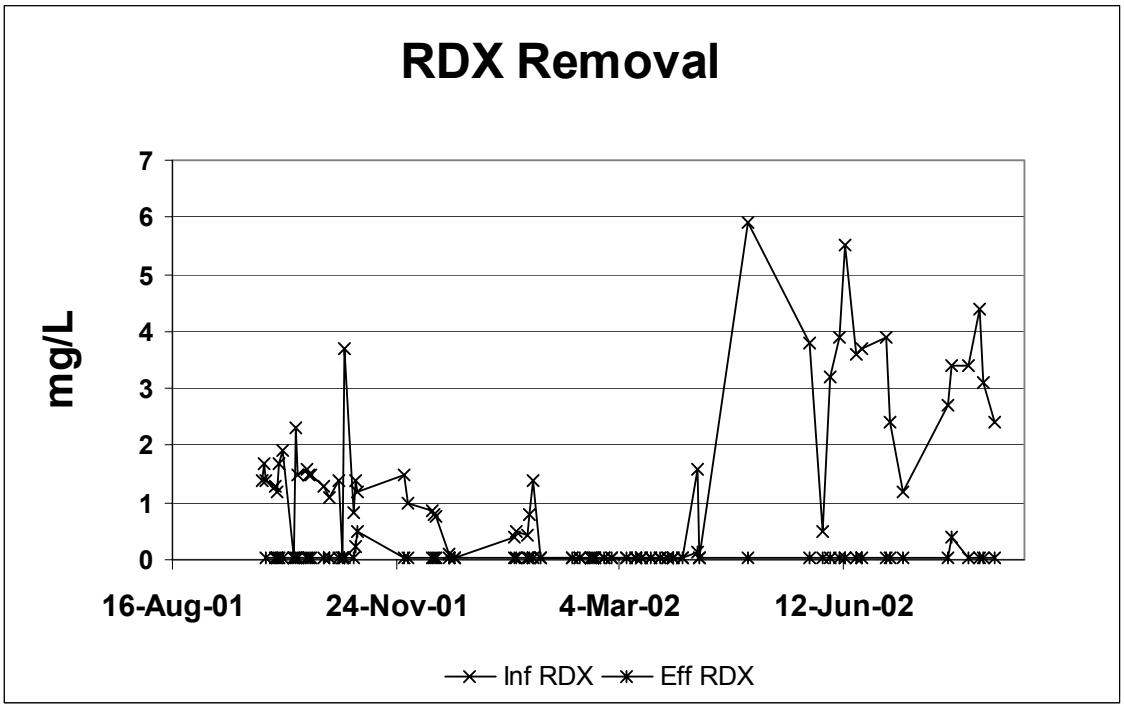

Figure 5. RDX Removal.

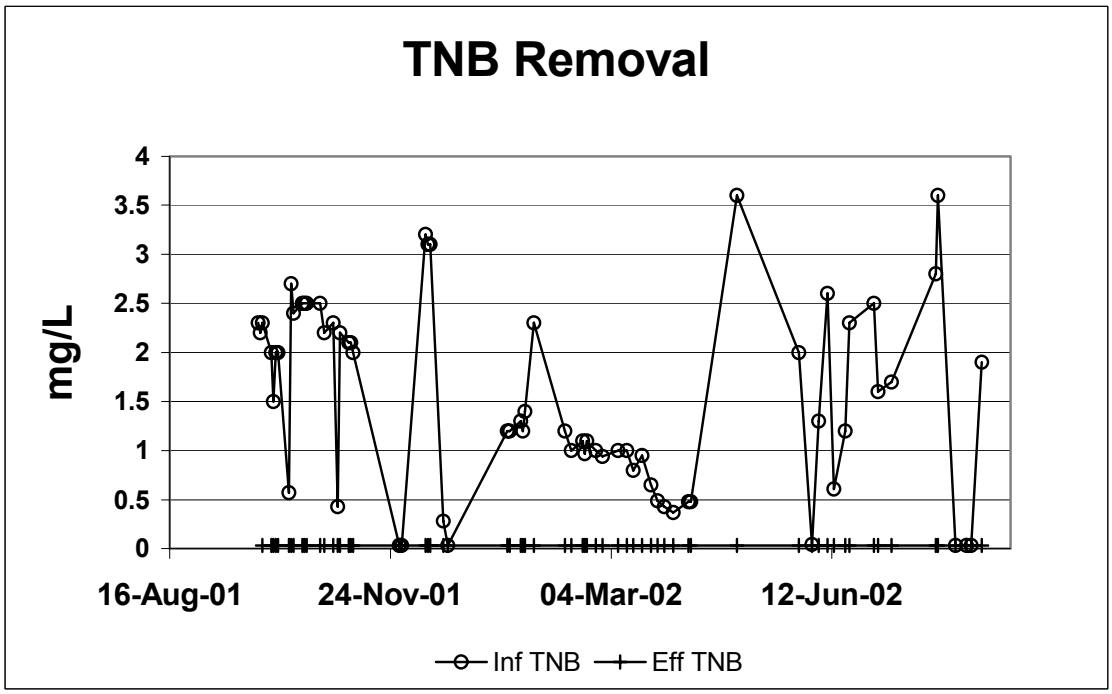

Figure 6. TNB Removal.

As shown on the figures, the technology was effective in removal of nitrobodies. In every sampling event, total nitrobodies were removed to below McAAP's criterion of <1 ppm. In 64 of 68 sampling events, total nitrobodies were removed to below detection limits (<0.03 mg/L), assuring that the level was below 0.1 mg/L, which would meet the most stringent criteria of any DoD facility generating pinkwater.

The GAC-FBR process used a fundamentally different mechanism for the removal of explosive contaminants from wastewater. Rather than a transfer mechanism such as adsorption, biodegradation was the removal mechanism. Nutrients and co-substrates were added to the system to provide effective biodegradation, and the wastewater resulting from the GAC-FBR contained nutrients and biomass that do not arise from the current treatment technology.

Although the nutrients and biomass represent additional regulated contaminants in a wastewater discharge permit, they were easily handled by the existing aerobic wastewater treatment plant. At ODEQ's request, nutrients were monitored in the effluent of the pretreatment to determine the increased load on the wastewater treatment plant. These contaminants were measured as biochemical oxygen demand and ammonia nitrogen.

An analysis of BOD and nutrient effluent from the demonstration GAC-FBR was conducted to determine the potential effect of additional nutrient loading on the existing wastewater treatment plant. The pilot plant effluent had an average effluent BOD of 390 mg/L, with a maximum of 1,250 mg/L. Based on a discharge of 7.5 gpm, the BOD loading would increase by 35 lbs/day for a treatment plant receiving pinkwater with a concentration of 40 mg/L. This works out to approximately 10 lbs BOD per lb nitrobodies removed.

A similar analysis was conducted on the pilot plant ammonia data. The average ammonia concentration in the effluent of the pilot reactor was 31 mg/L, and the maximum was 47 mg/L. This would increase the ammonia load by 2.8 to 4.3 lbs/day at the treatment plant.

In the case of McAAP, these loadings would increase the concentration at the plant by 15 mg/L BOD, and 1.2 to 1.8 mg/L of ammonia. Currently, McAAP's wastewater treatment is significantly underloaded, and these additional contaminants did not pose a problem. In general, this analysis would have to be performed on a plant-by-plant basis, because the relative flow rates of the GAC-FBR, and the overall plant would dictate the increase in concentration. The effect can also be estimated using the ratios of BOD and ammonia to TNT removed.

4.2 PERFORMANCE CRITERIA

The primary performance criterion was to treat the pinkwater produced at McAAP to discharge levels required in their National Pollutant Discharge Elimination System (NPDES) permit, which requires <1 mg/L TNT at the effluent from the pretreatment system. The goal was to maintain total nitrobodies below 100 g/L, as required for discharge at many other Army industrial facilities. The performance criteria are listed in tabular form in Table 5.

Table 5. Performance Criteria

Performance Criteria	Description	Primary or Secondary
Hazardous Contaminant	Total Nitrobodies, to include TNT, RDX, HMX, and TNB	Primary
Process Waste	Biological wastewater, including BOD, nutrients and excess biomass sheared from the GAC	Primary
Factors Affecting Technology Performance	Flow rate–was tightly controlled, but capacity exists in design to test 7.5 gpm (design) to 11.25 gpm Contaminant concentration–varied widely and caused fluctuations in the volumetric mass loadings Spill Events–possibility to see system stressed Temperature and pH–both controlled by system automation	Primary Primary Secondary Secondary
Reliability	System designed to switch to "warm shutdown" when temperature, pH or liquid levels operate outside prescribed ranges	Secondary
Ease of Use	System designed for automatic operations. Operators required only to fill nutrient and co-substrate tanks. Part of test was to demonstrate that full time operators are not needed.	Primary
Versatility	System can be used for other nitrated organics such as propellant wastewater containing DNT. System is in use elsewhere for deicing fluid treatment, and is being tested elsewhere for fire fighting foam treatment.	Secondary
Maintenance	Routine maintenance included nutrient and co-substrate reservoir replenishment, and checking pH and temperature against automatic readings. This was performed in conjunction with operation of the adjacent pressure filtration plant which precedes the GAC.	Primary
Scale-Up Constraints	Operation was with near full-scale equipment. The only major constraint for larger systems would be use of parallel fluidized beds, so that half of the plant could be turned off for any large scale maintenance while half continues to operate. This increases the reliability of the plant for the system and this design approach has already been successfully used at Albany (NY) Airport to treat de-icing fluid run-off.	Secondary

4.3 DATA ASSESSMENT

Performance of the GAC-FBR was monitored in parallel with the existing plant, using the same sampling and analysis methods as currently accepted by ODEQ for compliance reporting at McAAP. All methods used are based on Standard Methods for the Analysis of Water and Wastewater (AWWA, 1998), or EPA Method 8330 (USEPA, 1996), except for continuous measurement devices used for pH, temperature, methane, carbon dioxide and gas production. The methods have been

described previously in Table 4. The performance and measurement metrics and results are shown in Table 6.

Table 6. Performance and Performance Confirmation Methods.

Performance Criteria	Expected Performance (pre demo)	Performance Confirmation Method	Actual (post demo)
Primary Criteria (Qualitative)			
Ease of Use	Same skill level as filter plant operator	Experience from demo	Additional troubleshooting required due to separator location
Primary Criteria (Quantitative)			
Cost	<$19K/year	Cost of Consumables	$7.5K @ 5 gpm
Influent Stream - Flow Rate - Influent Conc.	7.5 gpm or greater 20-80 mg/L total nitrobodies	EPA Method 8330	Flow rates of up to 7.5 gpm tested. Maximum sustained rate of 6.0 gpm achieved Influent nitrobodies concentrations up to 100 mg/L were effectively treated.
Target Hazardous Contaminant	< 100 g/L total nitrobodies	EPA Method 8330	Met criteria 94% of time with no samples exceeding McAAP limit (1 mg/L)
Process Waste	Wastewater suitable for discharge to aerobic wastewater treatment plant (400 mg/L BOD, 45 mg/L ammonia)	No adverse effect in existing WWTP	Criteria met - No measurable change in influent at existing WWTP after combination with other sources
Maintenance	Limited to reservoir replenishment during steady state operation	Observation and log book entries	Additional maintenance required due to separator and heater problems
Secondary Performance Criteria			
Spill Events	Depends on spill[1]	Rapid recovery of gas production from bacteria	No spill events occurred
Temperature and pH	Chemical and power use as predicted from pilot test	Comparison of usage to predictions	Use as predicted
Reliability	Operation without automatic shutdown periods	Observation from PLC logs	Separator and heater problems interfered with operations

[1] Spills do not refer to shock loadings. Influent TNT at the saturation limit does not pose a problem. Spills refer to other chemicals which may get into the pinkwater sumps. No known spills were experienced during the pilot test, and no spills were simulated.

The system did not require additional personnel above that required for operation of the existing GAC adsorption system but, due to a few problems with system design and failures of selected hardware, additional operational, supervisory and maintenance time was required.

The primary design problem was the location of the separator. In prior installations of this technology, the separator has been located adjacent to the top of the reactor. For this installation,

the separator was located near ground level on the equipment skid, which was located inside a building. This was done to protect all controls and sensors from exposure to the weather, but created unforeseen hydraulic problems. A PLC-controlled, pneumatically actuated valve had to be added into the line between the reactor and separator, and appropriate control logic had to be developed. Even with this modification, changes in flow rates caused a change in the overall water inventory requiring the PLC to reestablish stable control. This caused numerous unintended shutdowns as the system hit control limits for high or low water levels in the separator. This one factor delayed startup by approximately two months, and was the cause of most of the problems with the system. Additionally, the heating system used to maintain the water in the system at 95°F required significant maintenance. The electrical controls for this heater failed twice during the demonstration. The problem appeared to have been solved by reprogramming the control logic to reduce the cycling frequency. Problems were also encountered with an insertion flow meter probe, and with two of the pumps. All these problems with control systems contributed greatly to the additional manpower requirements, and associated increased costs experienced in this demonstration.

The cost effectiveness of this technology is explored in detail in Section 5 of this report.

4.4 TECHNOLOGY COMPARISON

The data developed was compared to the historical data for the GAC adsorbers at McAAP. This included an analysis of the pattern of flow volume that occurred during the demonstration. The flow and concentration yielded a mass of carbon that was removed, and this mass was then used to predict how much GAC would have been required. The four most recent years for which detailed data exist indicated that the use of GAC was fairly constant at about 64,000 pounds per year.

4.5 PROCESS RELIABILITY

Biological systems require maintenance of activity that is not required of physico-chemical treatment processes such as adsorption onto GAC. One of the major concerns with the use of biological systems is their response to upsets such as temporary disruptions, contaminant concentration variability, and system shutdowns. An unexpected side effect of the numerous shutdowns caused by the control systems during this demonstration project was the exposure of this anaerobic biosystem to many severe upsets.

The system was designed with air nozzles at the base of the reactor column to aid in resuspension of the bed after it settles, due to a complete shut down. These nozzles would allow the operator to blow any carbon out of the flow distribution system, as well as break up the bed where biomass has grown together. Despite the numerous shut downs, the bed was easily refluidized just by restarting the system.

In a separate incident, a problem with temperature control allowed the fluidized bed to reach a temperature of 134°F. Although this is far in excess of normal operation, the biomass recovered immediately after the temperature was lowered to below 100°F.

The ability of this system to recover from these shocks demonstrated a system reliability suitable for an industrial operation.

5.0 COST ASSESSMENT

5.1 COST REPORTING

This cost assessment consists of two separate methods: 1) a straight forward comparison of cost avoidance for GAC purchase and disposal, versus operating costs for the anaerobic GAC-FBR plus amortized capital costs for the GAC-FBR; and 2) a more detailed comparison based on the Environmental Cost Analysis Methodology (ECAM) Handbook. The major difference is that ECAM incorporates many costs which would be incurred identically by either system, such as maintenance of Material Safety Data Sheets, environmental health and safety training, environmental management plan maintenance, and NPDES reporting requirements. For both analyses, no amortized cost is associated with the GAC system, as it is already in place. Also, the operator of the GAC system would also be used for the anaerobic GAC-FBR, so no additional personnel are required. The operating experience for this demonstration required some additional supervisory and maintenance time due to the problems generated by the separator location, and the control equipment failures. In comparison, the operating experience with the anaerobic GAC-FBR used to treat de-icing fluid runoff at Albany International Airport (New York) indicates that the very little labor is involved, due to the high degree of automation in the system.

The baseline cost for GAC adsorption was based on the average quantity of GAC used during the four years leading up to 1999. The average quantity was then multiplied by the 1999 purchase and disposal cost (a lump sum). This resulted in a baseline annual GAC cost for the existing system of $71,000. In addition, manpower is needed to remove and replace GAC in the columns, and place the spent GAC in drums for disposal. McAAP estimated that removing, replacing and drumming GAC from one column requires 37.5 man hours. The GAC usage rate for McAAP was approximately 64,000 lbs per year, which require 14 changeouts at 4,500 lbs GAC per column. The labor cost for 14 changeouts is estimated to be (based on 37.5 hours per changeout at $68.24/hr) $35,800, making the total annual cost for GAC adsorption $106,800. Separate estimates for purchase and disposal of GAC were not made.

The actual costs were captured for operating the anaerobic GAC-FBR. The operational costs are shown in Table 7.

The largest material cost is for ethanol, and the locally available source at McAAP for ethanol was much higher than elsewhere. The local cost of $3.47/gal could be reduced by as much as 70% if fuel grade ethanol can be purchased in bulk, lowering the overall operational costs for the GAC-FBR to as low as $60,900 per year.

Table 7. Operational Costs for the Anaerobic GAC-FBR.

Item	Cost Calculation Basis	Annual Cost
Ethanol ($3.47/gallon)	6.95 gpd @ $3.47/gal (local market cost)	$8,800
Temperature Control	1.7 x 106 btu per day (average)	$2,400
Nutrients	Urea (N) 72 lb/month @ $.25/lb Diammonium phosphate (P) 28 lb/month @ $0.99/lb Trace Metals at $25/month	$850
pH Control	480 gallons of 20% NaOH (for the year) @ $1.74/gal	$840
Labor	744 hour annually, based on actual experience @ $68.24/hr (fully loaded)	$50,770
Power	Fluidization Pump @ 7.5 hp Growth Control/Media Control @ 0.5 hp Nutrient Feed Pump @ 0.25 hp Caustic Feed Pump @ 0.25 hp Ethanol Feed Pump @ 0.25 hp	$3,400 ($0.06/kwh)
Total		$67,060

As stated above, the ECAM approach includes many activities that are required equally for the adsorption system and the anaerobic GAC-FBR. These costs are included in Tables 8 and 9 below, which compare the existing system and proposed system, respectively. The total estimated operating costs are approximately $67,060 per year, using the higher local market cost of ethanol. The anaerobic GAC-FBR process was assessed with the annualized actual labor costs experienced during the demonstration. It should be noted that the operator time was an allocation of the time expended by the existing pinkwater plant operators, and that no additional personnel were required. It is anticipated that operation of the existing plant requires approximately the same level of effort as the GAC-FBR, and the sampling and analysis efforts would be the same for either system. There is no cost for operator time in the analysis of the existing system, thus giving the worst possible comparison of the two.

While there is no breakdown available to separate installation costs from maintenance costs, the majority of these costs were associated with the addition of an enclosure to protect the equipment and operators from the weather. Much of the remaining maintenance costs were associated with the separator and heater problems previously discussed, and would not reoccur at other installations. The total $290,000 for unit purchase, installation, and maintenance has been treated as capital cost for this analysis. The amortized capital cost (6%, 20 years) for the GAC-FBR is $25,300 per year. Thus, the total yearly cost for the GAC-FBR was approximately $92,360, about 86% of the current cost of the GAC adsorption system, while the annual operating cost of the GAC-FBR was about 63% of the current cost.

Table 8. ECAM Analysis for Current GAC Absorption System.

Activity	Driver	Quantity	Unit Cost	Annual Cost
Equipment Amortization	Capital Cost	0	$0	$0
Raw Materials (GAC replacement and disposal)	Pinkwater Flow and Concentration	1	$71,000	$71,000
Utilities	Heat and Pumps	0	$0	$0
Labor (GAC changes only)	Number of Hours	525	$68	$35,826
Compliance audits	Number of Waste Streams[1]	1	$800	$800
Documentation Maintenance	Number of Waste Streams	1	$300	$300
EHS Training and Supplies	Number of Workers[2]	2	$3,530	$7,059
Environmental Management Plan Maintenance	Number of Waste Streams	1	$200	$200
Reporting Requirements (NPDES)[3]	Number of Waste Streams	1	$2,457	$2,457
Test/Analyze Waste Streams	Man hours for Analysis	16	$68.24	$1,092
Sample Waste Streams	Man hours for Sampling and Transporation[4]	416	$68.24	$28,388
Total				$147,122

[1]Assumes one day audit based on verbal communication with CERL Compliance Team.
[2]Assumes operator and chemist take 40-hour course.
[3]Assumes three hours per month.
[4]Assumes two hours for sample and transport, four times per week.

Costs have not been estimated for replacement of the GAC in the anaerobic GAC-FBR, because operating experience has not shown the need to replace GAC lost to attrition. This experience comes from both laboratory experiments, were reactors where operated from more than 1.5 years, and from the full-scale system at Albany International Airport that has operated for over three years. It is possible that some carbon may be lost to attrition, but it will require many years of operating experience. The current price estimate to replace all the carbon in the anaerobic GAC-FBR would be approximately $3,000.

The cost of operating the sewage treatment plant is also not included. McAAP estimates total annual cost for operating the sewage treatment plant as $150,000. The loading from this proposed process did not effect the operation of the existing sewage treatment plant.

Table 9. ECAM Analysis for Proposed Alternative Process – Anaerobic GAC-FBR.

Activity	Driver	Quantity	Unit Cost	Annual Cost
Equipment Amortization	Capital Cost	1	$25,300	$25,300
Raw Materials (Ethanol, nutrients, pH control)	Pinkwater Flow and Concentration	1	$10,490	$10,490
Utilities	Heat and Pumps	1	$5,800	$5,800
Labor	Number of Hours	744	$68	$50,770
Compliance audits	Number of Waste Streams[1]	1	$800	$800
Documentation Maintenance	Number of Waste Streams	1	$300	$300
EHS Training and Supplies	Number of Workers[2]	2	$3,530	$7,059
Environmental Management Plan Maintenance	Number of Waste Streams	1	$200	$200
Reporting Requirements (NPDES)[3]	Number of Waste Streams	1	$2,457	$2,457
Test/Analyze Waste Streams	Man hours for Analysis	46	$68.24	$3,139
Sample Waste Streams	Man hours for Sampling and Transporation[4]	416	$68.24	$28,388
Total				$134,703

[1]Assumes one day audit based on verbal communication with CERL Compliance Team.
[2]Assumes operator and chemist take 40-hour course.
[3]Assumes three hours per month.
[4]Assumes two hours for sample and transport, four times per week.

5.2 COST ANALYSIS

Operating the GAC-FBR to meet lower effluent concentrations as may be applied in the future should not increase the cost significantly, because the design here uses 27 mg ethanol per mg TNT removed, which is far in excess of the stoichiometric relationship required to reduce all of the nitro groups on the TNT. Concurrent work ongoing at CERL is showing complete reduction of all TNT with ratios under 1 mg ethanol to 1 mg TNT. This work also suggests that the ethanol concentration can be reduced after stable operation is achieved. The current limit of detection of TNT in wastewater is 30 µg/L, and this demonstration showed that the GAC-FBR could consistently keep the effluent concentration below the detection limit, as long as the temperature was maintained.

The cost drivers for the anaerobic GAC-FBR are labor, amortization of the equipment, and ethanol cost, in that order. The amount of labor required for the anaerobic GAC-FBR, once the operational problem caused by the separator location and heater installation are resolved, is expected to be comparable to slightly less than the labor required for the current system, but this is highly dependent on the number of carbon changeouts required for the current system. If the concentration of the contaminants in the pinkwater were to decrease dramatically, the labor for changeouts would also decrease dramatically, but the operating labor for the anaerobic GAC-FBR would not decrease proportionately. Conversely, if the concentration were to remain high, the labor for changeouts would increase proportionally, while the labor for the GAC-FBR would stay relatively constant. Again, in this analysis, the actual reported cost for labor for operating the GAC-FBR was included, whereas the labor for daily operation of the current GAC adsorption system was not. No new operators were required to run the GAC-FBR system during this demonstration.

The cost per 1,000 gallons treated has been estimated based on the direct cost comparison including labor at the treatment works. The GAC-FBR is estimated to cost $23.43/kgal (based on annual cost of $92,360 for 7.5 gpm), whereas the GAC is estimated to cost $27.09/kgal (based on annual cost of 106,800 for 7.5 gpm). These do not include several of the costs shown in the ECAM, because the training, NPDES reporting and record maintenance are related not just to the pinkwater plant, but are related, to all wastes generated at the plant. By assigning all of these costs to the pinkwater plant operation, a conservatively high treatment cost was obtained.

5.3 COST COMPARISON

The anaerobic GAC-FBR technology has significantly lower operating expenses for operation at McAAP. Higher flow rates and concentrations of energetics favor this technology over GAC adsorption. The technology meets the same effluent limits as the current GAC adsorption process and does generate a marginal increase in BOD and ammonia loading on existing secondary treatment plants. These two issues were addressed with ODEQ prior to initiation of this demonstration. Analytical results met expectations, and ODEQ's concerns were met such that no additional permit parameters would be required. Implementation of this technology is thus dependent on site-specific factors, and on the production schedule for each site.

This page left blank intentionally.

6.0 TECHNOLOGY IMPLEMENTATION

6.1 COST OBSERVATIONS

Key factors that affected costs for this project include the capital cost of the anaerobic GAC-FBR system, installation and maintenance costs, labor to operate the system, and material costs, primarily for ethanol, the primary substrate supporting the system biology. The project had several costs not expected to affect future installations. These included costs for: (1) temporary tankage to isolate the feed and effluent waters for the process to facilitate batch analysis and to ensure compliance with discharge limits, and (2) unexpectedly high maintenance costs due to problems with the separator design and with failure of several control systems. The installation and maintenance costs were included in the capital cost calculations, resulting in a higher amortized capital cost than would be expected in future installations.

6.2 PERFORMANCE OBSERVATIONS

The technology has proven itself throughout this demonstration. The anaerobic GAC-FBR system was operated at loadings as high as 0.30 kg of nitrobodies removed/m^3-d, while meeting the most stringent effluent limit of 100 µg/L of total energetics. This loading rate is well above the design rate of 0.22 kg/m^3-d. The process effluent only marginally increased BOD and ammonia loadings on the existing secondary water treatment facility and did not cause any upsets. The system experienced numerous changes in contaminant concentration throughout the demonstration, and consistently met effluent limits. Additionally, the system restarted without significant or permanent degradation of capacity after each unintentional shutdown period.

Except for the problems generated by the location of the separator on a lower hydraulic gradient than the reactor, and by the failures of several control system components, the system was able to be operated by the existing pinkwater plant operators, with relatively little system-specific training. The operations problems noted above did require some additional operator and supervisory support as well as additional maintenance support. These problems are well documented and easily fixed for new installations. Additionally, the system currently at McAAP can be retrofitted to correct these problems.

6.3 SCALE-UP

The system used for this demonstration is a full-scale system designed to handle McAAPs average load for the past four years. The same basic design and control technology can be used to build a larger system or, for greater flexibility, a second system could be installed in parallel with the demonstration system. This later approach was used at the Albany County Airport installation. As discussed above, both the capital and operating costs for higher capacity units do not increase directly with capacity, whereas the operating costs for GAC adsorption systems do increase directly with increased capacity requirements.

If the capacity of the anaerobic GAC-FBR at McAAP were tripled by the addition of another reactor, to more closely match the capacity of the pressure filtration plant, the increase in BOD and ammonia would also triple. This would mean that the BOD at the plant influent could increase from its current 30 mg/L to 75 mg/L. This is still well within the capacity for a conventional wastewater

treatment plant, which is usually designed for municipal effluent that has a BOD concentration of 200 mg/L (Metcalf and Eddy, 1979). Ammonia may be increased by up to 5.4 mg/L, which would also be well within the concentrations for conventional wastewater (25 mg/L). Ammonia is not always found in the current wastewater treatment plant influent, and had a maximum of 2.9 mg/L during the pilot test.

6.4 END-USER ISSUES

McAAP has been a full partner throughout this demonstration. Their existing pinkwater plant operators have been operating the system since start-up, with minimal additional training required. The operational problems discussed above have required additional supervisory assistance as well as consultation with vendor personnel. Correction of the design problems would correct the operational difficulties experienced and simplify operation. By comparison, a much larger anaerobic GAC-FBR, using the same control technology, at the Albany County Airport operates without a dedicated operator.

McAAP currently plans to continue operating the demonstration system due to their current high pinkwater generation rate. However, the problems with the control systems (pumps, heaters, and analytical probes) will have to be addressed before the operators are comfortable with the system. There are currently seven other Army Ammunition Plants which generate pinkwater or spent GAC. This process may be applicable to any of these installations, which include Bluegrass AAP, Crane AAA, Hawthorne AAP, Iowa AAP, Kansas AAP, Lone Star AAP and Milan AAP. This system may also be applicable to Radford AAP for propellant wastewater. It would be important that these installations have conventional secondary wastewater treatment plants, and access via sewer lines to the plants. Each installation would have to be judged separately to determine whether the anaerobic GAC-FBR would be applicable to it.

6.5 APPROACH TO REGULATORY COMPLIANCE AND ACCEPTANCE

Pinkwater is a regulated hazardous waste listed as K044 (wastewaters from munitions production). It is regulated by the Oklahoma Department of Environmental Quality (ODEQ) at the current pretreatment discharge point, with an allowable discharge of 1 mg/L. No new permitting was required as the anaerobic GAC-FBR technology met the existing pretreatment limit

This demonstration showed that anaerobic GAC-FBR technology can meet the 100 µg/L limit for total nitrobodies in existence at other locations. This more stringent criteria was used to qualify the technology for more general use through the Army industrial base.

6.6 LESSONS LEARNED

The location of the separator at a different hydraulic grade than the fluidized bed introduced several problems to the operation of the system. A modulating valve was required to maintain the liquid level in the reactor and keep the separator tank from overflowing when the recycle shut down. This had to be maintained in balance with the water level in the separator, because the recycle pump, at 220 gpm, could rapidly empty the recycle tank during a restart. These problems would not have occurred if the separator and reactor were at the same hydraulic grade line, as there would be no line with unsteady flow remaining in the system.

The problems with the insertion flow meter were unexpected, and could be overcome by the use of another type of meter, such as a magnetic flowmeter. The main reason the flow meter generated problems was related to apparently low flow readings, which would suggest a problem with the recycle pump. However, the bed remained fluidized during the demonstration, indicating that the flow meter was becoming fouled in such a way as to provide low readings.

This page left blank intentionally.

7.0 REFERENCES

1. Adrian, N. R. and K. Sutherland (1998), "RDX Biodegradation by a Methanogenic Enrichment Culture Obtained from an Explosive Manufacturing Wastewater Treatment Plant," USACERL Technical Report 99/16.

2. AWWA, *et al*, (1998), Standard Methods for the Examination of Water and Wastewater 20th Edition, American Public Health Association, Washington, D.C.

3. Bruhn, C., L. Lenke and H. J. Knackmuss (1987), "Nitrosubstituted Aromatic Compounds as a Nitrogen Source for Bacteria," *Applied and Environmental Microbiology*, v53, p208.

4. Dept. of the Army, (1995), "Directorates of Public Works Annual Summary of Operations - Volume III - Installations Performance, Fiscal Year 1995, U. S. Army Center for Public Works.

5. Hwang, P., T. Chow, and N.R. Adrian, (2000), "Transformation of TNT to Triaminotoluene by Mixed Cultures Incubated under Methanogenic Conditions," *Environmental Toxicology and Chemistry* 19, 836-841.

6. IT Corporation (1996), "Treatment of Propellant Production Wastewaters Containing 2,4 Dinitrotoluene," Report Number SFIM-AEC-ETD-CR-95048, U.S. Army Environmental Center.

7. Maloney, S. W., E. G. Engbert, M. T. Suidan and R. F. Hickey, (1998), "Anaerobic Fluidized Bed Treatment of Propellant Wastewater," S. W., *Water Environment Research*, v70, N1, p52.

8. Maloney, S. W., N. R. Adrian, R. F. Hickey, and R. L. Heine, (2002), "Anaerobic Treatment of Pinkwater in a fluidized Bed Reactor Containing GAC," *Journal of Hazardous Materials*, v92, p77-88.

9. Maloney, S. W., R. L. Heine, R. Rajan and R. F. Hickey, "Demonstration of the Anaerobic Fluidized Bed Reactor for Pinkwater Treatment at McAlester Army Ammunition Plant," ERDC/CERL Technical Report, Draft 2002.

10. Metcalf and Eddy, Inc., (1979), Wastewater Engineering: Treatment, Disposal and Reuse, McGraw-Hill, Inc., New York, NY, p64.

11. National Defense Center for Environmental Excellence, "Environmental Cost Analysis Methodology," http//:www.ndcee.ctc.com/ecam/0730-991.doc.

12. Spain, J. C. (1995), "Biodegradation of Aromatic Compounds," *Annual Review of Microbiology*, v49, p523.

13. Spanggord, R. J., J. C. Spain, S. F. Nishino and K. E. Mortelmans (1991), "Biodegradation of 2,4-Dinitrotoluene by Pseudomonas sp.," *Applied and Environmental Microbiology*, v57, p3200.

14. VanderLoop, S. L., M. T. Suidan, M. A. Moteleb, and S. W. Maloney (1998), "Two-Stage Biotransformation of 2,4,6-trinitrotoluene under Nitrogen-Rich and Nitrogen-Limiting Conditions," *Water Environment Research*, v70, n2, p189.

15. VanderLoop, S. L., M. T. Suidan, M. A. Moteleb, and S. W. Maloney (1999), "Biotransformation of 2,4-dinitrotoluene under different electron acceptor conditions," *Water Research*, v33, n5, p1287.

16. U.S. Environmental Protection Agency (1996), "Test Methods for Evaluating Solid Waste: Volume 1B: Laboratory Manual, Physical/Chemical Methods," Office of Solid Waste and Emergency Response, SW-846, Method 8330.

APPENDIX A

POINTS OF CONTACT

Point of Contact (Name)	Organization (Name & Address)	Phone/Fax/E-mail	Role in Project
Dr. Stephen W. Maloney	U.S. Army Engineering Research and Development Center P.O. Box 9004 (FEDEX: 2902 Farber Drive) Champaign, IL 61826-9005 (FEDEX Zip 61822)	217-373-3482 217-373-3430 s-maloney@cecer.army.mil	Point of Contact/ Contracting Officer's Technical Representative
Ms. Kellena D. Daigle	MBI International 3900 Collins Road Lansing, MI 48910	517-336-4607 517-337-2122 daigle@mbi.org	Contractor Authorized Representative
Mr. Robert L. Heine	MBI International 3900 Collins Road Lansing, MI 48910-8396	517-336-3683 517-337-2122 heine@mbi.org	Project Engineer
Mr. Scott F. Sullivan	McAAP ATTN: SIOMC-EM 1 C Tree Road McAlester, OK 74501-9002	918-420-7254 918-420-6467 sullisf@mcalestr-emh3.army.mil	McAAP Lead Contact Environmental Management

This page left blank intentionally.

APPENDIX B

ENERGETICS ANALYSIS

Date	TNT (mg/L)		RDX (mg/L)		TNB (mg/L)	
	Influent	Effluent	Influent	Effluent	Influent	Effluent
9/25/2001	78		1.4		2.3	
9/26/2001	82		1.7		2.2	
9/27/2001	78	0.03	1.4	0.03	2.3	0.03
10/1/2001	71	0.03	1.3	0.03	2	0.03
10/2/2001	53	0.03	1.2	0.03	1.5	0.03
10/3/2001	68	0.03	1.7	0.03	2	0.03
10/4/2001	66	0.03	1.9	0.03	2	0.03
10/9/2001	35	0.03	0.03	0.03	0.57	0.03
10/10/2001	78	0.03	2.3	0.03	2.7	0.03
10/11/2001	33	0.03	1.5	0.03	2.4	0.03
10/15/2001	84	0.03	1.6	0.03	2.5	0.03
10/16/2001	81	0.03	1.5	0.03	2.5	0.03
10/17/2001	79	0.03	1.5	0.03	2.5	0.03
10/23/2001	82	0.03	1.3	0.03	2.5	0.03
10/25/2001	63	0.03	1.1	0.03	2.2	0.03
10/29/2001	72	0.03	1.4	0.03	2.3	0.03
10/31/2001	14	0.03	0.03	0.03	0.43	0.03
11/1/2001	72	0.03	3.7	0.03	2.2	0.03
11/5/2001	69	0.03	0.83	0.03	2.1	0.03
11/6/2001	65	0.03	1.4	0.22	2.1	0.03
11/7/2001	58	0.03	1.2	0.48	2	0.03
11/28/2001	58	0.03	1.5	0.03	0.03	0.03
11/29/2001	62	0.03	1	0.03	0.03	0.03
12/10/2001	39	0.03	0.87	0.03	3.2	0.03
12/11/2001	36	0.03	0.79	0.03	3.1	0.03
12/12/2001	36	0.03	0.75	0.03	3.1	0.03
12/18/2001	4.9	0.03	0.09	0.03	0.28	0.03
12/20/2001	40	0.03	0.03	0.03	0.03	0.03
1/16/2002	3.7	0.03	0.38	0.03	1.2	0.03
1/17/2002	11	0.03	0.49	0.03	1.2	0.03
1/22/2002	14	0.03	0.42	0.03	1.3	0.03
1/23/2002	13	0.03	0.8	0.03	1.2	0.03
1/24/2002	9.5	0.03	1.4	0.03	1.4	0.03
1/28/2002	12	0.03	0.03	0.03	2.3	0.03
2/11/2002	12	0.03	0.03	0.03	1.2	0.03
2/14/2002	10	0.03	0.03	0.03	1	0.03
2/19/2002	10	0.03	0.03	0.03	1.1	0.03

APPENDIX B (continued)

ENERGETICS ANALYSIS

Date	TNT (mg/L)		RDX (mg/L)		TNB (mg/L)	
	Influent	Effluent	Influent	Effluent	Influent	Effluent
2/20/2002	9.7	0.03	0.03	0.03	0.97	0.03
2/21/2002	9.3	0.03	0.03	0.03	1.1	0.03
2/25/2002	8.9	0.03	0.03	0.03	1	0.03
2/28/2002	8.2	0.03	0.03	0.03	0.94	0.03
3/7/2002	8	0.03	0.03	0.03	1	0.03
3/11/2002	8.2	0.03	0.03	0.03	1	0.03
3/14/2002	8.4	0.03	0.03	0.03	0.8	0.03
3/18/2002	9.9	0.03	0.03	0.03	0.95	0.03
3/22/2002	6.9	0.03	0.03	0.03	0.65	0.03
3/25/2002	6.2	0.03	0.03	0.03	0.49	0.03
3/28/2002	6.4	0.03	0.03	0.03	0.43	0.03
4/1/2002	6	0.03	0.03	0.03	0.37	0.03
4/8/2002	7.6	0.09	1.6	0.12	0.48	0.03
4/9/2002	10.9	0.1	0.03	0.03	0.48	0.03
4/30/2002	75.2	0.03	5.9	0.03	3.6	0.03
5/28/2002	30.9	0.03	3.8	0.03	2	0.03
6/3/2002	3.9	0.03	0.51	0.03	0.04	0.03
6/6/2002	40.1	0.03	3.2	0.03	1.3	0.03
6/10/2002	72	0.03	3.9	0.03	2.6	0.03
6/13/2002	71.5	0.03	5.5	0.03	0.61	0.03
6/18/2002	55.9	0.03	3.6	0.03	1.2	0.03
6/20/2002	74.5	0.03	3.7	0.03	2.3	0.03
7/1/2002	78.7	0.03	3.9	0.03	2.5	0.03
7/3/2002	84.5	0.03	2.4	0.03	1.6	0.03
7/9/2002	82.1	0.03	1.2	0.03	1.7	0.03
7/29/2002	68.1	0.03	2.7	0.03	2.8	0.03
7/30/2002	67.7	0.37	3.4	0.41	3.6	0.03
8/7/2002	71.6	0.03	3.4	0.03	0.03	0.03
8/12/2002	70.9	0.03	4.4	0.03	0.03	0.03
8/14/2002	55.1	0.03	3.1	0.03	0.03	0.03
8/19/2002	101.8	0.03	2.4	0.03	1.9	0.03

ESTCP Program Office

901 North Stuart Street
Suite 303
Arlington, Virginia 22203

(703) 696-2117 (Phone)
(703) 696-2114 (Fax)

e-mail: estcp@estcp.org
www.estcp.org