CP-1038

Check Off
BS ____
JM ____
RH ____

LA-UR-00 - 4479

*Approved for public release; distribution is unlimited.*

*Title:* DEVELOPMENT OF NON-THERMAL PLASMA REACTOR TECHNOLOGY FOR CONTROL OF ATMOSPHERIC EMISSIONS: FINAL REPORT FOR SERDP PROJECT CP-1038

*Author(s):* L. A. Rosocha, LANL, P-24
H.R. Snyder, LANL, P-24
A.W. Miziolek, M.J. Nusca, and R.G. Daniel
US Army Research Laboratory
J.-S. Chang, K. Urashima, and P.C. Looy
McMaster University
J.T. Herron and R.E. Huie
National Institute for Standards & Technology

*Submitted to:* Strategic Environmental Research and Development Program (SERDP) - Final Report

**Los Alamos**
NATIONAL LABORATORY

Los Alamos National Laboratory, an affirmative action/equal opportunity employer, is operated by the University of California for the U.S. Department of Energy under contract W-7405-ENG-36. By acceptance of this article, the publisher recognizes that the U.S. Government retains a nonexclusive, royalty-free license to publish or reproduce the published form of this contribution, or to allow others to do so, for U.S. Government purposes. Los Alamos National Laboratory requests that the publisher identify this article as work performed under the auspices of the U.S. Department of Energy. Los Alamos National Laboratory strongly supports academic freedom and a researcher's right to publish; as an institution, however, the Laboratory does not endorse the viewpoint of a publication or guarantee its technical correctness.

Form 836 (8/00)

# Development of Non-Thermal Plasma Reactor Technology for Control of Atmospheric Emissions: Final Report for SERDP Project CP-1038

L.A. Rosocha
Principal Investigator
H.R. Snyder
Project Collaborator
Los Alamos National Laboratory

A.W. Miziolek
Co-Principal Investigator
M.J Nusca and R.G. Daniel
Project Collaborators
Army Research Laboratory

J.-S. Chang
K. Urashima and P.C. Looy
Project Collaborators
McMaster University

John T. Herron and Robert E. Huie
Project Collaborators
National Institute for Standards and Technology

September 18, 2000

**Acknowledgment:** This work was supported by the U.S. Department of Defense, through the Strategic Environmental Research and Development Program (SERDP).

# Development of Non-Thermal Plasma Reactor Technology for Control of Atmospheric Emissions: Final Report for SERDP Project CP-1038

## Outline


Executive Summary

Project Objectives and Goals

Technical Approach

Field-Pilot Demonstration at Tinker Air Force Base
- Introduction
- Test Setup
- Equipment Descriptions
- CRS NTP Reactor System Operating Principles and Conditions
- Emission Conditions for a Cruise Missile Engine Test Cell (CMTC)
- Summary Description of Major Tasks for Emissions-Reduction Field Tests
- Summary Results from Field Tests

Economics Based on NTP de-$NO_x$ System Scale and Duty factors

Conclusions

Recommendations for Future Work

Acknowledgments

References

Figures

# Development of Non-Thermal Plasma Reactor Technology for Control of Atmospheric Emissions: Final Report for SERDP Project CP-1038


## Principal Performing Organizations:

Los Alamos National Laboratory
Louis A. Rosocha
Principal Investigator

Army Research Laboratory
Andrzej W. Miziolek
Co-Principal Investigator

National Institute for Standards and Technology
John T. Herron
Project Collaborator

McMaster University
J.-S. Chang
Project Collaborator


## Executive Summary


Incentives for implementing new pollution-control technologies for oxides of nitrogen ($NO_x$) and hazardous air pollutants (HAPs), including volatile organic compounds (VOCs), are both regulatory and economic. Of immediate concern, given considerable regulatory pressure, e.g., the promulgation of a NESHAPS (National Emissions Standard for Hazardous Air Pollutants) for $NO_x$ emissions in CY 2000, new de-$NO_x$ technologies are necessarily being explored. This project has emphasized evaluations of non-thermal plasma (NTP) technologies for treating jet-engine test facility exhaust and other hazardous air pollutants (HAPs. The removal of nitric oxide (NO) has been the primary focus of our work, with a secondary focus on HAP removal, should regulations on these substances become more stringent or conventional technologies for their removal fail to perform adequately. This report will describe our technical activities and results for the completion of the project, with emphasis on work carried out since the December 1999 Annual Report.

A Memorandum of Agreement (MOA) was established in March 1999 with Tinker Air Force Base (AFB) to test an NTP de-$NO_x$ unit on one of their small jet engine test facilities – a Cruise Missile Test Cell (CMTC). We also forged a team with Tinker and their collaborators, the Air Force Center for Environmental Excellence (AFCEE) and URS-Radian International Corporation (the gas sampling and analysis contractor for the test). Tinker AFB helped to

support the project at their site, interfacing the NTP-unit activities with CMTC operations, and also paid for associated gas sampling and analysis work that was contracted through AFCEE to Radian. The field demonstration was necessary to provide further data and operating experience to more fully evaluate performance and economic projections for NTP de-$NO_x$ technology and to provide data and experience for designing larger systems with more confidence.

We evaluated various design options for NTP reactor systems for the field-pilot demonstration on Cruise Missile Test Cell (CMTC) exhaust at Tinker AFB and downselected to a corona radical shower (CRS) reactor system, developed by our partners at McMaster University, for the field-pilot unit. Since the 1999 Annual Report, final iterations on the design of individual components for the field-pilot equipment, obtaining bids for the fabrication of components, getting the NTP system equipment fabricated and installed in a 20-foot trailer, transporting the equipment trailer to the test site, and executing the field tests have been our main activities. Among the major items completed were the fabrication of the main CRS reactor and its enclosures and acquiring and installing the reactor power supplies, the electrostatic filter elements, catalytic converters, and the variable-speed fan used to draw exhaust gas through the system, the gas ductwork, and the data acquisition system.

This report will concentrate on preparations for and the execution of the small-pilot-scale field demonstration on $NO_x$ removal carried out at Tinker Air Force Base during March 27 – April 4, 2000. In these tests, a small amount (< 1%) of the total CMTC effluent normally exhausted to the atmosphere was ducted through the NTP-based gas-processing system. Earlier project work has been described in several other reports and publications.

The field tests at Tinker AFB show promising results for some system operating conditions. The CRS NTP reactor uses a large collection of fine nozzles, connected to a source of high voltage, to inject a mixture of air and dilute ammonia ($NH_3$)/nitrogen ($N_2$) into the portion of the CMTC exhaust-gas stream sampled by the plasma reactor. The combination of non-thermal plasma formed at the nozzle tips using the injection gas functions to produce active species for de-$NO_x$ (e.g., O-atoms, N-atoms, NH radicals, etc.). NO in the presence of O-atoms is rapidly converted into $NO_2$ (de-NO but not de-$NO_x$). In the presence of $NH_3$ and the plasma, conversion of total $NO_x$ ($NO + NO_2$), actual de-$NO_x$, takes place. Because the concentration of NO in the CMTC exhaust was quite low (< 10 ppm), a bank of automotive catalytic converters was placed after the CRS reactor in the field-pilot system. The purpose of this bank was to further promote de-$NO_x$ (conversion of $NO_2$ to $N_2$) in the presence of a catalyst (and facilitated by entrained hydrocarbons in the gas stream that are activated by the plasma). For larger-scale jet engine test cells (JETCs), where the NO concentration is ~ 50 ppm, such a catalyst bank is not necessary. In the field tests, 70-100% de-NO normally was achieved because the CRS reactor was operated primarily under oxidizing conditions. For some cases (main gas flow rate < 80 $Nm^3/h$), the combination of radical chemistry, reaction with $NH_3$, and reactions in the catalytic bank resulted in conditions for which 65-80% total de-$NO_x$ was achieved.

High de-$NO_x$ values were limited to a flow rate range up to about 80 $Nm^3/h$, instead of our originally-planned main gas flow rate of 120 $Nm^3/h$ because of the number of catalytic converters placed in series with the CRS reactor. We have discovered that, to achieve high de-

$NO_x$ up to 120 $Nm^3/h$, six catalytic converters, rather than the four we used, would be required. However, the field test demonstrated that the CRS reactor was doing its job – the high de-$NO_x$ performance was just limited by the treatment-flow capacity of the catalytic converters. Also, we ran the catalytic converters without any external heating. External heating would have allowed an increase in catalytic treatment-flow capacity but would have added to the operating energy requirements of the system.

Analysis of residues in the reactor in the CRS NTP system inlet and outlet filters showed a significant change in the amount of sulfate and nitrate compounds collected. Sulfates, as expected, were very low because there is little sulfur present in the JP-10 engine fuel. However there was a change in collected nitrate compounds from about 18 $\mu g/cm^2$ at the inlet to about 64 $\mu g/cm^2$ at the outlet electrostatic filter. This implies that the system is indeed converting $NO_x$ into nitrate compounds, a desirable effect we had intended to demonstrate.

In addition, scale-up of de-$NO_x$ systems was studied and cost analyses and economic assessments for various NTP reactor systems compared to conventional selective catalytic reduction (SCR) - wet scrubber technology were carried out. These indicated that NTP technology is cost-competitive for jet-engine exhaust de-$NO_x$. In particular, we have estimated costs that can be compared with earlier-reported NTP Jet Engine Test Cell (JETC) de-$NO_x$ systems. In this report, we also present the total annual cost of JETC de-$NO_x$ systems as a function of the operating scale (i.e., the exhaust-gas flow rate). The cost per unit mass of $NO_x$ removed (in $/ton NO) also has been calculated, depending on system scale (flow rate) and duty factor (total operating time per week or year), and shown in the report. The economic analyses provide a basis for selecting the most appropriate de-$NO_x$ system technology for a given DoD application.

## Project Objectives and Goals

Our overall project objective was to evaluate and develop new technology, namely non-thermal plasma (NTP) reactor technology for DoD air emissions control applications. A key goal was to provide a basis for selecting the most appropriate NTP technology for DoD applications. To do so, we would evaluate the performance of prototype and pilot-scale NTP reactors (corona, dielectric barrier, electron beam) and assist in the commercialization of the technology. $NO_x$ abatement has been our primary focus, while HAP and specialized VOC control has been a secondary focus (should other technologies prove inadequate or emissions standards become more stringent). These goals were to be met by: 1) formulation of a predictive, reactor simulation model for use in prototype development and scale-up; 2) experimental verification of the modeling results; and 3) formulation of engineering scaling and optimization criteria and the application of these to the demonstration of scaleable laboratory-pilot and field-pilot reactors. The development of an efficient $NO_x$ processor was a key goal. A comparison with conventional technologies (relative costs and benefits) was also an important goal.

## Technical Approach

To meet our technical objectives, we planned a four-year effort starting with technology assessment and laboratory evaluation tests, progressing through laboratory-pilot equipment optimization and scaling, and culminating in the development of NTP technology selection criteria, which are based upon both historical and new field-pilot testing. In the first year a comparative assessment of electric-discharge driven and electron-beam driven NTP reactors was to be performed, reaction kinetic models were to be developed, and experiments for issue resolution were to be designed. In the second year reactor scaling criteria and optimization models were to be developed and scaling studies initiated with laboratory-pilot apparatus. In the third year reactor scale-up, optimization, and system engineering were to be completed to the point of starting the design of a field-pilot unit, that unit being focused on the removal of oxides of nitrogen ($NO_x$) from air emissions streams. The fourth year has concentrated on completing the design of the field-pilot unit, constructing and testing the unit at a selected DoD site (Tinker Air Force Base) and providing criteria for selecting the most appropriate NTP technology for DoD applications. The field-pilot reactor was meant to approach a practical scale device (an order of magnitude scale-up in flow capacity from a bench-scale unit; i.e., flow rate in the 100 $Nm^3/hr$ range). In a practical, higher-flow application, one would use several scaled-up reactors in parallel to treat the exhaust gases from an emissions source.

The comparative assessment work has built upon a 1995 National Institute for Standards and Technology (NIST) workshop on NTP applications to air pollution control and considerable progress made in the field since then. NIST and one of their affiliates was tasked to assist in plasma chemistry model development and the evaluation of reaction-chemistry parameters. Reactor performance measurements have been carried out using combustion gas analyzers (CGAs), GC/MS (gas chromatography/mass spectrometry), TDL (tunable diode laser) and LIF (laser-induced fluorescence) probes, with ARL taking the lead on optical/laser measurements. ARL has also carried out CFD (computational fluid dynamics) calculations to predict and optimize fluid flow patterns and treatment residence times in a planar-flow, dielectric-barrier NTP reactor. Los Alamos has focused on electric discharge physics, electrical drive circuit

engineering and optimization, and the design and construction of laboratory bench-scale and scaled-up field-demonstration reactors. McMaster University has been contracted to ARL to assist in reactor evaluations and testing, economic assessments, and pilot-unit design. Earlier SERDP work, EQ (Environmental Quality) work, and the NIST and McMaster University collaborations have fed into this project from its inception.

The results related to the above work have been described in our 1998 and 1999 Annual Reports and references therein [1, 2], as well as many other previously submitted project reports and published papers.

At the start of this project, study was completed to give a snapshot of the state-of-the-art for NTP technology as applied to air emissions control at that time (1996). That study drew from and cited most of the available key literature on the subject. Based on the information available then, the study presented an overview of NTP processing for air emissions applications, pointed out the major types of reactors considered appropriate for the DoD applications of concern, provided an initial comparison of different types of reactors, and identified the issues to be addressed and the methodology to be employed in pursuing the project objectives. The following summary observations and conclusions were presented in it:

- NTP-based devices have been initially demonstrated for several emissions-control applications; however, present experience has shown that each different NTP reactor (e.g. pulsed corona, barrier discharge, e-beam, etc.) has unique characteristics with respect to target gas destruction, electrical efficiency, and propensity for toxic byproduct formation, depending on its design and electrical characteristics.
- Electric-discharge driven NTPs are emerging as potentially very attractive candidates for $NO_x$ and HAP/VOC emission control due to the relative simplicity and potential flexibility of the NTP reactors, which are scaleable to high gas flow rates with banks of reactors in parallel.
- Electron-beam driven NTPs seem quite attractive due to the efficient production of energetic electrons. However, their applicability for treating relatively small flows of contaminated air is questionable due to the present high cost of e-beam equipment. The development of smaller and lower-cost e-beam sources is not a present reality and further work is still required in developing long-life, vacuum-gas separation windows. The treatment of large-scale $NO_x/SO_x$ flue-gas emissions dates back almost 20 years with electron-beam systems. In spite of this maturity, commercial equipment is not yet available and issues still remain with vacuum foils, commercial acceptance, and overall system costs.
- Over the past several years, flue-gas treatment with pulsed corona reactors has been demonstrated at reasonably large pilot-plant scales. An analogous situation to electron-beam systems exists: although demonstrating promise, the technology is not yet commercially available and practical issues such as the development of industrially-robust, fast-pulse electrical switchgear still are not resolved. Pulsed corona reactors also inherently produce very low specific pump power (power per unit volume of process gas), making them a reasonable match for $NO_x$ processing, but underpowered by at least one or two orders of magnitude for VOC processing with reasonably compact reactors.

- Dielectric-barrier reactors produce active species (e.g., radicals) with energy efficiencies similar to pulsed corona reactors, but lower than electron-beam reactors. However, the specific pump power of barrier reactors typically surpasses that of pulsed corona by one to three orders of magnitude. Although an established technology for ozone generation for a century, barrier reactor technology for $NO_x$ and VOC processing has evolved to the small pilot plant scale only during the past five years.
- At present, all forms of NTP processing are relatively high in energy consumption, which has a strong effect on system economics. Therefore, their field of target applications naturally divides into two regimes: 1) low flow rate with a wide range of contaminant removal; 2) high flow rate with a low degree of contaminant removal. Given the current state-of-the-art, pulsed corona and barrier reactors will most likely be commercialized for low flow rate $NO_x$ and VOC service within a relatively short time (e.g., two years). However, significant advances in the scientific and technological understanding of NTPs is required to develop optimized, large-scale (high flow rate) practical systems.
- A future development that shows promise for dramatic economic improvements is the concept of staged, hybrid systems. Two possibilities are an absorber that can trap $NO_x$ or VOCs at a high flow rate and be regenerated off-line at more economical conditions; or a low-removal NTP reactor in series with an absorber, which can make a major change in the regeneration-disposal economics of the absorber subsystem.

Many of these observations and conclusion still hold true at this time. However, information not available at the time of the study was the concept of hybrid NTP reactors like the corona radical shower (CRS) device (that is described later in this report) and test results using it for de-$NO_x$.

New literature on NTP de-$NO_x$ was reviewed as it became available, laboratory measurements and modeling studies on NTP-initiated $NO_x$ removal were carried out, and experiments aimed at adsorber-NTP hybrid systems were also done. We have confirmed our ideas that tailored adsorber flush gases can produce improved de-$NO_x$ results; one case with $N_2$/Ar mixtures has definitely shown reductive-mode (conversion to $N_2$ and $O_2$) de-$NO_x$ [3].

Scaled-up systems have been studied and cost analyses and economic assessments for various NTP reactor systems compared to conventional selective catalytic reduction (SCR) - wet scrubber technology have been completed. These studies indicate that NTP technology is cost-competitive for jet-engine exhaust de-$NO_x$. In particular, we have estimated costs that can be compared with earlier-reported NTP JETC de-$NO_x$ systems.

## Field-Pilot Demonstration at Tinker AFB

### Introduction

This project has always planned for a field-pilot demonstration because it was determined to be necessary for providing further data and operating experience to more fully evaluate economic and performance projections for NTP de-$NO_x$ technology and to design larger systems with confidence. Because it was expected that the criteria pollutant $NO_x$ would become much more stringently regulated in the near future and DoD jet-engine test facilities emitting considerable

quantities of $NO_x$ typically have no pollution control equipment (they have been regulatorily 'grandfathered' as mobile sources), our work has focused on $NO_x$ emissions control, with a secondary focus on other hazardous air pollutants. In November 1998, a technical white-paper report, "Initial Designs of Electric-Discharge Non-Thermal Plasma Field-Pilot Demonstration Units for $NO_x$ Removal In Jet-Engine Exhaust: White paper for SERDP Project CP-1038" [4], on initial equipment-design options for a field-pilot demonstration was completed.

In that report, four candidate NTP reactor design concepts (pulsed corona, dielectric barrier, NTP-adsorber, and corona radical shower) were evaluated for the field-pilot demonstration on jet-engine exhaust de-$NO_x$. The report discussed the exhaust stream to be addressed, the test setup, the four candidate reactor systems, and projected operating parameters and specifications for a field-pilot unit. Because the cost and logistics of using an electron-beam NTP reactor are, respectively, too high and too complicated for this project, we limited our candidate systems to those based on electric-discharge-driven NTP reactors, which previous economic analyses have shown to be more cost effective (e.g., see the reports "De-$NO_x$ Cost Estimates in Units $/Ton $NO_x$ Removed", Los Alamos National Laboratory (September 1999) [5] and "Final Report: Semi-Pilot Plant Test for Non-Thermal Plasma Reactors – Electrostatic Precipitator System for Control of $NO_x$ Released During Army and Related U.S. Department of Defense (DoD) Operations", McMaster University (December 1999) [6].

Realizing the performance and economic shortcomings of stand-alone NTP reactors, some workers in this discipline (particularly this project team) have proposed the use of staged or hybrid systems to better match particular air-emissions control applications. Initial evaluations of staged hybrids show promising performance and economics. However, rigorous pilot-plant tests are required to provide further data and operating experience to more fully evaluate economic and performance projections and to extrapolate designs to full-scale units. The demonstration of a small-scale, field-pilot unit directed toward scale-up has been a key goal of this project and a key goal in providing the DoD with further information in providing a basis for selecting the most appropriate NTP technology for a given emissions-control application.

Taking the above opinions and economic assessments into account, it was decide to downselect to a corona radical shower staged hybrid system for the field-pilot demonstration unit. This was done even though a pulsed corona system showed a slight cost advantage over the CRS system. Justification for this choice was based on three key points:

- Promising results for achieving high de-$NO_x$ and relatively high yield (amount of $NO_x$ removed per unit of energy consumed) were demonstrated in laboratory experiments;
- Compared to pulsed corona, a CRS system is much more amenable to $NH_3$ addition and the subsequent generation of dry particulates, rather than the production of liquid acids (nitric and nitrous);
- CRS systems operate with a relatively simple DC power supply, which is both less complicated and less expensive than the modulator power supply required for a typical pulsed corona system.

Details of the equipment for our CRS system will be discussed further below.

A Memorandum of Agreement (MOA) was established in March 1999 with Tinker Air Force Base (AFB) to test an NTP de-$NO_x$ unit on one of their small jet engine test facilities – a Cruise Missile Test Cell (CMTC). A team was also forged with Tinker and their collaborators - the Air Force Center for Environmental Excellence (AFCEE) and URS-Radian International Corporation (the gas sampling and analysis contractor for the test). Tinker AFB helped to support the project at their site, interfacing the NTP-unit activities with CMTC operations, and also paying for associated gas sampling and analysis work that was contracted through AFCEE to Radian.

Since the 1999 Annual Report, final iterations on the design of individual components for the field-pilot equipment, obtaining bids for the fabrication of components, getting the NTP system equipment fabricated and installed in a 20-foot trailer, transporting the equipment trailer to the test site, and executing the field tests have been our main activities. Among the major items completed were the fabrication of the main CRS reactor and its enclosures and acquiring and installing the reactor power supplies, the electrostatic filter elements, catalytic converters, the variable-speed fan used to draw exhaust gas through the system, the gas ductwork, and the data acquisition system.

This sections that follow will concentrate on discussions of preparations for and the execution of the small-pilot-scale field demonstration on $NO_x$ removal carried out at Tinker Air Force Base during March 27 – April 4, 2000. Because of size and operational flexibility considerations, we decided to use a CMTC for conducting the demonstration. In these tests, a small amount (< 1%) of the total CMTC effluent normally exhausted to the atmosphere was ducted through the NTP-based gas-processing system.

**Test Setup**

Figure 1 below shows a schematic diagram of the field-test setup. In this arrangement, a small portion of the emissions stream that is actually discharged to the atmosphere (through the exhaust plenum room and chimney) was processed by the NTP system. A centrifugal fan was used to draw exhaust gas into the test reactor system. Because we originally planned on handling only a slipstream of 100-500 SCFM (59-294 $Nm^3/h$) capacity, no deleterious back-pressure effects on the engine were envisioned. The CMTC exhaust slipstream was collected using a nominal 8 in (20 cm) diameter galvanized steel pipe inserted approximately 3 ft (0.9 m) down into the top of the main exhaust chimney. The collected exhaust was then carried to the CRS NTP system trailer through about 75 ft (23 m) of insulated, plastic-lined, air-handling ductwork.

The on-line gas analysis equipment sampled the exhaust gas at the inlet to the CRS system and either at the outlet of the CRS reactor or further downstream of the reactor and catalytic converter bank (before the centrifugal fan). Additionally, analysis of byproduct liquids (if any) and particulate effluents were to be performed through other, off-line analytical techniques. The analytical techniques and results are described in detail in the Radian gas sampling and analysis report [7]. Figure 2 is a photograph showing the plasma-processor equipment trailer positioned

in the field next to a CMTC chimney at Tinker AFB. The flexible exhaust-collection duct and gas-sampling lines are clearly seen in the photo.

**Equipment Descriptions**

Figure 3 shows a schematic diagram of the CRS/NTP demonstration system. As discussed earlier in this report, we have chosen to employ a hybrid system, consisting of a corona radical shower (CRS) NTP reactor plus a catalyst bank and electrostatic filters (to capture any particulate/solid de-$NO_x$ treatment products). Also mentioned earlier is the fact that a catalytic-hybrid architecture is required because of the necessity of handling the very low NOx concentrations (< 10 ppm) in cruise missile engine exhaust; the catalysts most likely will not be required for JETCs, which have $NO_x$ concentrations of order 50 ppm. The field equipment is a significant scale-up in flow capacity (an order of magnitude – 120 $Nm^3/h$ versus 12 $Nm^3/h$) from the existing McMaster lab-scale system. The original system design was provided by McMaster personnel and major modifications later carried out by Los Alamos personnel. The length of the system that is housed within the equipment trailer is approximately 18 ft (5.5 m).

The test system consists of a nominal 8 in diameter (21.1 cm ID) inlet pipe, inlet filter, CRS NTP reactor and associated DC power supply, a parallel bank of four automotive catalytic converters, an exhaust-filter bank, an induced-flow fan, and the gas-handling ductwork elements which connect various parts of the system together. Most system elements are constructed of aluminum, except for the injection-gas manifolds and associated nozzles (stainless steel), the actual filter elements (composite foam or fiberglass), and the catalytic-converter housings (steel).

The inlet pipe is connected to the flexible duct that brings the collected exhaust from the CMTC chimney and delivers it to the CRS reactor. The inlet filter is an ordinary residential fiberglass furnace filter, modified to fit inside the pipe. This filter is intended to capture carbon particles (soot) entrained in the engine exhaust gas.

The CRS NTP reactor consists of six parallel-flow channels, each measuring 10 cm wide x 60 cm high x 125 cm long. The flow channels are made from aluminum and are arranged side-by-side in parallel. Aluminum housings are on the top and bottom of the channel array. The bottom housing is connected to a support frame equipped with wheels so the reactor can be rolled around. The housings serve to make the reactor gas tight, prevent access to high voltage, and to hold the plumbing for the injector manifolds and the feedthrough for the high voltage power supply. Each flow channel is equipped with two $NH_3/N_2$ injection-gas manifolds (to feed gas from both top and bottom) and an injection-nozzle array. Each array consists of six 0.375 in (9.5 mm) OD nozzle pipes that hold 56 stainless steel injection nozzles (short lengths of hypodermic needle material) of 0.998 mm ID that protrude approximately 4 mm transverse to the nozzle pipes and perpendicular to the gas flow direction. The nozzle pipes are oriented vertically, being welded into horizontally-oriented 1 in (2.54 cm) OD gas manifolds. The gas manifolds are insulated from the reactor housing and the external injection-gas manifolds by segments of Teflon tube that are about 6 in (15 cm) long. These nozzle-pipe gas manifolds are connected via welded-on threaded studs and busbars to the 50 kV/85 mA, positive-polarity high voltage power supply (Spellman, Model number SA50*4) that drives the electrical corona discharge. The two

elements of the corona-electrode structure are the injection-gas nozzles (which are at high potential) and the flow-channel side walls (which are at ground potential).

The engine-exhaust gas inlet to the CRS reactor consists of a nominal 8 in (20 cm) diameter aluminum pipe that serves as a diagnostic spool for connecting sampling probes and a duct in the shape of a truncated tetrahedron. The outlet is a similar truncated tetrahedral duct (a shape commonly used for other ductwork in the system). The ductwork is normally flanged and bolted to various parts of the CRS system assembly. Rubber gaskets are used to provide seals between the flanges and other mating surfaces. Figures 4 and 5 show photographs of the CRS reactor (with the top housing and gas-handling ductwork removed) and a detail of a single injection-pipe/nozzle assembly. Six of these assemblies are employed in each of the six CRS reactor flow channels.

Downstream of the CRS reactor proper is the catalytic converter bank. It consists of four 3-way commercial automotive catalytic converters (Walker, part number 15147) connected in parallel. The inlet and outlet of the converters consist of tetrahedral ductwork and flanges similar to those used in the rest of the system. The catalytic converters are not heated but operate at the nominal collected engine exhaust temperature. Normally, heating provides better de-$NO_x$ performance. However, heating also requires extra energy input to the system and in overall increase in system cost. We have chosen to operate the catalytic converters at ambient temperature to avoid adding an external heat source and also to demonstrate system performance under more rigorous conditions.

The CRS reactor and the catalytic converter bank both play a role in removing $NO_x$ from the treated engine exhaust. Using $NH_3$ injection, it is expected that a portion of the $NO_x$ would be converted to solid nitrate compounds (e.g., ammonium nitrate suitable for agricultural fertilizer). A commercial electrostatic filter (Air Sponge Filter Co., microsponge filter pads) is placed downstream from the catalytic converter bank to capture such particulates for collection and later analysis. The filter cross section is approximately 53 cm x 63 cm and its thickness is approximately 2.5 cm. It is housed in a flanged aluminum box with gas-handling ductwork connected on the upstream and downstream sides. The filter box was sized for employing more than one filter element but one seemed sufficient for this application.

A centrifugal fan (American Fan Co., Model AF-9-R104135) is located downstream from the electrostatic filter. It is driven by a 1 hp, variable-speed electric motor. The fan functions to draw the collected slipstream engine exhaust from the CMTC chimney, through the CRS NTP system, and discharge the treated exhaust gas to the atmosphere via an exhaust pipe mounted through the roof of the equipment trailer.

Figures 6,7, and 8 are photographs of the interior of the equipment trailer showing the various components that comprise the CRS NTP hybrid system.

**CRS NTP Reactor System Operating Principles and Conditions**

Figure 9 shows a conceptual drawing of a single CRS reactor flow channel. In our de-$NO_x$ system, six of these channels are arranged side-by-side in a parallel gas-flow configuration.

Each of our CRS reactor flow channels basically consist of aluminum side walls (which serve as ground plates), an array of nozzle pipes and associated injector nozzles, and top and bottom manifolds which deliver the injection gas to the nozzles. The active volume of a flow channel is approximately 10 cm wide x 60 cm high x 125 cm long. The nozzles are made from large-bore hypodermic needle stock. They have an ID of about 1 mm and protrude about 4 mm from the nozzle pipes. The nozzles point perpendicular to the ground plates and are oriented transverse to the exhaust gas (main gas) flow. The nozzles are connected to a high voltage power supply, which drives corona discharge at the nozzle tips, through the nozzle pipes and injection-gas manifolds. In our tests, the voltage was typically 20-25 kV, while the current was in the range of about 10-20 mA.

Injection gases are supplied to the electrically-insulated manifolds from two external gas-supply tanks. One tank contained low-hydrocarbon compressed dry air. A second tank contained 10% $NH_3$ in a balance of dry nitrogen. The $NH_3/N_2$ mixture was combined with the dry air in an external mixing manifold and diluted to provide an injection gas containing $NH_3$ in a concentration of a few times that of the NO concentration in the CMTC exhaust (main gas flow into CRS reactor). The gas feeds were regulated by manually-operated flow meters (Hastings Company). In our tests, the typical gas flow rates into the mixer were 0.5 N L/min for the $NH_3/N_2$ mixture and 190 NL/min for the air, respectively. Representative main gas flow rates through the reactor were in the approximate range of 500-2,500 NL/min (30-150 $Nm^3/h$). To obtain the flow rate, the main gas speed was measured with an air-velocity transducer (Omega Instruments Co., Model FMA-902-V-S) and converted to flow rate, knowing the area of the sampling pipe that housed the probe. The main gas temperature was measured with a commercial temperature probe. Typical main gas temperatures at the entrance to the CRS reactor were in the range 20-50 C for the engine operating in the power range of about 75% and above (where most of our tests took place).

Because of the geometry of the injection nozzles, a relatively high electric field exists at their tips when the high voltage is applied from the power supply. This results in the generation of free radicals (e.g., O-atoms, N-atoms, OH, NH, $NH_2$, etc.) and other active species (e.g., $O_3$, metastable molecules, plasma electrons, etc.) in a plume of injection gas. The active-species corona plume (cone-shaped structure) diverges from the nozzles where it fans out and the active species mix with the main CRS reactor gas flow and react with the entrained pollutants in that gas stream. The injection-gas flow rate is normally adjusted so that the corona discharge is flow stabilized (does not transition into an arc). From bench-scale laboratory experiments, the required stabilization flow velocity was determined to be in the range of approximately 2-10 m/s, depending on the current and voltage supplied to the nozzles.

The active species reactions with the pollutants entrained in engine-exhaust gas/flue gas have been evaluated in detail by various workers. Here we will present a much-simplified reaction set to serve as an example for describing the main aspects of the de-$NO_x$ process, which is our main

interest. The simplified reaction scheme consists of the reactions listed below (M designates an arbitrary background gas species):

$O + NO + M \rightarrow NO_2 + M$ (radical-induced oxidation)

$N + NO \rightarrow N_2 + O$ (radical-induced reduction)

$NH_2 + NO \rightarrow N_2 + H_2O$ (radical-induced conversion of NO to $N_2$).

In moist gas (like our test jet-engine exhaust, which had a typical humidity of almost 1%), OH-radicals are produced by the corona-discharge plasma. The following reactions of OH-radicals with NO and $NO_2$ are the primary producers of nitrous and nitric acids, respectively.

$OH + NO + M \rightarrow HNO_2 + M$

$OH + NO_2 + M \rightarrow HNO_3 + M.$

These acids can be neutralized by a wet scrubber, yielding benign products. However, fairly high costs and maintenance activities are associated with wet scrubbing and a liquid effluent still remains.

In the presence of $NH_3$, it is possible to produce dry, collectible solid particulates by a reaction such as

$NH_3 + HNO_3 \rightarrow NH_4NO_3$ (ammonium nitrate).

The product ammonium nitrate can be employed as a useful agricultural fertilizer. Its value can also be used to offset the operating cost of a de-$NO_x$ system. The above reaction is one of the key features of the CRS reactor – it can operate in a dry-scrubbing mode like an electron-beam reactor but with considerably lower cost and complexity.

Additionally, $NH_3$ addition can play a role in the conversion of NO to $N_2$ by reactions such as

$OH + NH_3 \rightarrow NH_2 + H_2O$

$NH_2 + NO \rightarrow N_2 + H_2O$ .

The presence of hydrocarbons entrained in the engine-exhaust gas results in quite complex chemical reaction sets. Those will not be described here; for further information, the reader is referred to the literature on this subject. However, using a simplified reaction scheme taken from Penetrante et al 1997 [8], the influence of hydrocarbons and a catalyst on the conversion of NO to $N_2$ is described below.

First, in the presence of entrained hydrocarbons, active-species reactions in the non-thermal plasma oxidize NO to $NO_2$

$$NTP + O_2 + HC + NO \rightarrow NO_2 + HC^{PO},$$

Where $HC^{PO}$ is a partially oxidized hydrocarbon.

A selective-reduction catalyst, which utilizes the hydrocarbons, is then used to chemically reduce the $NO_2$ to $N_2$ (a very desirable result) by reactions of activated hydrocarbons on the catalyst surface. In the overall process, the hydrocarbons are also eliminated by reactions with $O_2$ on the catalyst surface.

$$Catalyst + NO_2 + HC^{PO} \rightarrow N_2 + CO_2 + H_2O .$$

Penetrante et al 1997 [9] have also shown that, in the presence of entrained hydrocarbons, O and OH react with the hydrocarbons to produce $HO_2$ and hydrocarbon radicals. With the hydrocarbons, NO is mainly oxidized to $NO_2$ by reactions with these radicals, regenerating OH in the process. Overall, because of the recycling of OH, the energy cost for NO oxidation to $NO_2$ is reduced.

The hybrid CRS-catalytic-converter hybrid system makes use of the synergy of direct radical-induced reduction, oxidation of NO to $NO_2$, reactions of ammonia to convert NO to $N_2$ and $NH_4NO_3$, and catalytic conversion of $NO_2$ to $N_2$. Because many reaction schemes come into play for the hybrid system, it is envisioned to be a highly useful tool for engine test facility de-$NO_x$, once the process is optimized.

**Emission Conditions for a Cruise Missile Engine Test Cell**

Exhaust-gas emissions (particularly NO, total $NO_x$, CO, $CO_2$, and total hydrocarbons – THCs) for a representative Tinker AFB JETCs have been previously characterized by Spicer et al [10]. However, emissions from Tinker CMTCs have not been fully characterized. Some limited emissions sampling and analysis work has been carried out on two CMTCs at Tinker during March 1999 by McMaster University and Los Alamos personnel, with assistance from Tinker personnel, have provided preliminary emissions data for a CMTC. That work is described in an earlier report from McMaster University [6].

These limited data were used to guide the design of our field-pilot de-$NO_x$ system and to provide guidance for field operations. The data would also be used in providing input to the plans and statement of work of the Tinker AFB contractor in charge of the CMTC exhaust-gas sampling and analysis field work.

Based on the Spicer data and the limited McMaster-Los Alamos-Tinker sampling work, we projected the CMTC exhaust gas parameters that might be encountered in the field. Table 1 lists the estimated CMTC gas composition and exhaust emissions, along with those for a representative JETC.

The actual emissions, as measured by the sampling and analysis contractor, will be presented later in this report.

**Summary Description of Major Tasks for Emissions-Reduction Field Tests**

**Pre-Field Tests**: Using a bench-scale CRS system at McMaster University, a series of lab-scale tests to determine the destruction efficiency and determine the plasma operating conditions for the selected Tinker AFB emissions were carried out. This information helped allow us to specify the operating-parameter range for the demonstration equipment to be fielded. For example, it pointed out the need to include catalytic converters for the very low NO concentrations characteristic of a CMTC.

Also, at Los Alamos, the field-test system was assembled in the laboratory and subjected to shakedown tests to qualify the equipment for field service and to provide operational guidance for the field work. The shakedown concentrated on identifying stable operating regimes for the CRS voltage and current, as well as demonstrating at least a 50% removal of $NO_x$.

**Field Tests:** The trailer-mounted unit (power supplies, plasma reactor, catalytic converter unit, electrostatic filter bank, and gas-handling ductwork) was transported to Tinker AFB unassembled in the 20-ft equipment trailer. The equipment trailer was sited as close to a CMTC chimney as possible (to keep the exhaust-gas collection ductwork short). The individual system parts were then assembled in the field and mounted in the trailer. Electrical power was supplied to the equipment trailer from base power (a 208V/3-$\phi$ source).

Individual test runs were characterized by a combination of corona voltage and current fixed at a stable operating point. The plasma-processor system was operated in blocks of time (e.g., one to two hours) for a series of test runs that would coincide with non-interference with the normal CMTC engine tests. The plasma processor did not have to run continuously during these time blocks - only long enough to achieve stabilize operation and to collect analytical samples. For each test run, gas samples were taken at the entrance to the plasma processor and downstream of the CRS reactor and electrostatic filter bank. The mobile unit is a low capacity system designed for demonstration - not full-scale testing. Therefore, the entire emission or process-gas stream was not treated by the plasma unit (only a low flow-rate portion). The approximate flow capacity of the plasma system was designed to be 120 $Nm^3/hr$ (an order of magnitude scale-up from the McMaster bench-scale system). However, in the field, our representative operating range was in the nominal range of 30-150 $Nm^3/hr$.

Trailer siting, provision of electrical power, and emission-stream extraction was be coordinated by Tinker AFB personnel. Los Alamos and McMaster University personnel set up and operated the plasma processor and associated equipment. Contractor personnel (URS-Radian International) collected gas samples and analyzed them on line (and would provide a subset of samples for off-line analysis, if necessary). URS-Radian International also had a trailer sited next to the plasma processor. This trailer contained the gas analysis equipment, recording equipment, and work stations [7].

**Setup, Run, and Sampling Times:** The equipment trailer arrived at the Tinker test site on 27 March 2000. In the field, LANL personnel assembled the equipment, secured it in the trailer, installed the exhaust-gas collection ductwork, and performed shakedown tests of the equipment (particularly the gas flow and electrical systems). This setup process took about two and one-half days. During the same time, Radian set up the their gas sampling and analysis systems. Initial, preliminary tests of the CRS NTP system on CMTC exhaust took place late in the afternoon of 29 March. As Tinker engine-test schedules and engine availability permitted, the main CRS system test runs were carried out during the period 30 March – 4 April (excepting the weekend days of 1 and 2 April). Testing was completed on 4 April and system disassembly and packing for shipment was completed by 5 April. The equipment trailer was then sent back to Los Alamos on 6 April.

The NTP processor was run for approximately four hours per day (2 hours in morning and 2 hours in afternoon), during which time gas sampling and analysis was performed. It was desired that on-line gas-sampling instruments record during the entire run times and that particulate samples be taken at periodic intervals, starting with a baseline before the NTP processor is turned on.

**Gas Sampling and Analysis Plan:** Under contract to Tinker AFB through AFCEE, a detailed gas sampling and analysis statement of work was prepared by URS-Radian International with input from LANL and McMaster University. A description of the test procedures and the results of the gas sampling and analysis work are contained in the Radian report [7].

**Summary Results from Field Tests**

The test plan called for emissions measurements of the following species: oxides of nitrogen (NO and $NO_2$), nitrous oxide ($N_2O$), sulfur dioxide ($SO_2$), oxygen ($O_2$), carbon dioxide ($CO_2$), carbon monoxide (CO), ozone ($O_3$), ammonia ($NH_3$), total and speciated hydrocarbons, nitrates and/or nitrites (as acids or particulates), and particulate matter. The reader is referred to the Radian report [7] for how measurements of these analytes were performed using continuous emission monitoring techniques, Fourier Transform Infrared (FTIR) analysis, and selected manual techniques. The subject report also contains detailed results of the planned-for and measured CMTC emissions, both at the inlet and outlet of the CRS/NTP test system.

We originally anticipated injecting ammonia in concentrations 1.5 to 2 times the total expected $NO_x$ concentration in the exhaust. However, at times, this rose to a few to several times the $NO_x$ concentration, thus requiring modification of some of the analytical equipment and techniques. These modifications precluded the measurement of some of the compounds of interest to us, particularly simultaneous data collection of some cyclic compounds (e.g., benzene). Such modifications and their effects on the planned measurements are described in detail in the referenced URS-Radian International Report [7].

Also, the presence of significant quantities of exhaust-gas soot passing through the CRS system prevented us from optimizing the operation of the pilot-test device in the field (particularly not being able to achieve long-term stable current-voltage operation). However, data of special

interest, i.e. removal of total oxides of nitrogen and the generation of nitrite and nitrate compounds were able to be acquired under limited sets of plasma-processor system operating conditions.

Additionally, high de-$NO_x$ values were limited to a flow rate range up to about 80 $Nm^3/h$, instead of our originally-planned main gas flow rate of 120 $Nm^3/h$ because of the number of catalytic converters placed in series with the CRS reactor. We have discovered that, to achieve high de-$NO_x$ up to 120 $Nm^3/h$, six catalytic converters, rather than the four we used, would be required. However, the field test demonstrated that the CRS reactor was doing its job – the high de-$NO_x$ performance was just limited by the treatment-flow capacity of the catalytic converters. Also, we ran the catalytic converters without any external heating. External heating would have allowed an increase in catalytic treatment-flow capacity but would have added to the operating energy requirements of the system.

Figure 10 shows representative plots of the removal of various species of interest from the collected slipstream CMTC exhaust versus the slipstream gas flow rates, using the hybrid CRS/NTP reactor system with a bank of catalytic converters. The data were selected from that which demonstrated relatively stable current-voltage operating conditions (which would be expected to provide rather uniform corona around the majority of the injector nozzles). Also, the operating conditions, in terms of injected air flow, injected $NH_3/N_2$ mixture, total $NO_x$ concentration, and electrical power delivered to the CRS reactor, were relatively constant for the representative data set presented here.

The plots in Figure 10 represent the concentrations of the following species: [NO], nitric oxide; [$NO_x$], the sum of nitric oxide and nitrogen dioxide or [$NO + NO_2$]; and [$NO_y$], the sum of $NO_x$ and nitrous oxide or [$NO_x + N_2O$]. Typical, CMTC emission concentrations at the inlet of the test system were of order [NO] ~ 7 ppm, [$NO_2$] ~ 1 ppm, and [$N_2O$] ~ 0.5 ppm. Figure 10 shows high NO removal; however, this is mainly oxidation to $NO_2$ (and some $N_2O$), so the parameters [$NO_x$] and [$NO_y$] are of greater interest in evaluating system performance. Typical values for these parameters, corresponding to Figure 10, were [$NO_x$] ~ 7.5-8 ppm and [$NO_y$] ~ 8-8.5 ppm.

Other parameters corresponding to Figure 10 are the injection air flow rate (about 183 NL/min), the 10% $NH_3/N_2$ mixture injection flow rate (0.5 NL/min), and the electrical power supplied to the CRS reactor (in the range 227-346 W; average of 287 W). Data points on the figure correspond to a main gas flow rate range of 36 $Nm^3/h$ to 130 $Nm^3/h$ (about 600 NL/min to 2167 NL/min).

It is observed that the removal of NO is very high (typically 85-100%). However, as mentioned before, this removal is actually conversion to $NO_2$ and $N_2O$. As seen in the plot for $NO_y$, values for de-$NO_y$ can actually go negative if sufficient $N_2O$ is produced under some reactor operating conditions. Sometimes, even some $NO_x$ can be created, which also may contribute to negative values of de-$NO_y$. The maximum value of de-$NO_x$ achieved was 81% at a main gas flow rate of 36 $Nm^3/h$. This is actually higher than the values achieved in the earlier bench-scale laboratory tests. The de-$NO_x$ values drop off at higher flow rates, because of the reasons concerning stable operation and number of catalytic converters previously discussed. However, the de-$NO_x$ value

is still 69% at 72 $Nm^3/h$ (which is a six-fold scaleup from the McMaster bench-scale laboratory unit). Even considering the shortcomings of non-optimized performance for the field-pilot unit, quite reasonable de-$NO_x$ was still achieved.

It is interesting to examine the plasma specific power (supplied electrical power P divided by main gas flow rate Q) P/Q for this system. The average electrical power is 287 W. Dividing this by the gas flow rate for the two cases of 69% and 81% de-$NO_x$ gives average plasma specific powers of 14.4 J/NL and 28.7 J/NL, respectively. Even taking the high value of 346 W for the 69% de-$NO_x$ value gives P/Q = 17.3 J/NL. To achieve a similar de-$NO_x$ value, a stand-alone electrical-discharge plasma reactor (e.g., pulsed corona or dielectric barrier) requires about 50 J/NL of specific power. This shows the beneficial effects of a hybrid system employing ammonia injection and catalytic converters.

Gas samples were also taken downstream of the CRS reactor itself. Unfortunately, not as much useful data were obtained for this case. Extrapolating the limited post-CRS sampled data to the approximate midpoint of the Figure 10 de-$NO_x$ plot (72 $Nm^3/h$) gives CRS-only de-$NO_x$ values in the approximate range 22-34%. At first examination, this would imply that the CRS reactor is only achieving about one-third to one-half of the total system de-$NO_x$ function by itself. However, the ammonia in the gas stream continues to play a role in overall de-$NO_x$, the significance of this role depending on the gas-processing residence time. Therefore, in retrospect, it would have been prudent to sample the gas stream from the CRS reactor further downstream, thus allowing a correlation of de-$NO_x$ performance with gas-treatment residence times in the system. Because this was not done, one can only make fairly rough estimates on the CRS-only performance, as determined by our limited data for this case.

Analysis of residues in the reactor in the CRS NTP system inlet and outlet filters showed a significant change in the amount of sulfate and nitrate compounds collected [7]. Sulfates, as expected, were very low (0.18 $\mu g/cm^2$ inlet versus 0.22 $\mu g/cm^2$ outlet) because there is little sulfur present in the JP-10 engine fuel. However there was a much larger change in collected nitrate compounds, from about 18 $\mu g/cm^2$ at the inlet to about 64 $\mu g/cm^2$ at the outlet electrostatic filter – a statistically significant result. A sample wipe sample from the CRS reactor itself showed approximately 68 $\mu g/cm^2$ nitrate. This implies that the system is indeed converting $NO_x$ into nitrate compounds, a desirable effect we had intended to demonstrate.

## Economics Based on NTP de-$NO_x$ System Scale and Duty factors

Previously, Kim and Chang have developed a computer-based model (SUENTP) for calculating the costs associated with de-$SO_x$/de-$NO_x$ based on both NTP and conventional systems [11]. That model, which was developed for a commercial power plant (mainly NO and $SO_2$ emissions), simulates scale-up and economic factors for several eligible NTP processes for air pollution control - electron beam process, pulsed corona process, and corona radical shower process - and makes comparisons with the conventional technologies of Selective Catalytic Reduction (SCR) and Wet Scrubbers. It should be noted that power plant emissions of $NO_x$ are similar to those of jet-engine test facility exhausts (our primary target for this project). The

SUENTP code has also been upgraded since its original inception and is now called the SUENTP-J code.

The data obtained from pilot-plant tests are input with general data to provide information for the conceptual design of scaled-up commercial plants. The economic evaluation procedure deals with the total capital investment and the total annual cost. The total capital investment comes into the indirect annual cost as the item of capital recovery.

In one of our earlier reports [12], SUENTP model results for de-$NO_x$ costs for three NTP technologies (pulsed corona, corona radical shower, electron beam) compared to two conventional technologies (wet scrubber + SCR and SCR + ESP - electrostatic precipitator) were presented. That report showed that cost projections for JETC de-$NO_x$ using NTP systems were more favorable than the conventional technologies.

It is useful to express treatment costs in terms the total annual system cost and also in the units of \$/ton $NO_x$ removed to provide a simpler means of comparing the NTP costs with the costs of purchasing $NO_x$ credits and the cost of de-$NO_x$ by conventional technologies. Since the earlier reports, our colleague, Dr. Urashima, at McMaster University has run the SUENTP-J code for 87 days/year (or approximately 40 h/week) operation, a condition more closely resembling an upper limit for actual JETC facility operations [13]. Earlier calculations were based on 292 day/year operation (an 80% duty factor more akin to power plants than JETCs).

Clearly, both the operational duty factor (hr/wk of run time) and the scale of a treatment system (as measured by the treated exhaust-gas flow rate) have effects on both the total annual cost and the specific cost. In this section, we will show both costs in terms of system scale size (flow rate) for a realistic JETC operational duty factor of 40 h/wk. The cost calculations are based on emissions-removal condition benchmark data presented in earlier McMaster University report [6]. We have not adjusted the benchmark conditions, based on the field-pilot test results, because we feel the large quantities of soot prevented the attainment of optimal operating conditions that would have an unknown effect on the cost-estimation basis.

Table 2 shows the more recent results for total annual cost and the cost of NO removal in \$/ton for three system scale sizes, flow rates of $5.9 \times 10^4$ SCFM ($1.0 \times 10^5$ $Nm^3/h$), $1.0 \times 10^6$ SCFM ($1.7 \times 10^6$ $Nm^3/h$) and $4.0 \times 10^6$ SCFM ($6.8 \times 10^6$ $Nm^3/h$). In all three cases, the NO and $SO_2$ concentrations are 36 ppm and 5 ppm, while the gas temperature in the reactor is 25 C. These cases are meant to span the operational regime of a representative JETC.

This table clearly shows that de-$NO_x$ costs are high for low NO concentrations and high exhaust-gas flow rates. It also shows that the specific costs (\$/ton) for the two conventional technologies are extremely prohibitive. The total annual cost increases with exhaust flow rate but the specific cost decreases (because more $NO_x$ is both emitted and removed at the higher flow rates).

Previous annualized-cost estimates for a full-scale NTP-based (pulsed corona + wet scrubbers) JETC de-$NO_x$ system by other workers [14], have ranged from \$22,000 ton $NO_x$ removed to

$138,000 ton $NO_x$ removed, based on exhaust $NO_x$ concentrations of 4 to 36 ppm and 50 h/week operation.

Figure 11 shows the data from Table 2 for a CRS reactor system only. We believe the CRS reactor will prove to be the best de-$NO_x$ system for JETCs, once optimized. It should provide dry scrubbing of the exhaust gas, producing collectible particulates in the process. In addition, the CRS/NTP system uses a DC power supply, which is much simpler and less expensive than that for a pulsed corona system. The data in the table and the graph provides a basis for selecting the most appropriate de-$NO_x$ system technology for a given DoD large-scale, engine-testing application.

## Conclusions

The CRS NTP reactor uses a large collection of fine nozzles, connected to a source of high voltage, to inject a mixture of air and dilute ammonia ($NH_3$)/nitrogen ($N_2$) into the portion of the CMTC exhaust-gas stream sampled by the plasma reactor. The combination of non-thermal plasma formed at the nozzle tips using the injection gas functions to produce active species for de-$NO_x$ (e.g., O-atoms, N-atoms, NH radicals, etc.). NO in the presence of O-atoms is rapidly converted into $NO_2$ (de-NO but not de-$NO_x$). In the presence of $NH_3$ and the plasma, conversion of total $NO_x$ (NO + $NO_2$), actual de-$NO_x$, takes place. Because the concentration of NO in the CMTC exhaust was quite low (< 10 ppm), a bank of automotive catalytic converters was placed after the CRS reactor in the field-pilot system. The purpose of this bank was to further promote de-$NO_x$ (conversion of $NO_2$ to $N_2$) in the presence of a catalyst (and facilitated by entrained hydrocarbons in the gas stream that are activated by the plasma). For JETCs, where the NO concentration is ~ 50 ppm, such a catalyst bank is not necessary. The field tests at Tinker AFB have shown promising results for some system operating conditions. In the field tests, 70-100% de-NO normally was achieved because the CRS reactor was operated primarily under oxidizing conditions. For some cases (main gas flow rate < 80 $Nm^3/h$), the combination of radical chemistry, reaction with $NH_3$, and reactions in the catalytic bank resulted in conditions for which 65-80% total de-$NO_x$ was achieved. This can be compared with a typical commercial catalyst-only de-$NO_x$ system for diesel engines, which usually achieves total de-$NO_x$ of 10-15%.

High de-$NO_x$ values were limited to a flow rate range up to about 80 $Nm^3/h$, instead of our originally-planned main gas flow rate of 120 $Nm^3/h$ because of the number of catalytic converters placed in series with the CRS reactor. We have discovered that, to achieve high de-$NO_x$ up to 120 $Nm^3/h$, six catalytic converters, rather than the four we used, would be required. However, the field test demonstrated that the CRS reactor was doing its job – the high de-$NO_x$ performance was just limited by the treatment-flow capacity of the catalytic converters. Also, we ran the catalytic converters without any external heating. External heating would have allowed an increase in catalytic treatment-flow capacity but would have added to the operating energy requirements of the system.

Analysis of residues in the reactor in the CRS NTP system inlet and outlet filters showed a significant change in the amount of sulfate and nitrate compounds collected. Sulfates, as expected, were very low because there is little sulfur present in the JP-10 engine fuel. However

there was a change in collected nitrate compounds from about 18 $\mu g/cm^2$ at the inlet to about 64 $\mu g/cm^2$ at the outlet electrostatic filter. This implies that the system is indeed converting $NO_x$ into nitrate compounds, a desirable effect we had intended to demonstrate.

We originally anticipated injecting ammonia in concentrations 1.5 to 2 times the total expected $NO_x$ concentration in the exhaust. However, at times in the field, this concentration unfortunately rose to a few to several times the $NO_x$ concentration, thus requiring modification of some of the analytical equipment and techniques. These modifications precluded the measurement of some of the compounds of interest to us, particularly simultaneous data collection of some cyclic compounds (e.g., benzene), as described in the Radian report.

In addition, scaled-up de-$NO_x$ systems were studied and cost analyses and economic assessments for various NTP reactor systems compared to conventional selective catalytic reduction (SCR) - wet scrubber technology were carried out. These indicated that NTP technology is cost-competitive for jet-engine exhaust de-$NO_x$. In particular, we have estimated costs that can be compared with earlier-reported NTP Jet Engine Test Cell (JETC) de-$NO_x$ systems. In this report, we have also presented the total annual cost of JETC de-$NO_x$ systems as a function of the operating scale (i.e., the exhaust-gas flow rate). The cost per unit mass of $NO_x$ removed also has been calculated, depending on system scale (flow rate) and duty factor (total operating time per week or year). The economic analyses provide a basis for selecting the most appropriate de-$NO_x$ system technology for a given DoD application.

## Recommendations for Future Work

Under this project, much has been learned about the application of NTPs to actual CMTC emissions. However, there is still more work to be carried out to fully optimize the CRS NTP reactor under real-world conditions. If future work were possible, it should concentrate on:

- The design and testing of inlet soot filters to prevent the introduction of large amounts of soot into the CRS NTP reactor;
- Tests to more completely optimize the voltage-current operating characteristics of the reactor under actual field conditions (including the presence of moderate soot content);
- Installation of two more catalytic converters in the system and subsequent performance testing with the additional catalytic converters in place (particularly testing to achieve high de-$NO_x$ for higher exhaust-gas flow rates);
- Potential repetition of field tests under more fully optimized conditions and the incorporation of knowledge learned from the above-mentioned work.

## Acknowledgments

We would like to express our appreciation to the SERDP program for the initiation and funding of this project. Also, we would like to thank Tinker AFB for hosting the field-pilot tests on one of their CMTCs, their help in coordinating the tests, assistance in the field, and their support of the exhaust-gas sampling and analysis work carried out by URS-Radian International Corporation.

## References


1. L.A. Rosocha, A.W. Miziolek, R.E. Huie, J.S. Chang, and J.T. Herron, "Development of Non-Thermal Plasma Reactor Technology for Control of Atmospheric Emissions: Interim Technical Report for SERDP Project CP-1038 (1999), *Los Alamos National Laboratory Report, LA-UR-98-5553* (December 1998).
2. L.A. Rosocha, J.S. Chang, K. Urashima, P.C. Looy, A.W. Miziolek, M.J. Nusca, R.G. Daniel, J.T. Herron, and R.E. Huie, "Development of Non-Thermal Plasma Reactor Technology for Control of Atmospheric Emissions: Annual Report for SERDP Project CP-1038 (1999), *Los Alamos National Laboratory Report, LA-UR-99-6799* (December 1999).
3. M.R. Schluep and L.A. Rosocha, "$NO_x$ Removal via Dielectric-Barrier Discharge Plasma, *Los Alamos National Laboratory Report, LA-UR-99-6499* (December 1999).
4. L.A. Rosocha, J.S. Chang, and A.W. Miziolek, "Initial Designs of Electric-Discharge Non-Thermal Plasma Field-Pilot Demonstration Units for $NO_x$ Removal In Jet-Engine Exhaust: White paper for SERDP Project CP-1038," *Los Alamos National Laboratory Report, LA-UR-99-5345* (November 1998).
5. L.A. Rosocha, "De-$NO_x$ Cost Estimates in Units $/Ton $NO_x$ Removed", *Los Alamos National Laboratory Report, LA-UR-99-5525* (September 1999).
6. K. Urashima, P.C. Looy, and J.S. Chang, "Final Report: Semi-Pilot Plant Test for Non-Thermal Plasma Reactors – Electrostatic Precipitator System for Control of $NO_x$ Released During Army and Related U.S. Department of Defense (DoD) Operations", *McMaster University Report* (December 1999).
7. URS-Radian International Corporation, "Results of Testing Performed to Evaluate Cruise Missile Test Cell Emissions and the Effectiveness of an Experimental Control Device Technology," USAF Contract No. F41624-97-D-8020, Delivery Order No. 0113, Radian Contract No. 80480013 (August 2000).
8. B.M. Penetrante, M.C. Hsiao, B.T. Merritt, G.E. Vogtlin, C.Z. Wan, G.W. Rice, and K.E. Voss, "Plasma-Assisted Heterogeneous Catalysis for $NO_x$ Reduction in Lean-Burn Engine Exhaust," *Proceedings of the 1997 Diesel Engine Emissions Reduction Workshop*, pp. 101-107 (July 1997).
9. B.M. Penetrante, W.J. Pitz, M.C. Hsiao, B.T. Merritt, and G.E. Vogtlin, "Effect of Hydrocarbons on Plasma Treatment of $NO_x$," *Proceedings of the 1997 Diesel Engine Emissions Reduction Workshop*, pp. 123-127 (July 1997).
10. C.W. Spicer, M.W. Holdren, S.E. Miller, D.L. Smith, R.N. Smith, and D.P. Hughes, "Aircraft Emissions Characterization: F101 and F110 Engines," *Air Force Engineering & Services Center, Tyndall Air Force Base Report, ESL-TR-89-13* (1990).
11. S.J. Kim and J.S. Chang, "SUENTP Code Simulation of Scaleup and Economic Evaluation of Non-Thermal Plasma Technology for Exhaust Gas Emission Control of Coal Fired Power Plants," *Proceedings of International Conference on Electrostatic Precipitators* (September 1998).
12. L.A. Rosocha, J.S. Chang, K. Urashima, S.J. Kim, and A.W. Miziolek, "Cost Analysis and Economic Assessment of Proposed Electric-Discharge Non-Thermal Plasma Processes for $NO_x$ Removal in Jet-Engine Exhaust," *Los Alamos National Laboratory Report, LA-UR-98-4926* (October 1998).
13. K. Urashima, McMaster University, *Private communication* (July 1999).

14. S.M. Haythornthwaite, M.D. Durham, D. Rugg, and J.D. Wander, "Application of Pulse-Corona-Induced Plasma to Jet Engine Test Cells," *Paper presented at the Air & Waste Management Association 90th Annual Meeting & Exhibition* (June 1997).

## Tables and Figures

See the following pages for tables and figures referenced in the report text.

**Table 1:** Estimated CMTC exhaust-gas parameters as compared to those for a representative JETC.

| Source Data | Variable | Units | JETC Value | CMTC Value (Est.) |
|---|---|---|---|---|
| Gas Flow | $Q_{gas}$ | $Nm^3/h$ | 1.0E+05<br>1.7E+06 | 6.6E+03<br>1.3E+04 |
| Fuel | | | JP-5 | JP-10 |
| **Final Exhaust-Gas Composition** | | | | |
| $N_2$ | $C_{N2}$ | % | 80.98 | 78.00 - 79.10 |
| $O_2$ | $C_{O2}$ | % | 18.00 | 20.90 |
| $CO_2$ | $C_{CO2}$ | % | 0.50 | 0.30 |
| $H_2O$ | $C_{H2O}$ | % | 0.50 | 0.50 |
| Density (Normal) | $D_{gas}$ | $kg/Nm^3$ | 1.283 | 1.283 |
| Exhaust Gas Temperature | $T_{gas}$ | C | 25 | 30 - 40 |
| NTP Inlet Temperature | $T_{NTPin}$ | C | 25 | 25 - 30 |
| Pressure | $Pr_{gas}$ | torr | 720 | 720 |
| | | | | |
| **Emission Data** | | | | |
| $NO_x$ | $C_{NOx}$ | ppm | 36.00 | ~ 5 - 10 |
| $SO_2$ | $C_{SO2}$ | ppm | 4.59 | ~ 1 - 2 |
| HC (VOC) | $C_{HC}$ | ppm | 60.00 | 78.00 |
| CO | $C_{CO}$ | ppm | 53.36 | ~ 5 |
| Particles | $C_{part}$ | $mg/Nm^3$ | - | ~ 1 |

**Table 2:** Total annual cost and specific cost comparisons for NTP *vs* conventional technologies.

| Gas Flow Rate: $1.0 \times 10^5$ $Nm^3/h$ ($5.9 \times 10^4$ SCFM) | | | | | |
|---|---|---|---|---|---|
| | Pulsed Corona | Corona Shower | Electron Beam | Wet Scrubber + SCR | ESP + SCR |
| Total Annual Cost (k$) | 592 | 690 | 1,119 | 734 | 759 |
| Specific Cost ($/ton NO) | 76,358 | 88,999 | 144,333 | 94,674 | 97,899 |
| **Gas Flow Rate: $1.70 \times 10^6$ $Nm^3/h$ ($1.0 \times 10^6$ SCFM)** | | | | | |
| | Pulsed Corona | Corona Shower | Electron Beam | Wet Scrubber + SCR | ESP + SCR |
| Total Annual Cost (k$) | 5,922 | 6,806 | 9,964 | 15,648 | 14,259 |
| Specific Cost ($/ton NO) | 44,932 | 51,639 | 75,599 | 118,725 | 108,187 |
| **Gas Flow Rate: $6.8 \times 10^6$ $Nm^3/h$ ($4.0 \times 10^6$ SCFM)** | | | | | |
| | Pulsed Corona | Corona Shower | Electron Beam | Wet Scrubber + SCR | ESP + SCR |
| Total Annual Cost (k$) | 20,176 | 23,872 | 30,651 | 79,863 | 105,056 |
| Specific Cost ($/ton NO) | 38,270 | 45,281 | 58,139 | 151,485 | 199,272 |

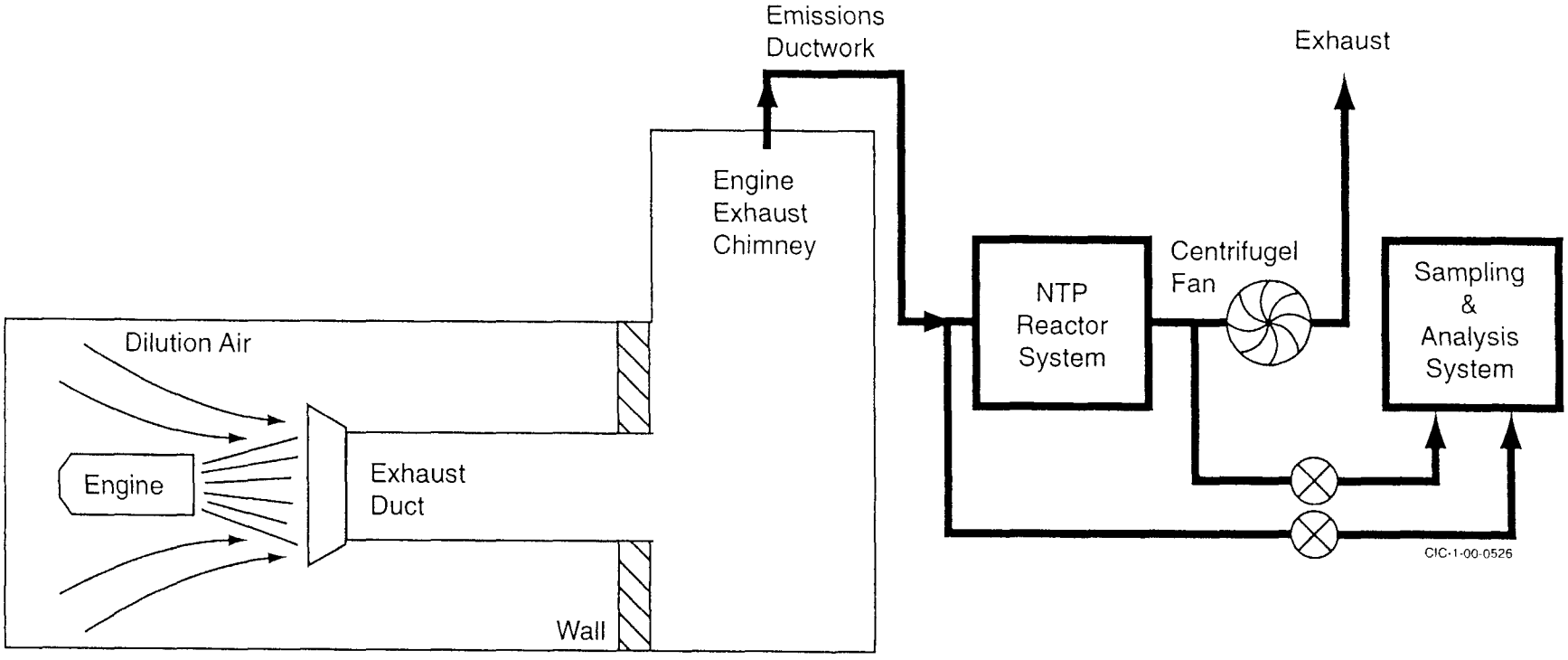


**Figure 1:** Schematic diagram of test setup for field-pilot demonstration of NTP de-NOx system on a CMTC at Tinker AFB.

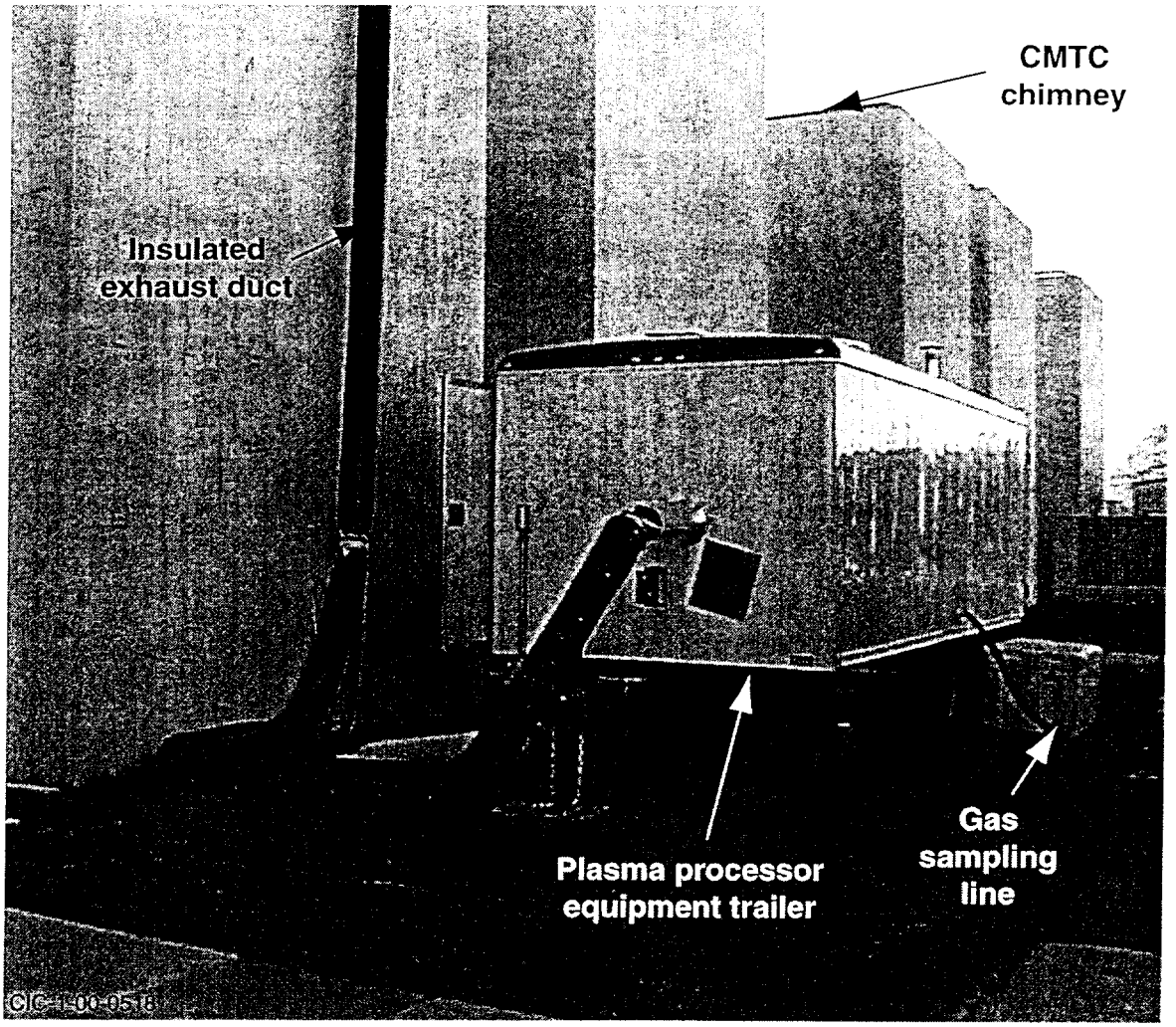


**Figure 2:** Photograph of plasma-processor equipment trailer as placed for field tests on a CMTC at Tinker AFB.

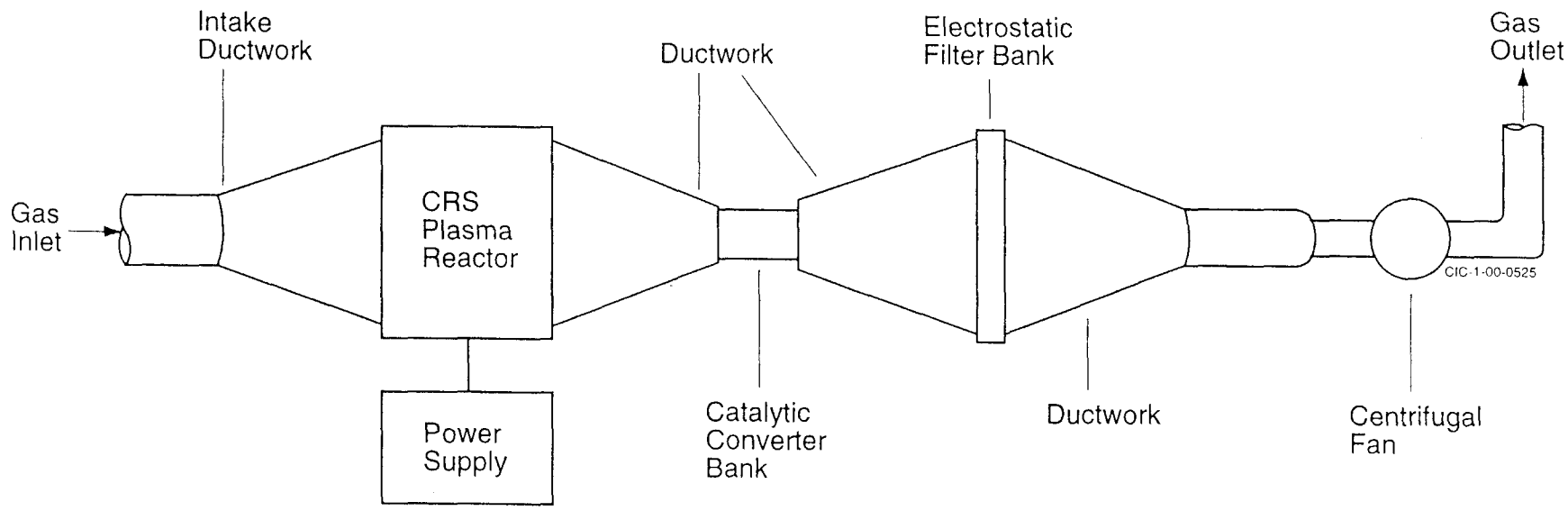


**Figure 3:** Schematic diagram of CRS/NTP demonstration system (this portion of system is mounted in a 20-ft equipment trailer).

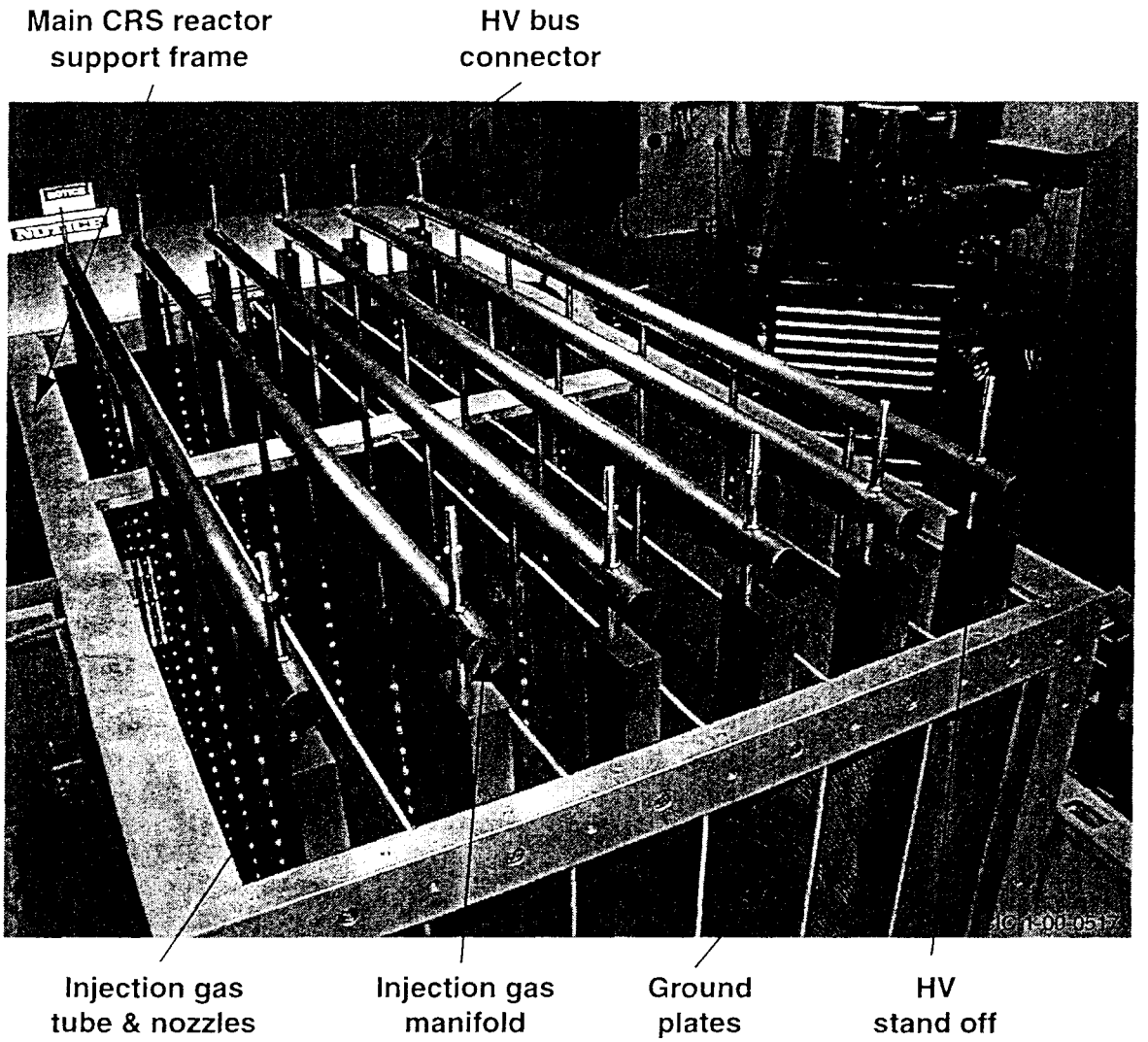


**Figure 4:** Photograph of CRS reactor assembly, with top housing and gas ductwork removed.

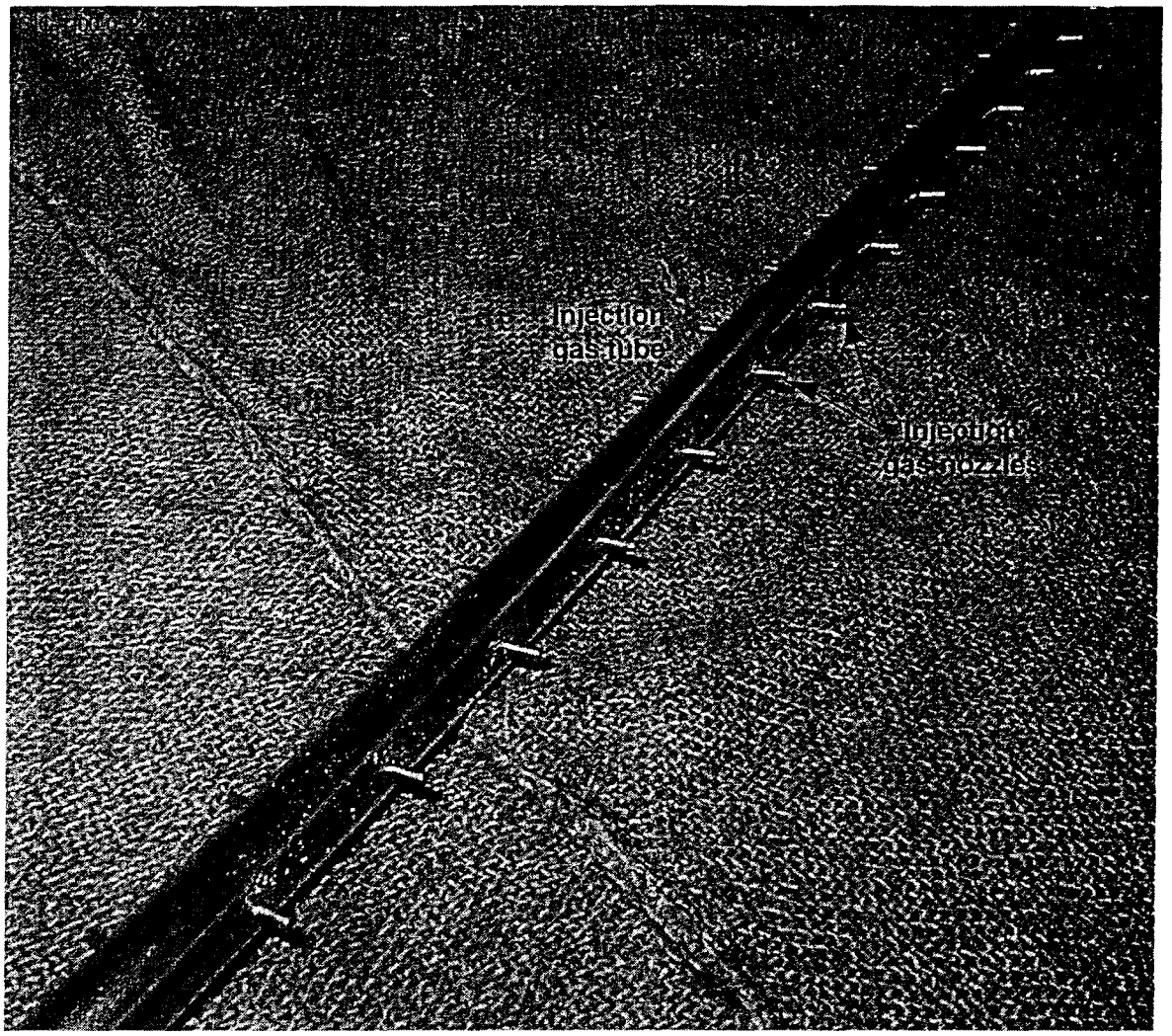


**Figure 5:** Photograph showing a detailed view of a single injection-pipe/nozzle assembly.

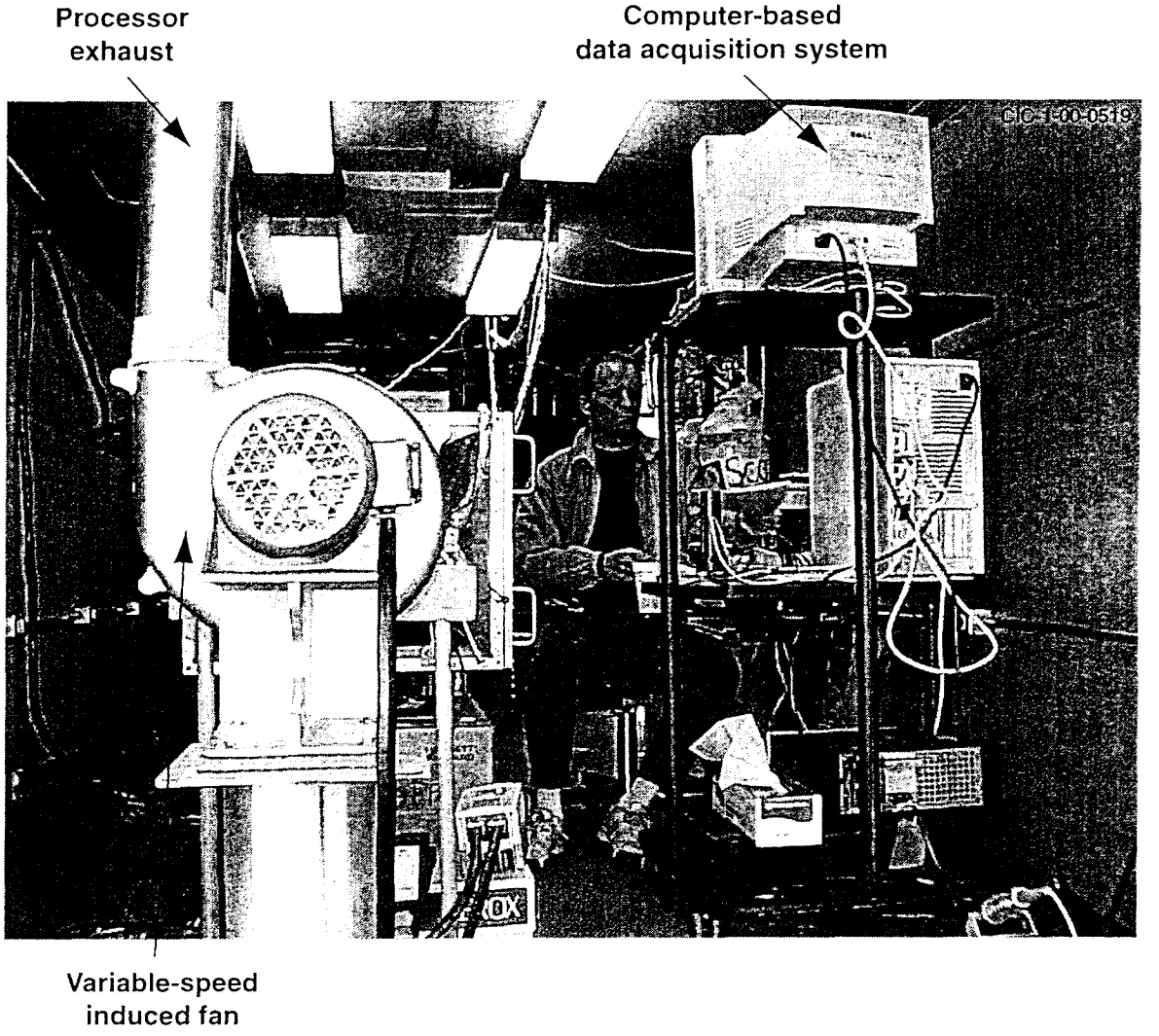


**Figure 6:** Interior view of CRS system equipment trailer (photo taken from rear of trailer).

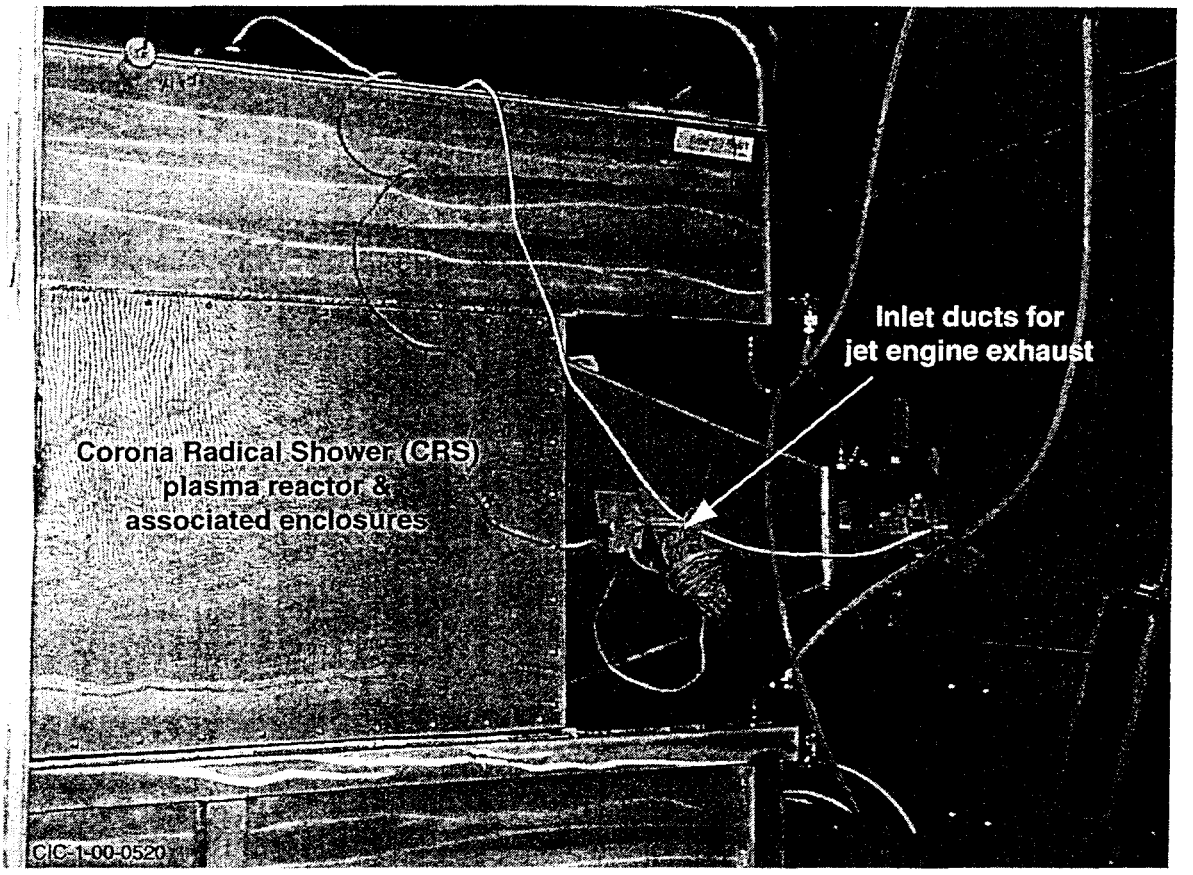


**Figure 7:** Interior view of CRS system equipment trailer showing system inlet and part of CRS reactor.

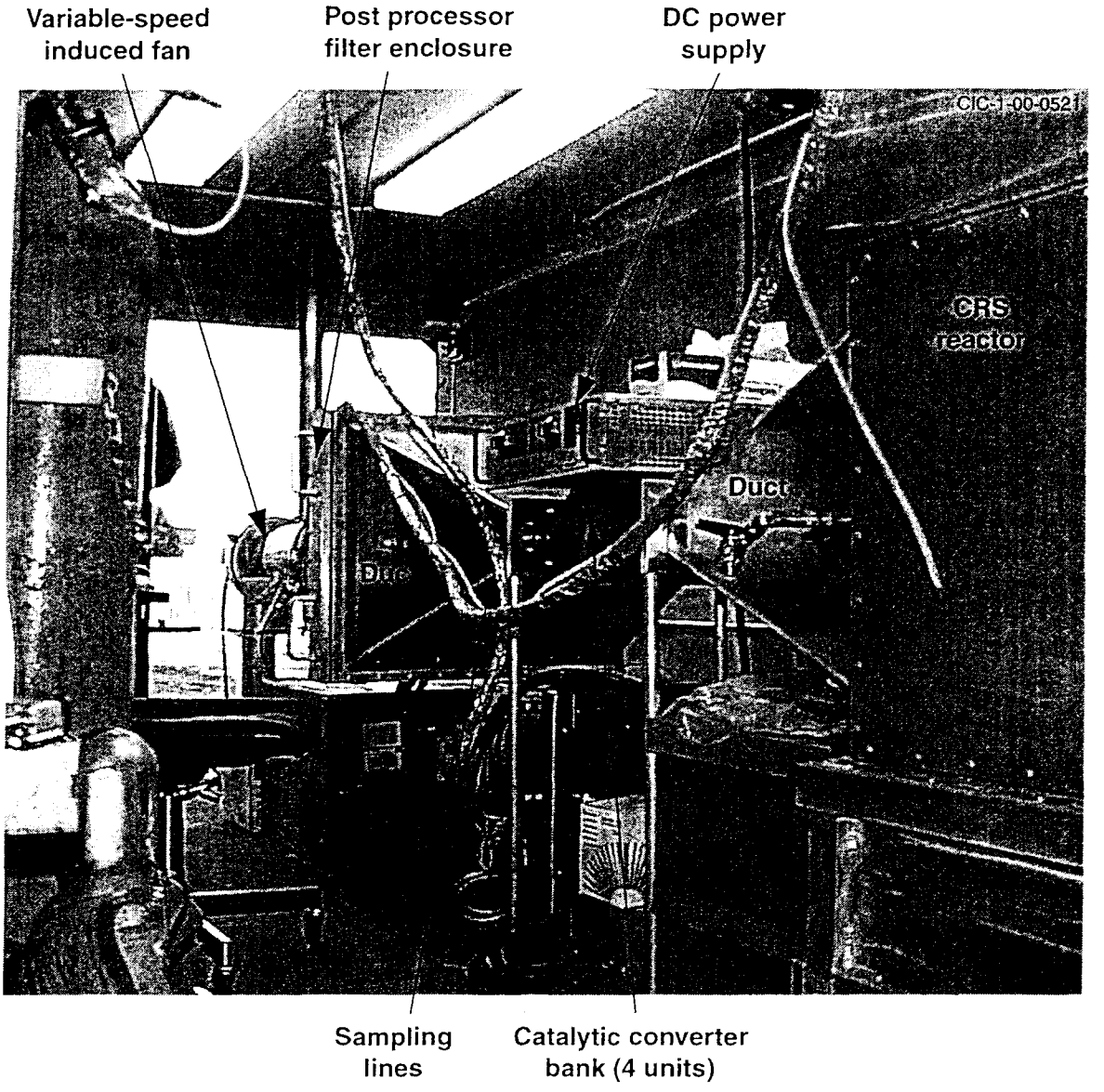


**Figure 8:** Interior view of CRS system equipment trailer; photo taken from the right front looking toward the rear of the trailer.

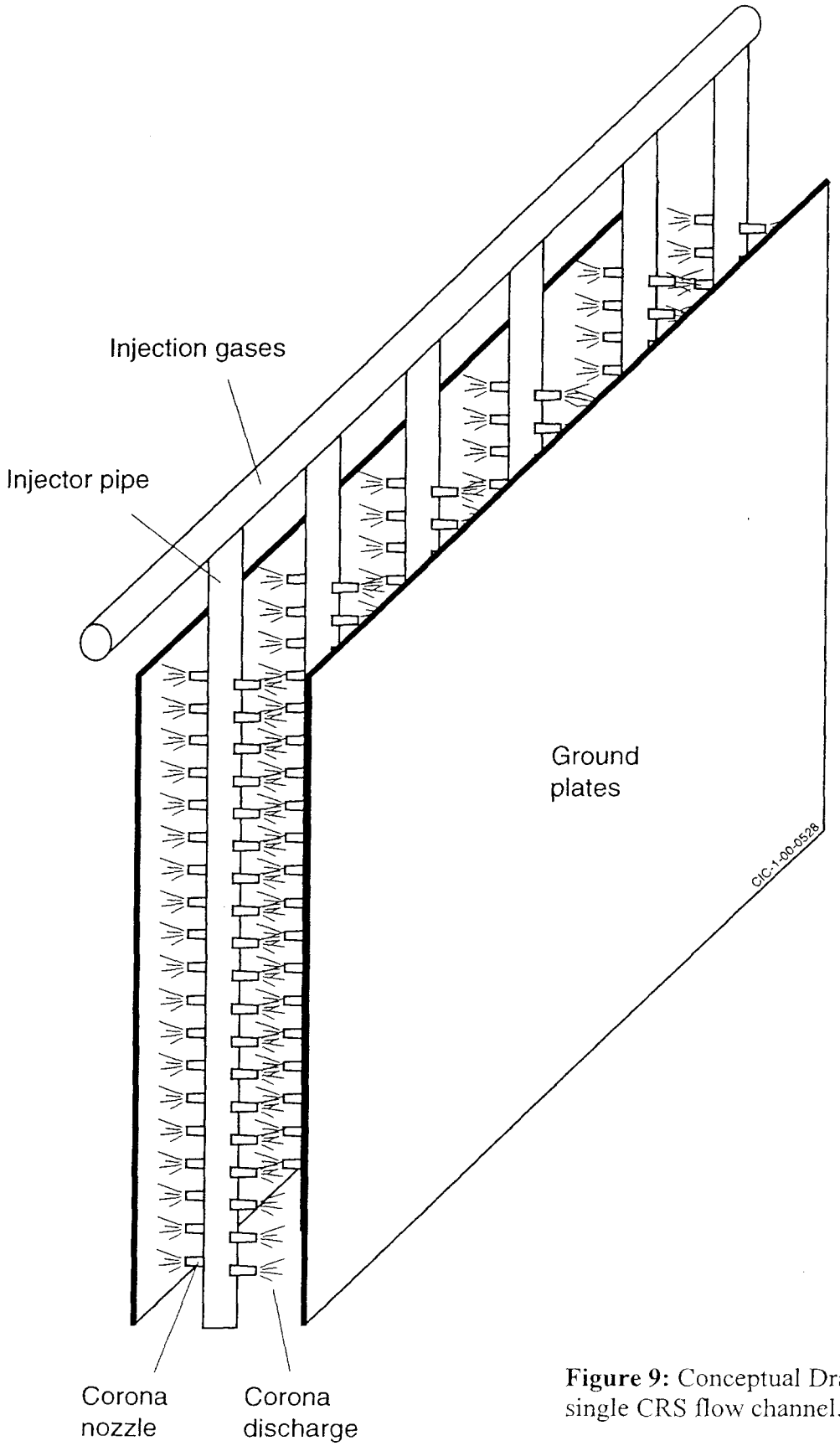


**Figure 9:** Conceptual Drawing of a single CRS flow channel.

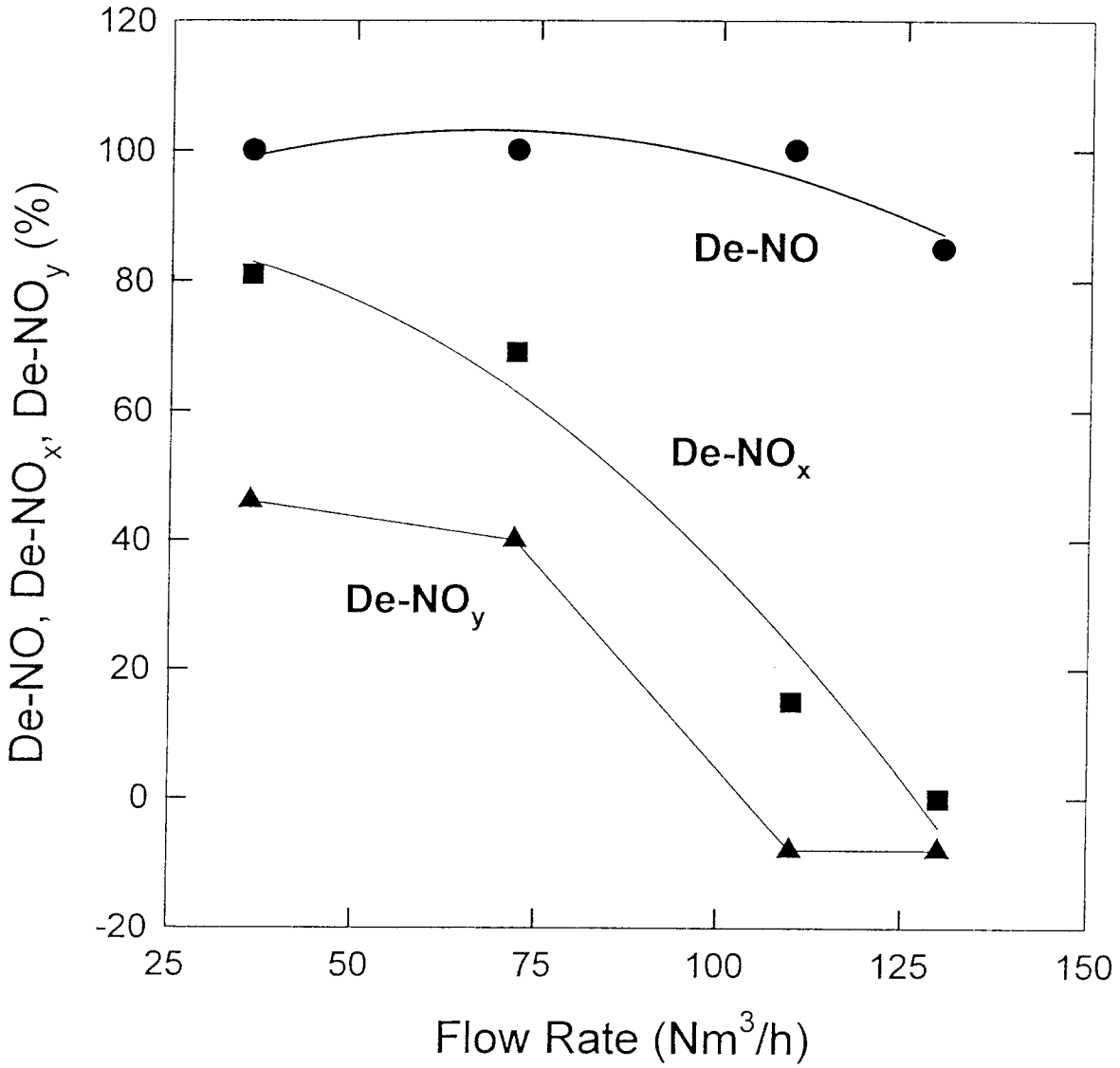


**Figure 10:** Plots of removal fractions of various $NO_x$ species, using data from CRS NTP catalytic hybrid system field-pilot tests on a CMTC at Tinker AFB.

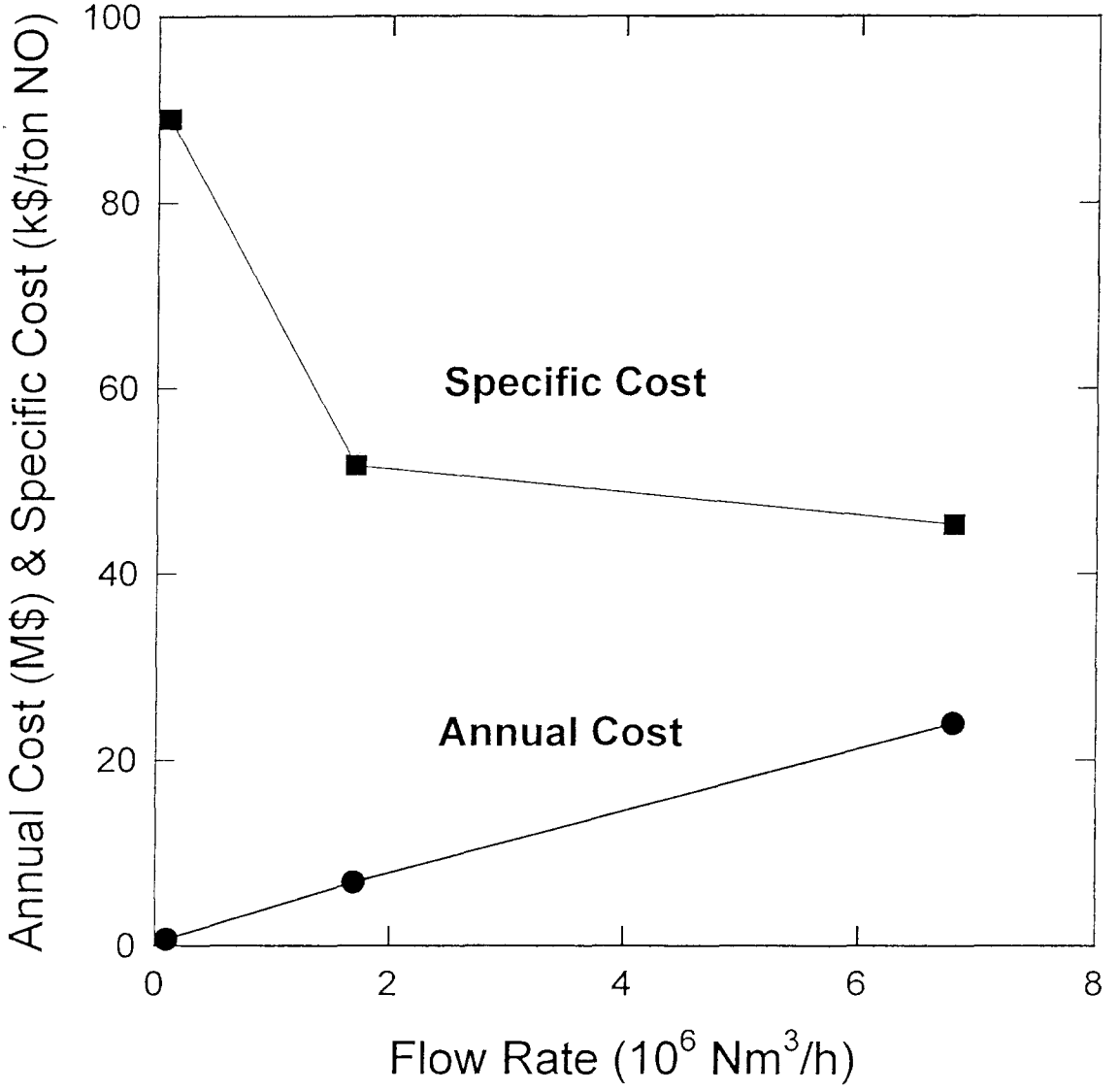


**Figure 11:** CRS model calculations of total annual costs and specific costs of NO removal from Jet Engine Test Cell (JETC) exhaust versus system scale size (expressed in terms of exhaust-gas flow rate).