ESTCP
Cost and Performance Report

(WP-9910)

Validation of Alternative to Ozone-Depleting Chemicals Used in Oxygen Line Cleaning

July 2006

ENVIRONMENTAL SECURITY
TECHNOLOGY CERTIFICATION PROGRAM

U.S. Department of Defense

CLEARANCE REQUEST FOR PUBLIC RELEASE OF DEPARTMENT OF DEFENSE INFORMATION

(See Instructions on back.)

(This form is to be used in requesting review and clearance of DoD information proposed for public release in accordance with DoDD 5230.9.)

TO: Director, Freedom of Information & Security Review, Rm. 2C757, Pentagon

1. DOCUMENT DESCRIPTION

a. TYPE Cost & Performance Report	b. TITLE For Validation of Alternatives to Ozone-Depleting Chemicals Used in Oxygen Line Cleaning (WP-9910)
c. PAGE COUNT 33	d. SUBJECT AREA Environmental Security Technology Certification Program

2. AUTHOR/SPEAKER

a. NAME *(Last, First, Middle Initial)* Hayes, Mary	b. RANK	c. TITLE
d. OFFICE		e. AGENCY Air Force

3. PRESENTATION/PUBLICATION DATA *(Date, Place, Event)*

Posting on the ESTCP web site.

CLEARED
For Open Publication
MAY 26 2006 5
Office of Security Review
Department of Defense

4. POINT OF CONTACT

a. NAME *(Last, First, Middle Initial)* Rusk, Jennifer	b. TELEPHONE NO. *(Include Area Code)* 703-326-7801

5. PRIOR COORDINATION

a. NAME *(Last, First, Middle Initial)*	b. OFFICE/AGENCY	c. TELEPHONE NO. *(Include Area Code)*
Marqusee, Jeffrey	ESTCP Director	703-696-2120
Pellerin, Charles	ESTCP Weapons Platforms Program Manager	703-696-2128

6. REMARKS

THE INFORMATION CONTAINED IN THIS REPORT FALLS UNDER THE PURVIEW OF THIS OFFICE.

WHEN CLEARED, PLEASE FAX DD-1910 TO 703-478-0526. ATTN: Jennifer Rusk (phone: 703-326-7801)

if mailed: ATTN: Jennifer Rusk, 1155 Herndon Parkway, Suite 900, Herndon, VA 20170

7. RECOMMENDATION OF SUBMITTING OFFICE/AGENCY

a. THE ATTACHED MATERIAL HAS DEPARTMENT/OFFICE/AGENCY APPROVAL FOR PUBLIC RELEASE *(qualifications, if any, are indicated in Remarks section)* AND CLEARANCE FOR OPEN PUBLICATION IS RECOMMENDED UNDER PROVISIONS OF DODD 5320.9. I AM AUTHORIZED TO MAKE THIS RECOMMENDATION FOR RELEASE ON BEHALF OF:

Environmental Security Technology Certification Program

b. CLEARANCE IS REQUESTED BY 20060519 *(YYYYMMDD)*.

c. NAME *(Last, First, Middle Initial)* Marqusee, Jeffrey	d. TITLE Director, Environ. Security Technology Certification Program
e. OFFICE OUSD(I&E)	f. AGENCY OUSD (A&T)
g. SIGNATURE	h. DATE SIGNED *(YYYYMMDD)* 20060501

06-S-1581

COST & PERFORMANCE REPORT
ESTCP Project: WP-9910

TABLE OF CONTENTS

Page

1.0 EXECUTIVE SUMMARY 1
- 1.1 BACKGROUND 1
- 1.2 OBJECTIVES OF THE DEMONSTRATION 2
- 1.3 REGULATORY DRIVERS 2
- 1.4 DEMONSTRATION RESULTS 2
- 1.5 STAKEHOLDER/END-USER ISSUES 4

2.0 TECHNOLOGY DESCRIPTION 5
- 2.1 TECHNOLOGY DEVELOPMENT AND APPLICATION 5
  - 2.1.1 Technology Background, Development, Function, and Intended Use 5
  - 2.1.2 Systems to Which the Technology is Applicable 7
  - 2.1.3 Replacement Material 7
  - 2.1.4 Theory of Operation 7
- 2.2 PROCESS DESCRIPTION 7
- 2.3 PREVIOUS TESTING OF THE TECHNOLOGY 9
- 2.4 ADVANTAGES AND LIMITATIONS OF THE TECHNOLOGY 10

3.0 DEMONSTRATION DESIGN 11
- 3.1 PERFORMANCE OBJECTIVES 11
- 3.2 SELECTION OF TEST PLATFORM/FACILITY 12
- 3.3 TEST FACILITY HISTORY/CHARACTERISTICS 12
- 3.4 PHYSICAL SETUP AND OPERATION 13
- 3.5 SAMPLING/MONITORING AND ANALYTICAL PROCEDURES 13

4.0 PERFORMANCE ASSESSMENT 15
- 4.1 PERFORMANCE DATA 15
- 4.2 PERFORMANCE CRITERIA AND DATA EVALUATION 19
- 4.3 TECHNOLOGY COMPARISON 19

5.0 COST ASSESSMENT 21
- 5.1 COST REPORTING 21
- 5.2 COST ANALYSIS 21
- 5.3 COST COMPARISON 23

6.0 IMPLEMENTATION ISSUES 27
- 6.1 SCALE-UP 27
- 6.2 OTHER SIGNIFICANT OBSERVATIONS 27
- 6.3 LESSONS LEARNED 27
- 6.4 END-USER/ORIGINAL EQUIPMENT MANUFACTURER (OEM) ISSUES 28
- 6.5 APPROACH TO REGULATORY COMPLIANCE AND ACCEPTANCE 28

TABLE OF CONTENTS (continued)

Page

7.0 REFERENCES 29

APPENDIX A POINTS OF CONTACT A-1

FIGURES

Page

Figure 1. System Schematic. 8
Figure 2. Versar, Inc.'s Oxygen-Line Cleaning System. 16
Figure 3. Front of B-1B with Versar, Inc.'s Oxygen-Line Cleaning System..... 16
Figure 4. ECAM Methodology Flow Diagram 22

TABLES

Page

Table 1. Process Times 3
Table 2. Common Engineering and Test Requirements for Oxygen-Line Cleaning Onboard Aerospace Vehicles..... 6
Table 3. Performance Objectives and Results 11
Table 4. Initial Capital Investment Made for Each of the Four Aircrafts..... 24
Table 5. Regulator Scheduled and Unscheduled Equipment Cost with Potential Cost Savings..... 24
Table 6. Converter Scheduled and Unscheduled Equipment Cost with Potential Cost Savings..... 24
Table 7. Net Present Value 25
Table 8. Internal Rate of Return..... 25
Table 9. Payback Period in Years 25

This page left blank intentionally.

ACRONYMS AND ABBREVIATIONS

AFB	Air Force Base
ALC	Air Logistics Command
ANG	Air National Guard
ASTM	American Society for Testing and Materials
CBA	cost-benefit analysis
CFC	chlorofluorocarbons
CTC	Concurrent Technologies Corporation
DLA	Defense Logistics Agency
DoD	Department of Defense
ECAM	Environmental Cost Analysis Methodology
EPA	Environmental Protection Agency
ESTCP	Environmental Security Technology Certification Program
FT-IR	Fourier transform-infrared
GC	gas chromatograph
HazMat	hazardous materials
HCFC	hydrochlorofluorocarbon
HFE	hydrofluoroether
Hg	mercury
IRR	internal rate of return
JG-PP	Joint Group on Pollution Prevention
JTP	joint test protocol
JTR	Joint Test Report
LOX	liquid oxygen
NASA	National Aeronautics and Space Administration
NOCS	Navy oxygen cleaning system
NPV	net present value
NVR	nonvolatile residue
ODP	ozone-depleting potential
ODS	Ozone-depleting substance
OEM	original equipment manufacturer
OLCS	oxygen-line cleaning system

P/B	payback period
PDM	program depot maintenance
SAE	Society of Automotive Engineers
SEM	Scanning electron microscope
SM	Single manager
USAF	United States Air Force

ACKNOWLEDGEMENTS

This Cost and Performance Report was prepared by Concurrent Technologies Corporation (CTC) in cooperation with Versar, Inc. to satisfy the requirements of the Environmental Security Technology Certification Program (ESTCP), Project No. PP-199910. This report was prepared on behalf of and with the guidance of the U.S. Air Force (USAF), ESTCP, Tinker Air Force Base (AFB), and the Joint Group on Pollution Prevention (JG-PP). The structure, format, and depth of the report were determined by ESTCP in response to the specific needs of this project.

The project team wishes to thank the participants involved in the creation of this document for their invaluable contributions: ESTCP, JG-PP, Tinker AFB, Robins AFB, the Oklahoma Air National Guard (ANG), Tulsa ANG Base, and the B-1B, B-2, F-15, and F-16 aircraft programs.

The Technology Final Report and Joint Test Report (JTR) document the results of testing performed in accordance with the *Joint Test Protocol (J-99-CL-015-P1) for Validation of Alternatives to Ozone-Depleting Chemicals Used in Oxygen-Line Cleaning*, dated July 24, 2001. These reports are available as a reference for future pollution prevention endeavors by other U.S. Department of Defense (DoD), National Aeronautics and Space Administration (NASA), and industry organizations to minimize duplication of effort.

Technical material contained in this report has been approved for public release.

This page left blank intentionally.

1.0 EXECUTIVE SUMMARY

1.1 BACKGROUND

To complete this project, government and industry joined to develop a better way to clean the oxygen-supply systems of weapons systems by replacing ozone-depleting chemicals and a labor-intensive process with an environmentally safe, automated method that improves upon past practices. The new oxygen-line cleaning system (OLCS) technology developed as a result of this project improves the readiness of military aircraft, reduces costs, and dramatically reduces the crewmembers' chances of exposure to unhealthy toxins.

Cost-benefit analyses performed for this report show that the new OLCS will pay for itself in less than 6 months when used on the C-130, F-15, and F-16 aircraft. The payback period may be longer for the T-38 aircraft. (See Section 5 and Table 7.) Furthermore, because the OLCS is expected to result in at least a 25% reduction in replacement parts, annual cost savings are projected as follow: $315,000 for the F-15; $292,000 for the F-16; and $75,000 for the C-130. (See Table 5.)

This project was designed to address the use of chemicals with ozone-depleting potential (ODP). Chemicals with known ODP are being phased out of industrial and commercial use. CFC-113 and hydrochlorofluorocarbonn (HCFC)-141b solvents such as Freon have high ODP, yet are commonly used to clean the oxygen-supply systems of Department of Defense (DoD) aircraft. Weapons systems have several types of oxygen-supply systems, all of which eventually develop contamination in the distribution system. In addition to human concerns, contaminant buildup decreases system performance, increases demand on maintenance resources, and prematurely removes the aircraft from mission support.

To clean an oxygen system, the plumbing system has to be completely dismantled, removed from the aircraft, cleaned using chlorofluorocarbons (CFC), and then reinstalled in the aircraft. This time-consuming process is neither cost-effective nor safe. Currently, flight line maintenance procedures require on-board oxygen systems to be hot-air purged every 180 days. In addition to flight line maintenance, program depot maintenance (PDM) is performed on aircraft every 6 years. During PDM, a similar hot-air purge procedure is also conducted.

Gas purging—whether cold or hot, oxygen, nitrogen, or air—is accomplished according to a schedule determined by the specific aircraft system manager. Thus the frequency will vary by aircraft. Purging is not cleaning. The purpose of purging is to remove moisture that builds up in the aircraft plumbing. The plumbing is cleaned only on an emergency basis, when the plumbing is known to be contaminated with a hazardous material such as a hydrocarbon. Routine cleaning has not been performed in the past because a process did not exist to accomplish cleaning in an economical and timely manner. Thorough cleaning generally requires disassembly of plumbing, cleaning individual components, and controlled reassembly. This process is very expensive and results in significant aircraft downtime and recontamination from open tubing and threaded components. It has always been our contention that routine cleaning is needed and would be done given a reasonable process to do so. Since the disassembly method is not routinely done we used one example of emergency cleaning performed on a B-1B aircraft. The entire process cost approximately $1 million, according to the aircraft system manager. In FY 04, three

predelivery, modified C-130Js were cleaned using the OLCS process to avoid the cost of disassembly and a late delivery date. We were not provided with numbers; however, the OLCS process was chosen over the normal method and was praised as a money and time saver.

The Environmental Security Technology Certification Program (ESTCP) sponsored the project, Onboard Oxygen-Line Cleaning System for Use with DoD Weapons Systems, to design, construct, and demonstrate/validate an environmentally friendly prototype OLCS. The new OLCS is contained within a 12-ft by 7-ft housing that can easily be maneuvered alongside the aircraft. (See Figures 2 and 3 for photos of the OLCS.) With the OLCS, CFCs and HCFCs are eliminated from the cleaning process.

1.2 OBJECTIVES OF THE DEMONSTRATION

The objective was to demonstrate the full capability of the OLCS by cleaning the oxygen lines of a B-1B aircraft at Tinker Air Force Base (AFB), Oklahoma. The successful demonstration met all performance objectives. Using the B-1B, the demonstration validated the oxygen-line cleaning prototype, proved its environmental acceptability, validated the discovery of a cost-effective alternative to HCFC-141b and CFC-113 (Freon), and proved that the OLCS is a cost-effective method for onboard cleaning of aircraft oxygen systems.

The original scope of the project was expanded to include demonstration cleaning on other aircraft. Demonstration on the F-16 took place at Tulsa Air National Guard (ANG) Base, Tulsa, Oklahoma; the F-15 demonstration was held at Robins AFB, Georgia; and the C-130 demonstration was held at the ANG Base, Louisville, Kentucky. Cost-benefit analysis was also performed for a fourth aircraft, the T-38.

1.3 REGULATORY DRIVERS

A congressional mandate has banned the regular use of all CFCs and other volatile ozone-depleting compounds. The Clean Air Act, the congressional mandate, and international agreements prohibited the U.S. military from using ozone-depleting materials after the year 2000. Some waivers are in place allowing CFC use, but executive orders (such as 12856 and 13149) have tasked government agencies to identify cleaning solvents to replace CFC-113.

1.4 DEMONSTRATION RESULTS

Using this new technology, one operator can clean the entire plumbing system on an aircraft the size of a B1-B in less than 4 hours at an estimated cost of less than $2,000. Demonstration results show that the new technology will reduce aircraft downtime and decrease the time and expense currently associated with maintaining oxygen systems. Both the DoD and commercial carriers should save money by eliminating the need to purchase and dispose of ODC chemicals.

With any cleaning event there will be some set-up time that will be similar for any aircraft. In addition to set-up time there is the conduct of the actual cleaning process. F-15 and F-16 aircraft have simpler oxygen systems and less plumbing than the B1-B. Prototype cleaning generally required less than 3 hours, but this can vary if leaks, which must be corrected, are found in the system. Cost to clean these aircraft would be reduced from the B-1B an estimated $1,900.00

approximately one hour of shop labor. The C-130 aircraft has a more complex oxygen system than the B-1. Cleaning the C-130Js required approximately 8 hours per aircraft. The cost if the aircraft were local would have been on the order of the B1B plus additional labor. However, in the case of the three C-130Js, the equipment had to be transported across country with the engineer, a program manager, and two technicians. In addition, hoses, manifolds and fittings to make the connections had to be purchased. The effort took more than a week due primarily to transportation. The total cost was $25,000. We would estimate that if the equipment were on site and all hardware was in place so that only the one operator were involved, the cost to clean a C-130 or C-130J would be approximately $3,000 and $3,500, respectively. These costs are definitely estimates. Routine cleaning cost would depend on many factors such as utilization of the equipment and scheduling efficiency, and whether the equipment was leased or purchased.

Process times for different weapon systems are estimated in Table 1 below.

Table 1. Process Times.

Using OLCS Process		Disassembly - Re-assemble Process	
Time (hours)	**Cost ($ thousands)**	**Time (hours)**	**Cost ($ thousands)**
F-15 3	1,900,000	160	250,000 (est)
F-16 3	1,900,000	160	250,000 (est)
B-1B 4	2,000,000	240	1,000,000 (est)
C-130G 6	3,000,000	180	500,000 (est)
C-130J 8	3,500,000	200	550,000 (est)

The above times and costs for the disassembly and re-assembly process are guesses based on the only available data ($1 million for the B-1B) and assuming that that number included original equipment manufacturer (OEM) involvement, which would tend to greatly increase cost.

The time and cost is not simply to disconnect tubing and remove it from the aircraft for cleaning and putting it back on. To remove tubing often involves removing aircraft skin to access the tubing (F-16) or other components, such as most of the avionics on the B-1B. After reassembly, the tubing must be leak tested and repaired as needed, and all other removed components and the systems to which they are attached must be retested. As is the case with all maintenance, anytime a component or system is disturbed there is an increased risk of maintenance-induced failure. Electronic connectors can be damaged, threads can be stripped, components can be dropped, etc. With the OLCS process, breaking into the system and disturbing other components is kept to an absolute minimum, often with only input and output connections at each end of the plumbing.

Most of the tests called for in the Joint Test Protocol (JTP) were conducted as specified in the JTP, but in executing some of the tests, deviations became necessary to accomplish the intended goal. These deviations were fully agreed upon by all stakeholders and are detailed in Section 2.1.2 of the Joint Test Report (JTR). The tests included liquid oxygen (LOX) compatibility testing, materials compatibility, nonvolatile residue (NVR) testing, moisture tests, cleanliness verification, functional test, component/model/system replica test, dead areas test, leak test, hazard analysis, and additional tests, all of which are detailed in Section 4 of the Technology

Final Report and the JTR. For example, 13 of 14 total trials from the NVR tests showed that the new online cleaning system produced oxygen lines that were at least 95.28% clean. Of the 14 trials conducted, nine resulted in 99% cleanliness or greater. (See Table 14 of the JTR.)

1.5 STAKEHOLDER/END-USER ISSUES

One concern expressed by the three aircraft stakeholders is that there is no current requirement that a full-system cleaning be performed on military aircraft. Until now, oxygen lines could not be cleaned without disassembly of the entire aircraft-oxygen system.

The current stakeholders are the B-52, F-15, and F-16 system managers. The B-52 Program has started to incorporate OLCS into their tech orders. The F-15 and F-16 are still studying the issues and have not yet made a decision.

Each aircraft systems manager has autonomy concerning processes to be accomplished on his or her aircraft. Full aircraft system cleaning will be a matter of showing the benefits of the process and convincing the aircraft managers that they should do so. If this capability had been available in years past, it is quite possible that it would be the current primary method.

2.0 TECHNOLOGY DESCRIPTION

2.1 TECHNOLOGY DEVELOPMENT AND APPLICATION

2.1.1 Technology Background, Development, Function, and Intended Use

As outlined in the *Joint Test Protocol (J-99-CL-015-P1) for Validation of Alternatives to Ozone Depleting Chemicals Used in Oxygen Line Cleaning*, dated July 24, 2001, this project was designed to eliminate or reduce two hazardous materials (HazMats): chlorofluorocarbons (CFC), specifically CFC-113, and hydrochlorofluorocarbons (HCFC), specifically HCFC-141b. The process identified was equipment cleaning. The application identified was oxygen-line cleaning of aerospace vehicles, surface ships, and submarines. (The joint test protocol (JTP) included Air Force, Navy, and Northrop Grumman. The Air Force portion was the oxygen-line cleaning system (OLCS). This equipment was designed for aerospace vehicles. Surface ships and submarine cleaning was to be the purview of the Navy. They did work in this area but to our knowledge did not submit data for the report. They were given separate funds for their part of the effort.) The two alternative technologies were a zero-ozone-depleting cleaning solvent and an aqueous cleaning system.

The two methods of cleaning tested for qualification were an onboard and an off-aircraft method. The alternative cleaning solvent test onboard used equipment (OLCS) provided by Versar. The OLCS functions as a stand-alone system capable of cleaning aerospace plumbing systems onboard the aircraft. As no disassembly is required, considerable time is saved. The solvent tested off-aircraft used equipment provided by Northrop Grumman and an aqueous cleaner was tested using an off-aircraft cleaning system, the Navy oxygen cleaning system (NOCS). (No aqueous cleaning onboard the aircraft was designed or tested. Individual tubes can be cleaned off the aircraft with solvent or aqueous, but moisture, let alone water, is the enemy of complete systems and is not acceptable.

The *Joint Test Report (J-99-CL-015-R1) for Validation of Alternatives to Ozone Depleting Chemicals Used in Oxygen Line Cleaning*, dated September 4, 2002, documents the results of the testing, describes any test modifications made during the execution of testing, and identifies technically acceptable alternatives to the baseline process. Technical stakeholders were advised of all test procedure modifications documented in this Joint Test Report (JTR). All tests met the acceptance criteria established in the JTP.

Table 2 lists all engineering and test requirements identified by the Joint Group on Pollution Prevention (JG-PP) participants for validating alternatives to CFC-113 and HCFC-141b used in onboard oxygen-line cleaning.

Table 2. Common Engineering and Test Requirements for Oxygen-Line Cleaning Onboard Aerospace Vehicles.

Test	Test Platform	JTP Section	Acceptance Criteria	References
Liquid oxygen (LOX) Impact	Laboratory[1]	2.1	Zero reactions for 20 successive impacts[2] at 98 J (72 ft-lb_f)	American Society for Testing and Materials (ASTM) G86
Materials compatibility	Laboratory[1]	2.2	No visible or permanent evidence of substrate deterioration	ASTM G127 Versar Test Plan
Nonvolatile residue (NVR)	B1-B mock-up[1] and actual[2]	2.3	To be defined by each platform, but generally Level A: NVR ≤ 1 mg/sq ft Level B: NVR ≤ 2 mg/sq ft Level C: NVR ≤ 3 mg/sq ft Orbiter[5]: NVR ≤ 0.3 mg/sq ft Baseline (before soiling): NVR ≤ 0.3 mg/sq ft	ASTM F331 Society of Automotive Engineers (SAE) ARP1176
Moisture	Laboratory[2]	2.4	Less than 60 ppm water by weight	ASTM D5530
Cleanliness verification	B-1B mock-up and actual	2.5	Particle count[6] in low-pressure systems (except Orbiter LOX[4]): ≤ Level 300 Particle count in Orbiter (LOX): ≤ Level 50 Particle count in high-pressure systems ≤ Level 200 for all platforms Baseline particle count ≤ 25	ASTM G93 ASTM F312 SAE ARP1176 Versar Test Plan
Functional test	Actual	2.6	Oxygen-line system function and operation has not been impaired by the cleaning process. Acceptable oxygen will have no odor and no constituents[7], per the test methodology	Aircraft T.O. MIL-PRF-27210G
Component/ model/system replica test	B-1B mock-up	2.7	Cleanliness verification per JTP Sec. 2.5 B-1B mock-up oxygen-line system function and operation has not been impaired by the cleaning process	Versar Test Plan
Dead areas[8]	B-1B mock-up	2.8	Solvent concentration in air purge stream is continuously below 600 ppm	ASTM G88
Leak testing	B-1B mock-up and actual	2.9	To be determined from system volume—a function of the type of aerospace vehicle	Versar Test Plan
Hazard analysis	Laboratory	2.10	To be determined by the user, data report only	NASA TM-104823

1. "B-1B mock-up" means testing will be performed on the B-1B oxygen system mock-up.
2. "Actual" means verified and validated by actual aircraft.
3. "Laboratory" means that the testing will be performed in a laboratory environment prior to testing the portable OLCS.
4. LOX impact tests the materials ignition sensitivity by mechanical input in the presence of LOX. It is performed according to ASTM G86-98a.
5. The term "Orbiter" is the proper reference to the space shuttle. The National Aeronautics and Space Administration (NASA) has specified a cleanliness level that is not covered by a standard SAE APR1176 cleanliness level.
6. The particle count units in the cleanliness verification acceptance criteria refer to the level of cleanliness as reported in Table 2 of SAE ARP1176. For example, low pressure systems must be at or below Level 300. Level 300 means that there must be zero particles larger than 300 microns, 3 or fewer particles in the 250-300 micron range, and 93 or fewer particles in the 100-250 micron range. An "unlimited" number of particles under 100 microns is allowed, although the document says there are practical limits to unlimited (i.e., there cannot be excessive "silting").
7. "Constituents" refers to the presence of anything introduced into the lines during the cleaning process. For example there will not be hydrofluoroether (HFE) 7100 solvent left trapped in the system nor air or nitrogen if that is used for a final cleaning operation purge. Of course, if oxygen is used for the purge, that will still be present after refilling the system for operational test.
8. The dead areas test is to verify that solvent will not be left in the dead areas after completion of the cleaning cycle. Solvent in a dead area connected to the main body of tubing at a small connection will not have the same amount of purge gas flow along the tube surface as that in the tubing directly in the flow path. This test assured that solvent was indeed being removed and would not be present to later turn to gas and propagate to the crew member. Special test apparatus were installed into the lines to form various volumes of dead areas to assure the process removed all solvent. Six hundred ppm is the acceptable criterion for breathing gas contaminated with this particular solvent. Test results indicated much lower levels but were reported simply as passing the stated requirement.

The substrate type to be used for construction of the test cells is aluminum alloy 2024-T3. The specimens are cut-away parts of the actual oxygen line.

2.1.2 Systems to Which the Technology is Applicable

The oxygen-line cleaning system developed as a result of this project has been shown to apply to the B-1B, F-15, C-130, T-38, and F-16 aircraft. Application of this technology can be expanded to any type of plumbing system that can be cleaned using the new oxygen-line cleaning system, including hydraulic and fuel systems. Another possible alternative is use in commercial applications. The gas industry has expressed interest in using this new technology to clean medical oxygen systems installed in hospitals and medical offices. NASA has expressed interest in cleaning oxygen lines in rocket engine test cells. Warner Robins Air Logistics Center is investigating the use of the new oxygen-line cleaning system concept adapted to clean gaseous oxygen carts.

2.1.3 Replacement Material

The original concept was to utilize a solvent/surfactant mixture to clean the onboard oxygen plumbing system. Developmental testing validated that cleaning with solvent alone (HFE-7100, methoxy-nonafluorobutane, C4F90HC3) at a specified fluid flow rate cleaned as well as a solvent/surfactant mixture, HFE-7100/Krytox alcohol. As a result, surfactant was omitted from the process, which decreased the complexity of the system while making it inherently safer.

2.1.4 Theory of Operation

The theory behind the cleaning technology assumes that three factors work together to determine the effectiveness of the solvent: the solvent chosen, its concentration, and the shear stress exerted on the surface by the cleaning process. This shear stress is accomplished by assuring that the solvent is consistently flowing at 15 ft/s during the OLCS operation.

2.2 PROCESS DESCRIPTION

The OLCS is contained within a 12-ft by 7-ft internal footprint mounted on a 19-ft trailer that can easily be maneuvered alongside an aircraft. This new technology provides an environmentally friendly method of cleaning an onboard oxygen plumbing system without having to remove equipment from the aircraft. The cleaning system connects to the aircraft at the oxygen storage-vessel point, with a return line connected at termination points such as the crewmember's oxygen regulator location and emergency O_2 bottle-changing stations. Solvent is then pumped through the existing onboard plumbing system and returned back to the new OLCS for analysis, filtration, and eventual distillation for reuse. The complete cleaning cycle leak-tests, washes, rinses, analyzes, evacuates, dry-air purges, and distills the cleaning chemicals.

Figure 1 is a schematic showing the nature and operation of the OLCS. The cleaning process begins by connecting the lines on the OLCS to oxygen lines onboard the aircraft. The oxygen lines are pressurized with dry air to ensure that no significant leaks are present in the system. Prior to the OLCS, this capability was unavailable for oxygen-system maintainers for identifying leaks in oxygen systems. Leaks must be located and eliminated before the cleaning process begins. When leaks are maintained to acceptable guideline limits (established in the Versar Test

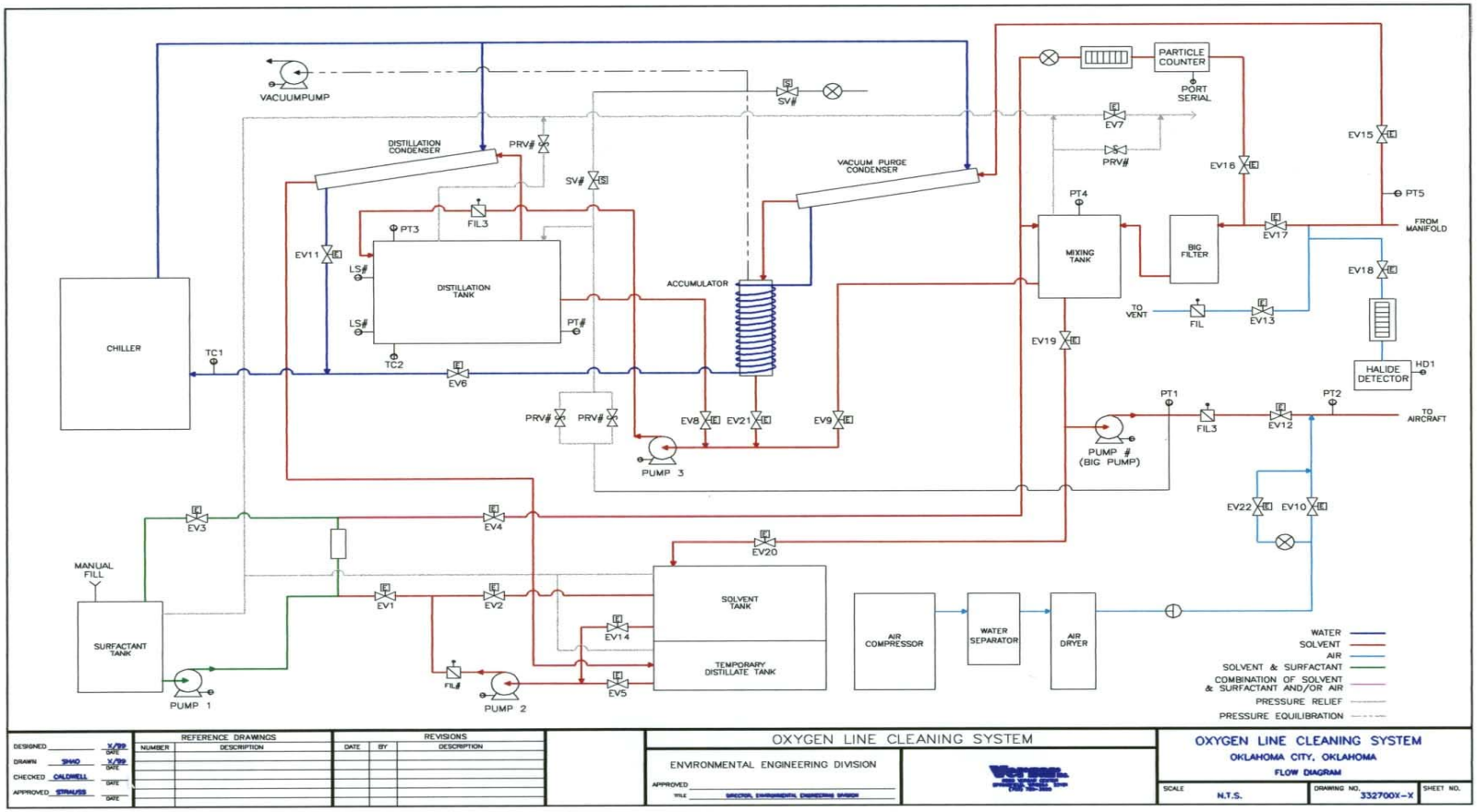

POLCS Patent Pending

Figure 1. System Schematic.

Plan at 0.50 psi/min @ 60 psig), a vacuum is applied to the aircraft. This will ensure that the solvent removal process will not be hindered. Solvent is then pumped and circulated through the oxygen lines. A filter is set up in the circulation loop to remove any particulate matter from the system. This process continues until each segment of aircraft tubing is cleaned for 5-10 minutes at a specified minimum-flow rate to obtain adequate contaminant removal. A rinse cycle removes any remaining contaminants from the oxygen lines. A sample from the rinse-cycle effluent stream is analyzed with an in-line particle counter to evaluate cleanliness. If the appropriate cleanliness level has not been achieved, the computer will initiate a series of steps to rewash the lines.

Once the oxygen lines meet the cleaning criteria, an air purge is initiated to push as much liquid out of the plumbing system as possible. After air purging is complete, a vacuum is applied to the oxygen line to vaporize the remaining solvent. The computer monitors the system pressure until it has dropped below 0.25 psia. Experiments have shown that no visible quantities of solvent remain in the system below this pressure. The computer maintains the pressure below 0.25 psia for 5 minutes before initiating the air-purge cycle for approximately 45 minutes, depending upon system volume. The air is allowed to enter a halogen detector to detect the presence of solvent in the lines. If the solvent (halogen) level is above 40 parts per million, the air is passed through the system for another 30 minutes, then re-evaluated. When the solvent level is below 40 parts per million, the cleaning process is complete.

Using a touch-screen monitor, the operator can view the cleaning cycles, the cycle time, and the cleanliness levels. If any problems occur during the process, the operator is alerted and guided (on screen) as to how to correct the problem. When the oxygen lines have been cleaned to an acceptable level, the program starts the distillation cycle to purify the solvent for reuse.

One operator can carry out this entire cleaning process in less than 4 hours for an aircraft the size of the B-1B. A longer cleaning time is required for larger aircraft with more outlets. A manifold must be constructed specifically for the number of outlets on the aircraft being cleaned to regulate the velocity of the cleaning fluid at each termination point. A CD-ROM containing software programming information will be provided for each individual aircraft type that has been validated. Each aircraft type will require validation and CD development. The CD will control the entire cleaning process to include flow velocities and distribution of the correct amount of solvent to the appropriate tanks.

2.3 PREVIOUS TESTING OF THE TECHNOLOGY

The original effort to study the capability of cleaning an entire oxygen system began in 1995. A contract was awarded to Northwest Pacific Labs to determine if a suitable, environmentally friendly chemical was available that could adequately clean oxygen-system components. HFE-7100, methoxy-nonafluorobutane (C4F9OHC3) was determined to be a suitable solvent. The next step was to develop a bench-top system that could clean an entire aircraft system. Contracts were awarded to ARINC Inc., SSAI, and Surfactant Associates to develop a bench-top prototype system capable of testing and reproducing test data. Once the bench-top system was demonstrated, work began to develop a system to clean aircraft oxygen converters, a logical starting point in cleaning the entire oxygen system.

A prototype converter cleaner was built and operational by 1997, and the technology and experience gained from this system was utilized to develop the current oxygen-line cleaning system. Additionally, as the oxygen-line cleaning system was developed, modified, and optimized, knowledge gained in its development was utilized in modifying and enhancing the original converter cleaning system.

2.4 ADVANTAGES AND LIMITATIONS OF THE TECHNOLOGY

The new process is an environmentally friendly method of cleaning with the advantage of utilizing a closed-loop system that minimizes the loss of solvent. As compared to the current oxygen-line cleaning system used for aerospace weapons systems, safer chemicals are used and lower emissions result.

Specific advantages of this new technology are as follows:

- Aircraft oxygen equipment remains clean and is not recontaminated as a result of unpacking and re-assembly.
- There are significant time and cost reductions in cleaning a contaminated oxygen system.
- The cleaning is verifiable by a defined process that did not exist with previous cleaning techniques.
- The system is a fully automated process.
- The system enhances the readiness of the military aerospace fleet.
- The system can be substituted for the current requirement for hot air purging, as the process concludes with a hot air purge.

Limitations of this new technology are as follows:

- There is an initial cost for equipment and solvent.
- Because the technology is new and replaces the practice of using solvent and rags, technicians and operators must be trained in its use.

3.0 DEMONSTRATION DESIGN

3.1 PERFORMANCE OBJECTIVES

The objective for this project was to produce a system that would clean to accepted industry standards. There were three performance objectives: cleanliness verification, functionality and operability of the OLCS. Cleanliness was determined through the use of a particle counter based on the standards above. Functionality was based on having a fully transportable, self sufficient and easily movable unit. To meet functionality objectives, this unit had to complete all phases of a cleaning operation, including purging, testing for cleanliness, and checking for leaks. Operability was based on user friendliness through the use of a touch screen monitor. The operator must be able to start the system with the touch of an icon on the screen and operate the system without constant monitoring.

Table 3 lists each test performed on the OLCS, equates it with one or more of the performance objectives, and indicates if the objectives were met. (In the table, PASS indicates that the test was passed; therefore, the performance objective was met.)

Table 3. Performance Objectives and Results.

	Cleanliness Verification	Functional	Operability
LOX compatibility test	N/A	PASS Section 4.1.1, Table 12, Final Report	N/A
Materials compatibility test	N/A	PASS Section 2.1.2.2, Table 33, JTR	N/A
Nonvolatile residue test	PASS Section 4.1.3, Table 14, JTR	N/A	N/A
Moisture test	N/A	PASS Section 4.1.4, Table 14, JTR	N/A
Dead area test	PASS Section 4.1.8, Figure 2, JTR	N/A	N/A
Leak test	N/A	PASS Section 4.1.9, Figure 4, JTR	N/A
Hazards analysis test	N/A	PASS Section 4.1.10, JTR	N/A
Functional test	N/A	PASS Section 4.1.6, JTR	N/A
Component test	PASS Section 4.1.7 and Appendix F, JTR	N/A	N/A

3.2 SELECTION OF TEST PLATFORM/FACILITY

The facilities selected as test sites for the new oxygen-line cleaning system provided maximum convenience for the U.S. Air Force. Because the OLCS had to be field tested on selected weapons systems, site-selection criteria for field demonstrations were previously identified in the JTP. Separate test sites were required since the various aircraft are not based together.

The oxygen-line cleaning system was developed at the Versar office, shop, and laboratory in Oklahoma City, Oklahoma, an industrial complex just south of Tinker Air Force Base (AFB). Government-furnished equipment allowed for the construction of a full-scale mock-up of a B-1B oxygen system, which was used for initial validation testing. All testing was conducted in the facility to verify that the cleaning system functioned and performed as designed prior to actual connection to an operational aircraft.

The initial test site for the B-1B was Tinker AFB, since the oxygen-line cleaning system was initiated for use on this aircraft. Tinker AFB is the major overhaul depot for the B-1B and home to the B-1B program office.

The second test site—Tulsa ANG Base in Tulsa—houses the F-16 aircraft. This was the preferred test location because of its proximity to Oklahoma City and the F-16s. The one negative impact of this location was that it was not the depot for the F-16; however, F-16 program office personnel attended the demonstration to fully understand the cleaning process.

The third site for the F-15 aircraft was Robins AFB, Georgia. Robins AFB is the major depot for the F-15 and home to the F-15 program office.

Additionally, as part of another program, the OLCS was demonstrated on a C-130 aircraft at the ANG base in Louisville, Kentucky.

Conditions were the same at each test site. The equipment was positioned inside a maintenance hangar at an Air Force base with an electrical power supply of 208 volts, 40 amps, and 3-phase electricity.

3.3 TEST FACILITY HISTORY/CHARACTERISTICS

This project was charged to develop a better way to clean aircraft oxygen lines; therefore, the facilities referred to are important only as test sites. Presently, all aircraft oxygen lines are cleaned only when a known problem exists because the process is so expensive, time-consuming, and of risk to the environment. The current cleaning method results in emissions of ozone-depleting substances. Typical onboard oxygen-line contaminants include Zeolite, dirt or dust particles, and NVR substances. There is enough Zeolite present to leave the faces of aircrew members white from the dusting. Further testing outside the parameters of this project would be required to determine the extent to which crew members inhale the Zeolite dust.

3.4 PHYSICAL SETUP AND OPERATION

First, a full scale mock up of a B-1B oxygen-line system was produced. Testing was initiated on the OLCS by setting up 208v, 3-phase, 60-cycle electricity and water, and furnishing clean, dry air from an air compressor that is an integral part of the prototype. In the test phase (proof of concept), certain parts of an oxygen line were contaminated, placed back in the line, cleaned using the prototype system, removed, and inspected using an optical microscope for cleanliness results. Later, in the validation phase, the prototype was attached to an aerospace vehicle oxygen system. The system performed as anticipated, with only one individual required to perform the cleaning process. In the prototype system, a particle counter and halogen leak detector ensured that the oxygen system had been cleaned to accepted industry and military standards. This prototype used a closed-system process that automatically recycled and regenerated the fluid for re-use.

3.5 SAMPLING/MONITORING AND ANALYTICAL PROCEDURES

Testing procedures for cleaning demonstrations performed on actual aircraft entail a laboratory analysis of contaminants captured in the filter of the prototype oxygen-line cleaning system. Laboratory analysis consisted of visible light microscopy, infrared (Fourier transform-infrared [FT-IR]), X-ray spectroscopy and fluorescence spectroscopy, as appropriate for individual analysis performed. Laboratory tests were qualitative in nature. Quantification was not considered feasible.

For additional information, see Appendix A of the JTP and Appendix C of the Test Plan and Procedures.

This page left blank intentionally.

4.0 PERFORMANCE ASSESSMENT

4.1 PERFORMANCE DATA

Testing validated the effectiveness of the oxygen-line cleaning prototype, proved its environmental acceptability, validated the discovery of a cost-effective alternative to CFC-113 (Freon), and proved that the oxygen-line cleaning system is a cost-effective method for onboard cleaning of aircraft oxygen systems.

Performance data relating test results with the three overall performance objectives of cleanliness verification, functionality, and operability are outlined in Table 3 of this report. Comprehensive results of the testing performed in accordance with the JTP, or any deviations thereof, are summarized in a JTR for Validation of Alternatives to Ozone Depleting Chemicals Used in Oxygen Line Cleaning. A summary of those results, including highlights, any deviations from expectations, and conclusions, follows.

Cleanliness Verification Test

These tests were intended to provide the most thorough verification of the cleaning capabilities of the new oxygen-line cleaning system. The JTP states that this test determines the cleanliness level of a test article by determining particle counts, NVR, and surface particulate verification by using a scanning electron microscope (SEM). However, certain modifications had to be made.

Visual verification of cleanliness was recorded using digital photos of each test coupon. These photos were taken before contamination, after contamination, and after cleaning. These photos are included in Appendix E of the JTR.

The particle count testing of the effluent stream was another modification to the cleanliness verification test. More direct methods of cleanliness verification were developed and used for this test. Test deviations can be reviewed in Section 2.1.2.4 of the JTR.

When using the B-1B mock-up, researchers tested the particle count using a metal coupon cut from the oxygen line. The metal coupon was marked to ensure comparison region of interest, cleaned, weighed, photographed to verify the existence of any contaminants, contaminated, re-weighed, then photographed again. The procedure was then repeated to verify the thoroughness of coupon cleaning. Results from demonstrations performed on actual aircraft included laboratory analysis of contaminants captured in the filter of the OLCS. Laboratory analysis consisted of visible-light microscopy, Infrared (FT-IR), X-ray spectroscopy and fluorescence spectroscopy, as appropriate. Laboratory tests were qualitative; quantification was not considered feasible.

Functional Test

To meet the functionality objective, the unit was designed to be fully transportable, self sufficient, and easily movable. Photos (Figures 2 and 3 in this report) show that the unit is similar in size to typical hangar carts.

After demonstrating the oxygen-line cleaning system on a portion of the oxygen lines on a C-130 aircraft, the LOX converter was charged, regulators were re-installed, and masks were connected to the regulators. Government representatives breathed through the masks for several minutes to test the quality of the oxygen flowing through the lines that had been cleaned. No noticeable odors were detected.

The complete cleaning and solvent-purging process was performed on the B-1B mock-up numerous times before the line-cleaning system was used on an actual aircraft. Government specialists inspected each available system component to determine if function had been compromised in any way. No noticeable changes to component function were observed after multiple cleaning processes.

Figure 2. Versar, Inc.'s Oxygen-Line Cleaning System.

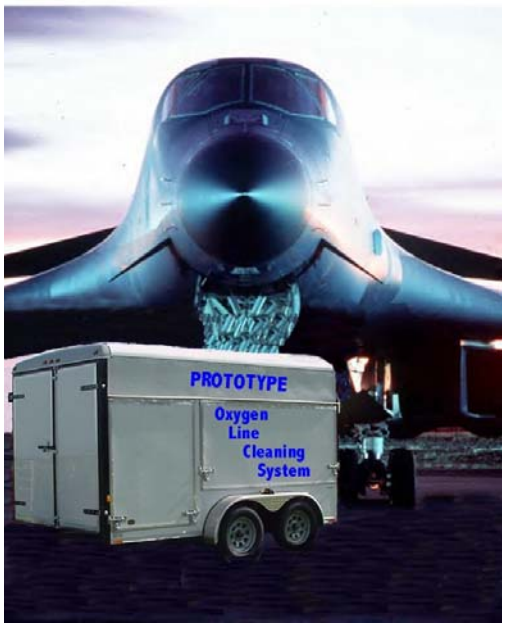

Figure 3. Front of B-1B with Versar, Inc.'s Oxygen-Line Cleaning System.

Operability Testing

Operability was based on user friendliness through the use of a touch-screen monitor. The unit has a working touch-screen monitor and can be operated by one individual rather than a team of people using solvents and rags.

LOX Compatibility (LOX Impact Test)

The JTP required that this test procedure follow ASTM G86-98a *Standard Test Method for Determining Ignition Sensitivity of Materials to Mechanical Impact in Ambient Liquid Oxygen and Pressurized Liquid and Gaseous Oxygen Environments*, approved September 10, 1998. A summary of this test procedure is available in Section 2.1 of the JTP. HFE-7100 was also subjected to a high-pressure autogenous ignition test.

All LOX compatibility tests show that HFE-7100 met all acceptance criteria, is capable of precision cleaning, and is the preferred method because it simplifies the cleaning process by eliminating surfactant mixing, and verification of removal is built into the system. Reference Section 4.1.1 of the JTR for complete results.

Materials Compatibility Test

The materials compatibility test ensures that the cleaning process will not damage any aircraft or system component. The original list of materials to be tested is given in Table 3 of the JTP. Following testing, there was no visible or permanent evidence of substrate deterioration for any samples; therefore, HFE-7100 passed the test requirements for each tested material. Results of the material compatibility testing are found in Table 13 of the JTR.

The testing procedure within the JTP also required that a gas chromatograph (GC) be used to analyze the cleaning solution samples used to soak the tested materials. The chromatograms are listed in Appendix C of the JTR. The resulting chromatograms were inconclusive and did not prove material compatibility; therefore, no further GC testing was done. Reference Section 2.1.2.2 of the JTR.

Moisture Tests

The presence of moisture in the oxygen-distribution tubing of an aircraft presents a very serious danger. This moisture may freeze at high altitudes and cause critical valves and sensors to malfunction. Therefore, it is necessary to check the solvent drum for moisture content prior to using it for cleaning or for testing.

The acceptable level of moisture in the cleaning solvent was set at 60 ppm of water. 3M Corporation, manufacturer of HFE-7100, provided moisture-test data. The test results showed that OLCS met and exceeded the specified acceptance criteria. (Results are given in Table 15 of the JTR.) HFE-7100 had a moisture content of just 8 ppm and 7 ppm, well below the acceptable level.

NVR Testing

The purpose of the NVR tests was to provide a qualitative determination of how well the oxygen lines were cleaned by using a relative comparison of the NVR before and after cleaning. Refer to Section 2.3 of the JTP. Deviations from the test procedure provided in the JTP were necessary to acquire appropriate data. These modifications are discussed in Section 2.1.2.3 of the JTR. A description of the test method is outlined in Appendix D of the JTR.

Results from the NVR tests are found in Table 14 of the JTR. Of the 14 trials conducted, nine resulted in a cleanliness level of 99% or greater. All but one trial showed that the OLCS produced oxygen lines that were at least 95.28% clean. Again, most NVR trials obtained results that exceeded 99%.

Component/Model/System Replica Test

The purpose of this test was to verify the capability of the cleaning process on a B-1B mock-up system prior to actual platform testing. A number of test cells, as well as dead areas, were plumbed into the B-1B mock-up at various points in the system. This was to verify that each section of tubing would be exposed to an adequate solvent flow rate for proper cleaning and that all traces of solvent were removed from the system. No solvent leaks or other irregularities were observed during the cleaning process. Adequate solvent flow was obtained at each section of tubing with no trace of solvent being observed in the dead areas after the solvent purging process was complete.

Dead Areas Test

This test is designed to identify redeposition areas to assure that all chemicals have been removed after cleaning is complete.

Several modifications were made to the testing procedures stated in Section A.1.7 of the JTP. These modifications are discussed in Section 2.1.2.6 of the JTR. The modified test procedures are in Appendix G of the JTR and show that, after the halide-detector testing, dead space was removed and visually inspected. No trace of HFE-7100 was present in the dead-space volume after evacuation.

Leak Testing

This test ensures that no significant leaks are present in the oxygen line system. The leak test procedure is listed in Section A.1.9 of the JTP. Results from the test are available in Section 4.1.9 and Appendix H of the JTR. The new oxygen-line cleaning system was operated under normal conditions (fluid pressures up to 200 psia) and no leaks were detected under close observation. It was decided that for the B-1B mock-up, the leak rate tolerance could be set higher—at least as high as 0.75 in. Mercury (Hg) vacuum loss over 10 minutes—and still prevent solvent loss.

Hazard Analysis

The JTP states that the hazard analysis will provide the user with acceptable operation limits in association with the oxygen-line cleaning device. No specific test procedure is discussed in the JTP. Instead, the JTP says that "a test methodology developed by the NASA Johnson Space Center White Sands Test Facility and consistent with ASTM methods will be used for this analysis." Refer to Section 2.10 of the JTP. The JTP also stresses the importance of considering any increased risk for fire and/or explosion when using a solvent in an oxygen-rich environment.

Extensive testing has proven that HFE-7100, the cleaning product of choice, is nonexplosive in a pure oxygen environment and is unable to sustain a fire under normal operating conditions.

Additional Testing

The relative solvency of three different cleaning solutions was compared using various NVRs, both with and without particulate contamination (Arizona road dust). The three cleaning

solutions were: pure HFE-7100; a 0.05 wt.% mixture of Krytox alcohol in HFE-7100; and pure AK-225G, a reformulated version of AK-225 manufactured by Asahi Glass Co. for use by the military as an oxygen-compatible solvent. These tests were performed under no-flow conditions. In some cases, the AK-225G proved to be a more aggressive solvent; however, in others, HFE-7100 removed somewhat more contaminant. Results of these no-flow studies are in Appendix D of the JTR. A limited number of high-flow cleaning tests were also performed using the AK-225G. Various NVRs mixed with Arizona road dust were used as contaminants. These results are also in Appendix D of the JTR.

4.2 PERFORMANCE CRITERIA AND DATA EVALUATION

In addition to being an environmentally friendly technology, all collected test data shows that the use of HFE-7100 in conjunction with the new oxygen-line cleaning system provides better cleaning. It has also proved to be a more cost-effective process than the current line cleaning procedure that utilizes CFC-113.

Two of the three cleanliness verification methods required by the JTP were indirect measurement techniques. Obtaining low particle counts from the effluent solvent stream simply shows that the solvent is no longer cleaning the oxygen lines, not that the lines are cleaned effectively. The NVR testing method confirms removal by accounting for all of the NVR in the cleaning solution and the filters. Because this does not involve direct observation of the lines that were cleaned, this has proven to be a difficult task for such a large system.

A direct method of cleanliness verification was used in all of these tests. This method involved measuring the quantity of contamination removed from the test cell compared to what was inserted into the lines that were cleaned. This data can be used to develop a process (i.e., a minimum solvent flow rate used to clean a certain size line for a minimum amount of time) that guarantees cleanliness based on prior studies of known contaminant types and quantities in aircraft tubing. However, the error associated with weighing relatively small test coupons on the available electronic scale results in imprecise values for both NVR and particulate removal.

There are a number of ways to improve the measurement of NVR and particulate quantities on the inner surfaces of the oxygen tubing. Optical probes may be used to measure the density and thickness of a specific NVR or particulate layer on the aluminum surface. Also, a larger test coupon area combined with a more accurate scale will reduce the error associated with calculating the quantity of NVR and particulate contamination remaining in the tubing test cell after the line cleaning process.

The conclusion is that it is verification that a specific process is followed that will best verify cleanliness of aircraft oxygen lines. The automated nature of the OLCS is verification that the process is followed. Particle counting and halide detection simply provide additional confidence.

4.3 TECHNOLOGY COMPARISON

There are no other existing technologies to compare to this technology. Current cleaning methods employ only a manual method of cleaning, which entails disassembly of the aircraft plumbing system. This manual method requires that each component of the oxygen-line system be cleaned with a CFC-113 rinse. It is very doubtful that all oxygen lines can be accessed for

removal by this cleaning process. There are no consistently applied cleaning or verification processes with this outdated manual method.

By comparison, it will cost approximately $2,000 and one operator to clean the aircraft oxygen-line plumbing system using the new technology. The oxygen-line plumbing system in an aircraft the size of a B-1B can be cleaned in less than 4 hours. There is no information available as to the exact cost or length of time the current manual cleaning method requires; however, it is easy to estimate that the manual system is neither efficient nor cost effective. By comparison, the proposed new oxygen-line cleaning system—which utilizes a 12-ft by 7-ft housing that efficiently cleans the entire plumbing system without disassembly and without the use of ozone-depleting chemicals—should be a major benefit.

5.0 COST ASSESSMENT

5.1 COST REPORTING

This cost-benefit analysis (CBA) was performed using the Environmental Cost Analysis Methodology (ECAM[SM]). ECAM was developed to provide users with a consistent and accurate tool for conducting economic analyses, especially where new environmental technologies are being considered. ECAM integrates activity-based costing concepts and provides standard economic indicators, including net present value (NPV), payback period, and internal rate of return (IRR).

- NPV is the project's present value of all future cash flows less the initial cost. Projects with a positive NPV have cash flows in excess of the initial investment (i.e., the difference between the cash inflows and cash outflows is greater than zero).

- The payback period (P/B) is the length of time required to recoup the initial investment. (P/B = initial capital investment/annual cash flow.) Simple P/Bs do not consider the time value of money.

- The IRR is the discount rate at which the investment's NPV equals zero. The corresponding acceptance criterion against which to compare the IRR is the opportunity cost of capital to the organization. If the investment's IRR exceeds the opportunity cost of capital, the investment is attractive, and vice versa.

As shown in Figure 4, ECAM uses a four-step approach that may be applied at both the facility and the process level.

5.2 COST ANALYSIS

Four aircraft types were evaluated to further explore the potential benefit of implementing the OLCS. These aircraft were chosen based on three criteria: 1) Information regarding maintenance procedures (particularly with respect to the oxygen system, regulators, and converters) would be readily available; 2) The aircraft had previously been part of the demonstration conducted under the JTP, or the aircraft maintenance personnel had been present at one of the demonstrations and had voiced an interest in the OLCS; 3) The number of aircraft currently in service within the U.S. Air Force (USAF) could be determined and quantified.

In addition to the previously noted criteria, the following assumptions have been made, which pertain to the cost analyses outlined in Tables 3-8.

- Four OLCS units will be purchased (one unit for each aircraft).

ECAM [SM] is a service mark of Concurrent Technologies Corporation, Johnstown, Pennsylvania.

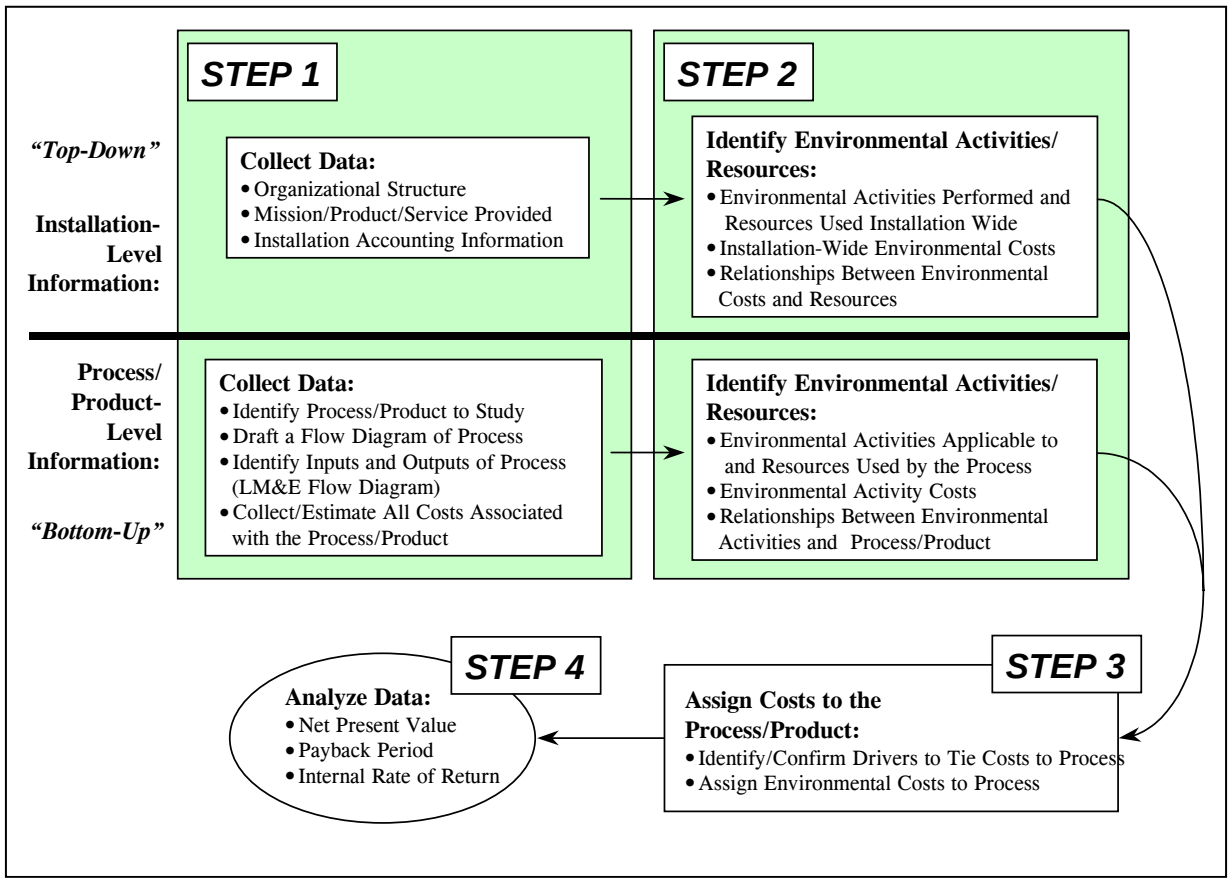

Figure 4. ECAM Methodology Flow Diagram

- The units will be housed at the respective depots where program depot maintenance (PDM) operations are performed on each aircraft type.
- It is assumed that the PDM is performed every 6 years for each aircraft.
- The use of the OLCS will take the place of the hot-air purge that would be conducted during the PDM.
- The OLCS and the hot-air purge procedure both require 4 hours to complete.
- Using the OLCS should ensure a cleaner oxygen system; therefore, the aircraft should experience a 25% reduction in regulator and converter failures. (This information came from the depots.)
- The cleaning solution used in the OLCS will be HFE 7100, a non-ozone-depleting solvent.

- Initial capital investments include the OLCS unit, software to run the OLCS system program specifically for each aircraft type, and an initial charge for HFE 7100 cleaning solution.

- The HFE 7100 will be purchased in 55-gallon drums through standard Defense Logistics Agency (DLA) price lists.

- All environmental management costs will be eliminated with respect to HCFC-141b and CFC-113.

- The removal of an oxygen regulator takes 0.5 hours.

- The removal and replacement of an oxygen converter takes 2.0 hours.

- All regulator and converter costs are in accordance with standard DLA pricing as provided by Tinker AFB Oxygen Shop.

- All aircraft numbers are based on those reported in the USAF Almanac, 2003.

- Aircraft maintenance numbers are for the year 2002.

In order to document and evaluate the OLCS's potential impact on the maintenance costs, site visits were conducted to Tinker AFB and Eglin AFB. Also, personnel from the subject aircraft program offices and applicable flight-line personnel were contacted and interviewed to further understand and document the potential impact the OLCS may have on the weapon systems.

5.3 COST COMPARISON

A full-scale evaluation/study of the quantities of HCFC-141b and CFC-113 could not be performed under this task. However, it is assumed that the new OLCS will eliminate the use of these ozone-depleting chemicals (in accordance with the Environmental Protection Agency [EPA] regulations) with respect to oxygen-cleaning activities. In addition, the affected shops will experience a reduction in the environmental reporting requirements associated with CFCs and HCFCs. However, due to the potential for other processes requiring these ozone-depleting potentials (ODS), no cost savings have been figured for this reduction in reporting requirements.

Table 4 contains the initial capital investment that is viewed as a "sunk cost" under the ECAM guidelines. The capital costs included in this table are the OLCS, appropriate software, training, and an initial charge for the HFE 7100 cleaning solution. It has been assumed that one OLCS will be required for each of the four aircraft types and will be stationed at the appropriate depot for use during scheduled PDM.

Table 4. Initial Capital Investment Made for Each of the Four Aircrafts.

Aircraft	Initial Capital Investment ($)
F-15	325 K
F-16	325 K
C-130	376 K
T-38	325 K

Tables 5 and 6 contain the equipment costs for regulator and oxygen-converter replacements as reported by Tinker AFB for the year 2002. These tables include both scheduled and unscheduled replacements as well as the potential cost savings associated with a conservative 25% reduction in failures upon implementation of the OLCS. These numbers do not include the labor associated with the removal and replacement of the equipment, although the cost associated with these activities was accounted for in the ECAM total project costs.

Table 5. Regulator Scheduled and Unscheduled Equipment Cost with Potential Cost Savings.

Aircraft	Regulator Removals (2002)	Replacement Cost (2002) ($)	Unscheduled Replacement (2002)	Unscheduled Replacement Cost (2002) ($)	25% Reduction in Replacements	Potential Cost Savings (1 year) ($)
F-15	230	2.57 M	225	2.52 M	56	650 K
F-16	167	1.87 M	165	1.84 M	41	459 K
C-130	762	2.88 M	588	2.22 M	147	722 K
T-38	130	491 K	N/A	N/A	N/A	125 K

Table 6 contains the converter removals and the associated costs for those removals and replacements. Converter removal and replacement values were not available for the T-38 and have not been included in Table 6. This lack of information will skew the estimated payback period for the T-38 trainer aircraft; however, a payback period of less than 3 years is still anticipated.

Table 6. Converter Scheduled and Unscheduled Equipment Cost with Potential Cost Savings.

Aircraft	Converter Removals (2002)	Replacement Cost (2002) ($)	Unscheduled Replacement (2002)	Unscheduled Replacement Cost (2002) ($)	25% Reduction in Replacements	Potential Cost Savings (1 year) ($)
F-15	356	1.25 M	351	1.24 M	89	315 K
F-16	339	1.19 M	332	1.17 M	83	292 K
C-130	163	325 K	152	303 K	38	75 K
T-38	NA	NA	N/A	N/A	NA	NA

The NPV, as reported by the ECAM software (P2 Finance™), is shown in Table 7 for year(s) 0-1, 0-5, 0-10, and 0-15. For all aircraft under study (with the exception of the T-38), the NPV is

positive by the end of year one. Note that converter removal and replacement data were not available for the T-38 aircraft and cannot be included in the cost benefit analysis.

Table 7. Net Present Value.

Aircraft	0-1 Years ($)	0-5 Years ($)	0-10 Years ($)	0-15 Years ($)
F-15	600 K	4.01 M	7.84 M	11.12 M
F-16	446 K	3.32 M	6.48 M	9.21 M
C-130	415 K	3.36 M	6.61 M	9.42 M
T-38	(199 K)	268 K	783 K	1.22 M

The IRR has been calculated and provided in Table 8 for years 0-1, 0-5, 0-10, and 0-15. Again, all values (with the exception of the T-38) are positive at the end of year one. As with the NPV values, it is assumed that the T-38 analysis would also show positive values at the end of 1 year if converter removal and replacement data were available.

Table 8. Internal Rate of Return.

Aircraft	0-1 Years (%)	0-5 Years (%)	0-10 Years (%)	0-15 Years (%)
F-15	192.8 %	292.5 %	292.8 %	292.8 %
F-16	144.1 %	243.6 %	244.1 %	244.1 %
C-130	116.2 %	215.5 %	216.2 %	216.2 %
T-38	NA	28.4 %	38.2 %	39.5 %

Table 9 contains the expected payback periods (in years) for the four aircraft reviewed under this cost analysis. The F-15, F-16, and C-130 aircraft all show a payback period of less than 0.5 years. The T-38's payback period is under 3 years (2.65). If the converter removal and replacement data becomes available for the T-38, it is assumed that it too would follow the same trends as the F-15, F-16, and C-130 (approximately $264 per aircraft per year in converter removals due to contamination). This figure combined with the 800 T-38 aircraft in-service (as noted in the USAF Almanac) would reduce the T-38 payback period from 2.65 years to just under 1 year.

Table 9. Payback Period in Years.

Aircraft	Payback (years)
F-15	0.35
F-16	0.42
C-130	0.48
T-38	2.65

In addition to the previously noted cost savings and benefits the OLCS units provide with respect to cleaning aircraft oxygen lines, the units can also be used in conjunction with cleaning liquid and gaseous oxygen service carts. Although not quantified in this report, depots should easily realize this benefit during standard maintenance cycles as the carts would operate much the same way that current hot-air purge units operate, and in an equal amount of time.

Based on the previously presented figures, data, and assumptions, it appears that a favorable cost advantage would be experienced beyond a reasonable doubt with the implementation of the OLCS. However, due to lack of long-term testing conducted to date, further evaluation of the OLCS is recommended to verify that the assumptions noted in Section 5.0 of this report will hold true.

The new OLCS should reduce the cost of equipment and labor and eliminate the production of hazardous waste attributed to cleaning oxygen line systems and equipment. PDM cycles pertaining to oxygen-line cleaning activities will be eliminated, and with them the associated costs and potential health risks.

6.0 IMPLEMENTATION ISSUES

The OLCS was successfully demonstrated and tested at multiple facilities and on multiple aircraft. Air Force-wide implementation of the OLCS units will require few if any changes to current practices. In addition, minimal training will be required because the units are completely computer-based, and software will be developed for all aircraft on which the OLCSs are to be used.

6.1 SCALE-UP

With the exception of operator training, there will be no process deviations from demonstration to full-scale operations.

6.2 OTHER SIGNIFICANT OBSERVATIONS

Due to the lack of flight-line data and experience with the OLCS in production situations, it is expected that further evaluation will be required to validate the educated assumption of a 25% decrease in regulator and converter failures due to contamination. Evaluation should entail the cleaning of many specified aircraft and continued monitoring of the aircraft for contamination-related failures. Data from this study should then be compared to that of non-OLCS-cleaned aircraft to validate the effectiveness of the OLCS unit. This data will also serve to further validate the potential for increased mission readiness by allowing aircraft to remain in service longer thereby increasing the mean time between regulator and converter failures. Further evaluation could also serve to lessen concerns regarding the initial capital investment required to implement the OLCS.

Based on the maintenance data provided, as well as the potential for increased regulator and converter performance, it must be assumed that implementation of the OLCS unit would increase mission readiness, reduce the mean time between failures for both the regulators and converters, reduce hazardous material usage and waste produced, and reduce the overall operating costs for the affected depots.

6.3 LESSONS LEARNED

As with all new technologies, it is important to document and share lessons learned to prevent similar errors in planning and implementation in the future. The following are lessons learned as a result of this project:

- Due to unexpected developments, the program took longer to complete than originally anticipated.

- Due to trade secrets and mission security involved with aircraft readiness, it is difficult (or impossible) to obtain potentially sensitive information regarding aircraft maintenance issues and cycles.

- Initial concepts will change with the course of development and may require modifications to the project. This was done to replicate the true need of the motivating problem and to accomplish the intended goal in a timely manner.

- Unanticipated personnel changes have a drastic effect on the program over the course of a 4-year project. Personnel changes occurred on both the government and contractor side of the project, and experience has shown that the budget should allow for personnel changes.

- The Environmental Security Technology Certification Program (ESTCP) office was exceptionally responsive to the developmental arena and fully understanding of the programmatic changes. Inform them as early as possible of any anticipated programmatic or budgetary changes.

- Technical descriptions described in equipment catalogs can be misleading. Much of the equipment ordered for the prototype did not perform to specifications that were listed in the parts catalogs. Also, delays in shipments from some vendors impacted the project timeline.

- Ensure that funding is requested for implementation as well as development. Implementation is a difficult and time-consuming process that can take longer than originally anticipated.

6.4 END-USER/ORIGINAL EQUIPMENT MANUFACTURER (OEM) ISSUES

There is no current requirement that a full-system cleaning be performed on military aircraft during production or PDM throughout the aircraft lifespan. Currently, only hot-air purges are performed as routine maintenance to assure that any moisture accumulated in the oxygen supply lines is removed. Until now, oxygen lines could not be cleaned without disassembly of the entire aircraft oxygen system. Cleaning aircraft oxygen lines with this new technology represents a new methodology in oxygen-line maintenance, and the responsibility for implementing any new requirement rests with the individual program offices.

6.5 APPROACH TO REGULATORY COMPLIANCE AND ACCEPTANCE

This new technology successfully replaces ozone-depleting chemicals that have been banned according to the Clean Air Act, a congressional mandate, and international agreements.

Currently, the contaminants and particulates within the oxygen systems of aircraft pose significant hazards to both aerospace vehicles and personnel. Hydrocarbon contaminates and particulates, impinging on surfaces from gas streams of pure or highly concentrated oxygen, can be sources of ignition and have been identified as possible sources of fires on military vessels and aerospace vehicles. Such particulates also pose significant threat to the health of personnel as emphasized in EPA's revised guidelines for particulate matter.

The new OLCS technology generates no volumetric waste. Waste disposal consists of filter socks and residual sludge from the chemical distillation process. These filter socks contain no hazardous material and can therefore be disposed of in a landfill. Residual sludge may contain certain oils removed from the aircraft oxygen lines, but the amount is minimal and can be disposed of along with other industrial waste.

7.0 REFERENCES

1. National Defense Center for Environmental Excellence. 1999. Environmental Cost Analysis Methodology (ECAM) Handbook, March 29, 1999. http://www.estcp.org.

2. P2/FINANCE, version 3.0. Copyright 1996. Pollution Prevention Financial Analysis and Cost Evaluation System. Tellus Institute, Boston, MA. http://www.tellus.org .

3. Office of Management and Budget. 2000. Circular Number A-94, Appendix C (revised January 2000). Discount Rates for Cost-Effectiveness, Lease Purchase, and Related Analyses. http://www.whitehouse.gov/OMB/circulars/a094/a094.html.

4. National Defense Center for Environmental Excellence (NDCEE) for the Engineering and Technical Services for Joint Group on Pollution Prevention (JG-PP). 2001. Final Joint Test Protocol (JTP) for Validation of Alternatives to Ozone-Depleting Chemicals Used in Oxygen-Line Cleaning. J-99-CL-015-P1. July 24, 2001.

5. Concurrent Technologies Corporation for Engineering and Technical Services for Joint Group on Pollution Prevention (JG-PP) Projects. 2002. Joint Test Report (JTP) for Validation of Alternatives to Ozone-Depleting Chemicals Used in Oxygen-Line Cleaning. J-99-CL-015-R1. September 4, 2002.

6. United States Air Force Almanac 2003. Air Force Magazine. May 2003. http://www.afa.org/magazine/May2003/USAF_Almanac_2003.pdf.

This page left blank intentionally.

APPENDIX A

POINTS OF CONTACT

Point of Contact Name	Organization Name Address	Phone/Fax/email	Role in Project
Mr. Jerry Gore	OC-ALC	405-739-8533	Tinker AFB Contact
Mr. Terry Caldwell	Versar, Inc.	405-739-0062	OLCS Operation
Mr. Thomas Whittle	Oxygen Shop, Eglin AFB	850-882-2576	Flight Line Maintenance, F-15
Mr. Randy Holmes	Tulsa ANG	662-434-2462	T-38 Maintenance
Mrs. Carol Costello	F-15 Program Office WR-ALC	Carol.Costello@robins.af.mil	F-15 Maintenance/PDM Operations
Mr. Jerry Strauss	Versar, Inc.	STRAUJER@versar.com	Project Manager
Mr. Reginald White	F-16 Program Office Ogden ALC	937-255-5812	F-16 PDM Contact
Ms. Linda Willis	HQ AFMC/LGPE	937-656-3679	JG-PP Working Group Contact
Ms. Erin Binder	3M Corporation	651-736-3958	HFE 7100 Industry Contact
Mr. Ron Patun	Concurrent Technologies Corporation	814-269-2719	JG-PP Program Coordinator
Mr. David Markowski	Concurrent Technologies Corporation	412-992-5357	JG-PP Project Coordinator
Mr. Jerry Mongelli	HQ AFMC/LGPE (CTC)	937-257-7693	ESTCP Technical Monitor

ESTCP Program Office

901 North Stuart Street
Suite 303
Arlington, Virginia 22203

(703) 696-2117 (Phone)
(703) 696-2114 (Fax)

e-mail: estcp@estcp.org
www.estcp.org