ESTCP
Cost and Performance Report

(CP-9807)

A Continuous Emissions Monitor for Hazardous Air Pollutant Metals

February 2001

ENVIRONMENTAL SECURITY
TECHNOLOGY CERTIFICATION PROGRAM

U.S. Department of Defense

TABLE OF CONTENTS

Page

1.0 EXECUTIVE SUMMARY 1

2.0 TECHNOLOGY DESCRIPTION 5
- 2.1 BACKGROUND PROBLEM 5
- 2.2 TECHNOLOGY DEVELOPMENT 6
- 2.3 SAMPLING INTERFACE 7
- 2.4 BACKGROUND INTERFERENCE CORRECTION 10
- 2.5 SYSTEM OPERATION 10
- 2.6 COMPETING TECHNOLOGIES 11
- 2.7 ADVANTAGES AND DISADVANTAGES 11

3.0 DEMONSTRATION DESIGN 13
- 3.1 GENERAL INFORMATION 13
- 3.2 TOOELE ARMY DEPOT DEMONSTRATION 14
  - 3.2.1 Performance Objectives 14
  - 3.2.2 Tooele Facility Background/Description 14
  - 3.2.3 Physical Setup and Operation at Tooele Army Depot 16
  - 3.2.4 Monitoring Procedures 18
  - 3.2.5 Analytical Procedures 18
- 3.3 RETECH CORPORATION MANUFACTURING FACILITY DEMONSTRATION 18
  - 3.3.1 Performance Objectives 18
  - 3.3.2 Retech Corporation Manufacturing Facility Background/ Description 18
  - 3.3.3 Retech Corporation Manufacturing Facility - Physical Setup and Operation 19
  - 3.3.4 Monitoring Procedures 20
  - 3.3.5 Analytical Procedures 21

4.0 PERFORMANCE ASSESSMENT 23
- 4.1 APE MUNITIONS DEACTIVATION INCINERATOR AT TOOELE ARMY DEPOT 23
- 4.2 PAHWTS FIT TEST AT RETECH CORPORATION MANUFACTURING FACILITY 24

5.0 COST ASSESSMENT 29
- 5.1 TOOELE ARMY DEPOT DEMONSTRATION/VALIDATION EXERCISE 29
- 5.2 PAHWTS (RETECH CORPORATION) DEMONSTRATION/ VALIDATION EXERCISE 30
- 5.3 IMPLEMENTATION COST CONSIDERATIONS 30
  - 5.3.1 Potential for Payback on MMCEMS Capital Cost 32

TABLE OF CONTENTS (continued)

Page

6.0 IMPLEMENTATION ISSUES 33
6.1 COST OBSERVATIONS 33
6.2 PERFORMANCE OBSERVATIONS 33
6.3 OTHER SIGNIFICANT OBSERVATIONS 33
6.4 REGULATORY AND OTHER ISSUES 33
6.5 LESSONS LEARNED 34
6.6 END-USER ISSUES 34

7.0 REFERENCES 37

APPENDIX A: Points of Contact A-1

LIST OF FIGURES

Page

Figure 1. Construction of the Shrouded Probe 8
Figure 2. Schematic Diagram of the MMCEMS Sampling System 9
Figure 3. Sub-Sample Extraction 9
Figure 4. Production APE 1236 M1 Hazardous Waste Incinerator 15
Figure 5. Tooele Army Depot 16
Figure 6. Illustration of PAHWTS Layout 19

LIST OF TABLES

Page

Table 1. Detection Limits for the MMCEMS 6
Table 2. Results of the Relative Accuracy Test Audit 23
Table 3. Comparative MMCEMS and Method 29 Results 25
Table 4. Itemized Cost Estimate for Demonstration/Validation Exercise: Operation of the MMCEMS at Tooele Army Depot 29
Table 5. Itemized Cost Estimate for Demonstration/Validation Exercise: Operation of the MMCEMS at Retech Facility (PAHWTS) 30

LIST OF ACRONYMS

ADAC	Army Defense Ammunition Center
APE	Ammunition Peculiar Equipment
BAF	Bias Adjustment Factor
CAD	Cartridge Actuated Device
CRADA	Cooperative Research and Development Agreement
DNT	Dinitrotoluene
EMC	Emissions Measurement Center
EPA	Environmental Protection Agency
FIT	Factory Integration Testing
HAP	Hazardous Air Pollutant
HCB	Hexachlorobenzene
ICP	Inductively Coupled Plasma
ICP-AES	Inductively Coupled Plasma Atomic Emission Spectrometry
ICP-MS	Inductively Coupled Plasma Mass Spectrometry
MACT	Maximum Achievable Control Technology
MIDAS	Munitions Items Disposition Action System
MMCEMS	Multimetals Continuous Emissions Monitor System
NAWCWD	Naval Air Warfare Center Weapons Division
NG	Nitroglycerin
NPT	Nominal Pipe Thread
OAQPS	Office of Air Quality Planning and Standards
OSHA	Occupational Health and Safety Administration
PAD	Propellant Actuated Device
PAHWTS	Plasma Arc Hazardous Waste Treatment System
RATA	Relative Accuracy Test Audit
RF	Radio Frequency
RM	Reference Method

TACOM-ARDEC	Tank-automotive and Armaments Command, Armament Research Development and Engineering Center
TEAD	Tooele Army Depot
TJA	Thermo Jarrell Ash
TSCA	Toxic Substances Control Act
USACHPPM	U.S. Army Center for Health Promotion and Preventative Medicine

ACKNOWLEDGMENTS

The authors wish to express their thanks to the following individuals who helped ensure the success of this project.

- Mr. John Bosch and Mr. Tom Logan of the EPA Office of Air Quality Planning and Standards, Emissions Measurement Center.
- Mr. Bruce Sartwell, Naval Research Laboratory.
- Mr. Darwin Jones, Mr. Dee Russell, Mr. Dave Woodworth, Mr. Ron Snyder, Mr. Bob Anderson, Mr. Doug Nielson and Dr. Jay Bishop from Tooele Army Depot.
- Mr. Mike Pattison, Mr. Bob Wishart, Mr. Don Keesee and Mr. Emery Thompson of the U.S. Army Center for Health Promotion and Preventive Medicine.
- Dr. Gary Meyer and Mr. Geoff Coleman from TJA Solutions, Inc.
- Mr. Jerry Parkin and Mr. Rick Page from the Utah Department of Environmental Quality, Division of Solid and Hazardous Waste.

Special thanks to Mr. Jim Wheeler, Defense Ammunition Center, Dr. Jeffrey Marqusee and Dr. Robert Holst for their support, and thanks to the ESTCP Program Office and ESTCP support contractors.

Principal Investigator: NAWCWD	Dr. Michael D. Seltzer
Project Manager: TACOM-ARDEC	Mr. Curtis Anderson
Project Engineer: TACOM-ARDEC	Mr. Mark P. Nitzsche

Technical material contained in this report has been approved for public release.

1.0 EXECUTIVE SUMMARY

In prior efforts conducted under the Army's Conventional Ammunition Demilitarization Technology Research and Development Program and sponsored by the Army Defense Ammunition Center, a Multimetal Continuous Emissions Monitor System (MMCEMS) for hazardous air pollutant (HAP) metals was developed by the Naval Air Warfare Center Weapons Division (NAWCWD) at China Lake, California in collaboration with the U.S. Army Tank-automotive and Armaments Command, Armament Research, Development and Engineering Center (TACOM-ARDEC) at Picatinny Arsenal. The MMCEMS is capable of rapid and simultaneous detection of all 14 of the HAP metals targeted by the U.S. Environmental Protection Agency (EPA), plus virtually any metal in the contained periodic table.

Under the current ESTCP project, validation of the MMCEMS has been carried out in two separate demonstrations. The first took place at Tooele Army Depot (TEAD), Utah, from May 3-6, 1999, on the stack emissions from an Ammunition Peculiar Equipment (APE) 1236 M1 munitions deactivation incinerator. The incinerator feed was empty 30-mm aluminum cartridge casings containing percussion primers, introduced into the furnace at an average rate of 2000 per hour. The second took place at the Retech Corporation's manufacturing facility at Ukiah, California, from October 14-20, 1999, on the Plasma Arc Hazardous Waste Treatment System (PAHWTS) under development in a separate ESTCP project. The incinerator was fed with surrogate wastes such as contaminated soil, paint mixtures, oily rags and solvents to investigate the effects of stack-gas moisture on MMCEMS operation.

The MMCEMS employs an argon inductively coupled plasma (ICP) spectrometer as an elemental analyzer, a shrouded probe for extracting a stream of stack gas, and a patented sampling interface for plasma sample introduction. The MMCEMS measures all 14 HAP metals simultaneously following sample stack gas introduction into the argon plasma, which occurred at approximately one-minute intervals.

Sample stack gas is continuously extracted at a constant flow rate using a shrouded probe and large-diameter heated transfer line to minimize sample aerosol deposition losses. The sampling interface is responsible for the automatic introduction of sample stack gas into the ICP. The ICP is sustained by passing a stream of argon through a quartz plasma torch mounted in the center of a helical induction coil. Sample stack gas is injected at a constant flow rate into the argon plasma. Entrained particulate matter is rapidly vaporized and the constituent metal species are ionized and excited. Each metal emitted a fingerprint optical spectrum that is then detected by a multichannel optical spectrometer. The intensity of the optical spectra is directly proportional to the concentration of the corresponding metals in the stack gas sample. Operation of the MMCEMS system is entirely automated and only minimum human interaction is required.

At TEAD, metal emissions resulted from the detonation of munitions in the rotary kiln, and the artificial introduction of metal aerosols into the furnace exhaust gases. The aerosol introduction was performed in order to expand the range of available stack gas metals to ensure that the test was both complete and representative. Emissions of the target metals Ba, Cd, Co, Cr, Mn, Ni, Pb, Sb, Sr, and Y were detected. A relative accuracy test audit (RATA) was conducted to assess the analytical performance of the MMCEMS under the existing furnace production conditions at TEAD. The RATA exercise involved a series of 12 individual test runs, conducted over 4 consecutive days,

during which simultaneous stack monitoring with the MMCEMS and sample collection for Reference Method testing were conducted. During each test run, reference method testing using EPA Method 29 was performed by personnel from the U.S. Army Center for Health Promotion and Preventative Medicine (USACHPPM), Air Pollution Source Management Program.

The results of the RATA exercise indicated that 8 of the 10 target metal analytes satisfied and favorably exceeded the 20 percent relative accuracy requirement stipulated in the EPA's PS-10, Draft Performance Specifications for MMCEMS. Failure to achieve better than 20 percent relative accuracy for all 10 target metal analytes was due to experimental error and not due to any specific deficiency of the MMCEMS.

The approximate cost of conducting the first demonstration was $105,500, including labor, transportation, materials, travel, and fees for regulatory permit modifications.

During the second demonstration on the PAHWTS, the target metals were Al, Fe, Pb, and Ti, as these were the only appreciable metal emissions observed. Under operating conditions of up to 41 per cent moisture in the stack emissions, reasonable agreement (+/- 20%) between the MMCEMS and Reference Method 29 were obtained.

The approximate cost of conducting the second demonstration was $33,200 including labor, transportation, materials, and travel.

The current manufacturers price for the MMCEMS, as quoted to the Army, is approximately $320K. When amortized over 10 years, the estimated total cost for acquisition and operation of the MMCEMS would be approximately $50K per year.

The MMCEMS was developed to provide a means of continuous compliance assurance for the operation of APE 1236 munitions deactivation furnaces and other military-related sources of hazardous air pollutant metal emissions. The enhanced compliance assurance capability afforded by an MMCEMS can potentially eliminate the need for many of the costly and time-consuming tasks that comprise the present compliance assurance strategy. Not only can a MMCEMS of this type provide a comprehensive account of stack gas metal emissions to demonstrate that compliance is being achieved, the near-instantaneous availability of metal emission data can enable closed-loop process control capability. By triggering an automatic waste feed cutoff in the event of impending non-compliant metal emissions, the MMCEMS can help maintain efficient furnace throughput while ensuring that time-averaged metal emissions do not exceed regulatory limits. Consequently, an emissions-based compliance assurance strategy in which an MMCEMS plays a key role will reducing reliance on passive and operationally inefficient strategies such as detailed waste characterization and waste feed rate restrictions.

Anticipated benefits of the implementation of a MMCEMS for HAP metal emissions include possible relaxation of operating restrictions on waste characterization, waste feed rates and requirements for permit modifications for new feed items. The MMCEMS also provides an abundance of previously unavailable compliance data that can be used to contradict alleged violations.

While originally intended for use on explosive ordnance deactivation furnaces and similar facilities, the system has great potential for industrial application. As a result of a technology license agreement between the Navy and TJA Solutions, Inc. (Franklin, MA), the MMCEMS has become commercially available and is being marketed by under the TraceAIR™ trademark.

This page left blank intentionally.

2.0 TECHNOLOGY DESCRIPTION

2.1 BACKGROUND PROBLEM

Among the nearly 200 chemical species presently targeted as hazardous air pollutants (HAPs) by the U.S. Environmental Protection Agency (EPA), are 14 metal elements. These HAP metals are arsenic (As), antimony (Sb), barium (Ba), beryllium (Be), cadmium (Cd), chromium (Cr), cobalt (Co), lead (Pb), manganese (Mn), mercury (Hg), nickel (Ni), selenium (Se), silver (Ag), and thallium (T1). Emission of HAP metals into the atmosphere as a result of the combustion of hazardous wastes and during other industrial processes constitutes a significant contribution to local and global air pollution. Increased awareness of the potential human health risks and adverse environmental impact associated with these emissions has led to regulatory restrictions on the operations of facilities considered to be primary sources of these pollutants. These sources include, but are not limited to, industrial and municipal waste incinerators, cement kilns burning high fuel-value hazardous wastes, and coal-fired boilers and furnaces.

Compliant operation of these sources is most often achieved through the use of effective pollution abatement equipment and adherence to prescribed operating parameters designed to restrict the rates of waste combustion. On a regular basis, compliance assurance testing of air pollutant emissions, including metals, is conducted to determine the effectiveness of these strategies. Continued operation of the facility is contingent upon successful demonstration of regulatory compliance. These tests consist primarily of manual collection of pollutants using appropriate capture media, and subsequent laboratory analysis at a later date. At the present time, only limited means are available for the determination of interim compliance. Consequently, continuous assurance of compliant emissions cannot be implicitly guaranteed, and the facilities in question must rely on the restrictive operating conditions described above, to promote compliant operation.

For several of the gaseous pollutants including carbon monoxide (CO), nitrogen oxides (NO_X), and hydrogen chloride, (HCl), commercially-available instrumentation provides continuous monitoring of stack emissions and instantaneous notification to operators in the event of non-compliance. However, similar instrumentation, capable of continuous detection of airborne metal emissions, has not been commercially available, leaving facility operators no recourse for documenting HAP metal emissions. The value and desirability of such instrumentation is obvious; a continuous metals monitor would be useful as a means for assuring continuous compliance, as an integral component in a process control arrangement, and as a powerful diagnostic tool for system optimization. In proposing new and more restrictive guidelines on the combustion of hazardous wastes, the EPA has indicated a need for airborne metals monitors, and suggested attractive incentives for their implementation including possible relaxation of operating restrictions including waste feed rates.
Of specific concern to the military is the impact of proposed regulatory restrictions on airborne metal emissions on the day-to-day operation of explosive ordnance deactivation furnaces and similar facilities. The continued operation of these facilities is essential to perpetuating numerous military missions. However, because of ever-increasing regulatory scrutiny, it has become difficult to obtain the necessary operating permits. For those facilities presently permitted, restrictions on waste feed rates and requirements for waste feed characterization have made operation both inefficient and costly, all in the interest of ensuring compliant operation. In this respect, the operators of military incinerators face problems similar to those of their private sector counterparts. These problems are compounded by the conspicuous unavailability of a continuous metals monitor and lack of

alternative means of providing continuous compliance assurance with regard to HAP metal emissions.

2.2 TECHNOLOGY DEVELOPMENT

A Multimetal Continuous Emissions Monitor System (MMCEMS) for hazardous air pollutant metals was developed by the Naval Air Warfare Center Weapons Division (NAWCWD) at China Lake, California. The developmental effort was funded by the Army Conventional Ammunition Demilitarization Technology Research and Development Program under sponsorship of the U.S. Army Defense Ammunition Center (ADAC) and executed by the U.S. Army Tank-automotive and Armaments Command, Armament Research, Development and Engineering Center (TACOM-ARDEC). A Cooperative Research and Development Agreement (CRADA) between NAWCWD and TJA Solutions, Inc. facilitated rapid development of the system, which has become commercially available and is being marketed under the TraceAIR™ trademark. This MMCEMS is capable of rapid and simultaneous detection of all 14 HAP metals, plus virtually any metal in the chemical periodic table. The MMCEMS was developed for use in the operation of munitions deactivation furnaces.

The MMCEMS employs an argon inductively coupled plasma (ICP) spectrometer as an elemental analyzer, a shrouded probe for extracting a stream of stack gas, and a patented sampling interface for plasma sample introduction. The MMCEMS measures all 14 HAP metals simultaneously following sample stack gas introduction into the argon plasma, which occurs at approximately one-minute intervals.

The detection limits for the MMCEMS in micrograms/dry standard cubic meter (µg/dscm) are provided in Table 1.

Metal Detection Limit(µg/dscm) Metal Detection Limit(µg/dscm)

Table 1. Detection Limits for the MMCEMS.

Metal	Detection Limit (µg/dscm)	Metal	Detection Limit (µg/dscm)
Ag	0.6	Hg	2
As	6	Mn	0.1
Ba	0.15	Ni	0.8
Be	0.02	Pb	2
Cd	0.2	Sb	7
Co	0.4	Se	6
Cr	0.3	Tl	5

2.3 SAMPLING INTERFACE

The MMCEMS depends on an extractive process to obtain a representative stack gas sample stream. The sampling system must efficiently aspirate sample aerosols from a moving gas stream in the stack while preserving the integrity of the extracted sample during pneumatic transport to the ICP elemental analyzer. These requirements constitute a considerable technical challenge, given the vulnerability of sample aerosols to the adverse effects of turbulent deposition and gravitational settling in sampling probes and flow conduits. Therefore, careful optimization of sampling methodology, based on an understanding of these phenomena, is essential in this instance to achieving an acceptable level of analytical performance.

The present MMCEM sampling system employs a shrouded probe (Ref. 1) design that is noted for its inherent freedom from excessive sample aerosol deposition losses. The shrouded probe was developed to remedy the inadequacies of existing probes, in relation to specific sampling applications that demanded highly efficient aspiration and transport of airborne particulates under constant flow rate conditions. The requirements of the MMCEMS application are very similar to those for which the shrouded probe was originally intended. In fact, the shrouded probe has been adopted as a strategic replacement for a Method 5-type (Ref. 2) sampling probe that proved to be inadequate for sustaining reliable MMCEMS operation.

The MMCEMS combines an extractive sampling technique with rapid measurement of HAP metal concentrations directly in the sample stack gas stream using atomic emission spectrometry. Important sampling system modifications, to which the present level of analytical performance can be attributed, are described below. Operation of the MMCEMS involves continuous extraction of a sample stream of stack gas and pneumatic transport of the extracted stack gas to an elemental analyzer that provides simultaneous measurement of all entrained metal species, including the 14 HAP metals. To enable its use as a versatile elemental analyzer for stack gas metals, an ICP spectrometer was purposely modified to accommodate plasma introduction of discrete aliquots of sample stack gas. A sampling interface, consisting of a series of air-actuated valves and a coiled length of tubing, referred to as the sample loop, is responsible for automatic introduction of sample stack gas into the ICP synchronized gas stream handling and plasma sample introduction. Calibration of the MMCEMS is accomplished using precision-generated, standard aerosols of known metal composition and concentration. The entire system operates under computer automation and requires minimum human interaction. Calibration drift checks are performed at regular intervals by automatic introduction of a standard metal aerosol stream.

The ICP is sustained by passing a stream of argon through a quartz plasma torch mounted in the center of a helical induction coil. Power from a Radio Frequency (RF) generator energizes the induction coil which, in turn, couples that power to the plasma. Sample stack gas is injected at a constant flow rate into the argon plasma. Entrained particulate matter is rapidly vaporized and the constituent metal species are ionized and excited. Each metal emits a fingerprint optical spectrum that is then detected by the multichannel optical spectrometer. The intensity of the optical spectra is directly proportional to the concentration of the corresponding metals in the stack gas sample.

Figure 1 illustrates the construction of the shrouded probe and shows the position of the probe inlet in relation to the shroud. Working in concert with the conical probe, the shroud acts as an aerodynamic decelerator to reduce the velocity of the incident gas by a factor of 2-3. Consequently, a larger probe inlet can be used, compared to that required for a conventional isokinetic probe operating in the same free stream at an identical sampling flow rate. The shrouded probe has a secondary advantage in that the 18.2-mm probe inlet intercepts gases from a relatively quiescent (low turbulence) region of flow along the longitudinal axis of the shroud. Anisokinetic effects and turbulent deposition at the probe opening are both minimized, contributing to efficient aspiration of aerosols from the free stream, and enhanced aerosol transmission. The shrouded probe used in the present system was modified to include a thermostatted heating jacket in order to maintain the temperature of the probe above the stack gas dew point.

Figure 2 is a schematic diagram of the MMCEMS sampling system. The shrouded probe is connected to the ICP elemental analyzer by means of a 6.1-m long, 29-mm I.D. heated teflon transfer line. Longer lengths are available to accommodate various installations, but it has proven advantageous to minimize the length of this component. In order to avoid deposition losses associated with gravitational settling of entrained particulates, it is beneficial to install the heated transfer line, where possible, in a steeply inclined orientation. However, this necessitates locating the MMCEMS instrument enclosure immediately adjacent to the stack.

The MMCEMS sampling interface can optimally accommodate the 10-20 L/min flow rates that were previously used in conjunction with a Method 5-type isokinetic sampling probe. The shrouded probe (Anderson Instruments, Model RF-2-111) is designed to operate at a fixed flow rate of 57 L/min. In order to reconcile the different flow rate requirements of the sampling interface and the shrouded probe, a stack gas sub-sample is extracted at 11 L/min from the main flow in the manner depicted in Figure 3. A 12.6-mm I.D. isokinetic sampling probe is mounted axially within the sub-sample extractor assembly such that the sampling orifice is positioned several centimeters inside the smooth teflon bore of the transfer line.

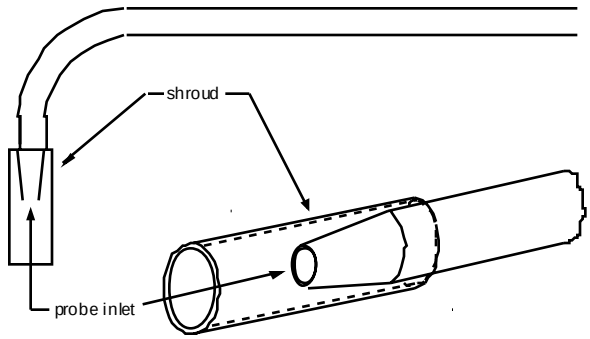

Figure 1. Construction of the Shrouded Probe.

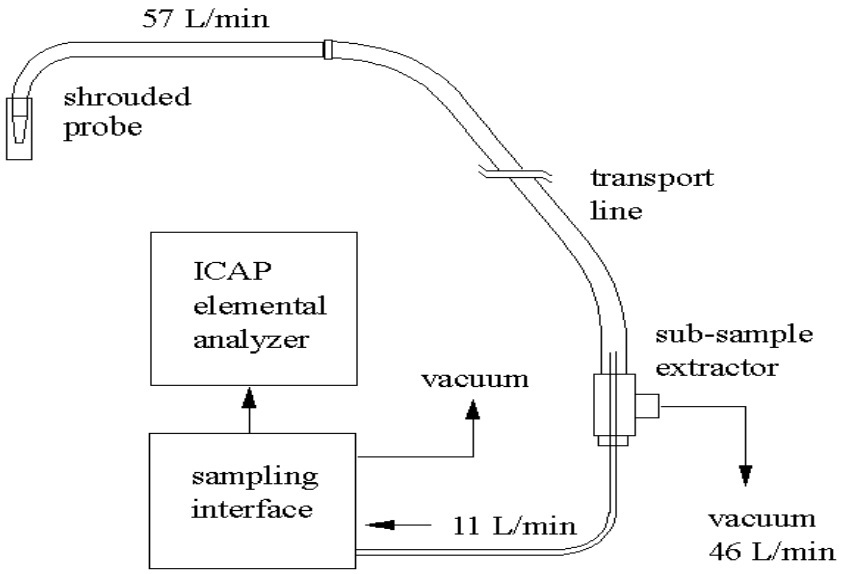

Figure 2. Schematic Diagram of the MMCEMS Sampling System.

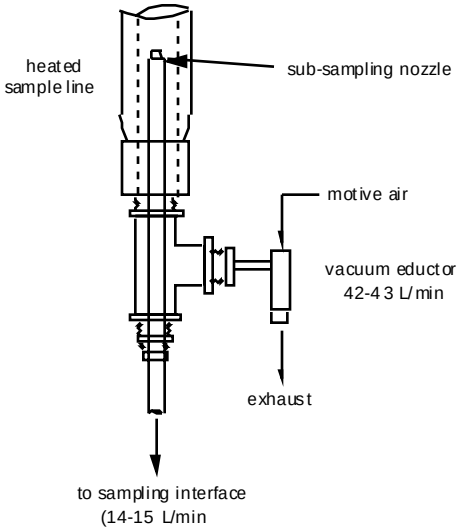

Figure 3. Sub-Sample Extraction.

A vacuum eductor, located downstream from the sampling interface outlet port, provides the necessary suction to extract the 11 L/min sub-sample flow. Control of eductor suction is achieved through precise adjustment of a compressed air motive stream. A second vacuum eductor, controlled independently, but in a similar manner, provides suction for the balance of the 57 L/min shrouded probe flow rate.

While a stream of extracted stack gas flows continuously through the sampling interface, fresh sample aliquots of stack gas, derived from this flowing stream, are introduced at regular intervals into the argon plasma. Plasma sample introduction is achieved at a constant volumetric flow rate by pneumatic displacement of the resident stack gas contents of the sample loop. Operating automatically under computer control, the sampling interface executes a sample introduction cycle once every 60 seconds. Upon introduction into the argon plasma, stack gas metals are rapidly vaporized, ionized, and excited, resulting in the emission of an atomic spectrum for each of the metal analytes present in the sample. A diffraction grating, located in the multichannel optical spectrometer, is used to angularly disperse the emitted light according to wavelength. A series of dedicated photodetectors, mounted in precise locations in the spectrometer, is used to intercept the desired emission wavelengths for each of the metal analytes.

2.4 BACKGROUND INTERFERENCE CORRECTION

In addition to atomic emissions originating from stack gas metals excited in the plasma, the spectrometer must contend with background emissions from the plasma itself, as well as spectral contributions from various stack gas molecular species. In order to accurately measure the net intensities of emissions exclusively associated with stack gas metals, it is necessary to discriminate against all other emissions. This is accomplished using a process called background correction which automatically subtracts contributions from plasma background emission. A separate method is used to correct for spectral interferences that arise as a result of direct overlap between emissions from stack gas molecular species and atomic emissions from stack gas metals. The net atomic emission intensities are directly proportional to the concentrations of the various metal analytes in the sample. As a result of previously calibrating the response of the instrument, actual metal analyte concentrations are thus obtained. Stack gas temperature, pressure, and moisture content are taken into account during calculation of the stack gas metal concentrations.

2.5 SYSTEM OPERATION

One person is required to operate the system. The duties of the operator are essentially start-up, system shutdown, archiving of collected emissions data, and preventative maintenance. No special skills are required in order to operate the system, and therefore an individual of reasonable technical ability and computer literacy would be a qualified operator. The technician is not required to be present at all times during system operation. No OSHA health and safety training is required above that which is required for operation of a hazardous waste incinerator.

2.6 COMPETING TECHNOLOGIES

A number of competing technologies have also been developed to provide continuous compliance assurance for various types of waste combustors. However, the present MMCEMS represents the most successful effort to date to fulfill many of the demanding requirements of the intended application. Because the argon ICP is a nearly ideal source of atomic excitation, the MMCEMS can provide detection sensitivity that exceeds that of all competing technologies.

An exception to this is a technique that employs continuous sampling of stack gas metals followed by later analysis of the collected sample by X-ray fluorescence spectrometry. By virtue of the sample pre-concentration employed by this technique, its sensitivity depends on the duration of the sample collection step, and is obtained at the expense of system response time.

2.7 ADVANTAGES AND DISADVANTAGES

In order to provide continuous compliance assurance, an instrument must be capable of both sensitive and rapid analyses. The argon ICP-based MMCEMS is able to detect metals in stack gases at low part-per-billion concentrations while making measurements at one-minute intervals. In this respect, the argon ICP-based MMCEMS system has a distinct advantage. Its sensitivity, coupled with its rapid response time, meaningful calibration scheme, and high level of automation, make it entirely suitable for fulfilling the MMCEMS requirements expressed in the most recent revision of the Maximum Achievable Control Technology (MACT) rule. Most importantly, the present MMCEMS enables the implementation of an automatic waste feed cutoff strategy, which provides the highest level of compliance assurance available. Systems that employ continuous sampling with later analysis do not have this capability and therefore cannot provide the same level of compliance assurance. No other competing technology has the ability to measure all hazardous air pollutant metals simultaneously, and many simply lack the capability of measuring all 14 of the HAP metals. These limitations severely compromise the level of compliance assurance that these technologies can provide. Also, many of the competing technologies require one or more human operators. The present MMCEMS, on the other hand, is essentially a turnkey system, and requires minimal human attention to operate.

A common criticism of the present MMCEMS concerns the reliability of an extractive vs. in-situ analytical method. While this criticism may be generally valid, the developers have successfully studied and optimized the sample extraction process, and have taken steps, including the implementation of a revolutionary shrouded sampling probe, to assure the collection of a representative stack gas sample and transport of that sample to the elemental analyzer. Efforts to further enhance this process are ongoing.

In regard to the potential limitations of the argon ICP-based MMCEMS, critics have described the system as complex and expensive while failing to consider this system in the context of its noteworthy capabilities and the potential benefits associated with those capabilities. With the exception of the X-ray fluorescence technique described above, which is in reality a continuous sampler and not a continuous monitor, all emerging MMCEMS technologies share a comparable degree of complexity. What distinguishes the present MMCEMS is that its complex features are fully automated and operate in an integrated manner. System cost is a relative issue and must be considered in the context of potential benefits and resultant cost savings. As described above, a

sophisticated system such as that embodied by the present MMCEMS, by virtue of its capabilities, is likely to provide a greater return in terms of regulatory benefits associated with enhanced compliance assurance. The acquisition and operating costs of such a system are likely to be more rapidly amortized as a result.

One specific limitation of the present MMCEMS is the lack of a reliable calibration scheme for detection of mercury emissions. The argon ICP spectrometer is capable of sensitive detection of mercury, but the highly successful calibration scheme used for the other metals has proven to be unreliable for mercury calibration. A promising alternate calibration method has been identified, but its implementation was beyond the scope and resources of this ESTCP-funded effort.

Stack-gas moisture might also detrimentally affect MMCEMS operation. The MMCEMS has in the past, encountered stack gases with high moisture loading; during an installation at the VonRoll America waste incinerator in East Liverpool, Ohio, and during a DOE-sponsored technology demonstration at the mixed-waste Toxic Substances Control Act (TSCA) incinerator at Oak Ridge, Tennessee. The moisture levels at these facilities were 35-40 percent and 50-60 percent, respectively. The performance of the MMCEMS was affected by the elevated stack gas moisture in two ways that proved troublesome. The most problematic effect of high stack gas moisture levels involved condensation of the moisture in sampling system components including the vacuum pump and a mass flow controller used to regulate the flow of extracted stack gases. These devices were mounted downstream from the elemental analyzer, and while provision was made to remove most of the moisture from the gas stream at a point slightly upstream from these devices (and downstream from the elemental analyzer), sufficient residual moisture remained in the stream to cause the mass flow controller to malfunction. This malfunction required immediate attention and resulted in periodic interruptions in stack monitoring.

3.0 DEMONSTRATION DESIGN

3.1 GENERAL INFORMATION

Two demonstrations of the MMCEMS were conducted under ESTCP sponsorship.

The first took place at Tooele Army Depot (TEAD), Utah from May 3-6, 1999, on the stack emissions from an Ammunition Peculiar Equipment (APE) 1236 M1 munitions deactivation incinerator (Refs. 3, 4). The primary effort was conducted on an APE 1236 M1 incinerator used to demilitarize and/or dispose of ammunition items and bulk explosive wastes. The TraceAIR™ MMCEMS system was the subject of a performance evaluation and verification test exercise, conducted at Tooele Army Depot (TEAD), Utah, during the week of May 3-6, 1999. The incinerator feed was empty 30-mm aluminum cartridge casings containing percussion primers, introduced into the furnace at an average rate of 2000 per hour.

Having proven the analytical accuracy, suitability, and robustness of the TraceAIR™ MMCEMS for compliance monitoring in conjunction with the source category represented by the munitions deactivation furnace, the next logical step in the dem/val process involved expanding the applicability of the system to other source categories. Of immediate interest to the DoD are plasma arc waste treatment facilities, medical waste incinerators, and chemical weapons destruction facilities. Each of these source categories represents a technical challenge to the MMCEMS, but in no instance is the challenge insurmountable. The primary difference between some of these sources, and the munitions deactivation furnace for which the MMCEMS was validated, is that the latter emits primarily dry stack gases as a result of the absence of wet scrubbers in the pollution control system. (It is for this specific reason that APE 1236 furnaces may not be able to readily comply with future MACT regulatory restrictions on metal emissions and therefore will benefit from continuous metals emissions monitoring.) Most modern incinerators and plasma arc systems employ wet scrubbers to facilitate the removal of particulate matter and acid gases from exhaust streams and consequently, emit stack gases that are at or near saturation.

The second demonstration took place at the Retech Corporation's manufacturing facility at Ukiah, California from October 14-20, 1999, on the Plasma Arc Hazardous Waste Treatment System (PAHWTS) under development in a separate ESTCP project. This exercise was conducted during the Factory Integration Testing (FIT) of the PAHWTS at the Retech Corporation's manufacturing facility at Ukiah, California (Ref. 5). The incinerator was fed with surrogate wastes such as contaminated soil, paint mixtures, oily rags, and a vegetable oil/methanol mixture to investigate the effects of stack-gas moisture on MMCEMS operation. The objective of this demonstration was to assess the influence of any source-specific conditions or stack gas characteristics, in particular the high moisture loading anticipated in the stack gases of the PAHWTS, on the MMCEMS' ability to accurately measure stack gas metal concentrations.

3.2 TOOELE ARMY DEPOT DEMONSTRATION

3.2.1 Performance Objectives

The objectives of this effort were to:

- Prove that the MMCEMS meets the performance requirements outlined in the EPA's PS-10, Draft Performance Specifications for Multimetals Continuous Emissions Monitors (Ref. 6).

- Demonstrate, using this specific explosive waste combustor operated under typical conditions, that the MMCEMS is suitable for use on other identical APE 1236 M1 units.

- Assess the adequacy of this technique for providing continuous compliance assurance for metal emissions.

- Achieve a relative accuracy of no greater than 20 percent of the mean value of the reference method test data. The requirement is specified in PS-10.

3.2.2 Tooele Facility Background/Description

The APE 1236 furnace contains an oil-fired rotary kiln, an afterburner, and a baghouse filter as its principal components, and is the Army's workhorse facility for deactivation of conventional small-arms ammunition. Emissions resulting from operation of the APE 1236 M1 (Figure 4) include in addition to metals, chlorine, HCB, DNT, NG, dioxins and furans. Continuous monitors on the APE 1236 M1 currently measure CO and O_2.

Currently, application of the MMCEMS to the APE 1236 M1 Hazardous Waste Incinerator has the greatest potential for immediate and widespread application. Potential demonstration sites were, therefore, limited to currently operating APE 1236 sites. The other considerations used as selection criteria were:

- Level of furnace workload.

- Availability of a munition suitable for testing (an item which would provide suitable metal emissions/emission levels).

- Availability of a sufficient quantity of munitions to perform a sustained demonstration.

- Adequate area/facilities to accommodate MMCEMS system trailer as well as EPA Method 29 reference method testing (Ref. 7).

- Level of interest of/cooperation from site personnel.

- Level of interest of/cooperation from sate environmental permitting authorities.

- Cost of site support.

Figure 4. Production APE 1236 M1 Hazardous Waste Incinerator.

Potential test sites included, in addition to Tooele Army Depot (TEAD), Tooele, Utah; McAlester Army Ammunition Plant, Oklahoma; and the Lake City Army Ammunition Plant, Missouri. Of the 8 or 9 installations containing APE 1236 furnaces, these three facilities are fully permitted, work-loaded, and operational on a regular basis. The Tooele Army Depot was specifically selected for the demonstration/validation exercise because the prototype MMCEMS was operated in 1996 on one of two APE 1236 furnaces (R&D and production) located there, as part of an Army-sponsored R&D effort. During that time, both the Tooele staff and representatives of the State of Utah Department of Environmental Quality became familiar with the technology and were highly cooperative in facilitating its operation at that site.

TEAD (Figure 5) has a total of 1,094 buildings (including ammo magazines) spread over 24,732 acres of mountainous desert. TEAD is a depot as opposed to an ammunition plant, and therefore, no ammunition is manufactured there. Specific stockpile information is not available, but TEAD has a storage capacity of 1,951,000 square feet. Conventional small arms ammunition is demilitarized at a rate of approximately 45,000 pounds per week, depending on the specific item.

Figure 5. Tooele Army Depot.

3.2.3 Physical Setup and Operation at Tooele Army Depot

A detailed test plan, outlining a rigorous test exercise was submitted to both the EPA and the State of Utah Department of Environmental Quality for approval. A modification to the operating permit for the incinerator was required in order to conduct the demonstration. Obtaining the permit modification took approximately 45 days.

The demonstration on the TEAD APE 1236 M1 Munitions Deactivation Incinerator was conducted under full production (demilitarization) conditions. The demonstration was conducted during normal incinerator operating hours over a 4-day period. The test facility was hosted by the Ammunition Operations Directorate. Site-preparation activities included positioning, leveling and securing (using wheel chocks) and unloading of the equipment trailer, connection of the trailer to a power source, and connection of the system to the furnace stack and furnace control system. The MMCEMS trailer requires an electrical hookup to a source capable of providing 208 V, 1 O, 60A or greater. The trailer is equipped with a 4-conductor electrical cable, 40' in length with bare wire (pigtail) termination on one end and a 4-pin female receptacle on the trailer end. The receptacle plugs into a mating connection on the right-front corner of the trailer. The hook-up requires 2 hot connections, one neutral, and one ground. A heated sample line and umbilical line is secured to the stack testing platform as necessary to the point where it joins the sampling probe which is mounted in a sampling port. The sampling port consists of an existing female-threaded (3" NPT) fitting welded to the stack.

Two separate electrical connections are established between the MMCEMS trailer and the control room. One 2-wire connection is used to transmit data from the stack oxygen analyzer to the MMCEMS to permit normalization of data to 7 percent oxygen. A second circuit is used for the

waste feed control. This is a 2-wire connection terminating at a relay on the MMCEMS that is used to open or close the circuit as required to start or stop waste feed depending upon stack emissions.

An APE 1236 M1 Hazardous Waste Incinerator served as an appropriate test bed since this category of waste combustor represents the intended application for which the MMCEMS is presently being evaluated. The furnace was operated under typical production conditions including the continuous processing of munitions feed items. Stack gas metal emissions (Ba, Cd, Co, Cr, Mn, Ni, Pb, Sb, Sr, and Y) resulted from the combined contributions of munitions detonation inside the rotary kiln, and artificial introduction of metal aerosols into the furnace exhaust gas stream. A series of 12 test runs were conducted during which Method 29 trains collected stack gas samples for reference comparison with the MMCEMS-measured stack gas metal concentrations.

The munitions items originally selected for the test exercise were MK27 point detonating fuzes. Waste feed characterization data for the MK27 fuze, obtained from the Army's Munitions Items Disposition Action System (MIDAS) database, indicated that the fuzes were known to contain lead azide and antimony sulfide as part of the energetic formulation, and an unspecified amount of cadmium as an electroplated component.

The munitions items were introduced into the furnace at the operating permit-prescribed feed rate of 660 per hour. Detonation of the fuzes in the rotary kiln resulted in stack-gas emissions of cadmium, as well as lead and antimony. MMCEMS-detected cadmium emissions, resulting from the detonation of the MK27 fuzes was found to exceed the 0.26 g/hr emission rate limit specified in the furnace operating permit. Cadmium emissions resulting from introduction of metal aerosols, while making only a fractional contribution, further exacerbated the problem. The aqueous solution used to generate the metal aerosols (see below) had been deliberately fortified at a level sufficient to generate detectable levels of cadmium in the stack gases, but with careful consideration to not exceed the 0.26 g/hr emission limit.

The excessive cadmium emission rate was reported to the furnace operators who in turn alerted the State of Utah Department of Environmental Quality, Division of Solid and Hazardous Waste. Because continued violation of the cadmium emission limit was deemed not acceptable, identification of an alternate munitions item was required before the test exercise could resume. The alternate munitions items, available in sufficient abundance to continue the test exercise were empty 30-mm aluminum cartridge casings containing percussion primers. These items were introduced into the furnace at an average rate of 2000 per hour. Detonation of the percussion primers resulted in emissions of lead, barium, and antimony. No cadmium emissions were expected from detonation of the percussion primers, and no cadmium emissions were observed. Cadmium emissions during the remainder of the test exercise resulted from introduction of metal aerosols only, and subsequent cadmium emission rates did not exceed the 0.26 g/hr regulatory limit.

As part of this demonstration, a proof-of-principle demonstration of closed-loop process control, involving automatic waste feed cutoff enabled by the MMCEMS was conducted. The objective of this exercise was to show that munitions items can be introduced into the furnace at a favorable effective feed rate, while the corresponding average emissions of offending metals are successfully regulated at levels that do not exceed permitted limits. More information on this demonstration can be found in the ESTCP Demonstration Plan[3], "A Continuous Emissions Monitor for Hazardous Air Pollutant Metals", as well the test plan[4] "Plan for Verification Testing of a Prototype Multimetals

Continuous Emissions Monitor", which was prepared by NAWCWD and reviewed by the EPA Emission Measurement Center.

3.2.4 Monitoring Procedures

Sampling was conducted in accordance with EPA Test Method 29 by the U.S. Army Center for Health Promotion and Preventive Medicine (USACHPPM), Air Pollution Source Management Program. Mr. Michael Pattison, the chief engineer of the USACHPPM team, was responsible for conducting and directing the execution of the Method 29 sampling efforts.

3.2.5 Analytical Procedures

Samples recovered from Method 29 sampling trains were analyzed at an off-site laboratory, Gascoyne Laboratories, Inc., Baltimore, Maryland, 21224. Data analysis was performed in accordance with EPA Performance Specification 10. ICP atomic emission spectrometry (ICPAES), Method 6010 (Ref. 8) and/or ICP mass spectrometry (ICP-MS), Method 6020 (Ref. 9) was used for the analysis of metals in all Method 29 samples.

3.3 RETECH CORPORATION MANUFACTURING FACILITY DEMONSTRATION

3.3.1 Performance Objectives

Testing of the MMCEMS in conjunction with the Plasma Arc Hazardous Waste Treatment System (PAHWTS) was an adjunct to the primary exercise of evaluating the performance of the PAHWTS itself under an ESTCP-sponsored project directed by Mr. Bruce Sartwell of the Naval Research Laboratory. From a quantitative perspective, a principal objective of this adjunct exercise was to achieve reasonable agreement (±20 percent) between the MMCEMS results and those obtained using EPA Test Method 29.

Another principal objective of the MMCEMS involvement in the PAHWTS factory integration testing (FIT) at Retech was to assess the compatibility of the MMCEMS, as presently configured, with the high moisture loading anticipated in the stack gases of the PAHWTS. A successful demonstration of this compatibility would reinforce the notion that the MMCEMS can be of potential long-term benefit to operation of the PAHWTS in terms of ease of permitting, relaxation of requirements for waste feed characterization for metals, and avoidance of emission violations.

3.3.2 Retech Corporation Manufacturing Facility Background/Description

The PAHWTS, as shown in Figure 6, was assembled inside the Retech facility and occupied approximately 1700 ft^2 of floor space. The layout of the PAHWTS is illustrated below. The exhaust stack was located near an outside wall. The instrument trailer containing the metal emission monitor prototype was parked immediately adjacent to this wall to allow easy access to the stack for mounting of the shrouded probe and connection of a heated sample line.

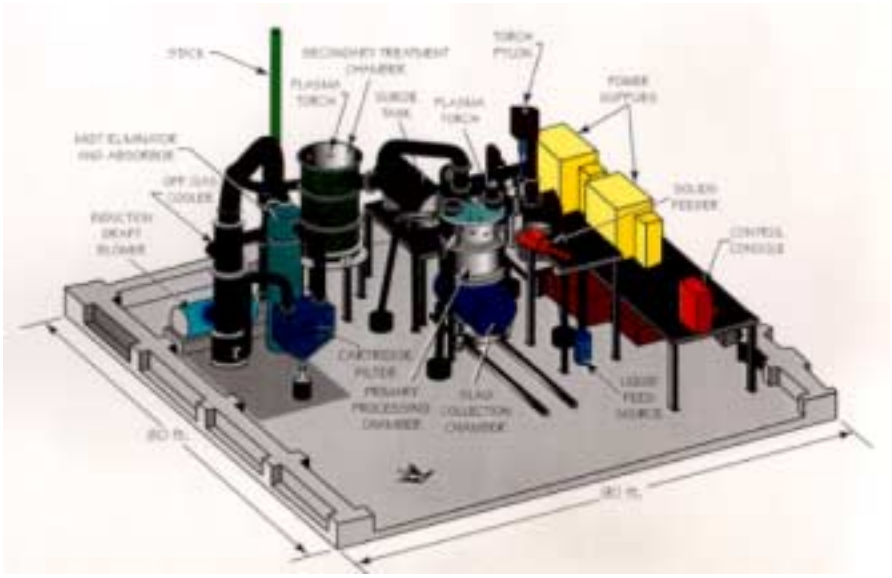

Figure 6. Illustration of PAHWTS Layout.

The PAHWTS consists of a primary plasma arc torch, a crucible to contain a slag mixture, a secondary torch chamber to serve as an afterburner, a series of liquid quench chambers, and a final baghouse filter. The primary plasma torch is used to provide a source of heat to create a slag mixture in the crucible. Various forms of waste, either liquids or solids, are introduced into the crucible where they are rapidly and efficiently decomposed due to the high temperatures encountered upon contact with the molten slag. Theoretically, waste materials are completely mineralized and solid constituents are trapped in the slag and later vitrified as the slag is poured into a mold. Off-gases are subjected to further decomposition by the discharge of the secondary plasma torch, and in theory, all remaining gaseous organic contaminants are destroyed at this point.

The PAHWTS was constructed by Retech, under contract with the Navy, for future installation at Norfolk Navy Base. The PAHWTS will be used to destroy various waste streams from Navy ships, including paints, solvents, and oily rags.

3.3.3 Retech Corporation Manufacturing Facility - Physical Setup and Operation

The test of the MMCEMS on the Plasma Arc Hazardous Waste Treatment System under development by the Naval Research Laboratory and Retech Corporation was conducted from October 14-20, 1999 according to a test plan[5] reviewed by the EPA Emission Measurement Center. The test was designed to assess the effects of high moisture levels in the stack gases caused by the types of feed materials for which it will be applied.

A number of significant improvements were made to the prototype MMCEMS originally tested on the relatively dry stack at Tooele Army Depot to alleviate potential problems associated with the high levels of stack gas moisture anticipated with the PAHWTS. Components used to remove moisture from the gas stream were upgraded in an attempt to achieve more efficient removal. It is important to note that moisture removal from the sample gas stream is achieved down stream from

the sampling interface simply to protect flow metering and suction components. Thermoelectrically cooled condensers were added to remove most of the moisture from the gas stream. This approach proved to be only partially successful. In the interim period between the execution of this test and the writing of this report, a technical solution was implemented that not only eliminated moisture-related problems, but also simplified operation and increased system reliability. This solution involved replacing the vacuum pump used to extract the sample stack gas stream with a pair of vacuum eductors. The vacuum eductor has no moving parts and is completely immune to the effects of condensing water vapor. Furthermore, since the flow rate through the eductor can be easily regulated by controlling the flow of compressed air used as the eductor motive gas, the mass flow controller is no longer needed. A separate mass flow controller is retained however, strictly for MMCEMS calibration purposes. It is used to regulate the flow of diluent air and in that application, does not come in contact with moisture. In summary, lessons learned during the PAHWTS led to the implementation of the vacuum eductor which facilitated the elimination of both the vacuum pump and mass flow controller that were both vulnerable to moisture-related malfunction.

The process improvements described above were not only intended to enhance the overall performance of the MMCEMS when moist stack gases were encountered, but are of significant advantage for general operation as well. More recently, the solenoid valves previously used in the sampling interface were upgraded to air-actuated plug valves. The new valves achieved superior sealing and prevented loss of sample gas pressure. Since the operation of these valves was dramatically more reproducible than the previously-used solenoid valves, the measurement precision improved to the extent that the detection limits for several metals were lowered considerably.

Execution of the FIT test according to a separate test plan (Mr. Bruce Sartwell) involved the treatment of four surrogate waste streams. The waste streams included Mendocino County Soil, paint mixtures in steel containers, oily rags, and a mixture of vegetable oil and methanol. The first two of these waste streams were the most likely to generate stack gas metal emissions consisting of modest concentrations of titanium (from paint); iron (from containers); and chromium, and possibly lead and barium (from soil). For each of the four waste streams, two 3-hour treatment sessions were conducted. Personnel from U.S. Army Center for Health Promotion and Preventative Medicine, Air Pollution Source Management Program conducted conventional stack testing. Sampling for metals, organics, HCl, and particulates was performed, and a suite of gas analyzers was operated.

While the MMCEMS, as presently configured, is capable of analyzing Ag, Al, As, Ba, Be, Cd, Co, Cr, Fe, Hg, Mn, Ni, Pb, Sb, Sr, Se, Ti, and Tl, detected stack gas metal emissions were limited to those elements (Al, Fe, Pb, and Ti) present in the four waste streams. The MMCEMS automatically executed sample introduction and plasma emission measurements once every 66 seconds. During each sample introduction cycle, concentrations of all of the metals listed above were measured simultaneously.

3.3.4 Monitoring Procedures

Reference sampling was conducted in accordance with EPA Method 29. Reference sampling was performed by the U.S. Army Center for Health Promotion and Preventive Medicine (USACHPPM), Air Pollution Source Management Program.

3.3.5 Analytical Procedures

Sampling analysis was conducted in accordance with EPA Method 29. Samples were analyzed at an off-site laboratory, Gascoyne Laboratories, Inc., Baltimore, Maryland, 21224.

Data analysis was performed in accordance with EPA PS-10, "Draft Performance Specifications for Multimetals Continuous Emissions Monitors," which can be found in Appendix C of the "Plan for Verification Testing of a Prototype Multimetal Continuous Emissions Monitor". ICP atomic emission spectrometry (ICPAES), Method 6010B and/or ICP mass spectrometry (ICP-MS), Method 6020, was used for the analysis of metals in all Reference Method 29 samples.

This page left blank intentionally.

4.0 PERFORMANCE ASSESSMENT

4.1 APE MUNITIONS DEACTIVATION INCINERATOR AT TOOELE ARMY DEPOT

An iterative testing and refinement program, aimed at validating the performance of the TraceAIR™ MMCEMS, was conducted under the watchful eye of the U.S. EPA Office of Air Quality Planning and Standards, Emission Measurement Center (OAQPS-EMS).

Relative accuracy test audit (RATA) calculations were performed on the results of the TEAD demonstration, using the results of 9 selected test runs. Relative accuracy of 20 percent or better was demonstrated for nine of the ten target metal analytes. The relative accuracy demonstrated for antimony (Sb) was less satisfactory as a result of experimental and operator errors and not to any specific sampling or detection deficiency. The RATA results unequivocally verify that the TraceAIR™ MMCEMS has demonstrated its ability to measure concentrations of a representative group of metal analytes in the stack gases of the APE 1236 M1 munitions deactivation furnace, with a satisfactory degree of relative accuracy. Furthermore, the target metal analytes were accurately detected over a challenging range of concentrations.

Details of the results of the exercise can be found in the "Performance Evaluation of the TraceAIR™ Multimetals Continuous Emissions Monitor," which was prepared by NAWCWD (Ref. 10) and in the ESTCP Final Report for Project # 199807 (Ref. 11). An additional summary is provided in an open literature publication (Ref. 12). The analytical results are summarized below in Table 2.

Table 2. Results of Relative Accuracy Test Audit.

Analyte Metal	n	Method 29 Average (µg/dscm)	MMCEMS Average (µg/dscm)	Standard Deviation	Confidence Coefficient	Rel. Accuracy (Percent)	Bias (µg/dscm)	BAF
Ba	6	16.7	16.6	1.57	1.57	9.7	-1.52	-
Cd	3	112	110	11.4	21.0	20.4	-22.4	-
Cr	9	4.8	4.5	0.51	0.39	13.7	-0.12	-
Co	9	58.4	51.7	6.95	5.24	20.4	1.42	1.13
Mn	9	94.5	86.8	7.73	5.83	14.3	1.83	1.09
Ni	8	178.9	166.6	16.2	13.2	14.2	-0.94	-
Pb	9	180.7	181.1	20.8	15.6	8.9	-16.1	-
Sb	9	43.9	54.2	8.22	6.19	37.6	-16.7	-
Sr	9	74.5	68.3	4.80	3.62	13.2	2.61	1.09
Y	9	56.1	59.2	3.55	2.68	10.3	-5.79	-

Listed for each target metal in Table 2 is n, the number of replicate results used in the relative accuracy calculation, the average concentration as determined by Method 29 for n test runs, and the corresponding average concentration as determined by the MMCEMS. Calculated from these data are the pair-wise standard deviation of the n test runs, the calculated confidence coefficient, the

percent relative accuracy, the measurement bias, and where applicable, a bias adjustment factor (BAF). The percent relative accuracy is the principal figure of merit for determining whether the candidate technique is capable of assuring compliance with an applicable standard. This number is based on the difference between the MMCEMS and the reference method results, and takes into consideration the precision, or spread in the data. It is worth noting that for certain metals, an abbreviated data set was used to calculate relative accuracy. This was necessitated due to the absence of these metals during certain test runs after a change in waste feed was required as described in section 3.2.3.

The EPA OAQPS Emission Measurement Center (EMC) witnessed the performance evaluation and later conducted a thorough review of the results of the verification testing. The OAQPS EMC subsequently issued a determination that, with limited exception, the MMCEMS "has met and exceeded the performance criteria" outlined in the EPA's Performance Standard 10, which outlines performance requirements for MMCEMS. The system became the first, and at this time only MMCEMS to met the EPA performance requirements.

As an adjunct to the analytical portion of the demonstration, a test was conducted in which a process control arrangement was configured involving automatic waste feed cutoff enabled by the TraceAIR™ MMCEMS. In instances in which the 15-minute rolling average of certain metal emissions exceeded pre-determined threshold limits, a feedback circuit established between the MMCEMS and the furnace control room was used to terminate introduction of waste munitions. Waste munitions feed was resumed only at such time as the offending metal emissions no longer exceeded the threshold concentration. In this manner, munitions feed rates were maximized while violation of metal emission limits was avoided.

This automatic waste feed cutoff exercise demonstrated that when appropriate waste feed cutoff parameters are identified and implemented, munitions items can be introduced into the furnace at an increased rate while the average emission rates of offending metals are effectively regulated at levels that do not exceed permitted limits.

4.2 PAHWTS FIT TEST AT RETECH CORPORATION MANUFACTURING FACILITY

Performance testing of the prototype MMCEMS in conjunction with the PAHWTS represented an attempt to demonstrate the applicability of the MMCEMS to stationary sources other than the APE 1236 furnace. Specifically, the PAHWTS features a wet scrubber system for exhaust gases and therefore constituted a distinct challenge for the MMCEMS, which had previously been validated in conjunction with a relatively dry stack working environment. In October, 1999, a factory installation test was conducted at the Retech facility to obtain preliminary performance data for the PAHWTS. Part of this exercise involved an assessment of the efficacy of the pollution abatement system to control the emission of metals from the PAHWTS into the atmosphere. Stack testing, using EPA Method 29 sampling trains, was the basis of this assessment. Waste streams were selected in accordance with the temporary operating permit obtained for this facility. It was anticipated that this exercise would provide an ideal opportunity to examine the performance of the MMCEMS. On October 14, Mendocino County soil was introduced into the plasma arc system. Testing on October 14th consisted of two separate Method 29 tests; one lasting two hours and one lasting three hours. Simultaneous monitoring using the TraceAIR MMCEMS produced comparative

metal emissions data. Most notable was the absence of appreciable metal emissions during introduction of the soil. Only aluminum, lead, titanium, and iron were detected by the TraceAIR system during the introduction of soil into the plasma arc. On October 15th, gray epoxy paint was introduced into the plasma arc system. A two-hour Method 29 run was conducted during this period. Stack gas moisture levels were notably high during the introduction of the epoxy paint necessitating an adjustment in the ICP sample introduction flow rate and subsequent re-calibration of the MMCEMS. Following this adjustment, stable operation of the argon ICP was achieved throughout the duration of the test session. During introduction of the epoxy paint, the only stack gas metal emissions detected were those of aluminum, lead, titanium, and iron.

Table 3 lists the MMCEMS results for aluminum, lead, titanium, and iron for the three test sessions described above, the corresponding Method 29 data, and the recorded stack gas moisture content

Table 3. Comparative MMCEMS and Method 29 Results.

October 14th Mendocino County Soil 2-hour run

Metal	Percent Moisture	MMCEMS (µg/dscm)	Method 29 (µg/dscm)
Al	25.7	30.6	17.1
Fe	25.7	11.2	9.88
Pb	25.7	3.30	0.31
Ti	25.7	4.37	1.84

October 14th Mendocino County Soil 3-hour run

Metal	Percent Moisture	MMCEMS (µg/dscm)	Method 29 (µg/dscm)
Al	27.8	14.4	12.4
Fe	27.8	15.8	108
Pb	27.8	8.67	1.31
Ti	27.8	2.70	2.67

October 15th Gray Epoxy Paint 2-hour run

Metal	Percent Moisture	MMCEMS (µg/dscm)	Method 29 (µg/dscm)
Al	41.4	71.1	38.8
Fe	41.4	12.3	83.9
Pb	41.4	19.2	6.24
Ti	41.4	21.5	26.7

values for each run. The MMCEMS values were obtained by calculating a block average of the individual instantaneous measurements made during each test session. The MMCEMS measurements were made at approximately 60-second intervals and concentrations of all metals were determined simultaneously during each measurement. Normally, when a reliable estimate of stack gas moisture content is known prior to monitoring, that factor is included in the automatic computation of stack gas metal concentrations in units of micrograms per dry standard cubic meters. However, for the present test exercise for which stack gas moisture content was uncertain, raw concentration data was corrected only for stack gas temperature and pressure. Once the stack gas moisture values (determined by U.S. EPA Method 4) were made available, the MMCEMS stack gas metal concentrations were adjusted accordingly. All stack gas metal concentrations are reported in units of micrograms per dry standard cubic meter.

An assessment of the relative agreement or disagreement between the MMCEMS-measured metal concentrations, and those determined by Method 29, must take into account several influential factors. These include the relatively low levels of detected metals, the impact of contamination and method blank concentrations (for Method 29 results) at these low levels, and the existence of MMCEMS spectral interferences. While reasonable agreement between the MMCEMS and Method 29 results was achieved for certain metals, in other instances, agreement was poor. For example, during two of the runs represented in Table 3, iron concentrations measured by Method 29 were appreciably higher than those measured by the MMCEMS. Given the magnitude of the method blank for iron (see Air Pollution Assessment #42-EK-8196-99), there is a distinct possibility that iron contamination of sampling train components and sample solutions may have made a sizeable contribution to the total mass of iron reported, hence the discrepancy with the MMCEMS results.

It is curious however, that the iron results for run #1 were in close agreement. In each of the three test runs, MMCEMS-detected lead concentrations were consistently higher than the corresponding Method 29 results. This discrepancy may have been due in part to incomplete correction of a molecular spectral interference in the MMCEMS plasma that gave rise to erroneously high measurements of lead concentrations. In all three runs, the MMCEMS demonstrated good agreement with Method 29 for titanium. Titanium is unlikely to pose as serious a method blank problem as the more ubiquitous elements iron and aluminum, which indeed showed elevated Method 29 blank values. The MMCEMS also has a much lower detection limit for titanium than any of the three other detected metals. Detection of titanium is also simplified the absence of a spectral interference such as that affecting lead.

An added complication in the comparison of MMCEMS and Method 29 results is the absence of steady-state metal emissions. Conditions such as these may favor the reference method such as Method 29 that continuously integrates the collected sample.

The limited test data acquired during the October 1999 test exercise is not adequate to support a rigorous assessment of the analytical performance of the TraceAIR MMCEMS under the conditions encountered during FIT test operation of the plasma arc hazardous waste treatment system. Detectable levels of only four metals were recorded by the MMCEMS over the course of three test runs involving two different waste feed materials. For some of the detected metals, the measured metal concentrations were in proximity to the MMCEMS detection limits of those metals. At these levels, measurement precision is not optimum.

Ideally, an evaluation of the performance of the MMCEMS in conjunction with a particular source category should be made under conditions in which operation of the source, and stack gas conditions are highly stable, and numerous metals are represented in the stack gas stream. This stability is essential for allowing adjustment of the MMCEMS in order to achieve optimum performance in accordance with source conditions. Unfortunately, in the case of the plasma arc waste treatment system rarely was the entire system operated at even pseudo-stable conditions for a sufficient period of time to allow the necessary adjustment of the MMCEMS. Often, during what would appear to be stable plasma arc operating conditions, the MMCEMS would be adjusted and calibrated only to require re-adjustment and subsequent re-calibration shortly thereafter to accommodate a considerable shift in stack gas conditions. Of specific concern was the fluctuating stack gas moisture content. While the MMCEMS appeared to easily accommodate the highest levels of moisture encountered during the test exercise, it was difficult to identify optimum operating parameters that best accommodated the entire range of stack gas moisture loading encountered. Accordingly, the varying conditions described above were likely not conducive to supporting a meaningful evaluation of the robustness and analytical performance of the MMCEM. In qualitative terms, the TraceAIR MMCEMS performed well considering the high and often varying levels of stack gas moisture encountered, especially during the introduction of the gray epoxy paint. This finding validates the utility of many of the process improvements that have been made to the TraceAIR system specifically to improve the tolerance of the instrument to high moisture levels in the stack gas. These improvements included the implementation of vacuum eductors to replace conventional vacuum pumps for providing suction for sample extraction and transport.

To achieve a comprehensive evaluation of the performance of the MMCEMS on a particular source, stack gas metal emissions should be present at concentrations that are comparable to the applicable standard. This can be achieved by various means including "spiking" of the waste feed with various metals or deliberate introduction of metal aerosols into the exhaust gases. Neither option was available during the present test exercise, and given the primary purpose of this exercise, i.e., evaluation of the operation of the PAHWTS, and local regulatory restrictions, this was understandable. Accordingly, future test exercises aimed specifically at evaluating the performance of the MMCEMS as a compliance tool should include provisions for creating stack gas metal emissions of appreciable magnitude to allow meaningful comparisons between the MMCEMS and reference method.

Although the number of experiments conducted during the PAHWTS FIT test was not sufficient to support a second RATA exercise, the analytical results obtained served the purpose of confirming the compatibility of the MMCEMS for providing compliance monitoring in conjunction with operation with the PAHWTS. While it was likely that more metals were not be detected by either the MMCEMS or Method 29 than were detected, it was useful to assess the degree to which the MMCEMS was capable of returning values indicating non-detect levels of metals that were not present. This was confirmed by the Reference Method 29 results.

From a qualitative perspective, the FIT test provided an opportunity to examine the efficacy of recently made process improvements that were intended to mitigate the adverse effects of high stack gas moisture levels. Assessment of these aspects was achieved through examination of the analytical results (MMCEMS vs. Method 29) and overall robustness of the MMCEMS hardware under the anticipated high moisture conditions.

As a result of recent process improvements intended to mitigate the adverse effects of high stack gas-moisture levels, the analytical objectives were achieved. Hardware and methodology modifications proved adequate to accommodate the stack gas moisture effects, and demonstrate robust operation. It is important to note that the MMCEMS was fully automated and designed to function without human assistance. Freedom from moisture-related problems validated this aspect of the system's performance.

While the Reference Method 29 stack testing results generated by USACHPPM during the various waste treatment sessions provided an assessment of time-averaged metal emissions as a result of the integrative nature of that technique, those results were not available for 2-4 weeks following the conclusion of the FIT test. The Method 29 results provided a retrospective indication of the efficacy of the PAHWTS process and that of the pollution abatement system. The MMCEMS provided nearly instantaneous, time-resolved measurements of stack gas metal emissions that proved to be of significant value in facilitating process improvements for the PAHWTS during the FIT test. The MMCEMS provided an additional advantage in that it documented the changing stack gas metal emissions at the beginning of waste feed introduction into the PAHWTS and at several critical points during the waste treatment cycle. This was an unprecedented capability and signified the potential value of the MMCEMS as a process monitor as well as a compliance assurance tool. As a result of the PAHWTS FIT test, the MMCEMS will provide its potential as an integral part of a modern waste treatment facility, and accordingly, should warrant consideration for inclusion in the final installation of the PAHWTS at its intended site.

5.0 COST ASSESSMENT

5.1 TOOELE ARMY DEPOT DEMONSTRATION/VALIDATION EXERCISE

The TraceAIR™ MMCEMS is intended for use as an automated piece of equipment, requiring only minimum human attention at startup, shutdown, and during preventative maintenance. During the demonstration exercises, the MMCEMS was manned on an intermittent basis. This was done primarily to coordinate the MMCEMS measurements with the beginning and end of each Method 29 sampling session. The labor expenses associated with the demonstration exercises also include equipment setup, takedown, data archiving, and various administrative tasks. The cost assessment for these exercises will reflect those labor expenses, although in actual future deployment, such labor expenses would be all but eliminated. The exercise conducted in May, 1999 represented the definitive demonstration and validation effort for the ESTCP sponsored project. Preliminary testing of the prototype MMCEMS at the same site was also conducted in 1998. Table 4 provides itemized cost estimates for conducting the two-week demonstration/validation exercise at Tooele Army Depot.

Table 4. Itemized Cost Estimate for Demonstration/Validation Exercise: Operation of the MMCEMS at Tooele Army Depot.

Cost Item	Cost per Hour	Total Hours	Total Cost
Argon gas	$3.20	120	$384
Electricity	$1.00	120	$120
Labor (P.I.)*	$110	240	$26,400
Misc. Consumables	-	-	$600
Transportation (P.I.)	-	-	$3,000
Misc. Travel (P.I.)	-	-	$3,000
Method 29 Testing**	-	-	$35,000
U.S. EPA***	-	-	$40,000

*Labor expenses for Principal Investigator include preparation of equipment for transport to test site, equipment setup and takedown, preparation of equipment for transport to home facility, data and test report preparation.

**Method 29 testing conducted by USACHPPM; expenses include travel, transport of equipment, fees for post-test laboratory analyses, and generation of an air pollution assessment report.

***Validation testing witnessed; test results reviewed and verified by two U.S. EPA officials.

5.2 PAHWTS (RETECH CORPORATION) DEMONSTRATION/VALIDATION EXERCISE

The demonstration/validation exercise conducted in conjunction with the PAHWTS was similar in execution to that conducted at Tooele Army Depot with several important exceptions that are reflected in the various costs associated with this exercise. While similar logistical efforts were required to participate in the PAHWTS FIT test, the number of test runs were significantly less than that required for the test at TEAD. Since the USACHPPM staff conducted Method 29 testing as part of the FIT test, there was no expense to the present demonstration/validation project for their services, which were valued at approximately $20,000 for the metal emission testing alone. This exercise was not witnessed by the U.S. EPA, nor did anyone from this agency request a review of the test data. Table 5 provides itemized cost estimates for conducting the two-week demonstration/validation exercise at the Retech facility.

Table 5. Itemized Cost Estimate for Demonstration/Validation Exercise: Operation of the MMCEMS at Retech Facility (PAHWTS).

Cost Item	Cost per Hour	Total Hours	Total Cost
Argon gas	$3.20	120	$384
Electricity	$1.00	120	$120
Labor (P.I.)*	$110	240	$26,400
Misc. Consumables	-	-	$300
Transportation (P.I.)	-	-	$3,000
Misc. Travel (P.I.)**	-	-	$3,000
Method 29 Testing***	-	-	$20,000

*Labor expenses for Principal Investigator include preparation of equipment for transport to test site, equipment setup and takedown, preparation of equipment for transport to home facility, data and test report preparation.

**Initial FIT test postponed from July 1999 to October 1999 requiring additional travel and labor for P.I.

***Method 29 testing conducted by USACHPPM as part of FIT test.

5.3 IMPLEMENTATION COST CONSIDERATIONS

The current manufacturer's quote for the cost of a TraceAIR™ MMCEMS for installation on multiple APE 1236 furnaces is approximately $320K. This figure represents a significant discount relative to the acquisition cost to private industry. Further discounts may depend on such factors as the number of units purchased, and the time of purchase. The cost of annual operation of a $300K MMCEMS operating 24 hours a day, including amortization of the unit over 5 years, has been independently estimated at $80K-$90K (Ref. 13). Using the $320K capital cost figure for the TraceAIR™ MMCEMS and adjusting the previous annual estimate to reflect a higher unit cost, and an operation of 15 hrs/day 5 days/week results in an estimated annual cost of $75K-$80K/yr. Amortized over 10 years the estimated cost drops to $48K-$53K/yr.

Cost savings associated with the MMCEMS maybe realized through, but not limited to reduced reliance on waste feed characterization, relaxation of waste feed restrictions, and avoidance of fines from exceeding emission limits. Cost savings from reduced reliance on waste feed characterization would be based on reduction of labor costs for research and documentation. Storage and surveillance costs would also be reduced through an increase in the disposal rate. Relaxation of waste restrictions could increase throughput and produce costs savings by reducing the amount of operating time required to dispose of a given amount of materiel. In some cases the compliance assurance afforded by an MMCEMS may provide the basis for continuing operations on an APE 1236 M1 that emits levels of metals at or near regulatory limits.

The following example of potential cost savings was provided by the TEAD Ammunitions Operations Directorate (Ref. 14). Under current procedures Cartridge Actuated Devices (CADs) and Propellant Actuated Devices (PADs) are received in large numbers, inspected, and stored at TEAD in both earth-covered and aboveground magazines. Because of the large quantity of different stock numbers of the CADs/PADs that arrive, storage of these items is very inefficient. TEAD has expended in excess of $1,000,000 over the last two years to consolidate CADs/PADs. TEAD estimates if the CADs/PADs were eliminated from the inventory an annual savings of approximately $75,000 in inventory costs would result. However, before the CADs/PADs can be run through the APE 1236 furnace the waste characterization must be determined. Of the approximately 2,500 types of CADs/PADs currently stored at TEAD, waste characterization on only about 25 of the items exists. Many of the commercially manufactured CADs/PADs are obsolete and therefore in many cases it is difficult to obtain information on the composition of these items. When waste characterization is available for a particular item, the item must be added to the furnace operating permit at a cost of approximately $1,000 per item.

Since compliance assurance achieved through the use of a MMCEMS can lessen reliance on waste characterization or feed stream analysis, significant cost savings can be achieved. In the case of CADs/PADs, a complete elimination of waste feed characterization requirements would result in proportional reductions in inspection, surveillance, handling, storage, and permitting costs.

As stated above, one of the principal incentives for implementation of a MMCEMS capability is increased throughput of waste munitions. At present, the APE 1236 furnaces are operated in a manner intended to ensure compliance by restricting the hourly rate at which waste munitions can be processed. By limiting the number of pounds per hour of metal compounds entering the furnace, a proportional limitation of hazardous metal emissions can be achieved. This relationship is based on both detailed waste characterization and the results of trial burn testing with representative waste feed items. The disadvantage of this approach is that there is no provision for interim compliance assurance. A MMCEMS however, more than adequately fulfills this requirement.

The objective of the demilitarization process is to reduce the stockpile of a particular item as rapidly as possible, eliminate storage expenses, and make storage space available for new materials. The rate at which the stockpile of a particular item is reduced is ultimately limited by feed rate restrictions stipulated in the furnace operating permit. Accordingly, any appreciable increase in the net throughput of the furnace would result in a more rapid depletion of the stockpile. For reasons provided above, implementation of a MMCEMS is viewed as a viable means of achieving these increases. The example given in the following discussion illustrates how this action might bring about cost savings and to what extent these savings can be realized.

For most of FY2000, the APE 1236 furnace at TEAD was work-loaded for deactivation of 20-mm ammunition containing both high explosive projectiles and tracer projectiles. On average, 20-mm rounds of this type are processed at a rate of 15,000 per day, with each day consisting of approximately 15 hours of active furnace operation. The weight of each 20-mm round is 0.58 pounds and therefore the average throughput for these items is approximately 8,700 pounds per day, or 43,500 pounds per week.

At the present time, it costs approximately $1500 per ton to incinerate waste munition items such as the 20-mm rounds described above (Ref. 15). For other munition items, costs may vary depending on composition and complexity. The operation costs for the APE 1236 furnace are based on accumulated, hourly expenses for labor and overhead, energy, and equipment maintenance. The approximate cost of operating the furnace for one week to process a total of 43,500 pounds of 20-mm ammunition is $32,625.

The adoption of continuous monitoring as an alternative to feed rate restrictions, should in principle, result in regulatory allowance of modest increases in hourly throughput of waste munitions, and in some cases, elimination of feed rate restrictions, since compliance with respect to metal emissions can be assured directly (Ref. 16). Under these conditions, a significant reduction in the per-item cost of processing could be realized, based on the notion that the APE 1236 furnace is presently operated in an inefficient, waste-starved regime, and that furnace costs would remain relatively constant despite any appreciable increase in waste throughput. For example, if a nominal 10 percent increase in the hourly waste feed rate for the 20-mm ammunition could be achieved the present net weekly throughput of 43,500 pounds would be increased to 47,850 pounds. It is reasonable to assume that this increase could be accommodated with no additional furnace operating cost burden (e.g., labor, fuel oil). Thus, there would be a potential reduction in processing cost from the present $1500 per ton to $1364 per ton, which would translate to weekly savings of $3060, or yearly savings of $159,120.

5.3.1 Potential for Payback on MMCEMS Capital Cost

As discussed in section 5.3, if the cost of the acquisition of the MMCEMS were amortized over a five-year period, annual costs of ownership and acquisition, including ancillary expenses for argon, energy, consumable items, etc., would be $75-80K. If operational cost savings of the magnitude predicted above are realized through increases in waste munitions throughput, the estimated MMCEMS acquisition and operating costs would be easily offset and a net annual savings of as much as $79,000 may result.

6.0 IMPLEMENTATION ISSUES

6.1 COST OBSERVATIONS

There were no significant deviations that affected project costs. The actual costs did not differ significantly from the initial estimates.

6.2 PERFORMANCE OBSERVATIONS

The goal for the performance of the MMCEMS was a relative accuracy of 20 percent or less, when compared to the reference method test results, for each of the 10 target metals. Twelve test runs were conducted, from which 9 sets of data were selected for the data analysis. No problems resulting from the installation/operation of the MMCEMS were encountered during testing, and the final testing was accomplished according to schedule.

6.3 OTHER SIGNIFICANT OBSERVATIONS

Significant changes in the operation conditions of the APE 1236 M1 could affect implementation of the MMCEMS. Subsequent to the verification test effort, modifications were made to the design of the production APE 1236 M1 Hazardous Waste Incinerator at TEAD. These changes have resulted in a significant increase in the stack operating temperature. The redesign is currently undergoing evaluation. Based on the results of this evaluation the modification may be incorporated into all existing 1236 M1s in the APE inventory. As a consequence, a follow-on effort was funded by the Defense Ammunition Center to adapt the MMCEMS to operate at the elevated stack temperature. Preliminary testing of the redesigned MMCEM sampling system has indicated that the performance of the MMCEMS will not be affected. Formal testing is currently scheduled for July 2000.

6.4 REGULATORY AND OTHER ISSUES

A working relationship was established with the EPA Office of Air Quality Planning and Standards, Emission Measurement Center (EMC), prior to the initiation of this ESTCP effort. The EPA EMC was involved with the planning of the verification test effort, having reviewed the test plan and provided comments and recommendation prior to finalization. The EPA EMC was present during the verification testing, and was responsible for the review and evaluation of the test results.

The State of Utah Department of Environmental Quality (DEQ) became familiar with the MMCEMS through visits to TEAD during field testing prior to the ESTCP verification test effort. A representative of EPA Region 8 also visited the test site during prior MMCEMS field testing at TEAD. Permits for the prior field tests, as well as the verification testing were issued by the DEQ. The DEQ was briefed on the ESTCP verification test effort prior to initiation, and visited the site during verification testing.

The results of this test exercise conclusively validated the suitability of the TraceAIR™ MMCEMS for this specific compliance monitoring application. The test data was submitted to the U.S. EPA OAQPS-EMC for official approval of use of the TraceAIR™ MMCEMS in similar munitions demil applications. The EPA EMC reviewed the test results and issued a determination that the MMCEMS,

with limited exception, “has met and exceeded the performance criteria” outlined in the EPA's Performance Standard 10, which outlines performance requirements for MMCEMSs. The system became the first, and at this time only MMCEMS to met the EPA performance requirements. The EPA EMC also investigated having the MMCEMS participate in the EPA's Environmental Technology Verification (ETV) program. It was determined, however, that the ESTCP verification effort had gone above and beyond what would be required for the ETV program, and that there would be little or no benefit gained from participating in the ETV program. The EPA is currently working to disseminate information on the performance of the MMCEMS to the EPA Office of Solid Waste and regional EPA permitting authorities in order to gain widespread regulatory acceptance.

The savings realized through use of an MMCEMS will depend largely on the degree of regulatory acceptance. Current MACT regulations encourage incentives for the use of an MMCEMS, but any determination to allow such incentives would be made by regional EPA permitting authorities, and the ultimate decision lies with state environmental permitting authorities.

6.5 LESSONS LEARNED

The key to the success of the verification test effort was the partnership with the EPA EMC. The familiarity of the EMC with air monitoring helped identify a problem with the sampling system of the MMCEM. The EMC recommended that Dr. Andrew McFarland be consulted concerning his design of the shrouded probe. The shrouded probe was incorporated into the MMCEM sampling system and helped eliminate the sampling losses that plagued early test efforts. Also, having the EMC review and comment on the test plan for the verification test effort helped ensure that the data generated during testing was valid and acceptable for comparison against pertinent EPA standards/requirements.

6.6 END-USER ISSUES

Among competing technologies, the TraceAIR™ MMCEMS has demonstrated unmatched sensitivity, range of simultaneously detected metals, and an unprecedented level of automation. As a result of a successful technology transfer campaign, and an ambitious effort to patent many of the various features and methodologies that comprise the TraceAIR™ MMCEMS, the TraceAIR™ MMCEMS is at the time of this writing, the only technology in its category that is commercially available. A mutually-beneficial technology license agreement between the Navy and private industry has been negotiated that will provide a source from which the DoD can acquire this technology, and generate royalty revenues for DoD, for non-government sales of the MMCEMS.

The level of vigilance, and hence, compliance assurance that a MMCEMS affords, will be the determining factor in terms of what regulatory incentives can be anticipated as a consequence of their implementation. For installation of a MMCEMS with capabilities similar to those afforded by the present system, maximum operational advantages and benefits can be expected including relaxation of waste feed rate restrictions, relaxation or elimination of the requirement for detailed waste feed characterization, simplification of furnace permitting processes, and elimination of the need to modify furnace permits to accommodate new waste feed items. The extent to which competing MMCEMS technologies fail to provide the required capabilities will dictate what regulators will allow in return. As the level of vigilance and compliance assurance is reduced, because of a prospective system's inability to measure all 14 HAP metals, to measure all metals simultaneously,

or to provide rapid response time, present requirements for waste feed characterization and feed rate restrictions are more likely to be maintained.

Beyond providing compliance assurance for the APE 1236 ordnance deactivation furnaces, the MMCEMS technology is potentially suitable for a number of diverse DoD applications. One such application for which the TraceAIR™ MMCEMS has been successfully demonstrated is monitoring metal emissions from processes involving contained firing of tactical rocket motors for disposal or diagnostic purposes. In 1998, the TraceAIR™ MMCEMS was used to record time-resolved emission data for lead during the contained firing of Shillelagh anti-tank rocket motors. The MMCEMS data confirmed the efficiency and adequacy of filter elements used to remove copious amounts of particulate matter from the exhaust gases of the containment vessel following completion of the motor firing. The MMCEMS has also been considered for applications involving diagnostic measurements for emissions from detonation chambers such as that located at Blue Grass Army Depot in Kentucky. Finally, the Office of the Program Manager for Chemical Demilitarization has expressed its intent to install as many as four TraceAIR™ MMCEMS at the Tooele Chemical Agent Disposal Facility (TOCDF) in Utah, as part of a strategy to ensure compliance and lessen to a certain extent, its present reliance on waste feed stream analysis.

This page left blank intentionally.

7.0 REFERENCES

1. A Shrouded Aerosol Sampling Probe McFarland, A.R.; Ortiz, C.A.; Moore, M.E.; DeOtte, R.E.; Somasundaram, S. Environmental Science and Technology 1989, 23, 1487-1492.

2. EPA Test Method 5, Determination of Particulate Matter Emissions from Stationary Sources, 40 CFR 63, Revised July 1, 1996.

3. ESTCP Demonstration Plan. A Continuous Emissions Monitor for Hazardous Air Pollutant Metals. July 25, 2000.

4. Test Plan: Plan for Verification Testing of a Prototype Multimetals Continuous Emissions Monitor, Naval Air Warfare Center Weapons Division, March 1999.

5. Test Plan: Performance Evaluation of the Multimetal Continuous Emissions Monitor: Operating in Conjunction with the Plasma Arc Hazardous Waste Treatment System, Naval Air Warfare Center Weapons Division, June, 1999.

6. U.S. EPA PS-10. Proposed Performance Specifications for Multimetals Continuous Emissions Monitors, U. S. Environmental Protection Agency, Office of Air Quality Planning and Standards, Emission Measurement Center, August 1997.

7. EPA Test Method 29, Determination of Metals Emissions from Stationary Sources, 40 CFR 63, Revised July 1, 1996.

8. EPA Method 6010B Inorganics by ICP Atomic Emission Spectrometry, SW-846 Test Methods for Evaluating Solid Waste, Ch.3.3, rev. December 1, 1996.

9. EPA Method 6020 Metals by ICP Mass Spectrometry, SW-846 Test Methods for Evaluating Solid Waste, Ch.3.3, rev. December 1, 1996.

10. Report: Performance Evaluation of the TraceAIR™ Multimetals Continuous Emissions Monitor, Naval Air Warfare Center Weapons Division, July 1999.

11. ESTCP Final Report, A Continuous Emissions Monitor for Hazardous Air Pollutant Metals, Project # 199807, July 25, 2000.

12. Performance Testing of a Multimetals Continuous Emissions Monitor M.D. Seltzer, Journal of the Air and Waste Management Association 50 (2000) 1010-1017.

13. A.M. Gomès, C. Trassy, A Almi, F. Seddiki and S. Hassaine. Comparison of Air and Argon Plasmas in Gaseous Elemental Pollutant Analysis for Process Control and Environment. High Temperature and Material Processes 1 (1997) 461- 472.

14. Theoretical Estimate of Cost Savings Associated with Continuous Monitoring of Metal Emissions for Compliance Assurance Purposes. Mr. Ron Snyder, Ammunition Operations Directorate, Tooele Army Depot, Tooele, Utah 84074.

15. Estimated Cost of Incineration for Small-arms Conventional Ammunition. Mr. Karl Bleyhl, U.S. Army Operations Support Command, Ammunition Peculiar Equipment, Rock Island, IL, January, 2001.

16. Mr. Rick Page, State of Utah Department of Environmental Quality, Division of Solid and Hazardous Wastes, May 1999.

ADDITIONAL RELEVANT PUBLICATIONS

- Instrumentation for Continuous Emissions Monitoring of Airborne Metals M.D. Seltzer and R.B. Green Process Control and Quality 6 (1994) 37-46.

- Instrumental Considerations for High Sensitivity Continuous Emissions Monitoring of Hazardous Air Pollutant Metals M.D. Seltzer Process Control and Quality 7 (1995) 71-77.

- Inductively Coupled Argon Plasma Continuous Emissions Monitor for Hazardous Air Pollutant Metals M.D Seltzer and G.A. Meyer Environmental Science and Technology 31 (1997) 2665-2672.

- Continuous Air Monitoring Using Inductively Coupled Plasma Atomic Emission Spectrometry: Correction of Spectral Interferences Arising from CN Emission M.D. Seltzer Applied Spectroscopy 52 (1998) 195-199.

APPENDIX A

POINTS OF CONTACT

Dr. Michael D. Seltzer
Naval Air Warfare Center Weapons Division
China Lake, CA 93555
760-939-1608

Mr. Curtis Anderson
TACOM-ARDEC
Picatinny Arsenal, NJ 07806-5000
973-724-2138

Mr. Raymond Goldstein
TACOM-ARDEC
Picatinny Arsenal, NJ 07806-5000
973-724-4122

Mr. Mark Nitzsche
Present address:
Naval Surface Warfare Center
Indian Head Division
Detachment Earle
Colts Neck, NJ 07722-5023
732-866-2922

Mr. John Bosch
EPA Office of Air Quality
Planning and Standards
Emissions Measurement Center
MD-19
Research Triangle Park, NC 27711
919-541-5583

Mr. Tom Logan
EPA Office of Air Quality Planning and Standards
Emissions Measurement Center
MD-19
Research Triangle Park, NC 27711
919-541-5541

Mr. Bruce Sartwell
Naval Research Laboratory
Washington, D.C.
202-767-0722

Mr. Darwin Jones
Ammunition Operations Directorate
Tooele Army Depot
Tooele, Utah 84074
435-833-2004

Mr. Dee Russell
Ammunition Operations Directorate
Tooele Army Depot
Tooele, Utah 84074
435-833-2621

Mr. Ron Snyder
Ammunition Operations Directorate
Tooele Army Depot
Tooele, Utah 84074
435-833-2621

Mr. Dave Woodworth
Environmental Division
Tooele Army Depot
Tooele, Utah 84074
435-833-3504

Mr. Mike Pattison
U.S. Army Center for Health Promotion and Preventive Medicine
Aberdeen Proving Ground, MD 21010
410-671-3500

Mr. Bob Wishart
U.S. Army Center for Health Promotion and Preventive Medicine
Aberdeen Proving Ground, MD 21010
410-671-3500

Dr. Geoff Coleman
Thermo Elemental
27 Forge Parkway
Franklin, MA 02038
508-553-1283

Mr. Jerry Parkin
Utah Department of Environmental Quality
Division of Solid and Hazardous Waste
Salt Lake City, UT
801-538-6170

Mr. Rick Page
Utah Department of Environmental Quality
Division of Solid and Hazardous Waste
Salt Lake City, UT
801-538-6170

Mr. Jim Wheeler
U.S. Army Defense Ammunition Center
McAlester, OK 74501
918-420-8901

Prof. Andrew McFarland
Department of Mechanical Engineering
Texas A&M University
College Station, TX 77843
409-845-2204

Retech Corporation
100 Henry Station Road
Ukiah, CA
707-462-6522

Mr. Karl Bleyhl
U.S. Army Operational Support Command
Ammunition Peculiar Equipment
Rock Island, IL
309-782-7284

ESTCP Program Office

901 North Stuart Street
Suite 303
Arlington, Virginia 22203

(703) 696-2117 (Phone)
(703) 696-2114 (Fax)

e-mail: estcp@estcp.org
www.estcp.org