CU712-8

SPECIAL REPORT 98-5

Bioremediation of Hydrocarbon-Contaminated Soils and Groundwater in Northern Climates

Charles M. Reynolds, W. Alan Braley, Michael D. Travis, Lawrence B. Perry, and Iskandar K. Iskandar

March 1998

Abstract: A field demonstration and research project was conducted in Fairbanks, Alaska, to demonstrate, evaluate, and document the construction and operation of three selected bioremediation technologies—landfarming, recirculating leachbeds, and infiltration galleries. Landfarming involves adding water and nutrients to contaminated soil to stimulate microbial activity and contaminant degradation. Infiltration galleries are dynamic in-situ treatment systems designed to stimulate microbial activity and subsequent hydrocarbon degradation by circulating nutrient- and oxygen-amended water through petroleum-contaminated soil. Recirculating leachbeds, in a way similar to slurry reactors, aerate and mix nutrients with contaminated soil, and can be built as on-site bioreactors. Estimated biotreatment costs in the landfarm were between $20 to $30 per cubic yard ($15 to $23 per cubic meter). Nutrient placement has been demonstrated to be a critical factor, even though the site is tilled and mixed frequently. Success of the infiltration gallery was more difficult to document. Benzene was detected at less than 2 ppb and BTEX levels were less than 5 ppb for water extracted from the pumping well during 1992, which is significantly lower than the 1991 levels. Problems were encountered during the brief operation of the recirculating leach bed, but a similar system has performed well. Relatively simple, low-cost techniques provided significant potential for improving degradation rates.

How to get copies of CRREL technical publications:

Department of Defense personnel and contractors may order reports through the Defense Technical Information Center:

DTIC-BR SUITE 0944
8725 JOHN J KINGMAN RD
FT BELVOIR VA 22060-6218
Telephone 1 800 225 3842
E-mail help@dtic.mil
msorders@dtic.mil
WWW http://www.dtic.dla.mil/

All others may order reports through the National Technical Information Service:

NTIS
5285 PORT ROYAL RD
SPRINGFIELD VA 22161
Telephone 1 703 487 4650
1 703 487 4639 (TDD for the hearing-impaired)
E-mail orders@ntis.fedworld.gov
WWW http://www.fedworld.gov/ntis/ntishome.html

A complete list of all CRREL technical publications is available from

USACRREL (CECRL-LP)
72 LYME RD
HANOVER NH 03755-1290
Telephone 1 603 646 4338
E-mail techpubs@crrel.usace.army.mil

For information on all aspects of the Cold Regions Research and Engineering Laboratory, visit our World Wide Web site: http://www.crrel.usace.army.mil

Special Report 98-5

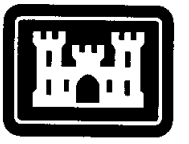

US Army Corps of Engineers®
Cold Regions Research & Engineering Laboratory

Bioremediation of Hydrocarbon-Contaminated Soils and Groundwater in Northern Climates

Charles M. Reynolds, W. Alan Braley, Michael D. Travis, Lawrence B. Perry, and Iskandar K. Iskandar

March 1998

Prepared for
OFFICE OF THE CHIEF OF ENGINEERS

Approved for public release; distribution is unlimited.

PREFACE

This report was prepared by Dr. Charles M. Reynolds, Research Physical Scientist, Geochemical Sciences Division, Research and Engineering Directorate, U.S. Army Cold Regions Research and Engineering Laboratory; W. Alan Braley, Alaska Department of Transportation and Public Facilities, Fairbanks International Airport, Fairbanks, Alaska; Michael D. Travis, formerly of AGRA Earth and Environmental, Inc., Anchorage, Alaska; Lawrence B. Perry, Physical Science Technician, and Dr. Iskandar K. Iskandar, former Chief, Geochemical Sciences Division, Research and Engineering Directorate, CRREL.

Support for this work was provided by funding from the U.S. Army Corps of Engineers Construction Productivity Advancement Research (CPAR) program, the Alaska Department of Transportation and Public Facilities (AKDOT&PF), the U.S. Army Corps of Engineers Environmental Quality Technology Work Unit, AF25-RT-005, *Feasibility of Low Temperature Biotreatment of Hazardous Materials*, and the SERDP Project, no. 712, *Enhancing Bioremediation Processes in Cold Regions*.

Peter Smallidge, former CPAR Manager, CRREL, and Dr. Edward Smith, Team Leader, U.S. Army Construction Engineering Research Laboratory, assisted in the initial project organization. Acknowledgments are given to Dr. Edward Brown and Lynn Rawls-McAfee, University of Alaska, Fairbanks, for information on the microbial activity data, and to Michael Lily, U.S. Geological Survey, for the water data. Laboratory analyses at CRREL were assisted by Chad S. Pidgeon, Ronald Bailey, Susan Bebeau, Patricia Schumacher, and Dianne Reynolds. Technical review and suggestions to the manuscript were made by Paul Currier and Dr. Charles Racine of CRREL.

The contents of this report are not to be used for advertising or promotional purposes. Citation of brand names does not constitute an official endorsement or approval of the use of such commercial products.

CONTENTS

	Page
Preface	ii
Executive summary	iv
Introduction	1
Background	1
Objectives and rationale for field research	1
Project location	1
Site history	3
Site investigations	4
Subsoil and groundwater characteristics	4
Field remediation procedures	5
Landfarm	5
Infiltration gallery	11
Recirculating leachbed	14
Discussion and conclusions	16
Landfarm	16
Infiltration gallery	17
Recirculating leachbed	17
Literature cited	17
Bibliography	18
Abstract	19

ILLUSTRATIONS

Figure

1.	Project location	2
2.	Zone of contaminated soil following tanker spill	4
3.	Landfarm	5
4.	Areas of soil excavation for landfarm treatment	8
5.	Soil TPH levels	10
6.	Infiltration gallery and monitoring wells	12
7.	Recirculating leachbed system	15

TABLES

Table

1.	Landfarm analytical results	9
2.	Results of organic vapor meter survey for the landfarm	11
3.	Infiltration gallery discharge monitoring	13

EXECUTIVE SUMMARY

The objectives of the Construction Productivity Advancement Research (CPAR) field demonstration and research project, *Bioremediation of Hydrocarbon Contaminated Soils and Groundwater in Northern Climates*, were to demonstrate, evaluate, and document the construction and operation of three selected bioremediation technologies—landfarming, recirculating leach beds, and infiltration galleries—in cold regions. Before this CPAR program was begun, bioremediation had not been used extensively in cold regions.

Landfarms are lined, bermed areas where soil is treated by adding and mixing water and nutrients. A collection system may be installed inside the liner to collect leachate, which then can be recirculated. In this project, the leachate was recirculated through a mixing tank for nutrient additions and then through spray irrigation lines onto the surface of the landfarm site. The liner surface was sloped to ensure that the liner directed leachate into the collection system.

Infiltration galleries are dynamic in-situ treatment systems designed to stimulate hydrocarbon degradation by enhancing microbial activity. Microorganisms are stimulated by circulating nutrient and oxygen-amended water through soil contaminated by petroleum. The system used in this project included a groundwater pumping well, nutrient addition and aeration capabilities, and an infiltration gallery to encourage transport of the enhanced groundwater back into the soil.

Recirculating leachbeds are similar to slurry reactors. The concept is to develop a lined containment area to serve as an on-site bioreactor. Either a pit, generally resulting from the excavation, a bermed perimeter, or a combination can be used, depending on available materials. In this project, contaminated soil was placed into the bioreactor and, through an inexpensive PVC distribution system, aerated and nutrient-amended water was recirculated into the bottom of the bioreactor, upwards through the contaminated soil, and then through the overlying ponded and aerated water. Skid-mounted mechanical systems included a mixing tank and circulation pumps for water and air.

The products of this project include field demonstrations of each technology, accompanying documentation on design and construction, results of operation in cold regions, and numerous technology transfer activities, such as site visits and tours during the construction and operation of the treatment facility. The designs have been provided to the U.S. Army Engineer District, Alaska, as well as commercial engineering firms.

To date, the Fairbanks bioremediation test site has completed remediating the first batch of contaminated soil in the landfarm. The estimated costs were between $20 to $30 per cubic yard ($15 to $23 per cubic meter). Nutrient placement has been demonstrated to be a critical factor, even though the site is tilled and mixed frequently. Relatively simple, low-cost techniques provided significant potential for improving degradation rates. The project findings include an estimate of the spatial variability in degradation rates within the landfarm and measurements of degradation rates obtainable in a cold region landfarm. These results are significant for developing other low-cost bioremediation systems, such as those using combined treatment technologies. Extension to biotreatment systems that include extremely low inputs, such as natural attenuation, has also been considered.

Processes enhanced by operation of the infiltration gallery were more difficult to document. During the operation in 1992, the benzene and BTEX (benzene,

toluene, ethylbenzene, and xylene) concentrations in groundwater samples from the six monitoring wells surrounding the infiltration gallery decreased to below detectable limits. Benzene was detected at less than 2 ppb (μg/g) and BTEX levels were less than 5 ppb (μg/g) for water extracted from the pumping well during 1992, which is significantly lower than the 1991 levels.

Problems were encountered during the brief operation of the recirculating leach bed. The air manifold floated to the surface, but this could be readily solved by using a simple system to anchor the aeration piping to the soil surface. Channeling of water was observed in the soils immediately above the water distribution manifold, possibly causing preferential paths in the flow of nutrients and oxygen through small areas rather than through the entire soil. Channeling would slow the overall rate of remediation. Lastly, it may be necessary to install a heavier liner or to provide better protection by installing a cushion fabric or sand.

Bioremediation of Hydrocarbon-Contaminated Soils and Groundwater in Northern Climates

CHARLES M. REYNOLDS, W. ALAN BRALEY, MICHAEL D. TRAVIS,
LAWRENCE B. PERRY, AND ISKANDAR K. ISKANDAR

INTRODUCTION

Background

Many contaminated-soil sites in cold regions are isolated and remote. These factors, combined with extreme climatic conditions, make bioremediation difficult. Although there are increasing choices of in-vessel bioremediation schemes available, these often rely on extensive equipment needs and large energy inputs. For use at remote sites in cold regions, a cost-efficient and applicable technology would necessarily be characterized by low input and rugged design. Bioremediation encourages natural soil-mediated processes by addressing the limiting factors. It may be a preferred technology for remediating contaminated soils in severe climates, such as the Arctic and sub-Arctic regions of Alaska or other cold regions, and potentially could be used to treat the bulk of the contaminated soils at these remote sites. Although bioremediation of contaminated soils is a proven and frequently used technology in more temperate regions, the constraints imposed by severely cold climates, where the season for optimum bioremediation conditions typically is short, may reduce the cost benefits.

Objectives and rationale for field research

To optimize bioremediation, it is necessary to identify and reduce the factors that limit biodegradation rates. Ways to reduce these limitations are usually found through small-scale laboratory treatability tests, but the success of transferring laboratory results to the field, our ultimate goal, is difficult to quantify. Obtaining a good understanding of the degradation rates at a field site is hindered by the inherent variability in field biological studies.

Landfarms are readily constructed and provide relatively easy sampling, although the soil mixing that is achievable is usually not uniform across an entire landfarm. Regulatory restrictions generally prevent intentional application of petroleum to soils and thereby inhibit studying the effects of different treatments applied to a "uniformly" contaminated soil. To counter this, random samples can be taken and composited, but unless this process is replicated sufficiently, estimates of variability, and therefore estimates of the net effects of treatments taken from the laboratory, can not be made successfully.

We have incorporated the spatial variability into the monitoring scheme in the landfarm. Process monitoring is more difficult in subsurface systems, owing to the costs of obtaining samples and the limited access to the soil treatment zone. For the infiltration gallery's subsurface system, we used traditional well monitoring techniques. The recirculating leach bed design provided a more aggressive treatment than the infiltration gallery, was a contained system, and provided for better mixing than the infiltration gallery or landfarm.

Project location

The project site, located at the Fairbanks International Airport (FIA) in Fairbanks, Alaska, was the previously used crash-fire-rescue (CFR) train-

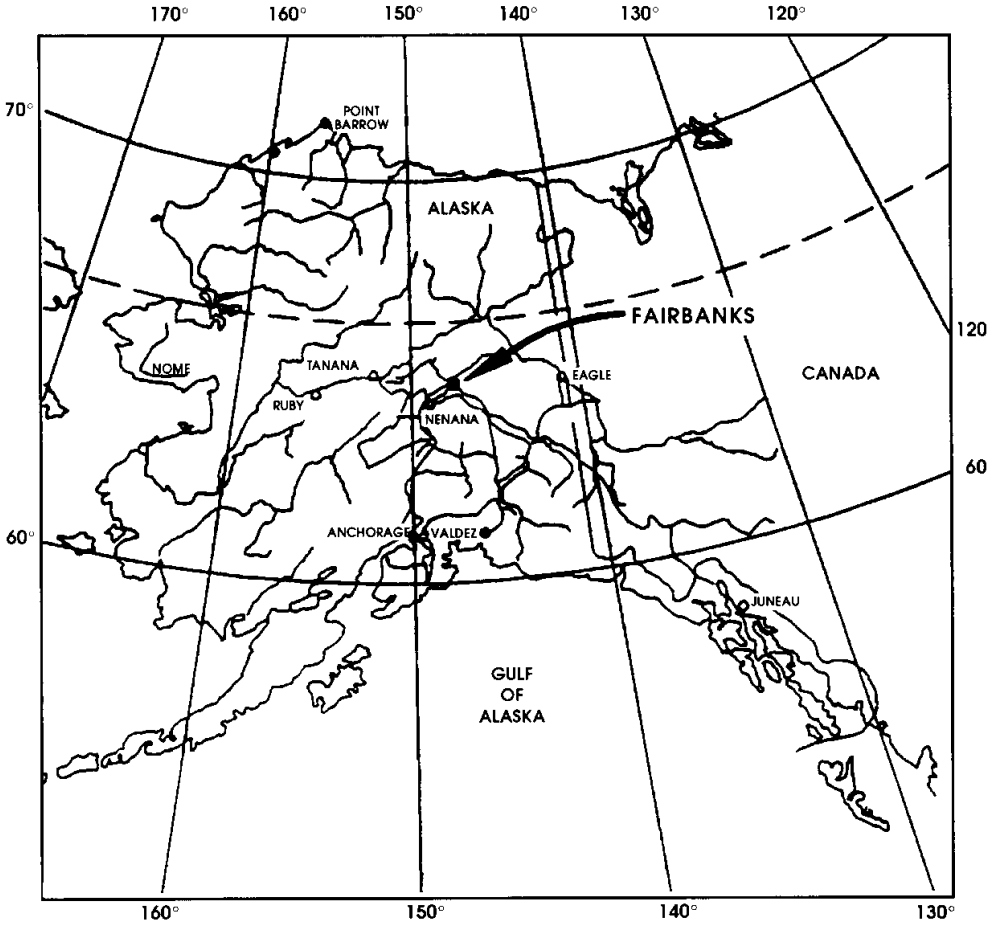

a. Fairbanks, Alaska.

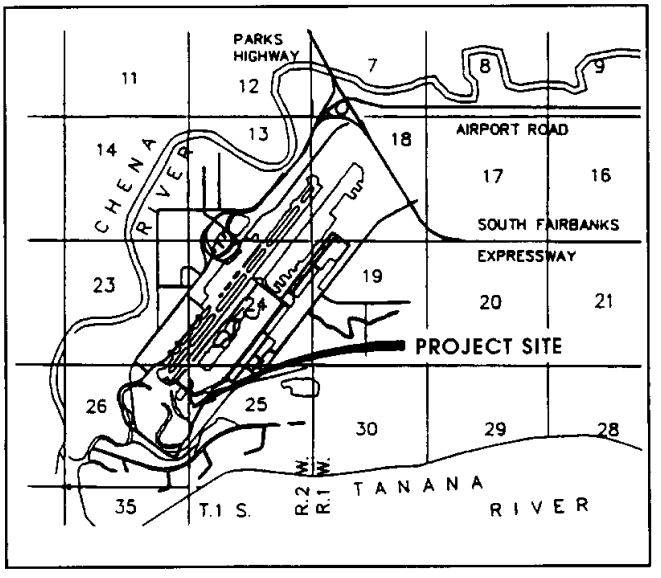

b. Overview of Fairbanks International Airport and CPAR bioremediation project site.

Figure 1. Project location.

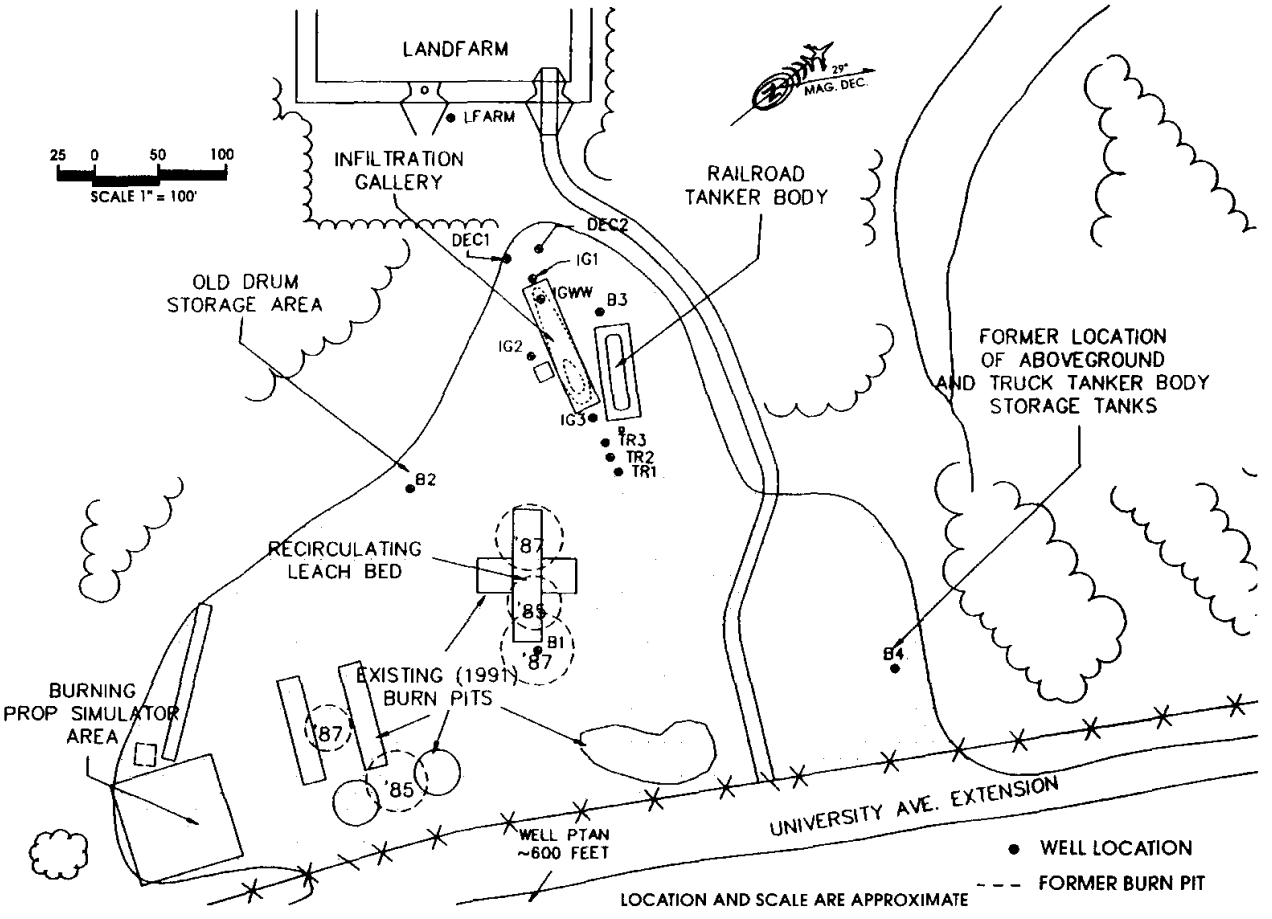

c. Fairbanks International Airport CFR training site.

Figure 1 (cont'd).

ing facility. Specifics have been previously documented (Walker and Travis 1990, Braley 1991, Braley 1993, Reynolds 1993, Reynolds et al. 1994). Figure 1 shows the locations of Fairbanks, FIA, and the site of the CFR training facility. FIA is located 3.5 miles (5.6 km) southwest of Fairbanks, Alaska, at latitude 64°49'N. The mean annual air temperature is 26°F (–3.3°C). The mean annual precipitation at FIA is 11.2 in. (28.5 cm), of which approximately half is snowfall that persists on the ground for 5 to 7 months of the year. The site is bounded by the Chena River, Tanana River, and drainage sloughs.

Site history

The CFR facility was used for many years to train personnel from FIA, government agencies, and private firms in fire fighting and rescue techniques appropriate for aircraft disaster. Shallow, unlined burn pits were constructed on the gravel pad and flooded with water and a layer of fuel oil, which was then ignited to serve as a demonstration fire. Following training, fuel remaining in the pits was reignited and permitted to burn. This process allowed unburned fuel to contaminate the soil and groundwater aquifer. Additionally, training included extinguishing burning-prop simulations, which are several fuel nozzles spraying ignited oil above the ground.

Above-ground fuel storage tanks, two truck-tanker bodies, and 55-gal. (208-L) drums, which contained paint and asphalt products, also were located at the site. The two tanker bodies and approximately 500 gal. (1900 L) of fuel that leaked from one of the tanker bodies was removed from the site during 1990. An 18,000-gal. (68,130-L) railroad tanker body, located at the site within a gravel-berm containment dike, released between 6000 and 10,000 gal. (23,000 and 38,000 L) of fuel during May or June 1990 (Fig. 1c).

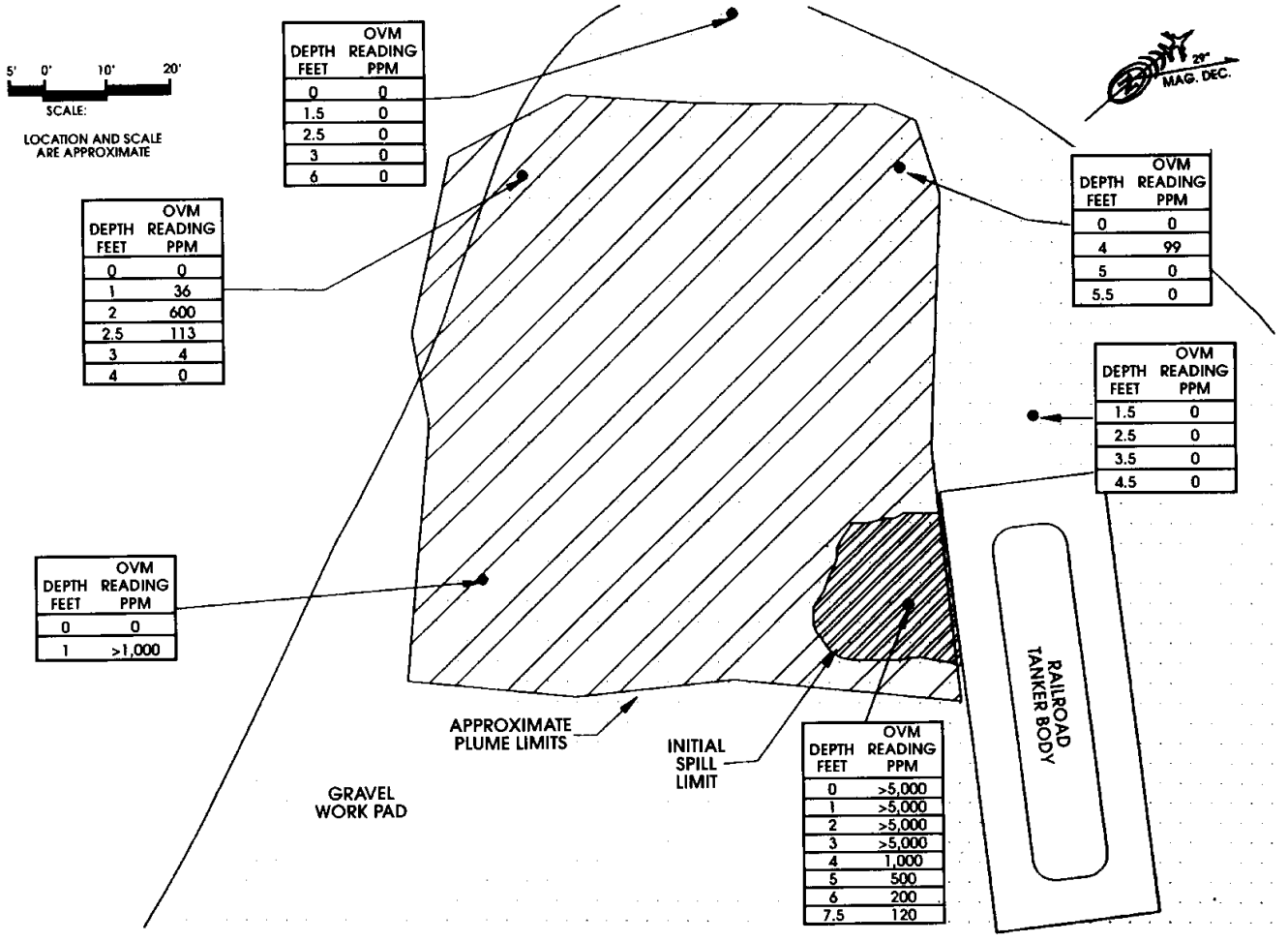

Figure 2. Zone of contaminated soil following tanker spill (OVM is organic vapor meter; 1 ft = 0.3048 m).

Site investigations

Organic vapors in the soils at various depths were analyzed using a hand-held photo-ionization meter to delineate the plume that resulted from the railroad tank car release (Fig. 2). The primary spill covered an area approximately 25 ft (8 m) in diameter and 7.5 ft (2 m) deep. Soils at the groundwater level were contaminated and groundwater was affected by the spill. The fuel oil migrated along the surface of a silt layer located beneath the 2- to 3-ft-thick (0.5- to 1-m-thick) gravel work pad covering the area, resulting in a secondary plume.

During the summer of 1989, a preliminary site investigation (Shannon and Wilson, Inc. 1989) indicated that hydrocarbon contamination was present at the old and new burn pit areas, near the truck tanker body, at the burning prop simulator area, near the railroad tanker body, and at the old drum storage areas (Fig. 1c). The highest concentrations were found in the old and new burn pit areas and at the site of the truck tanker body. Benzene detected in the groundwater was below federal maximum contaminant levels (MCL), and hydrocarbon contamination was primarily confined to the surface soils.

Subsoil and groundwater characteristics

The area that had been used for the fire training activities was generally underlain by gravel that was 2 to 3 ft (0.5 to 1 m) thick. Other portions of the area were underlain by silt, sandy silt, sand, and silty sand. Soil borings and excavations at some locations indicated lenses of sandy gravel. The water table fluctuates 5 to 7 ft (1.5 to 2 m), depending on the stages of the Tanana and Chena Rivers, and has been measured as high as 2 to 3 ft (0.5 to 1 m) from the surface at some locations within the site. July 1989 measurements showed a gradient of approximately 0.25 m per 1000 m toward the northwest (Shannon and Wil-

son, Inc. 1989). These findings generally agreed with those obtained at a site located approximately 0.5 miles (0.8 km) to the northwest of the CFR area (Dames and Moore 1992), where monitoring over 12 months indicated a gradient of 1.1 to 4.2 ft/mile (0.2 to 0.8 m/km) to the west–northwest.

Four groundwater monitoring wells, denoted B1–B4, were installed at the site in 1989, and during 1991, an additional five monitoring wells, denoted IG1–IG3 and DEC1 and DEC2, were installed in conjunction with the construction of the infiltration gallery. In 1992 three wells, denoted TR1 through TR3, were placed with individual sampling tubes at 1-ft (30-cm) intervals along the length of the well casing. An additional well, PTAN, was installed approximately 750 ft (229 m) up-gradient of the site. During summer 1991, two groundwater pumping wells, IGWW and LFARM, were installed at the site in conjunction with construction of the remediation facilities (Fig. 1c).

FIELD REMEDIATION PROCEDURES

The treatment technologies used at the site were two ex-situ methods, landfarming and a recirculating leach bed, and an in-situ method, an infiltration gallery, for saturated soils. The design of these systems was completed in early 1991 and a construction contract was awarded in April 1991 (Anonymous 1991). Construction started in late April 1991, but exceptionally high groundwater resulting from heavy snowfalls during the winter of 1990–91 delayed completion. Because of the construction delay, the facilities began to operate during the first two weeks of August 1991.

Landfarm

Design

The landfarm is a lined, bermed area that is 190 by 230 ft (58 by 70 m). The liner is 60-mil (1.524-mm-thick) high-density polyethylene (HDPE) and is protected at the top and bottom by 12-oz (4.07-g/m^2) fabric. A 1-ft (30-cm) layer of filter rock covers the liner to aid drainage. To prevent clogging, the filter rock is separated from the overlying contaminated soils by nonwoven geotextile separation fabric (Fig. 3). A system was installed inside the liner to collect and recirculate leachate. Berms are sufficiently high to contain projected annual precipitation. Leachate recirculation is routed through a mixing tank for nutrient additions and then through spray irrigation lines on the surface of the landfarm site. The

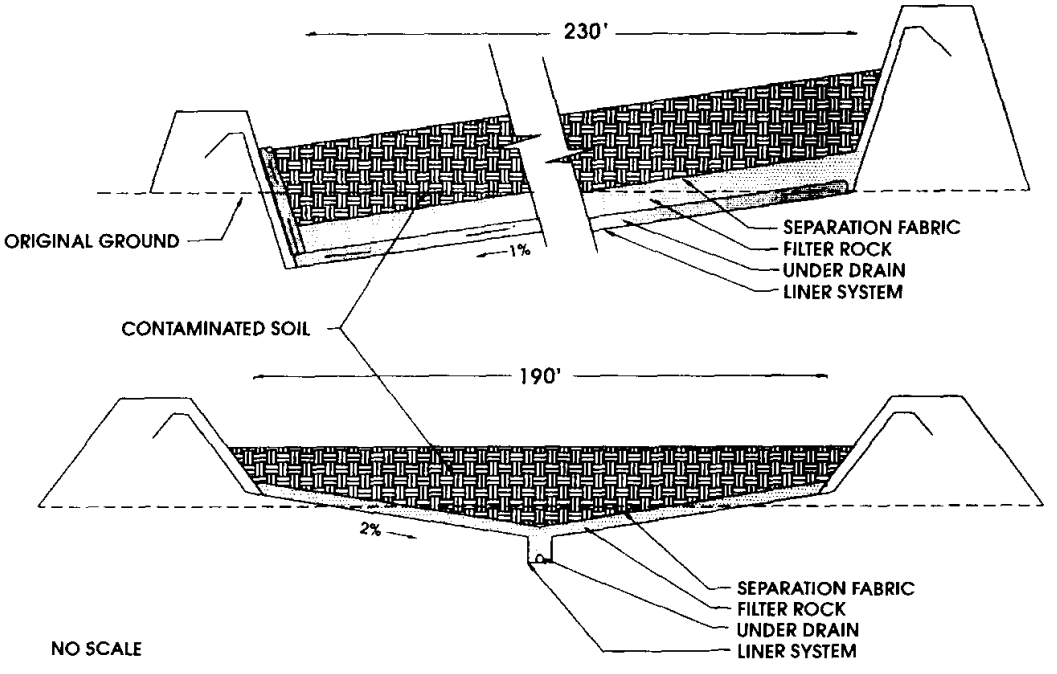

a. Construction specifications.

Figure 3. Landfarm (1 ft = 0.3048 m).

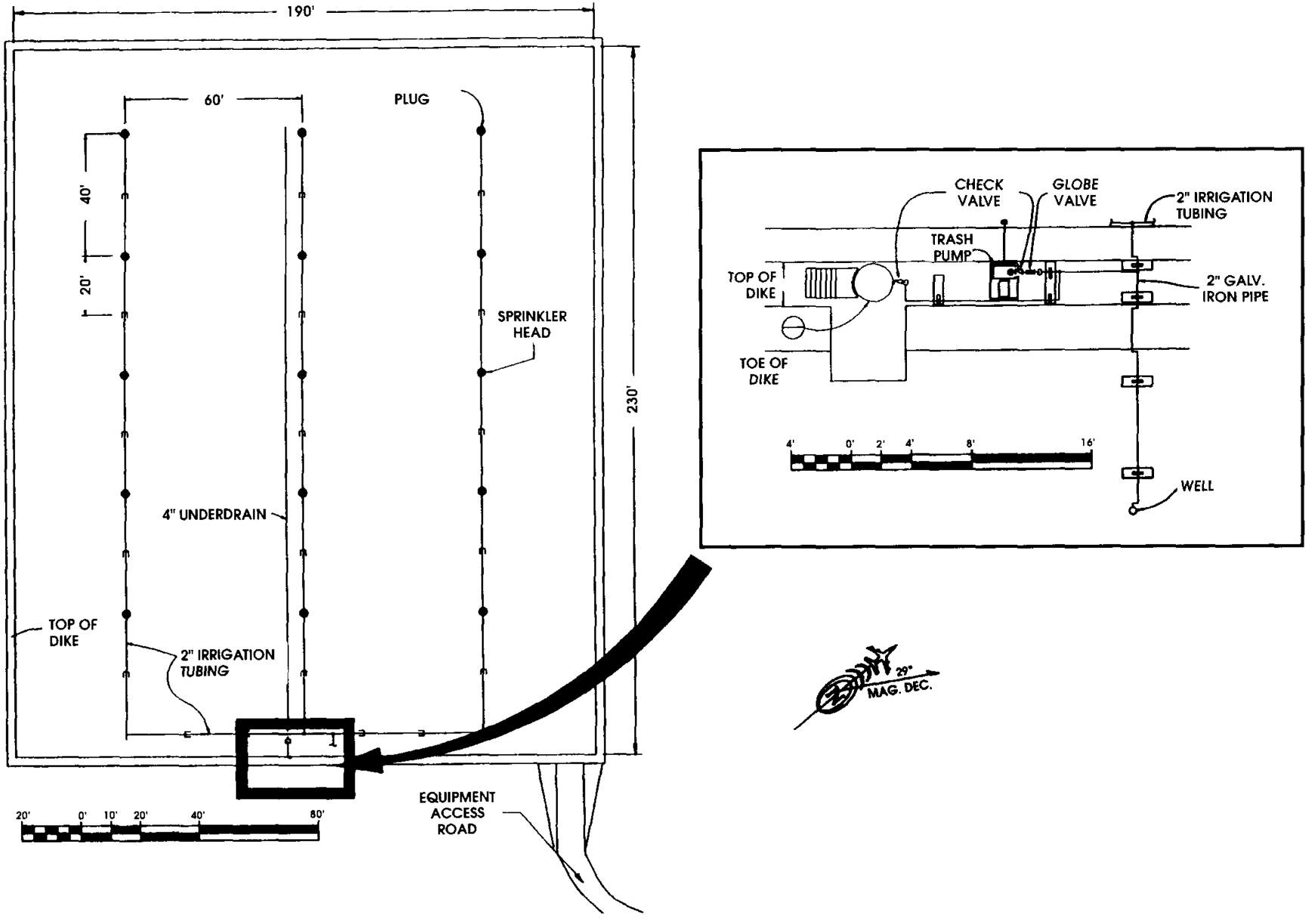

b. Irrigation system.

Figure 3 (cont'd). Landfarm (1 ft = 0.3048 m, 1 in. = 2.54 cm).

soil surface under the liner is sloped to ensure that the liner directs leachate into the collection system (Fig. 3a).

Construction

After vegetation was cleared from the landfarm site, the native sandy-silt material was excavated to attain the design contours at the bottom of the landfarm. Excavated material was used to form the surrounding dike. The lowest point in the structure was approximately 2.5 ft (0.76 m) below the original surface of the mineral soils, and the soils in the lower portions of the structure were saturated by groundwater. Construction of the facility was delayed to allow the groundwater elevation to recede.

After the groundwater level receded, the native soils were compacted, a separation fabric was placed atop the sandy-silt in the lower half of the excavation, a 1-ft (30-cm) lift of embankment material was placed over the bottom of the entire excavation, and the berm height was also increased. A layer of 12-oz (4.07-g/m^2) cushion fabric was placed before HDPE liner sections were positioned parallel to the 230-ft (70-m) axis of the landfarm, with seams overlapping 5–6 in. (13–15 cm). Heat-welds were made along the seams and weld integrity was tested. Following weld testing, a cushion fabric was placed over the HDPE liner and a 1-ft (30-cm) layer of filter rock covered with a layer of nonwoven separation fabric was added.

The leachate recovery system was a 4-in. (10-cm) perforated PVC pipe placed in the trench at the center of the landfarm parallel to the 230-ft (70-m) axis. A riser at the lower end of the landfarm was used for pumping water from the leachate system. The riser was connected by a 1-hp (10-kg cal/min) trash pump to a fertilizer mix tank installed on a 2-ft-high (61-cm-high) platform. A 30-ft (9-m) irrigation well for adding supplemental water to the landfarm and a surface irrigation system were installed. Surface irrigation was through 2-in. (5-cm) aluminum pipes and rotating sprinkler heads. The nutrient mixture was gravity fed to the irrigation piping. Water could be delivered to the irrigation system from the well, fertilizer tank, or the drain system (Fig. 3b).

Soil treatment

Approximately 500 yd^3 (382 m^3) of soil, previously stockpiled during cleanup of the fuel spill next to the railroad tanker body, and approximately 3200 yd^3 (2500 m^3) of soil excavated and transported from the old burn pit area were moved into the landfarm. The extent of this excavation in the burn pit area is shown in Figure 4. The contaminated soil was disked weekly with a 2-ft-diam. (60-cm-diam.) disk for aeration and nutrient mixing. The disk mixed the upper 8 to 12 in. (20 to 30 cm) of soil. Each week, 25 lb (11.35 kg) of ammonium nitrate (NH_4NO_3) and 2 lb (0.908 kg) of potassium (potassium sulfate) were mixed with 150 gal. (568 L) of water and allowed to flow into the irrigation piping. The well pump was activated to disperse the fertilizer mixture over the landfarm area. Irrigation water was added to the landfarm several times during August to keep the soil's moisture content at 25–85% of field capacity.

The 1992 operational season began in mid-April; a wheeled loader and a large snowblower were used to remove approximately 80 in. (2 m) of snow from the landfarm. An additional 15 in. (38 cm) of snow fell after the winter accumulation was removed. Meltwater, coupled with the moisture from rainfall in late August and September 1991, saturated the material in the landfarm and delayed tillage until 23 June. The rate of fertilizer application was increased to 600 lb (272 kg) of ammonium nitrate, 150 lb (68 kg) of triple super-phosphate, and 50 lb (23 kg) of potassium each month. Applying fertilizer through the irrigation system during 1991 resulted in uneven coverage because of leaky joints in the irrigation pipe, so dry fertilizer was applied in 1992. A tractor-mounted broadcast spreader was used, followed by tillage.

Process monitoring

Landfarming is one of the most commonly used and accepted soil biotreatment techniques in temperate regions (Kuroda and Nusz 1994), yet information on landfarming that would expedite its application to cold regions was sparse. For these reasons, we emphasized characterization of the landfarm and the governing processes within it.

Microbial activity. We characterized the microbial activity at the landfarm by four methods. A most probable number (MPN) sheen screen technique was used to enumerate the oil-degrading population. Radio-respirometry was used to determine the potential to mineralize specific hydrocarbons. Nonspecific microbial activity in the field was estimated by measuring evolved carbon dioxide (CO_2). This was done by alkali-trapping and both gravimetric and gas chromato-

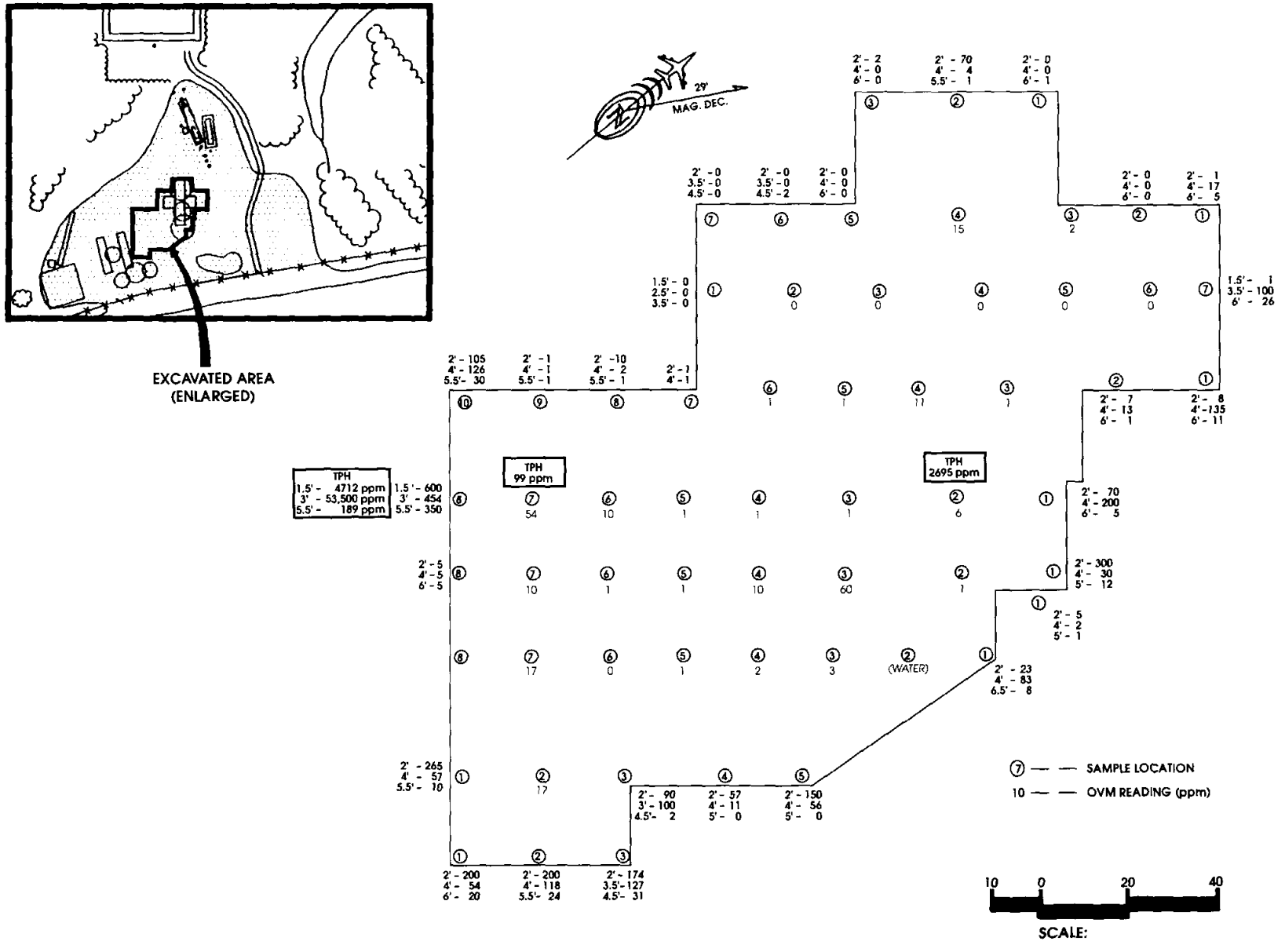

Figure 4. Areas of soil excavation for landfarm treatment (TPH is total petroleum hydrocarbon levels and OVM is organic vapor meter) (1 ft = 0.3048 m).

gram analysis. In August 1991, five composite soil samples were collected at six times and analyzed using radio-respirometric assays and sheen screen techniques. Field measurements of CO_2 evolution were made on seven different occasions.

Contaminant degradation rates. Contaminant degradation was also estimated by measuring dichromate-oxidizable organic carbon and gravimetric total petroleum hydrocarbon (TPH) levels. At approximately monthly sampling intervals, 25 composite samples were collected in a grid pattern and analyzed. Laboratory results were then examined using geostatistical methods. Soil extract hydrocarbon analyses were also performed by an independent testing laboratory on soil samples collected by FIA personnel. During 1991, samples were analyzed for TPH by an infrared method. Soil samples collected during 1992 were analyzed for diesel range petroleum hydrocarbons (DRPH), gasoline range petroleum hydrocarbons (GRPH), and benzene, toluene, ethylbenzene, and xylene (BTEX).

Organic vapor emissions. Headspace gas concentrations were measured for samples collected on 18 August 1992, using an organic vapor meter (OVM) calibrated for benzene. On 20 August 1992, samples were collected for laboratory analysis of DRPH concentrations. No detectable DRPHs were measured in these samples (Table 1). These results indicated that material in the landfarm reached appropriate cleanup levels for closure sampling and disposal.

Table 1. Landfarm analytical results.

Date	TPH (mg/kg)	GRPH (mg/kg)	DRPH (mg/kg)	B (mg/kg)	T (mg/kg)	E (mg/kg)	X (mg/kg)
			Location 12				
21 Aug 91	1100						
28 Aug 91	1700						
18 Sep 91	770						
01 Oct 91	1100						
15 Jul 92		29*	2300	0.06	0.15	<DL	0.29
20 Aug 92			<DL*				
			Location 14				
21 Aug 91	4000						
28 Aug 91	3500						
18 Sep 91	1000						
01 Oct 91	900						
15 Jul 92		7†	55	0.02	0.07	0.03	0.08
20 Aug 92			<DL				
			Location 7				
20 Aug 92			<DL				
			Location 16				
20 Aug 92			<DL				

* Below detection limits.
† Light deisel.

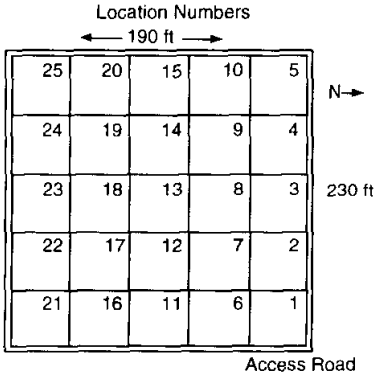

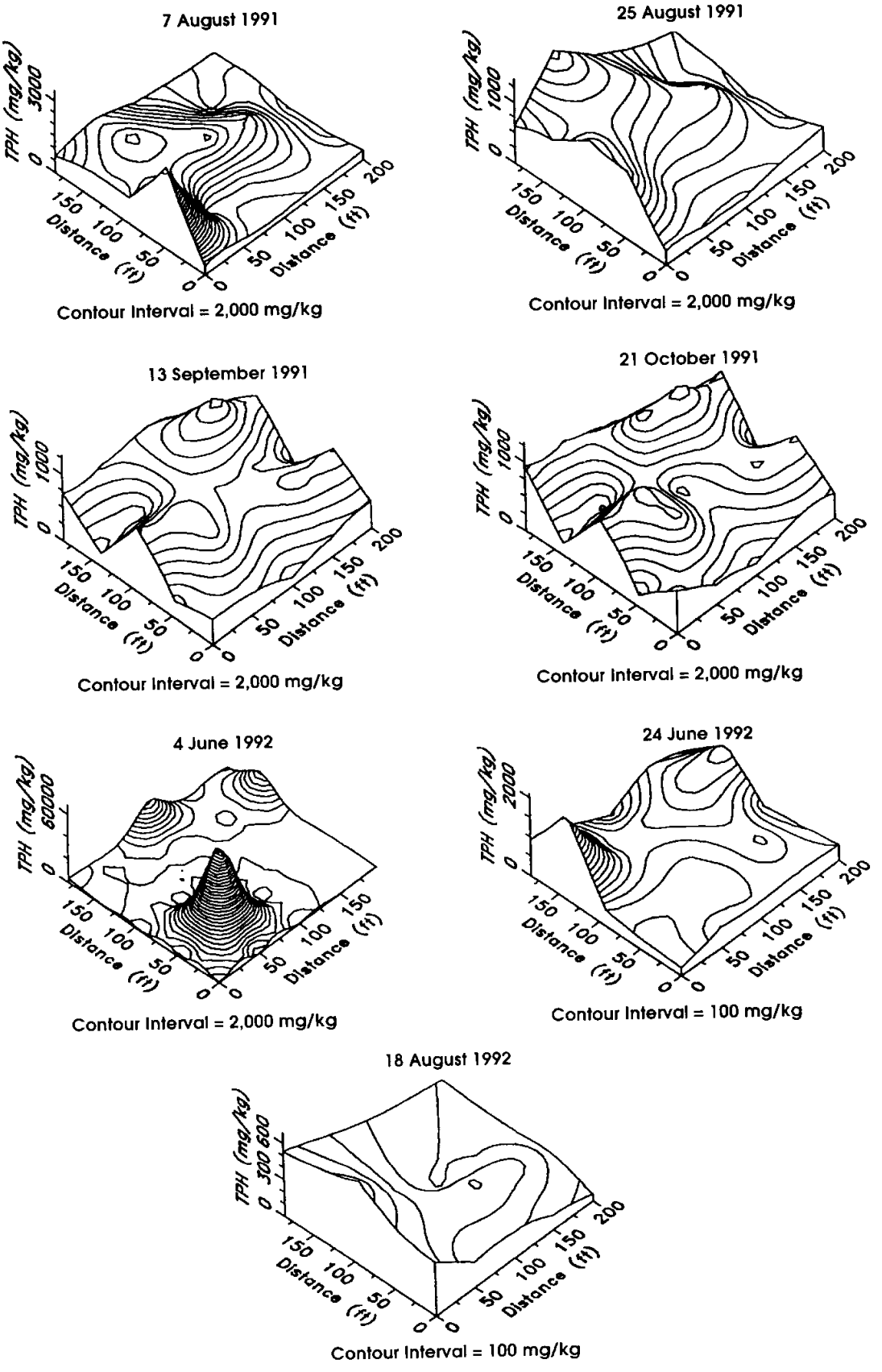

Figure 5. Soil TPH levels.

Treatment results

Microbial activity. First year data from the University of Alaska cooperators in this study revealed no increase in mineralization potentials or microbial numbers attributable to the addition of nitrogen, irrigation, or tilling (Rawls-McAfee and Brown 1992). In 1992, 180 soil samples were collected for radio-respirometric assays (Brown et al. 1991) and sheen screen analysis. The results indicated an increase in the mineralization potentials and numbers of microorganism, which is consistent with biodegradation.

Contaminant levels. Soil carbon levels showed a decline in organic carbon and the TPH levels through 1991 and 1992 (Fig. 5). To address the spatial variability issue, CRREL researchers estimated biodegradation rates from a 25-point grid on a 1-acre (4047-m^3) landfarm. A variety of analytical means were used. The simplest and least costly method, using dichromate oxidizable carbon, yielded estimated degradation rates that varied substantially throughout the site.

Three critical observations were noted. First, the degradation of organic carbon was readily measured, even though with a relatively crude technique such as dichromate oxidizable carbon. Second, the measured degradation rates, expressed as half-lives, varied by seven-fold within a 1-acre (4047-m^3) site. Third, there was a pattern in the variability; the center of the site had a much shorter half-life. Sampling locations and results for paired soil hydrocarbon analyses are shown in Table 1. These tests indicated a decline in soil hydrocarbon concentrations through the two seasons.

Organic vapor emissions. These results are shown in Table 2. Organic vapors were detected at low concentrations in 4 of the 25 samples analyzed. Additional soil organic vapor analysis typically resulted in low levels.

Infiltration gallery

The infiltration gallery is a dynamic in-situ treatment system designed to stimulate hydrocarbon degrading bacteria by circulating nutrient and oxygen-amended water through petroleum-contaminated soil. The infiltration gallery was installed in the area of the fuel spill next to the railroad tanker body. The soil excavated from this area was moved into the landfarm for treatment, and the infiltration gallery was used to treat the surrounding soil that was less intensively contaminated. The infiltration gallery has a groundwater pumping well located downgradient from the location of the spill. Nutrients are added to water pumped from the well. The water is then infiltrated from a 20- by 100-ft (6- by 30-m) gallery through petroleum-contaminated soils. Oxygen is added to the water within the infiltration gallery by aeration.

Table 2. Results of organic vapor meter survey for the landfarm, 18 August 1992.

Loc.	Conc. (ppm)	Loc.	Conc. (ppm)	Loc.	Conc. (ppm)	Loc.	Conc. (ppm)	Loc.	Conc. (ppm)
1	0	6	1	11	5	16	0	21	0
2	0	7	20	12	0	17	0	22	0
3	0	8	0	13	0	18	0	23	0
4	0	9	0	14	0	19	0	24	0
5	0	10	0	15	0	20	0	25	0

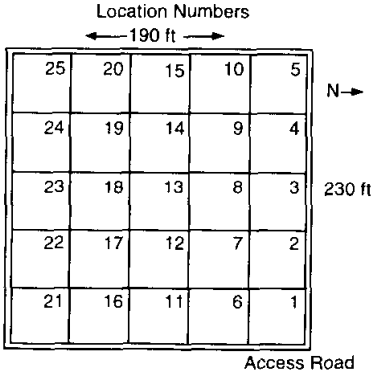

Design

Design views of the infiltration gallery, pumping well, and piping systems are shown in Figure 6. To promote infiltration of water through the sides and bottom of the gallery, it is filled with 2–5 in. (5–13 cm) cobbles and a low percentage of finer materials. The pumping well is designed to draw water from a depth of 15–20 ft (5–6 m) below the original ground surface and to produce 35–45 gal/min (133–170 L/min) of flow. This water is distributed in the infiltration gallery through the system of 4-in. (10-cm) perforated pipes located 1 ft (30 cm) below the surface of the infiltration rock. Nutrients are mixed in a 500-gal. (1893-L) tank located in the equipment shed next to the gallery. The nutrient solution is injected into the pumped water stream prior to infiltration using a chemical feed pump. Oxygen is added to the water in the infiltration gallery by 4-in. (10-cm) perforated pipe located near the bottom of the gallery. Air is supplied to the aeration piping by two 10-hp (100-kg cal/min) blowers.

Construction

The gallery was constructed by excavating an area 25 by 100 ft, 6–7 ft deep (7.5 by 30 m, about 2 m deep). High groundwater was encountered during excavation, limiting the depth of excavation. Material removed during the excavation was suspected of having been contaminated by the prior fuel spill and was placed directly into the landfarm. Following excavation, approximately 1 ft (30 cm) of the 2–5 in. (5–13 cm) infiltration rock was placed on the bottom of the gallery. The aeration manifold was then positioned and infiltration rock added to 1 ft (30 cm) below the final grade of the structure. The water distribution piping was then placed and infiltration rock added to achieve the final design grade. A 1-ft (30-cm) berm was placed around the gallery to prevent surface runoff from carrying fines into the infiltration rock. When the gallery was completed, the pumping well was installed and the equipment shelter housing the fertilizer mix tank, blowers, and electrical distribution panel was installed on site.

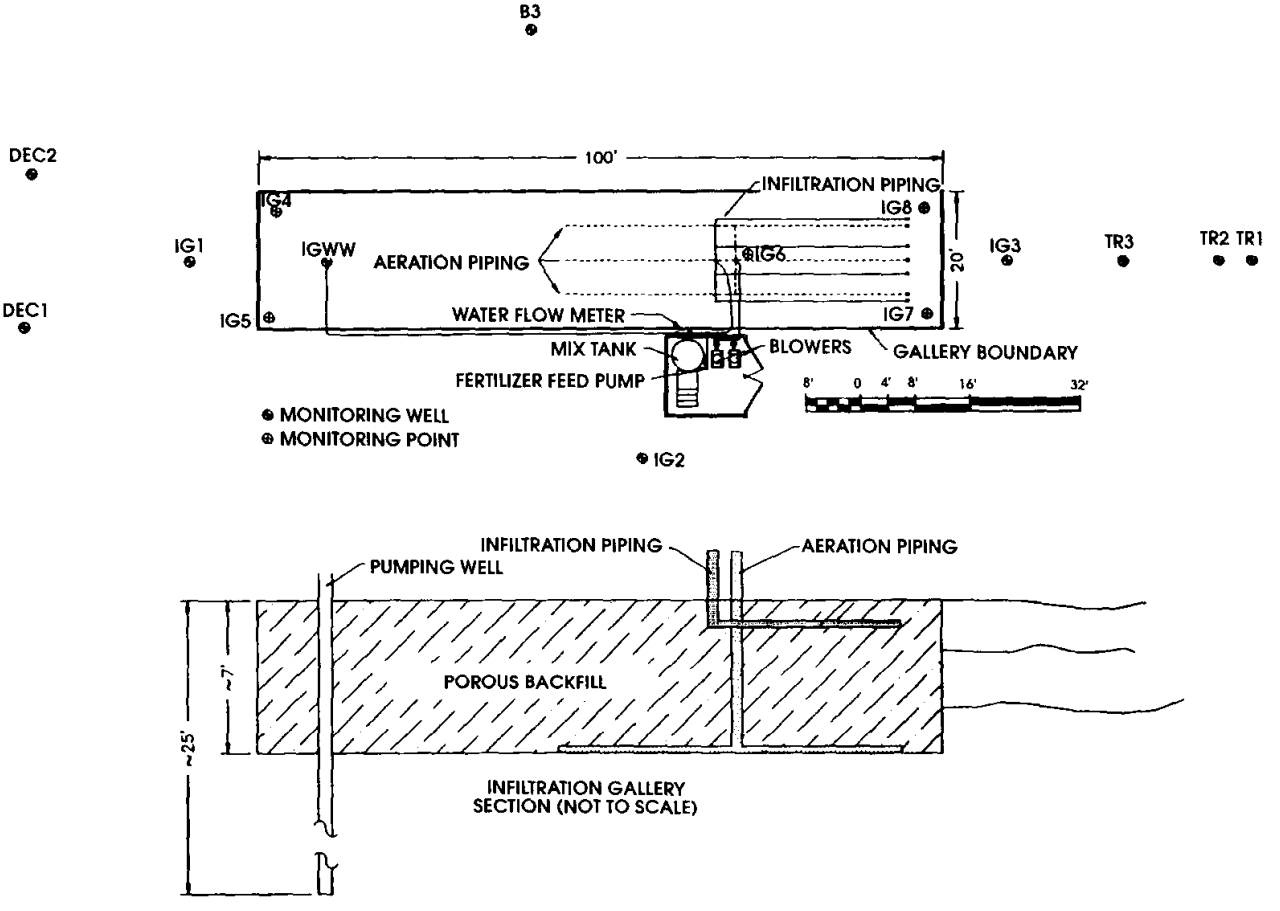

Figure 6. Infiltration gallery and monitoring wells (1 ft = 0.3048 m).

Table 3. Infiltration gallery discharge monitoring.

Date	Benzene (µg/L) 1 Dec	Benzene (µg/L) 2 Dec	BTEX (µg/L) 1 Dec	BTEX (µg/L) 2 Dec	NO_3 (mg/L) 1 Dec	NO_3 (mg/L) 2 Dec
			a. 1991			
10 Aug	1.0	0.9	1.0	0.9	<DL*	1.38
23 Aug	—	—	—	—	—	—
26 Aug	—	—	—	—	0.05	0.28
03 Sep	<DL	<DL	<DL	<DL	0.43	0.45
10 Sep	—	—	—	—	2.10	4.10
17 Sep	<DL	<DL	<DL	<DL	3.83	7.08
23 Sep	—	—	—	—	7.30	7.85
01 Oct	<DL	<DL	<DL	<DL	2.10	6.78
04 Oct	—	—	—	—	—	—
07 Oct	—	—	—	—	0.80	6.50
			b. 1992			
19 Jun	<DL	<DL	<DL	<DL	0.7	1.1
26 Jun	—	—	—	—	—	—
01 Jul	—	—	—	—	1.7	1.8
06 Jul	—	—	—	—	—	—
09 Jul	0.2	<DL	0.6	<DL	8.6	6.9
16 Jul	—	—	—	—	6.5	5.1
17 Jul	—	—	—	—	—	—
23 Jul	<DL	<DL	<DL	<DL	2.8	2.8
30 Jul	—	—	—	—	0.7	0.7
06 Aug	<DL	<DL	<DL	<DL	2.8	1.2
06 Aug	—	—	—	—	—	—
13 Aug	—	—	—	—	5.38	5.59
18 Aug	—	—	—	—	—	—
20 Aug	<DL	<DL	<DL	<DL	<DL	6.6
24 Aug	—	—	—	—	—	—
28 Aug	—	—	—	—	4.2	3.5
03 Sep	<DL	<DL	<DL	<DL	0.5	0.8
11 Sep	—	—	—	—	<DL	0.6
16 Sep	<DL	<DL	<DL	<DL	0.55	0.8
01 Oct	—	—	—	—	<DL	<DL

* Below detection limits.

Operation

The infiltration gallery operation consists of pumping groundwater at a rate of approximately 40 gal/min (151 L/min) from the pumping well and infiltrating the water through petroleum-contaminated soils surrounding the gallery. A fertilizer solution is prepared in the mix tank, such that when it is injected into the stream of water to be infiltrated, the final concentration of nitrogen is 40 ppm (mg/kg). The N:P:K ratio used in the nutrient solution is 10:1:1.

On 23 August 1991, the system was activated and operated continuously until 7 October. Phosphate fertilizer was not added during 1991. The system was also operated from 23 June through 1 October 1992. During this time, the concentration of ammonium nitrate input was reduced several times because of high concentrations of NO_3 measured in the monitoring wells. Problems were also encountered when the nutrient feed pump clogged several times.

Monitoring

Parameters monitored at the infiltration gallery included soil and groundwater temperatures to a depth of 20 ft (6.1 m), nutrient feed rate and concentrations, pumping well flow rate, and groundwater elevation in and outside the gallery. Groundwater chemistry monitoring included concentrations of Cl, NO_3, PO_4, SO_4, Ca, Mg, Na, K, Fe, Br, F, Pb, O_2, nitrate, TPH, and aromatic hydrocarbons for samples extracted from the six monitoring wells surrounding the gallery and the pumping well. The numbers of hydrocarbon degrading microorganisms and microbial mineralization potential for groundwater samples extracted from several of the infiltration gallery monitoring wells were also measured during both operating seasons. The locations of the wells and points used to monitor the infiltration gallery operation are shown in Figure 6.

Frequent monitoring of benzene, BTEX, and nitrate in the groundwater at monitoring wells DEC1 and DEC2 was required for compliance with the State Waste Treatment/Disposal Permit necessary to operate the infiltration gallery. Table 3 shows the results of this monitoring for 1991 and 1992. If nitrate concentrations exceeded 5 ppm (mg/kg), the permit required action be taken to reduce the concentration; if concentrations exceeded 10 ppm (mg/kg) (federal MCL), the permit required that the system be shut off. The concentration of nitrate was found to rise quickly at the monitoring wells, reaching action levels within 2–3 weeks of startup. The measured concentrations never exceeded 10 ppm (mg/kg). Benzene and BTEX were detected only once in these wells after initial startup in 1991. These measured levels of BTEX were substantially below the federal MCL.

Before the system began operating in 1991, benzene was detected at concentrations of less than 1 ppb (µg/kg) in the monitoring wells sampled. After the system had operated for 10 days, benzene and BTEX were no longer detected in the monitoring wells. After 3 days of operation, benzene levels in the pumping well were measured at 12 ppb (µg/kg). This well was not sampled before startup. The levels of benzene in the pumping well remained near 10 ppb (µg/kg) throughout the 1991 operating season. Benzene

and BTEX not being detected in the infiltration gallery monitoring wells during operation tells us that aromatic hydrocarbons were being removed by the infiltration gallery or by microbial degradation.

Before the operation began in 1992, benzene and BTEX levels were found at concentrations similar to those measured prior to operation in 1991(1 ppb [µg/kg]) in the monitoring wells surrounding the gallery. Benzene was not detected and 1.8 ppb (µg/kg) BTEX was detected in the pumping well before operation in 1992. Similar to the 1991 season, benzene and BTEX were generally below detectable limits in the six monitoring wells surrounding the infiltration gallery during the nearly 100 days of operation in 1992. Benzene was detected at less than 2 ppb (µg/kg) and BTEX levels were less than 5 ppb (µg/kg) for water extracted from the pumping well during 1992, which is significantly lower than the 1991 levels.

The size of the microbial population before startup of the infiltration gallery in 1991 was higher (counts of hydrocarbon-degrading microorganisms in groundwater samples collected next to the infiltration gallery) than in samples from other monitoring wells on and off the site. A similar trend was observed in the mineralization potentials. After startup, our estimates of microbial population numbers and mineralization potential declined significantly at the monitoring wells near the infiltration gallery.

The observed rapid transport of nitrate away from the gallery and the decline of microbial population and activity levels showed us that the water being pumped from deeper in the aquifer flows across the surface of the groundwater table some distance from the gallery. As a result, the microbial population possibly was being moved from the site faster than it could regenerate. To quantify the hydrological influence of the infiltration gallery in terms of flow rates, radius of influence, and dilution factors, groundwater tracer studies were developed for the 1992 operating season.

Two groundwater tracer studies, conducted in conjunction with the infiltration gallery, determined the flow pattern and flow rate of the nutrient-enriched water as it moved away from the infiltration gallery and was drawn towards the groundwater pumping well. The primary tracer study introduced sodium bromide into the stream of water flowing to the infiltration gallery, beginning on 21 July 1992. The concentration of sodium bromide at the point of mixing was 4 ppm (mg/kg). Injection was stopped on 1 August 1992. Frequent monitoring of the bromide concentrations in 15 wells and monitoring points surrounding the gallery continued until 13 August 1992.

The second tracer study introduced 1000 L of a 330 ppm (mg/kg) solution of water and sodium fluoride into an injection well that was hydrologically up-gradient of the infiltration gallery. The tracer was injected during a 1-hour, 39-minute period on 8 July 1992. Fluoride concentration was monitored in wells next to the point of injection for several weeks after.

Groundwater sampling

The wells mentioned in the previous paragraph were constructed with PVC pipe. The B, IG, DEC, and TR series wells were constructed with flush-threaded PVC pipe. The screened interval of the wells consists of machine-cut slots in the PVC pipe, with silica sand used as the outside packing. The upper portion of the TR series wells is cased in a 1-ft-diam. (30-cm) pipe that extends above the ground surface, terminating in a lockable sampling shelter. The B, IG, and DEC series wells are sealed with bentonite pellets, and capped at the surface with a cement–bentonite slurry seal. Construction details of the PTAN well are not readily available. We assumed the construction of this well to be similar to that of the IG series wells.

Results

During July 1989, Shannon and Wilson sampled the B series wells for purgeable aromatics and purgeable halogens. From fall 1990 to the present, personnel from the Department of Natural Resources (DNR), Division of Water, sampled groundwater at the site. Initially, only wells PTAN, B1, B2, and B4 were sampled. Well B3 was added during spring 1991. Monitoring at the IG and DEC series wells commenced during August 1991 in conjunction with the startup of the infiltration gallery.

Samples collected by DNR were analyzed by the Alaska Division of Water, Water Quality Laboratory in Fairbanks, Alaska, and by Northern Testing Laboratories (NTL), also located in Fairbanks. Parameters measured by DNR included field measurements of conductivity, dissolved oxygen, temperature, and pH. Analyses by the Water Quality Laboratory include the concentrations of Cl, NO_3, PO_4, SO_4, Ca, Mg, Na, K,

Fe, Br, F, Pb, alkalinity, and TPH. Aromatic hydrocarbons and nitrate analyses, which were required for compliance with the water discharge permit needed to operate of the infiltration gallery, were conducted by NTL.

Recirculating leach bed

The recirculating leach bed is a closed-cell system that circulates nutrient-amended water through contaminated soil. Air diffusers add oxygen to the water. The system was designed so that the lined cell and associated piping could be abandoned in place once soils had been remediated. The above-ground mechanical equipment, which is the primary cost associated with this type of system, could then be used at other locations.

Recirculating leach beds are similar to slurry reactors. The concept is to build a lined containment area to serve as a bioreactor (Fig. 7). Either a pit (generally resulting from the excavation), a bermed perimeter, or a combination can be used, depending on available materials. Contaminated soil is placed into the bioreactor and, through an inexpensive PVC distribution system, aerated and nutrient-amended water is recirculated into the bottom of the bioreactor, upwards through the contaminated soil, and then through overlying ponded and aerated water. Skid-mounted mechanical systems include a mixing tank and circulation pumps for water and air.

Design

The 26- × 26-ft (8- × 8-m) pit was lined with a nominal 20-mil (0.508-mm-thick), woven, black

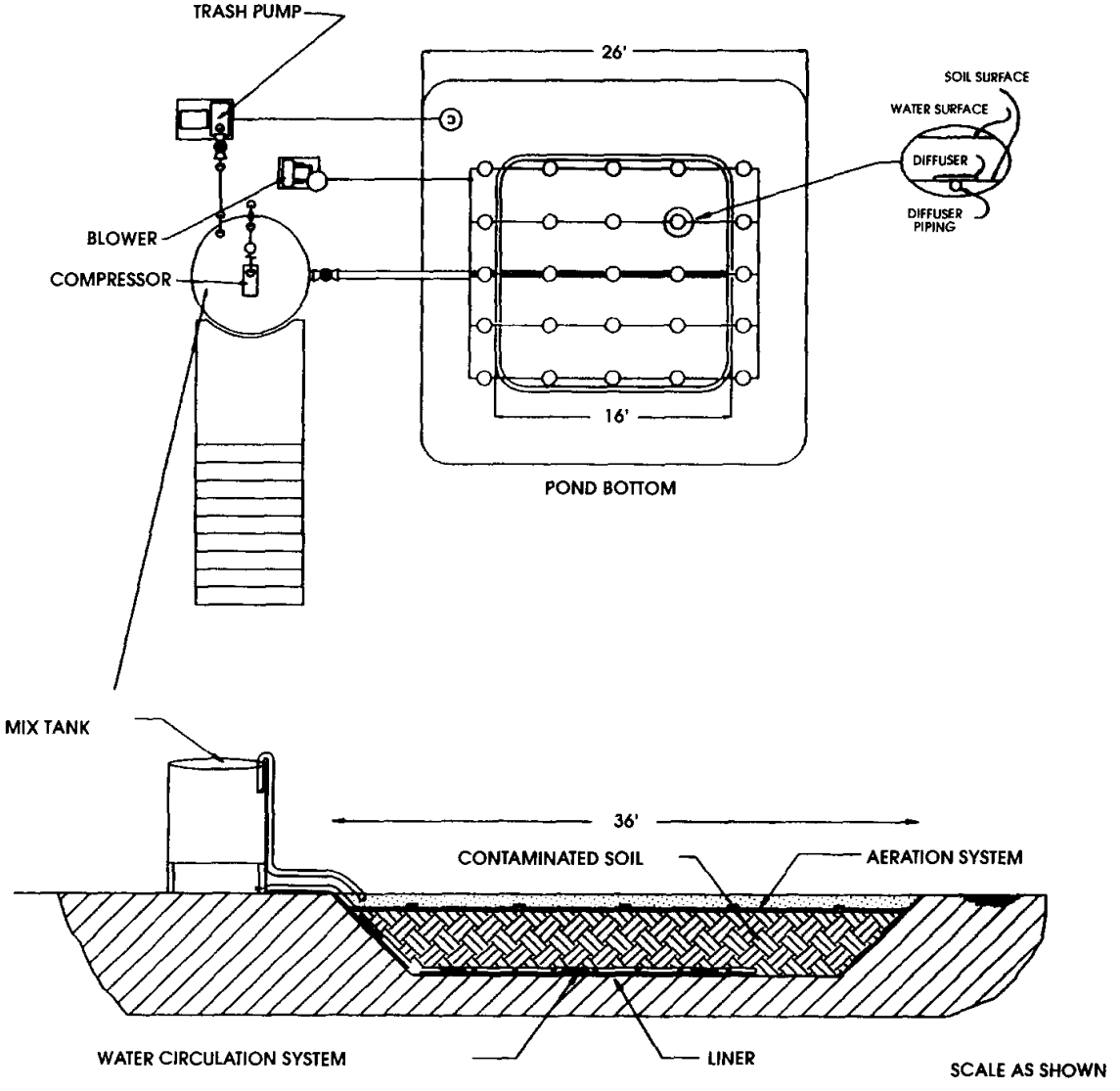

Figure 7. Recirculating leachbed system (1 ft = 0.3048 m).

HDPE scrim, coated on both sides with black HDPE. A water distribution system of 4-in. (10-cm) perforated schedule 40 PVC pipe was placed on top of the liner and covered with contaminated soil. An air header constructed of 4-in. (10-cm) schedule 40 PVC pipe was placed just below the surface of the contaminated soil, with 25 air diffusers attached to the piping located 4 in. (10-cm) above the soil surface. Water is added to the pit, saturating the contaminated soil, and submerging the air diffusers.

Water is circulated through the system using a 1-hp (10-kg cal/min) trash pump to extract water from the surface of the leach bed. The water is pumped to a 1000-gal. (3785-L) fertilizer mix tank and is allowed to flow by gravity from the bottom of the tank to the water distribution piping in the bottom of the pit. The water then percolates up through the soil mass carrying nutrients and oxygen to the hydrocarbon degrading bacteria. A 9-kW immersion heater is placed in the tank to elevate the temperature of the circulating water.

Air is supplied to the diffusers by a 2.5-hp (25-kg cal/min) regenerative blower. Aeration was also provided in the mix tank by an air compressor, attached to a single air diffuser located in the bottom of the tank.

Construction

The leach bed was installed at the location of the cross-shaped burn pit (Fig. 1c). Contaminated material in the area was excavated and moved to the landfarm facility and the area was back-filled with mechanically compacted sandy-silt material. The leach bed pit was then excavated and recompacted. The liner was factory seamed and arrived at the site as a single 55- × 55-ft (16.75- × 16.75-m) sheet. The liner was fitted into the excavation and the water distribution manifold was placed at the bottom of the pit. Approximately 150 yd^3 (115 m^3) of contaminated soil that was stockpiled in the landfarm was placed in the pit. The air distribution header was buried by hand at the surface of the contaminated material and the skid-mounted mechanical equipment was moved to the site and plumbed to the air and water distribution systems.

Operation

Beginning on 9 August 1991, water was pumped from the infiltration gallery well to fill the leach bed system. Initially, the air manifold floated to the surface and sandbags were used to anchor it in place. On 12 and 13 August, water continued to be pumped into the pit until the water level was approximately 1 ft (30 cm) above the surface of the contaminated soil. On 17 August the water level had receded and more water was added. After water had to be added several times, it was apparent that the liner system had leaked. Approximately 35,000 gal. (132,000 L) of water was pumped into the pit. This is enough to fill the empty pit. Although the cause of the leak has not been verified, several possibilities exist: mechanical damage during placement of the contaminated soil with the backhoe; tearing of the liner at a seam as it was loaded with soil; puncturing of the liner by rocks in the fill material because the liner was not protected by sand or cushion fabric; or cracks in the thin HDPE coating covering the scrim when the liner was folded into the corners of the pit.

Result

Although we encountered problems with the recirculating leach bed at the FIA site, a member of our research team was involved in designing and operating another recirculating leach bed at more northerly location. At this location, TPH levels in a diesel- and waste-oil-contaminated soil decreased from between 300 and 47,000 mg/kg to between 240 and 570 mg/kg in 5 weeks at Anatuvuk Pass, in northern Alaskan. Corresponding values for petroleum and hydrocarbon-degrading microorganisms, as determined by the sheen screen technique (Brown and Braddock 1990), increased from 1.8×10^4/g to 4.5×10^6/g. Final diesel-range organics, after 8 weeks of treatment, were less than 200 mg/kg.

DISCUSSION AND CONCLUSIONS

Landfarm

The results from the landfarm treatment are promising and significant. A seven-fold variability in rates suggested that the slower rates could be improved to match or approach the faster rates. Faster degradation rates would reduce the time and cost required for treatment and consequently reduce the chance of leaching or off-site migration during treatment. At least part of the difference in rates may be ascribable to moisture and nutrient additions. Evidence of this is seen in the pattern of the degradation variability, which appeared to correspond to the pattern of irrigation and fertilization. Owing to the nature of the

couplings in the irrigation lines, the center of the site was more heavily treated than the edges.

The greatest operational problem that we encountered in the landfarm so far is the management of excessive soil moisture. Spring snow removal is the only way of limiting water input from precipitation. High soil-moisture content during the early summer may not allow tillage, shortening an already brief operating season. Evaporation of excess moisture may be enhanced by pumping water from the drain system, and spraying it on the surface of the landfarm. However, the pumping rate for the underdrain system is limited by the rate of water percolation through the filter rock to the perforated drainage pipe.

On the basis of testing and observation, landfarming of the petroleum-contaminated soils from the old burn pit site appears to be a viable method of remediation. With appropriate nutrient amendments, the landfarm may be used to remediate 1100 to 1600 yd^3 (841 to 1223 m^3) of material during one summer season.

Infiltration gallery

Because of the difficulty in obtaining sufficient data from an in-situ, saturated system, it is difficult to draw any definite conclusions regarding the operation of the infiltration gallery. However, some general observations can be made. The significant reduction in the iron (Fe) concentrations in the groundwater during operation of the facility tells us that iron is precipitating. This was expected, but, to date, it has not excessively plugged the gallery walls or bottom. There has been some mounding of water in the gallery, indicating that the precipitation of iron is slowing the movement of water away from the gallery.

Dissolved oxygen concentrations at the gallery monitoring wells remained low (less than 10 mg/L) throughout the operating periods. Oxygen concentrations were slightly higher in the wells closer to the gallery, showing the influence of the aeration system. Also, phosphate (PO_4) was not detected at any of the wells during the period when it was added to the infiltration water at a final concentration of approximately 4 mg/L. These factors would be expected to lower the total population of microorganisms and slow their metabolic processes.

Plans are to continue monitoring of groundwater concentrations of aromatic hydrocarbons in wells next to the infiltration gallery. Soil contaminant levels around the gallery will be quantified to see if more treatment is required. Further operation of the infiltration gallery will be based on continued monitoring.

Recirculating leach bed

We encountered three problems during the brief operation of the leach bed. First, the air manifold floated to the surface. This should be anchored using cables and "deadmen" in future installations. Second, "piping" of water was observed in the soils immediately above the water distribution manifold. This will short-circuit the flow of nutrients and oxygen through the entire soil mass, potentially slowing the rate of remediation. Third, it may be necessary to install a heavier liner and to provide better protection for it by installing cushion fabric or a layer of sand.

The more rapid remediation attained with the recirculating leach bed can be used alone or in conjunction with landfarming and could provide an expedient means to treat highly contaminated soil. This would increase the potential for landfarming of the remaining soil without liner requirements.

Because of the relatively small amount of soil that the leach bed can remediate relative to the quantity of contaminated soil located at the CFR site, there are no plans to reconstruct it. Contaminated soils in the pit will be moved to the landfarm in the future. The equipment used with the leach bed may be useful for remediating fuel-contaminated water generated in conjunction with fire training exercises at the new lined fire-training pit recently constructed at FIA.

LITERATURE CITED

Anonymous (1991) Contract documents and specifications for Fairbanks International Airport, Experimental Bioremediation Project, Project Number 65096. Sponsored by the Department of Transportation and Public Facilities, Statewide Research, Fairbanks International Airport, USA Cold Regions Research and Engineering Laboratory, and USA Construction Engineering Research Laboratory.

Braley, W.A. (1991) The Fairbanks International Airport experimental bioremediation project. Presented at the *BP Exploration Alaska Soil Remediation Workshop, 19–20 November, Anchorage, Alaska.*

Braley, W.A. (1993) The Fairbanks International Airport experimental bioremediation project preliminary report. Alaska Department of Transpor-

tation and Public Facilities. Fairbanks International Airport, Fairbanks, Alaska.

Brown, E.J., and J.F. Braddock (1990) Sheen screen, a miniaturized most-probable-number method for enumeration of oil-degrading microorganisms. *Applied Environmental Microbiology*, **56**: 3895–3896.

Brown, E.J., S.M. Resnick, C. Rebstock, H.V. Luong, and E.J. Lindstrom (1991) UAF radiorespirometric protocol for assessing hydrocarbon mineralization potential in environmental samples. *Biodegradation*, **2**: 25–31.

Dames and Moore (1992) Subsurface investigation, Tesoro Fairbanks terminal, Fairbanks International Airport Industrial Park, Fairbanks, Alaska. Report prepared for Tesoro Alaska Petroleum Company. Dames and Moore, Fairbanks, Alaska.

Kuroda, D., and D. Nusz (1994) Use of innovative technology for environmental restoration by U.S. Army Corps of Engineers. In *Proceedings of the Water Environment Federation 67th Annual Conference, 15–19 October 1994, Chicago, Illinois.*

Rawls-McAfee, L.T., and E.J. Brown (1992) Fairbanks International Airport bioremediation demonstration project, microbiology: Final report to the Alaska Department of Transportation and Public Facilities. University of Alaska Fairbanks, Institute of Northern Engineering, Water Research Center.

Reynolds, C.M. (1993) Field measured bioremediation rates in a cold region landfarm: Spatial variability relationships. In *Proceedings of the Seventh Annual East Coast Conference on Hydrocarbon Contaminated Soils* (P.T. Kostecki and E.J. Calabrese, Ed.), Chelsea, Michigan: Lewis Publishers, p. 487–499.

Reynolds, C.M., M. Travis, W.A. Braley, and R.J. Scholze (1994) Applying field expedient bioreactors and landfarming in cold climates. In *Second International Symposium, In-Situ and Onsite Bioreclamation*, Chelsea, Michigan: Lewis Publishers, p. 100–106.

Shannon and Wilson, Inc. (1989) Final report on soil and groundwater investigation, Fairbanks International Airport Fire Training Pits. Prepared for State of Alaska, Department of Transportation and Public Facilities, Northern Region Design and Construction.

Walker, G.D., and M.D. Travis (1990) Electromagnetic induction survey of the Fairbanks International Airport crash, fire, and rescue burn site for hydrocarbon contamination plumes in frozen soil. Alaska Department of Transportation and Public Facilities, Statewide Research, Fairbanks, Alaska, Report No. AK-RD-90-11.

BIBLIOGRAPHY

Reynolds, C.M. (1991) Bioremediation of organic-contaminated soil. Invited Paper, *1991 Annual Meeting, American Society of Agronomy, Denver, Colorado.*

Reynolds, C.M. (1992) Estimating biodegradation variability in an Alaskan landfarm. *Annual Meetings, American Society of Agronomy, 1–6 November 1992.*

Reynolds, C.M. (1992) Field measured bioremediation rates in a cold region landfarm: Spatial variability. *Seventh Annual East Coast Conference on Hydrocarbon Contaminated Soils, University of Massachusetts, Amherst.*

Reynolds, C.M. (1993) Contaminated soil treatment in cold regions. *American Public Works Association Reporter*, July.

Reynolds, C.M. (1993) Substrate concentration and degradation rates in Alaskan soil following thaw. *Gordon Research Conferences, Applied and Environmental Microbiology: Field Experience, 11–16 July, Colby-Sawyer College, New Hampshire.*

Reynolds, C.M. (1994) Biological processes in freeze-thaw soils. In *Proceedings, Frozen Soils Workshop, 22–23 March, Morris, Minnesota.* University of Minnesota West Central Experiment Station. Minnesota Academy of Science Journal.

Reynolds, C.M., and W.A. Braley (1991) Bioremediation of hydrocarbon contaminated soils in northern climates. *DoD Bioremediation Technologies Workshop, NCEL, Port Hueneme, California, 3–5 December 1991.*

Reynolds, C.M., and G.S. Brar (1994) Treatment of organic contaminated soils in cold regions. *Agronomy Abstracts 1994.* Seattle, Washington: Soil Science Society of America, 13–18 November.

Reynolds, C.M., and R.J. Scholtz (1992) Bioremediation: Landfarming and recirculating leach bed. *U.S. Army Corps of Engineers' Second Annual Innovative Technology Transfer Workshop, Omaha, Nebraska, 7–8 July 1992.*

Reynolds, C.M., W.A. Braley, and E.J. Brown (1991) Bioremediation demonstration project, hydrocarbon-contaminated soil at Fairbanks International Airport. Invited paper. *BP Exploration—Soil Remediation Workshop, Anchorage, Alaska, 19–20 November 1991.*

Travis, M.D. (1990) Bioremediation of petroleum spills in Arctic and Sub Arctic environments: A feasibility study (Updated Report). Alaska Department of Transportation and Public Facilities Statewide Research, Fairbanks, Revised Report No. AK-RD-90-07.

REPORT DOCUMENTATION PAGE

Form Approved
OMB No. 0704-0188

Public reporting burden for this collection of information is estimated to average 1 hour per response, including the time for reviewing instructions, searching existing data sources, gathering and maintaining the data needed, and completing and reviewing the collection of information. Send comments regarding this burden estimate or any other aspect of this collection of information, including suggestion for reducing this burden, to Washington Headquarters Services, Directorate for Information Operations and Reports, 1215 Jefferson Davis Highway, Suite 1204, Arlington, VA 22202-4302, and to the Office of Management and Budget, Paperwork Reduction Project (0704-0188), Washington, DC 20503.

1. AGENCY USE ONLY (Leave blank)	2. REPORT DATE	3. REPORT TYPE AND DATES COVERED
	March 1998	

4. TITLE AND SUBTITLE
Bioremediation of Hydrocarbon-Contaminated Soils and Groundwater in Northern Climates

5. FUNDING NUMBERS
Construction Productivity Advancement (CPAR) Research Program

6. AUTHORS
Charles M. Reynolds, W. Alan Braley, Michael D. Travis, Lawrence B. Perry, and Iskandar K. Iskandar

7. PERFORMING ORGANIZATION NAME(S) AND ADDRESS(ES)
U.S. Army Cold Regions Research and Engineering Laboratory
72 Lyme Road
Hanover, New Hampshire 03755-1290

8. PERFORMING ORGANIZATION REPORT NUMBER
Special Report 98-5

9. SPONSORING/MONITORING AGENCY NAME(S) AND ADDRESS(ES)
Office of the Chief of Engineers
Washington, D.C. 20314-1000

10. SPONSORING/MONITORING AGENCY REPORT NUMBER

11. SUPPLEMENTARY NOTES
For conversion of SI units to non-SI units of measurement, consult ASTM Standard E380-93, *Standard Practice for Use of the International System of Units*, published by the American Society for Testing and Materials, 1916 Race St., Philadelphia, Pa. 19103.

12a. DISTRIBUTION/AVAILABILITY STATEMENT
Approved for public release; distribution is unlimited.

Available from NTIS, Springfield, Virginia 22161

12b. DISTRIBUTION CODE

13. ABSTRACT (*Maximum 200 words*)

A field demonstration and research project was conducted in Fairbanks, Alaska, to demonstrate, evaluate, and document the construction and operation of three selected bioremediation technologies—landfarming, recirculating leachbeds, and infiltration galleries. Landfarming involves adding water and nutrients to contaminated soil to stimulate microbial activity and contaminant degradation. Infiltration galleries are dynamic in-situ treatment systems designed to stimulate microbial activity and subsequent hydrocarbon degradation by circulating nutrient- and oxygen-amended water through petroleum-contaminated soil. Recirculating leachbeds, in a way similar to slurry reactors, aerate and mix nutrients with contaminated soil, and can be built as on-site bioreactors. Estimated biotreatment costs in the landfarm were between $20 to $30 per cubic yard ($15 to $23 per cubic meter). Nutrient placement has been demonstrated to be a critical factor, even though the site is tilled and mixed frequently. Success of the infiltration gallery was more difficult to document. Benzene was detected at less than 2 ppb and BTEX levels were less than 5 ppb for water extracted from the pumping well during 1992, which is significantly lower than the 1991 levels. Problems were encountered during the brief operation of the recirculating leach bed, but a similar system has performed well. Relatively simple, low-cost techniques provided significant potential for improving degradation rates.

14. SUBJECT TERMS			15. NUMBER OF PAGES
Alaska	Bioremediation	Cold regions	28
Bioreclamation	Biotreatment	Landfarm	16. PRICE CODE

17. SECURITY CLASSIFICATION OF REPORT	18. SECURITY CLASSIFICATION OF THIS PAGE	19. SECURITY CLASSIFICATION OF ABSTRACT	20. LIMITATION OF ABSTRACT
UNCLASSIFIED	UNCLASSIFIED	UNCLASSIFIED	UL

DEPARTMENT OF THE ARMY
COLD REGIONS RESEARCH AND ENGINEERING LABORATORY
CORPS OF ENGINEERS
72 LYME ROAD
HANOVER, NEW HAMPSHIRE 03755-1290