ESTCP
Cost and Performance Report

(WP-0407)

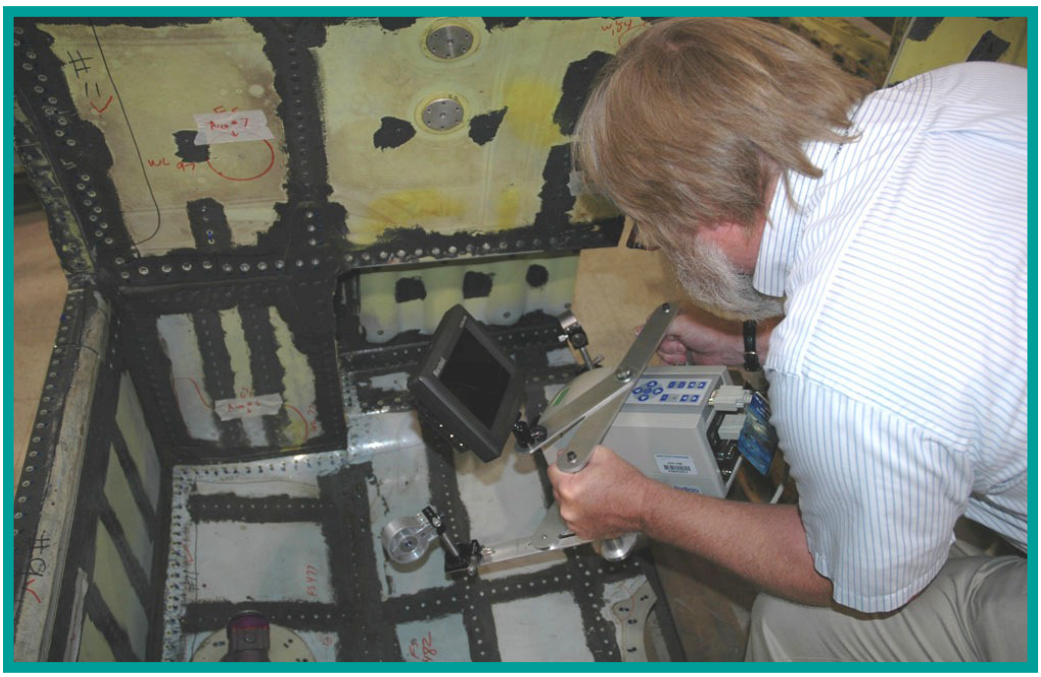

Infrared Reflectance Imaging for Environmentally Friendly Corrosion Inspection Through Organic Coatings

June 2008

ENVIRONMENTAL SECURITY
TECHNOLOGY CERTIFICATION PROGRAM

U.S. Department of Defense

COST & PERFORMANCE REPORT
ESTCP Project: WP-0407

TABLE OF CONTENTS

Page

1.0 EXECUTIVE SUMMARY 1

2.0 TECHNOLOGY DESCRIPTION 3
- 2.1 TECHNOLOGY DEVELOPMENT AND APPLICATION 3
  - 2.1.1 Background and Development 3
  - 2.1.2 Applicable Systems 3
- 2.2 IRRIT SYSTEM DESCRIPTION 4
  - 2.2.1 Mobilization, Installation, and Operational Requirements 4
  - 2.2.2 Modifications to the Current Process 5
- 2.3 PREVIOUS TESTING OF THE TECHNOLOGY 5
- 2.4 ADVANTAGES AND LIMITATIONS OF THE TECHNOLOGY 6

3.0 DEMONSTRATION DESIGN 9
- 3.1 PERFORMANCE OBJECTIVES 9
- 3.2 SELECTION OF TEST PLATFORM 9
  - 3.2.1 P-3 Demonstration 9
  - 3.2.2 B-52 & KC-135 Demonstration 10
- 3.3 TEST FACILITY HISTORY/CHARACTERISTICS 10
  - 3.3.1 P-3 Demonstration 10
  - 3.3.2 B-52 & KC-135 Demonstration 11
- 3.4 PHYSICAL SETUP AND OPERATION 11
- 3.5 SAMPLING/MONITORING PROCEDURES 12
- 3.6 ANALYTICAL PROCEDURES 13

4.0 PERFORMANCE ASSESSMENT 15
- 4.1 PERFORMANCE DATA 15
  - 4.1.1 Scan Rates 18
  - 4.1.2 Results Summary 18
- 4.2 PERFORMANCE CRITERIA AND DATA EVALUATION 19

5.0 COST ASSESSMENT 21
- 5.1 COST REPORTING 21
  - 5.1.1 Baseline Maintenance Procedure 21
  - 5.1.2 Alternative Scenario Description: Condition-Based Maintenance 21
  - 5.1.3 Maintenance Cycle Extension Scenario 22
- 5.2 COST ANALYSIS 22
  - 5.2.1 Condition-Based Maintenance Scenario Cost Analysis 23
  - 5.2.2 Maintenance Cycle Extension Scenario Cost Analysis 24
  - 5.2.3 Life-Cycle Cost Analysis 25
  - 5.2.4 Inner Mold Line Costs and Savings 26

TABLE OF CONTENTS (continued)

Page

5.2.5 Cost Analysis Summary 26

6.0 IMPLEMENTATION ISSUES 29
6.1 COST OBSERVATIONS 29
6.2 PERFORMANCE OBSERVATIONS 30
6.3 SCALE-UP 31
6.4 OTHER SIGNIFICANT OBSERVATIONS 31
6.5 LESSONS LEARNED 31
6.6 END-USER/ORIGINAL EQUIPMENT MANUFACTURER ISSUES 31
6.7 APPROACH TO REGULATORY COMPLIANCE AND ACCEPTANCE 32

7.0 REFERENCES 33

APPENDIX A POINTS OF CONTACT A-1

LIST OF FIGURES

Page

Figure 1. Schematic of IRRIT System, Including Optional Displays 4
Figure 2. IRRIT System in Use 5
Figure 3. Gantt Chart for Navy P-3 Dem/Val: OML 12
Figure 4. Gantt Chart for USAF KC-135 and B-52 Dem/Val: IML 12
Figure 5. Summary of IRRIT and Visual Inspection Results on P-3 OMLs..... 18

LIST OF TABLES

Page

Table 1. Advantages and Limitations. 7
Table 2. Performance Objectives. 9
Table 3. Navy P-3 OML Real-Time Results Versus Postprocessing Results. 15
Table 4. USAF KC-135 and B-52 IML Real-Time Results. 16
Table 5. Paint and Coating Systems Tested with IRRIT. 17
Table 6. Expected Performance and Performance Confirmation Methods. 19
Table 7. Baseline Costs per Year. 22
Table 8. Cost per Aircraft of Condition-Based Maintenance. 23
Table 9. Total Procedure Costs. 23
Table 10. Capital and Annual Cost of Condition-Based Maintenance. 24
Table 11. Baseline Versus Condition-Based VOC Emissions. 24
Table 12. Maintenance Cycle Extension Cost Comparison. 25
Table 13. Maintenance Cycle Extension Payback Period and EHS Savings. 25
Table 14. 15-Year Life-Cycle Costs. 25
Table 15. 15-Year Life-Cycle Performance Measures. 26
Table 16. Single IRRIT System Cost. 29
Table 17. Inspection Error Contributing Factors—OML. 30
Table 18. Inspection Error Contributing Factors—IML. 30

ACRONYMS AND ABBREVIATIONS

AAB	Aging Aircraft Branch
AFB	Air Force Base
AFRL	Air Force Research Laboratory
BB	Blackbody
CAA	Clean Air Act
CARC	chemical agent resistant coating
CBA	cost-benefit analysis
COTS	commercial off-the-shelf
CPC	corrosion preventative compound
CSG	Corrosion Steering Group
CTC	Concurrent Technologies Corporation
Dem/Val	demonstration/validation
DoD	Department of Defense
ECAM	Environmental Cost Analysis Methodology
EHS	Environmental, Health, and Safety
ESTCP	Environmental Security Technology Certification Program
FAA	Federal Aviation Administration
FMTV	family of medium tactical vehicles
FST	Field Support Team
GFIC	ground fault interrupt circuit
HAFB	Hill Air Force Base
HAP	hazardous air pollutant
HAZMAT	hazardous material
IML	inner mold line
IPA	isopropyl alcohol
IR	infrared
IRR	internal rate of return
IRRIT	infrared reflectance imaging technique
JCAA	Joint Council on Aging Aircraft
LCD	liquid crystal display
LPS	local process specification
MOI	magneto optic imaging
MWIR	mid-wave infrared

ACRONYMS AND ABBREVIATIONS (continued)

NAVAIR	Naval Air Systems Command
NDI	nondestructive inspection
NESHAP	National Emission Standards for Hazardous Air Pollutants
NGC	Northrop Grumman Corporation
NPV	net present value
OC-ALC	Oklahoma City Air Logistics Center
OEM	original equipment manufacturer
OML	outer mold line
P2	pollution prevention
PI	principal investigator
PMB	plastic media blast
POC	point of contact
RCRA	Resource Conservation Recovery Act
RCM	reliability centered maintenance
SERDP	Strategic Environmental Research and Development Program
USAF	U.S. Air Force
USCG	U.S. Coast Guard
USN	U.S. Navy
VOC	volatile organic compounds
WP-AFB	Wright Patterson Air Force Base

ACKNOWLEDGEMENTS

This report was performed under Environmental Security Technology Certification Program (ESTCP), *Infrared Reflectance Imaging for Environmentally Friendly Corrosion Inspection Through Organic Coatings*, Project Number WP-0407. Wright Patterson Air Force Base (WP-AFB), Air Force Research Laboratory (AFRL), Materials Directorate, was the lead government organization for project management for this project. Mr. John Benfer of Naval Air Systems Command (NAVAIR) Jacksonville was the lead principal investigator (PI). He provided strategic direction and technical leadership, and he directed overall programmatic decisions for the program. He was also the point of contact (POC) for performing the demonstration/validation (Dem/Val) at NAVAIR Jacksonville. Concurrent Technologies Corporation (CTC) was the prime contractor and conducted the cost-benefit analysis (CBA). Northrop Grumman Corporation (NGC) was a subcontractor to CTC and the technical lead for technology development.

The authors of this report are Mr. Brian Pollock (WP-AFB project manager), Mr. Matthew Campbell (CTC project manager), Mr. John Weir (NGC project manager), Mr. John Benfer (NAVAIR Jacksonville, principal investigator), Mr. Steven Chu (NGC), Mr. Nils Fonneland (NGC), Mr. Dennis Leyble (NGC), Mr. Mike Miller (CTC), and Mr. David Allen (ASM Management).

The authors would like to sincerely acknowledge all who participated and cooperated during the project. In particular, Mr. Charles Pellerin (ESTCP-Weapons Systems and Platforms Program Manager), Mr. John Speers (WP-AFB), Mr. Joseph Leone (WP-AFB), Mr. Ryan Westover (NAVAIR Jacksonville), Mr. Dan Marlowe (NAVAIR Jacksonville), Mr. Paul Kenny (NAVAIR Jacksonville), Ms. Rachel Santos (NAVAIR Jacksonville), Mr. Tom Cowherd (NAVAIR Jacksonville), Mr. Keith Bennie (NAVAIR Jacksonville), Dr. Randy Davis (NAVAIR Patuxent River), Mr. Jack Kelley (Army Research Laboratory), Mr. Rusty Waldrop (U.S. Coast Guard [USCG]), Mr. Sam Benavides (USCG), Mr. Mike Hanson (USCG), Mr. Steve West (OC-ALC), Mr. Carvel Davis (OC-ALC), Mr. David Tanner (OC-ALC), Mr. Bernie Habib (Oklahoma City Air Logistics Center [OC-ALC]), Dr. Robert Silberstein (NGC), Dr. Donald DiMarzio (NGC), Mr. Kevin Cook (NGC), Mr. John Munyak (NGC), Mr. Alan Sinowitz (NGC), Mr. Larry Gintert (CTC), Mr. Michael Beebe (CTC), and Mr. Steve Cargill (CTC). The support of these individuals made the Dem/Val process a success.

Technical material contained in this report has been approved for public release.

This page left blank intentionally.

1.0 EXECUTIVE SUMMARY

Prematurely stripping aircraft for corrosion inspection or maintenance purposes causes excess pollution in the form of hazardous air pollutants (HAP), volatile organic compounds (VOC) emissions, Resource Conservation Recovery Act (RCRA) waste, and carcinogenic chromates. With government policies driving waste reduction, these waste streams are a concern. The National Emission Standard for Hazardous Air Pollutants (NESHAP) has been the principal compliance driver over the last decade for the aerospace industry, in particular NESHAP 40 CFR Part 63. Hazardous material (HAZMAT) reduction is driven by the Clean Air Act (CAA) and RCRA through pollution prevention (P2) efforts. Many P2 projects impact both CAA and RCRA concurrently.

The recently developed infrared reflectance imaging technique (IRRIT) has been identified as a technology that can potentially reduce these waste streams. IRRIT utilizes mid-wave infrared (MWIR) (3-5 micrometers of light) to image corrosion through coatings. By stripping coatings only when IRRIT inspection indicates that corrosion is present, pollution from premature aircraft stripping can be minimized.

It was found during demonstration and validation testing that the IRRIT system consistently identified corrosion through coatings more accurately than an unassisted visual inspection. The contributing factor for such a large deviation of inspection results between visual and IRRIT was due to the detection methods utilized for each technique. The IRRIT method directly images corrosion by-product through the paint system due to reflectance contrast differences of the substrate. The visual method relies on the identification of paint surface irregularities/blistering (i.e., paint degradation) as a result of substrate volume changes associated with corrosion formation.

In this Environmental Security Technology Certification Program (ESTCP) project, Infrared Reflectance Imaging for Environmentally Friendly Corrosion Inspection Through Organic Coatings, the objective of the project was to conduct a demonstration/validation (Dem/Val) of the capability of IRRIT to detect corrosion through aircraft coating systems versus visual corrosion inspection. Specific Dem/Val goals were to:

- Compare IRRIT with current visual inspection techniques to assess corrosion
- Collect and analyze Dem/Val data
- Determine cost/waste reductions from a reduction in premature aircraft stripping by conducting a cost-benefit analysis (CBA)
- Develop recommendations for technology transfer

The IRRIT system was evaluated against visual inspection on aircraft from several services, including the U.S. Air Force (USAF), U.S. Coast Guard (USCG), and U.S. Navy (USN). Examined aircraft included the A-10, B-52, KC-135, P-3, and HU-25. Both aircraft exteriors and interiors (outer mold line [OML] and inner mold line [IML], respectively) were examined to assess the various coating systems used and the geometric effects for these areas. The Dem/Val procedure was to visually inspect the target area, collect IRRIT images, strip the paint system, and visually validate all reported corrosion.

Results of the project were as follows:

- IRRIT was confirmed as an improved method of corrosion inspection compared to current visual inspection methods with 70-80% accuracy obtained during demonstrations, significantly higher than the 5-25% accuracy of the visual inspection method.
- IRRIT scan rate during the Dem/Val was shown to be approximately 150 sq ft per hour, depending on corrosion density. It is anticipated that more ergonomic camera designs will yield an increased scan rate.
- IRRIT limitations were determined, including limitations based on coating thickness and type, surface cleanliness, and line-of-sight requirements.
- Potential cost/waste reductions resulting from reduced aircraft strip and repaint maintenance operations were calculated based on the ability of IRRIT use to prevent premature aircraft stripping. Calculations indicate that maintenance deferment of a single medium-sized aircraft (using a P-3 Orion as a baseline) could include:
  - VOC and chromate reductions approaching 3,000 lb and 25 lb, respectively,
  - HAZMAT reductions approaching 11,000 lb,
  - Cost savings approaching $130,000, greater than the cost of a single IRRIT camera system.

Primary end users for the IRRIT system will consist of in-service depot-level maintainers of fielded aircraft weapon systems and their associated support equipment within the sustainment community. Other end users could include inspectors, quality assurance specialists, and engineers within applicable maintenance and engineering departments of the Department of Defense (DoD).

IRRIT system procurement may be performed as individual component purchases later integrated by the user community or through IRRIT System Kits produced and provided by Northrop Grumman Technical Services (Bethpage, New York), including operating instructions and support for the IRRIT MWIR camera plus all required accessories.

2.0 TECHNOLOGY DESCRIPTION

2.1 TECHNOLOGY DEVELOPMENT AND APPLICATION

2.1.1 Background and Development

IRRIT was successfully developed under a previous government contract managed by the Strategic Environmental Research and Development Program (SERDP) Project PP-1137 under the Secretary of Defense Office with Northrop Grumman Corporation (NGC) as the prime contractor. ESTCP supported the demonstration and validation of the IRRIT system in the effort, *Infrared Reflectance Imaging for Environmentally Friendly Corrosion Inspection Through Organic Coatings*, WP-0407.

Under the SERDP program, IRRIT had shown promise over other nondestructive methods that have been evaluated for detection of corrosion under paint, which is discussed in further detail in Section 2.4. One of the limitations of most conventional nondestructive inspection (NDI) techniques is the lack of sensitivity to relatively small concentrations of corrosion products at the metal/coating interface. Ultrasonic test and eddy current inspection, two of the most widely used NDI techniques in the aerospace community, can be used to detect relatively large amounts of material loss due to corrosion, but they do not meet the objective of detecting corrosion under paint in its earliest stages. IRRIT, however, uses MWIR light, which transmits through many aircraft coatings (coatings are typically optimized for visual light opacity, not infrared [IR]). Substrate imaging is a result of contrast associated with varying reflection intensities of the IR light between corroded and noncorroded metal. In short, IR cameras can see through paint and image corrosion. Because IRRIT creates a visual image of the substrate beneath the coating, it detects even small amounts of corrosion in early stages. In this project, IRRIT was validated to be an enhancing supplement to visual inspection and other NDI systems (e.g., eddy current).

2.1.2 Applicable Systems

IRRIT was successfully demonstrated on both OML and IML coatings. It is also applicable for use on all DoD weapon systems that utilize coating systems transparent to MWIR. The original direction for this project was to demonstrate the capability of MWIR to image corrosion through both air and ground vehicle coating systems. However, initial screening tests showed the chemical agent resistant coating (CARC) used on U.S. Army vehicles to be opaque to MWIR transmission. As CARC is utilized on all Army ground vehicles, the project's focus was shifted entirely to aircraft applications. While many aircraft coatings proved compatible with IRRIT, OML coatings of some aircraft (e.g., low IR transmission coatings) were also opaque to MWIR transmission. See Table 2 for a list of all coatings tested.

As a result, this effort focused on demonstrating IRRIT on aircraft OML and IML coatings verified as compatible in predemonstration testing. The IRRIT was successfully demonstrated on these aircraft coatings. It is not limited to aircraft and would be applicable for use on all DoD weapon systems that utilize coating systems transparent to MWIR. When utilized on coating systems that do not block MWIR, IRRIT excels.

2.2 IRRIT SYSTEM DESCRIPTION

2.2.1 Mobilization, Installation, and Operational Requirements

The IRRIT system is man portable. It currently consists of a single IR camera, small IR lamps, and a conventional liquid crystal display (LCD) (see schematic in Figure 1). The system used in the Dem/Vals was a 13-pound IR camera, but substantial size reductions are possible and alternative cameras were investigated during the effort. Analog/digital video output is compatible with most commercial off-the-shelf (COTS) displays (a 17-in LCD monitor was typically used, and a 5-in screen was also mounted on the camera, and a heads-up display was demonstrated). Figure 2 shows the IRRIT system in use.

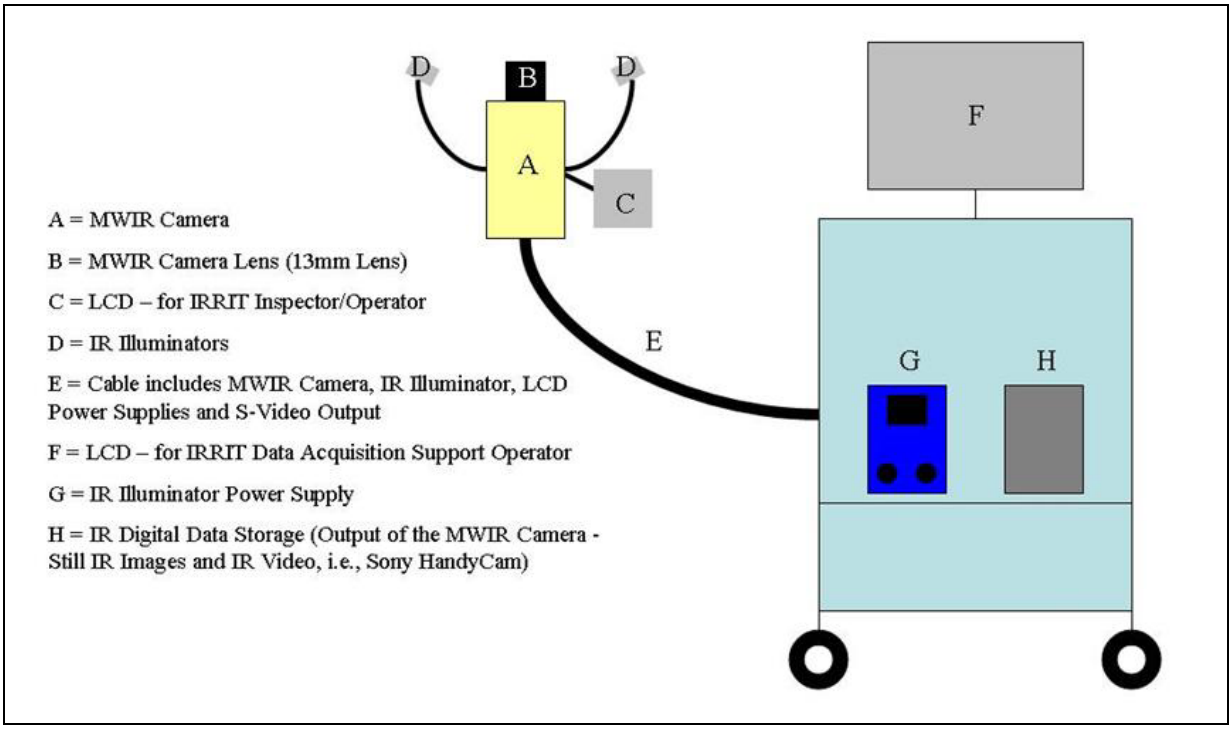

Figure 1. Schematic of IRRIT System, Including Optional Displays.

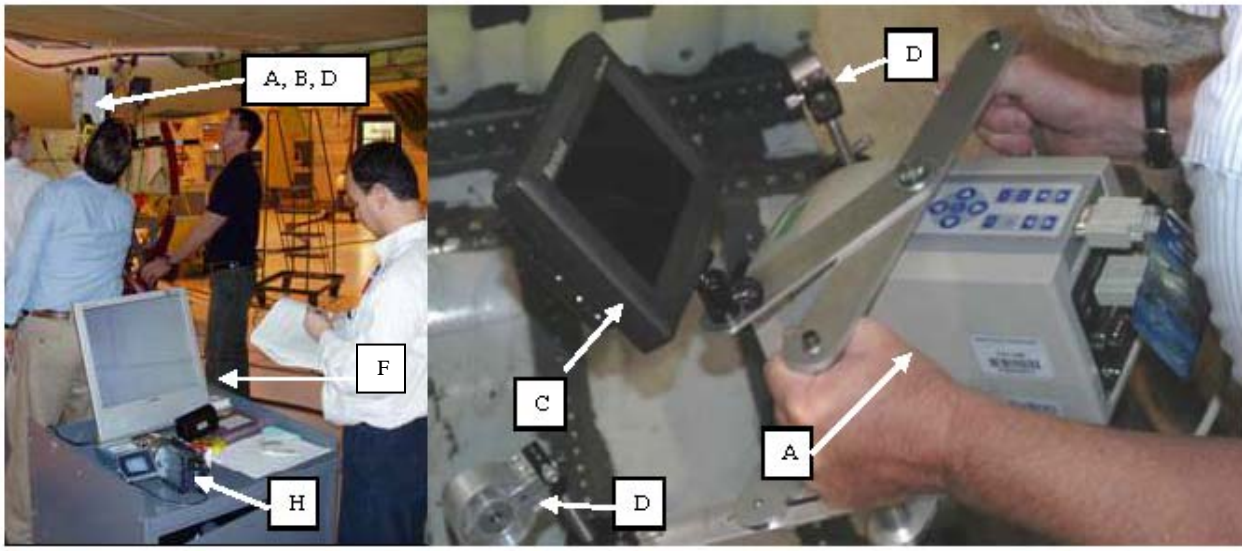

Figure 2. IRRIT System in Use (same legend as Figure 1).

IRRIT is relatively easy to use, being similar to modern video cameras in operation. The grayscale display of the IR image provides a clear picture of the substrate without the intervening layer of coating, meaning basic operation is possible without extensive training. Minimal operator training is required to avoid inspection error by learning to correctly identify whether color variations are corrosion or normal surface imperfections. Inspectors who normally perform visual inspections for corrosion can use this system with about four hours of training.

In addition to appropriate workplace environment, health, and safety requirements, the tested IRRIT unit was powered by standard 110V AC outlet current. To protect personnel from electrical shocks, ground fault interrupt circuits (GFIC) were used on the outlets. Battery-powered models are available to allow IRRIT use where AC power cannot be obtained.

2.2.2 Modifications to the Current Process

Current OML maintenance entails regularly scheduled paint stripping and coating (e.g., approximately every four years for P-3 aircraft). In those OML applications where the coating is compatible with IRRIT, IRRIT offers managers the potential to prolong maintenance intervals either by increased knowledge of the condition of the fleet, allowing less conservative intervals to be set, or by switching to a condition-based maintenance approach where the OML is stripped only if required by the condition of the substrate under the coating. The environmental and economic savings from delaying the OML paint stripping of even a single airplane can pay for the IRRIT system (see Section 5.0, Cost Assessment). Benefits to IML maintenance are less clear because of the lack of regular strip and repaint activities.

2.3 PREVIOUS TESTING OF THE TECHNOLOGY

Under the SERDP program (Project Number 1137), which ran from 1999 to 2004, the basic principles of IRRIT (and other methods for detecting corrosion under paint) were developed and tested in the laboratory. The ESTCP program, *Infrared Reflectance Imaging for Environmentally*

Friendly Corrosion Inspection Through Organic Coatings, evaluated IRRIT outside of laboratory through a formal demonstration and validation plan with USAF and Navy aircraft platforms.

Under this program several "mini-demonstrations" were conducted to assess the basic feasibility of this technology in the field before proceeding to a full Dem/Val. The first of these mini-demonstrations took place at the Fort Bragg, North Carolina, Army Facility during January and May 2005. These trips explored the potential of doing a Dem/Val at Fort Bragg on Army ground vehicles, namely the Family of Medium Tactical Vehicles (FMTV). However, laboratory testing concluded that the CARC did not allow for sufficient MWIR transmission, so the project was redirected to look at USAF IML aircraft coating systems in addition to the previously planned Navy OML aircraft coating systems.

Between the demonstrations at Fort Bragg, a mini-demonstration was held at Hill Air Force Base (HAFB) in Ogden, Utah, in March 2005. It was shown with this demonstration that corrosion could be detected in areas not readily observable without the aid of this IR inspection tool. Current practice at HAFB was to visually inspect the coatings for indications of corrosion, prior to rework of the corrosion. It was demonstrated that HAFB techniques had the potential to visually "miss" corrosion not readily observable on the surface of the coating. IR photographs clearly demonstrated that corrosion was visible under the coating using IR and not on the outer paint surface using visual inspection.

Another mini-demonstration was held at the Sandia Federal Aviation Administration (FAA) NDI Validation Center facility in Albuquerque, New Mexico, in July 2005. The USCG Aging Aircraft Branch (AAB) at the Aircraft Repair and Supply Center, Elizabeth City, North Carolina, has been an active participant in a cross-service program that includes corrosion detection under aircraft coatings. USCG AAB arranged for an HU-25 aircraft (tail #2103) to be used for the demonstration, an aircraft that was conveniently available and demonstrated IRRIT's ability to image through a high gloss coating system near its approximate thickness limit (~10 mils). This aircraft was also a good representation of the USCG HU-25 air vehicle fleet. Stakeholders included Mr. Rusty Waldrop (USCG AAB), Mr. Sam Benavides (USCG AAB), and Mr. David Moore of the FAA NDI Validation Center.

In late 2005, IRRIT was tested on corroded shell casings supplied by the U.S. Army Armament Research, Development and Engineering Center of Rock Island, Illinois. It was noted that corrosion occurred primarily inside the shell casing, which IRRIT would not be able to view.

2.4 ADVANTAGES AND LIMITATIONS OF THE TECHNOLOGY

IRRIT's advantage is in ease of use and speed. It is, effectively, visual inspection for corrosion through coatings without paint stripping. This is substantially faster and easier than other NDI corrosion inspection options, as summarized in Table 1.

Table 1. Advantages and Limitations.

Inspection Method	Estimated times to conduct corrosion survey for a 10 ft^2 surface area	Skill Level	Initial System Cost	Near Surface Detection Sensitivity Level	Comments
Ultrasonic	4 hr Set up time = 1 hr	High	Medium 30K to 100K	Low to very poor on surfaces	Interpretation issues
Eddy current, conventional	1 hr Set up time =0.5 hr	High	Medium 45K to 100K	Low, but problems with fasteners/joints	Interpretation issues/problems
Magneto optic imaging (MOI) (modified eddy current)	30 min Set up time = 0.5 hr	Medium	Low 25K	Low	Interpretation issues
Thermography	1 hr Set up time = 2 hr	High/ Medium	High 150K+	High	Images require interpretation
X-Ray	4 hr Set up time = 2 hr	High	High/Medium 50K to 125K	Medium	Health issues Work area must be cleared of personnel
Microwave	1 hr Set up time = 0.25 hr	High	Low 5K to 10K	Medium, but issues with Fasteners/joints	Edge effects Interpretation problems
IR Reflectance (IRRIT)	***2.5 min*** ***Set up time =0.5 hr***	***Low/ Medium***	***Medium*** ***70K***	***High***	***Real images*** ***Easy to interpret**** ***Real time*** ***Fast***
Visual Inspection	**10 min** **Set up time < 0.5 hr**	**Medium**	**Low** **5K**	**Medium**	**Interpretation issues**

*Unique to IRRIT: Lowest projected labor times and rates needed for cost-effective corrosion surveys. Easiest technique to interpret because of real-time images with highest fidelity of all systems compared.
Note: Setup times vary, depending on standards to be checked, equipment warm-up, and calibration.

However, certain coatings are opaque to the MWIR range utilized by IRRIT. A complete list of tested coatings, including those determined to be opaque to IRRIT, are discussed in Section 4.0, Performance Assessment, Table 5.

This page left blank intentionally.

3.0 DEMONSTRATION DESIGN

3.1 PERFORMANCE OBJECTIVES

The main performance objective of the two Dem/Val efforts was to identify corrosion under coatings with the IRRIT technology. The performance objectives are summarized in Table 2.

Table 2. Performance Objectives.

Type of Performance Objective	Primary Performance Criteria	Expected Performance (Metric)	Actual Performance
Quantitative	Product testing	Higher level of accuracy w/IRRIT regarding corrosion detection, as compared to visual inspection.	Performance criteria met
Quantitative	Hazardous materials	Projected reduction of VOC, HAP, and HAZMAT (by deferring maintenance) Pollution prevention savings resulting from reduced maintenance	Performance criteria met
Quantitative	Process waste	Projected reduction of VOC, HAP, and HAZMAT (by deferring maintenance) Pollution prevention savings resulting from reduced maintenance No known process waste generated	Performance criteria met
Quantitative	Factors affecting technology performance	Scan rate w/IRRIT will not interfere w/current maintenance flow process (Complimentary tool to visual inspection) Scan Rate of Dem/Val (Surface area inspected) Enhanced condition-based assessment	Performance criteria met

3.2 SELECTION OF TEST PLATFORM

Two facilities were chosen to Dem/Val the IRRIT technology. One facility was chosen to Dem/Val the IRRIT on a Navy aircraft OML and the second to Dem/Val the IRRIT on a USAF aircraft IML.

3.2.1 P-3 Demonstration

The P-3 Orion aircraft maintained at the Naval Air Systems Command (NAVAIR) Jacksonville, Florida, facility were selected for the OML Dem/Val as NAVAIR Jacksonville is considered a worst-case scenario for corrosion of this platform. The P-3 operates in a maritime environment that exposes the aircraft to severe corrosive conditions. The aircraft, when not on patrol, are also stationed in a maritime environment. Further, the P-3 paint system proved compatible with demonstrating the IRRIT method. As a result, a random sampling of two P-3 aircraft was conducted at NAVAIR Jacksonville in Building 101S. The selected inspected areas (fuselage

and underwing) were representative of P-3 structures and known to have corrosion, based on past history with the aircraft.

Mr. John Benfer, principal investigator (PI) for this ESTCP program is the senior corrosion engineer at NAVAIR Jacksonville and thus supported the demonstration. Another stakeholder, Mr. Paul Kenny, the senior NDI engineer at NAVAIR Jacksonville, works with Mr. Benfer on investigating the potential incorporation of IR systems into various NAVAIR process streams.

3.2.2 B-52 & KC-135 Demonstration

Oklahoma City Air Logistics Center (OC-ALC) was selected for further demonstration and validation because ongoing aircraft maintenance activities provided access to a variety of aged aircraft with noted corrosion problems. IML inspections on these aircraft allowed an additional data set for IRRIT inspections on complex surfaces and geometries.

The primary vehicle of interest at OC-ALC was the KC-135. The KC-135 is a focus of this program because of the age of the aircraft (the youngest entered service in 1965). The most notable function of the KC-135 is aerial refueling of other U.S. military aircraft, extending their ranges significantly.

B-52s were an optional platform for the IRRIT Dem/Val as they were processed less often (about 20 per year), and optimal access to IML areas of interest was not guaranteed, but they were still aging aircraft with corrosion problems. (In fact, three B-52s were eventually inspected.) The B-52 Stratofortress was conceived as an intercontinental bomber and was introduced in 1954, with the last delivered in 1962.

KC-135 and B-52 lead maintenance engineers expressed a high degree of interest in the IRRIT technology due to potential labor and maintenance cost savings. Among these stakeholders, Mr. Steve West and Mr. Jeff Catron, senior NDI engineers at OC-ALC, showed interest in the implementation of IR systems and supported the selection of the KC-135 as a target for the Dem/Val. Ms. Hoang Nguyen, the engineer in charge of B-52 maintenance during a risk-reduction visit to OC-ALC, showed interest in IRRIT due to the fact that areas of the B-52 IML are coated with a chromated primer that is facing potential tightening of chromate limits. After the Dem/Val in October of 2006, engineers B. Habib and J. Kalhor of the B-52 Program Office expressed interest in acquiring the IRRIT system and creating a presentation on the applicability of the IRRIT system to the B-52 Program Office.

3.3 TEST FACILITY HISTORY/CHARACTERISTICS

3.3.1 P-3 Demonstration

The facility chosen for the OML Dem/Val was NAVAIR Jacksonville. Since its establishment in 1940, the production shops have maintained almost every type of Navy aircraft—fighter and attack planes, patrol, antisubmarine, reconnaissance, transport, trainer, special configuration, and helicopters. The overall workload has expanded to include the rework of engines, components, and ground support equipment, as well as other support functions vital to the fleet.

Continual change and improvement have characterized the NAVAIR Jacksonville's history. NAVAIR Jacksonville occupies 54 buildings on more than 102 acres, with several offsite locations as well, and returns more than $219 million in payroll to the Jacksonville economic community. The depot is an industrial leader in the region and one of three modern industrial facilities commissioned by the USN to perform in-depth maintenance, repair, overhaul, and modification of fleet aircraft, engines, and aeronautical components.

3.3.2 B-52 & KC-135 Demonstration

The facility chosen for the IML Dem/Val was OC-ALC. Located at Tinker Air Force Base (AFB), OC-ALC was founded in 1941 (as the Oklahoma City Air Material Area, OC-AMA) when the War Department sought to establish an aircraft maintenance depot in the central United States. OC-ALC was soon tasked to repair B-17s and B-24 bombers in World War II, and fitted out B-29 bombers. OC-ALC subsequently supported all major conflicts in which the United States engaged. It was renamed OC-ALC in 1974.

OC-ALC maintains a wide range of aircraft (more than 2,000 in a multitude of models) for all U.S. Armed Services. It is the premier aircraft engine maintenance facility in the DoD, servicing jet engines dating from the Korean War to the most modern stealth aircraft engines and is responsible for managing some 23,000 engines throughout the DoD. Maintenance is not limited to engines—airframe and avionics maintenance are also part of OC-ALC's duties. It is the former, airframe maintenance that requires substantial paint stripping for corrosion detection and thus drives IRRIT interest in OC-ALC.

3.4 PHYSICAL SETUP AND OPERATION

The Dem/Val activities took place at NAVAIR Jacksonville and OC-ALC. Equipment was manually transported to aircraft depot location, utilizing two travel containers. The IRRIT system was set up every day (refer to Final Report Appendix A for the Merlin® camera procedures) and tested/calibrated to ensure that the system was functioning properly prior to use. Calibration involved the use of a 1951 USAF glass slide resolution target coated with epoxy primer (MIL-PRF-85582) and polyurethane topcoat (MIL-PRF-85285). This standard ensured that the IRRIT system was operating and functioning properly. For safety protection purposes (of equipment and personnel), the system had a surge-protected 110V power and GFIC.

The IR Merlin® camera is manufactured and serviced by FLIR/Indigo in Goleta, California. In the unlikely event that the camera was damaged, the camera would have been sent back for repair to FLIR. NGC also had two backup Merlin® cameras and accessories that could have been used to continue the Dem/Val. If the lens of the camera had become dirty or greasy, NGC would clean the lens with isopropyl alcohol (IPA) in accordance with FLIR/Indigo recommended procedure for cleaning the lens.

Operation of the IRRIT system and all Dem/Val activities occurred concurrently with ongoing maintenance activities on a noninterference basis. The dates and duration of each phase for both the OML and IML Dem/Vals are found in the Gantt charts shown in Figures 3 and 4.

Task Name	Start	Finish
Navy P-3 Dem/Val: Outer Mold Line (OML)	**Tue 2/7/06**	**Wed 5/10/06**
P-3 "#912" Wing Section (OML): Visual Inspection (Primer + Topcoat)	Tue 2/7/06	Tue 2/7/06
P-3 "#912" Wing Section (OML): IRRIT Inspection (Primer + Topcoat)	Tue 2/7/06	Tue 2/7/06
P-3 "#912" Wing Section (OML): Visual Inspection (Post Chemical Strip)	Fri 2/10/06	Fri 2/10/06
P-3 "#912" Wing Section (OML): IRRIT Inspection (Post Chemical Strip)	Fri 2/10/06	Fri 2/10/06
P-3 "#912" Wing Section (OML): Visual Inspection (Flash Primer)	Mon 5/8/06	Mon 5/8/06
P-3 "#912" Wing Section (OML): IRRIT Inspection (Flash Primer)	Mon 5/8/06	Mon 5/8/06
P-3 "#912" Fuselage Section (OML): Visual Inspection (Primer + Topcoat)	Tue 2/7/06	Tue 2/7/06
P-3 "#912" Fuselage Section (OML): IRRIT Inspection (Primer + Topcoat)	Tue 2/7/06	Tue 2/7/06
P-3 "#912" Fuselage Section (OML): Visual Inspection (Post Chemical Strip)	Fri 2/10/06	Fri 2/10/06
P-3 "#912" Fuselage Section (OML): IRRIT Inspection (Post Chemical Strip)	Fri 2/10/06	Fri 2/10/06
P-3 "#912" Fuselage Section (OML): Visual Inspection (Flash Primer)	Mon 5/8/06	Mon 5/8/06
P-3 "#912" Fuselage Section (OML): IRRIT Inspection (Flash Primer)	Mon 5/8/06	Mon 5/8/06
P-3 "#772" Wing Section (OML): Visual Inspection (Primer + Topcoat)	Sat 5/6/06	Sat 5/6/06
P-3 "#772" Wing Section (OML): IRRIT Inspection (Primer + Topcoat)	Sat 5/6/06	Sat 5/6/06
P-3 "#772" Wing Section (OML): Visual Inspection (Post Chemical Strip)	Wed 5/10/06	Wed 5/10/06
P-3 "#772" Wing Section (OML): IRRIT Inspection (Post Chemical Strip)	Wed 5/10/06	Wed 5/10/06

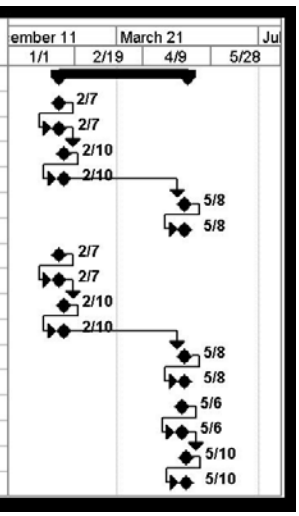

Figure 3. Gantt Chart for Navy P-3 Dem/Val: OML.

Task Name	Start	Finish
USAF KC-135 and B-52 Dem/Val: Inner Mold Line (IML)	**Mon 10/23/06**	**Thu 10/26/06**
KC-135 "#1" Bulkheads (IML): IRRIT Inspection	Mon 10/23/06	Mon 10/23/06
KC-135 "#1" Bulkheads (IML): Spot Strip Localized Areas	Tue 10/24/06	Tue 10/24/06
KC-135 "#1" Bulkheads (IML): Visual Inspection of Localized Areas	Tue 10/24/06	Tue 10/24/06
KC-135 "#2" Bulkheads (IML): IRRIT Inspection	Wed 10/25/06	Wed 10/25/06
KC-135 "#3" Port Wing Spar: IRRIT Inspection	Thu 10/26/06	Thu 10/26/06
B-52 "#1" Bomb Bay Longerons (IML): IRRIT Inspection	Tue 10/24/06	Tue 10/24/06
B-52 "#1" Bomb Bay Longerons (IML): Spot Strip Localized Areas	Wed 10/25/06	Wed 10/25/06
B-52 "#1" Bomb Bay Longerons (IML): Visual Inspection of Localized Areas	Wed 10/25/06	Wed 10/25/06
B-52 "#2" Bomb Bay Longerons (IML): IRRIT Inspection	Wed 10/25/06	Wed 10/25/06
B-52 "#2" Bomb Bay Longerons (IML): Spot Strip Localized Areas	Thu 10/26/06	Thu 10/26/06
B-52 "#2" Bomb Bay Longerons (IML): Visual Inspection of Localized Areas	Thu 10/26/06	Thu 10/26/06

Figure 4. Gantt Chart for USAF KC-135 and B-52 Dem/Val: IML.

3.5 SAMPLING/MONITORING PROCEDURES

1. *Coating thickness inspection*
   The Dem/Val efforts started by measuring the coating thickness variations to ensure that the aircraft met the under-10 mils criteria for the inspection to proceed.

2. *Visual inspection of coated surfaces*
   Visual inspection of the target areas was conducted prior to coating removal by the local corrosion control personnel. This inspection was conducted in accordance with the appropriate manual (e.g., Air Force Manual 01-1-689 and NAVAIR 01-1A-509).

3. *IR corrosion inspection (IRRIT)*
   The Northrop Grumman team was responsible for conducting the IR inspection to find corrosion under the coating. The inspection area was scanned in a regular pattern by a two operator team, with one operator manipulating the camera while the other monitored

the output screen. Anomalies suspected to be corrosion were physically marked on the coating surface using a grease pencil or sticker, and digital photographs were made in the IR and visual range of the suspected corrosion locations.

4. *Aircraft strip/de-paint*
   Aircraft paint removal required chemical stripping so that corrosion was left intact for visual inspection to confirm. Paint stripping was accomplished within the normal maintenance hangars for the respective aircraft. OML inspection stripped the entire plane (as part of normal maintenance procedures) while IML inspections used spot stripping.

5. *Corrosion inspection of stripped aircraft*
   A visual inspection of the stripped area was conducted to identify actual corrosion sites within the wing and fuselage inspection zones. Corrosion sites marked during the initial IR scan and found to be noncorroded (after stripping) was marked as a false positive and numbered. Corrosion sites detected after the stripping, but not found during the initial IR scan under the coating, were fully documented as to location and marked as "missed" or "failed to detect."

6. *Optional postprocessing review*
   After the above steps, IR images and records were sometimes reviewed a second time to verify if the cause of the error was due to the IRRIT operator or the IRRIT hardware. In one postprocessing scenario, the operator simply missed the corrosion, but the hardware found it. In the other scenario, the MWIR camera's auto-gain feature hid the corrosion, which became visible when the contrast and brightness of the image were corrected.

3.6 ANALYTICAL PROCEDURES

An assessment was made comparing the number of corrosion sites identified during the visual inspection of the painted surface with the number of corrosion sites identified with the IR inspection of the painted surface. Results are shown in Section 4.1, Performance Data.

This page left blank intentionally.

4.0 PERFORMANCE ASSESSMENT

4.1 PERFORMANCE DATA

Table 3 illustrates the corrosion sites identified during the Navy OML Dem/Val.

Table 3. Navy P-3 OML Real-Time Results Versus Postprocessing Results.

Navy P-3 Tail #912	Real-Time Results (P-3 OML Wing Section)					
	Prestrip inspection technique	Suspected Areas of Corrosion	False Positives	Misses	Actual Corrosion Sites	% Accuracy
	Visual inspection results	10	1	163	172	5%
	IRRIT inspection results	128	0	44	172	74%
	Postprocessing Results (P-3 OML Wing Section)					
	Prestrip inspection technique	Suspected Areas of Corrosion	False Positives	Misses	Actual Corrosion Sites	% Accuracy
	Visual inspection results	*Visual inspection does not allow for post-processing results.*				
	IRRIT inspection results	135	0	37	172	79%
	Real-Time Results (P-3 OML Fuselage Section)					
	Prestrip inspection technique	Suspected Areas of Corrosion	False Positives	Misses	Actual Corrosion Sites	% Accuracy
	Visual inspection results	5	0	66	71	7%
	IRRIT inspection results	55	0	16	71	77%
	Postprocessing Results (P-3 OML Fuselage Section)					
	Prestrip inspection technique	Suspected Areas of Corrosion	False Positives	Misses	Actual Corrosion Sites	% Accuracy
	Visual inspection results	*Visual inspection does not allow for postprocessing results.*				
	IRRIT inspection results	57	0	14	71	80%
Navy P-3 Tail #772	Real-Time Results (P-3 OML Wing Section)					
	Prestrip inspection technique	Suspected Areas of Corrosion	False Positives	Misses	Actual Corrosion Sites	% Accuracy
	Visual inspection results	27	2	74	99	25%
	IRRIT inspection results	75	0	24	99	76%
	Postprocessing Results (P-3 OML Wing Section)					
	Prestrip inspection technique	Suspected Areas of Corrosion	False Positives	Misses	Actual Corrosion Sites	% Accuracy
	Visual inspection results	*Visual inspection does not allow for postprocessing results.*				
	IRRIT inspection results	85	0	10	99	86%

Note: Postprocessing the results allows the IRRIT user to review the IR images and IR video to identify corrosion locations that may have gone undetected (refer to Table 17) during the real-time inspection, which increases the accuracy of the IRRIT.

Table 4 illustrates the corrosion sites identified during the USAF IML Dem/Val.

Table 4. USAF KC-135 and B-52 IML Real-Time Results.

KC-135 #1	Real-Time Results (KC-135 IML Bulkhead)					
	Prestrip inspection technique	Suspected Areas of Corrosion	False Positives	Misses	Confirmed Corrosion Sites	% Accuracy
	Visual inspection results	*No visual corrosion sites confirmed.*				
	IRRIT inspection results	4	2	*	2	**
KC-135 #2	Real-Time Results (KC-135 IML Cargo Door)					
	Prestrip inspection technique	Suspected Areas of Corrosion	False Positives	Misses	Confirmed Corrosion Sites	% Accuracy
	Visual inspection results	*No visual corrosion sites confirmed.*				
	IRRIT inspection results	1	*Unknown – No selective spot stripping occurred.*			
KC-135 #3	Real-Time Results (KC-135 IML Port Wing Spar)					
	Prestrip inspection technique	Suspected Areas of Corrosion	False Positives	Misses	Confirmed Corrosion Sites	% Accuracy
	Visual inspection results	*NO MEASUREMENTS TAKEN – Purpose of IRRIT inspection was to show capability of the system in tight spaces.*				
	IRRIT inspection results					
B-52 #1	Real-Time Results (B-52 IML Longerons)					
	Prestrip inspection technique	Suspected Areas of Corrosion	False Positives	Misses	Confirmed Corrosion Sites	% Accuracy
	Visual inspection results	*No visual corrosion sites confirmed.*				
	IRRIT inspection results	8	1***	*	7	**
B-52 #2	Real-Time Results (B-52 IML Longerons)					
	Prestrip inspection technique	Suspected Areas of Corrosion	False Positives	Misses	Confirmed Corrosion Sites	% Accuracy
	Visual inspection results	*No visual corrosion sites confirmed.*				
	IRRIT inspection results	2	1***	*	1	**

Notes:
* = Because selective spot stripping occurred (only for locations that were identified by the IRRIT as having corrosion beneath the coating), it is impossible to know if any other corrosion locations were missed.
** = Cannot determine accuracy solely based on spot stripping because it is unknown whether or not corrosion was missed in areas that were not stripped.
*** = Corrosion may have been removed by stripping process; mechanical abrasion may have occurred.

Table 5 illustrates coating systems that were tested with the IRRIT. In general, MWIR (3-5 micrometers) cameras are capable of imaging through typical organic coatings applied to proper military specification thicknesses.

Table 5. Paint and Coating Systems Tested with IRRIT.

Transparency	Type	Specification	Color # (FED-STD-595)	Manufacturer	Part #
IRRIT had success with this coating when applied up to 2-3 times proper military specification	Pretreatment – chemical conversion coating	MIL-C-81706 Class 1A	Not applicable	Turco Alumigold or Alodine 600	
	Corrosion preventative compound (CPC)	BMS 3-35	Not applicable	Zip-Chem	Cor-Ban 35
	Epoxy primer	MIL-P-23377 Type I, High Solids	Not applicable	Deft	02-Y-40A
		MIL-P-85582 Type I, Class C1	Not applicable	Deft	44-GN-7
		MIL-P-85582 Type I, Class N (Candidate)	Not applicable	Deft	44-GN-098
		MIL-P-85582 Type I, Class C2	Not applicable	Deft	44-GN-072
		TT-P-2760 Type I, Class C	Not applicable	Deft	09-Y-002
	Solvent-borne epoxy primer	MIL-P-23377 Type I, Class C	Not applicable	PRC DeSoto	EEAY051A
	Polyurethane topcoat	MIL-PRF-85285 Type I	Gloss Gray 16440	Hentzen	04644AUX-3
	Polyurethane topcoat	MIL-PRF-85285 Type I	Gloss White 17925	Deft	03-W-127A
	High solids polyurethane topcoat	MIL-PRF-85285 Type I	Flat Gray 36293	Deft	03-GY-322
	High solids epoxy primer	BMS 10-79	Not applicable	Akzo Nobel	10P20-44 NSN: AD32-47-300-0354
	Polyurethane topcoat	BAMS565-09 Type I, Class A Grade B	Coast Guard Gloss White	Akzo Nobel	Eclipse ECL-G-46 NSN: AD32-47-300-0446
	Polyurethane topcoat	BMS 10-79	Coast Guard Gloss Orange	Akzo Nobel	Eclipse ECL-G-6615 NSN: AD32-47-300-3655
	Fluid resistant epoxy topcoat	MIL-PRF-22750	Gloss White 17925	Deft	01-W-081
	Fuel tank coating	AMS-C-27725	Not applicable	PRC DeSoto	825X309
IRRIT had success only when this coating applied to proper military specification thickness	APC polyurethane topcoat	MIL-PRF-85285 Type I	Flat Gray 36173	Deft	99-GY-001
			Flat Gray 36118	Deft	99-GY-13
			Flat Gray 36375	Deft	99-GY-003
			Gloss White 17925	Deft	99-GY-009
IRRIT had no success imaging through coating	Epoxy primer	MIL-P-53022B Type I	Not applicable	Sherwin Williams	E90W201/V93V202
	CARC polyurethane topcoat	MIL-C-46168 Type IV	Flat Green 34094	Sherwin Williams	F93G27/V93V20
			Flat Black 37030	Sherwin Williams	
		MIL-C-53039A	Flat Green 34094	Sherwin Williams	F93G104
			Flat Black 37030	Sherwin Williams	F93B102
		MIL-C-64159 Type II	Flat Green 34094	Sherwin Williams	F93G504/V93V502
			Flat Black 37030	Sherwin Williams	F93B505/V93V502
	Low IR epoxy primer	MIL-P-85582 Type II, Class C2	Not applicable	Deft	44-GN-76
	Low density epoxy primer	MIL-P-85582 Type I, Class C2	Not applicable	Deft	44-GN-36
	Polysulfide sealant	MIL-S-81733 Type III	Not applicable	PRC DeSoto	

4.1.1 Scan Rates

During the P-3 IRRIT inspections, the average scan rate was 127 ft²/hour. The Dem/Val process showed a scan rate improvement as the experience in IRRIT operation and procedures were gained. The scan rate is likely lower than in field operations as the Dem/Val process required extensive documentation. (Each suspected corrosion site was photographed and documented in both the IR and visual ranges). Typical field operation of the IRRIT inspection would not require such documentation. As a result, the scan rate in the Dem/Val activities was likely lower than will be seen in field operation of IRRIT.

The average scan rate for the USAF KC-135 and B-52 IML Dem/Val activities was 132 ft²/hour. Again, this was slowed by a level of documentation (and errors) that is likely higher than would be seen in field service.

4.1.2 Results Summary

Figure 5 illustrates the high level of accuracy of the IRRIT inspection method as compared to the visual inspection method during the Navy P-3 OML Dem/Val. The IRRIT inspection identified three times (3X) the amount of corrosion located by visual inspection. The IRRIT as compared to the visual inspection method allows for postprocessing the images after the inspection, which identifies corrosion that may have gone unnoticed during the real-time inspection. The reasons corrosion may have gone undetected by the IRRIT can be found in Section 6.2, Performance Observations.

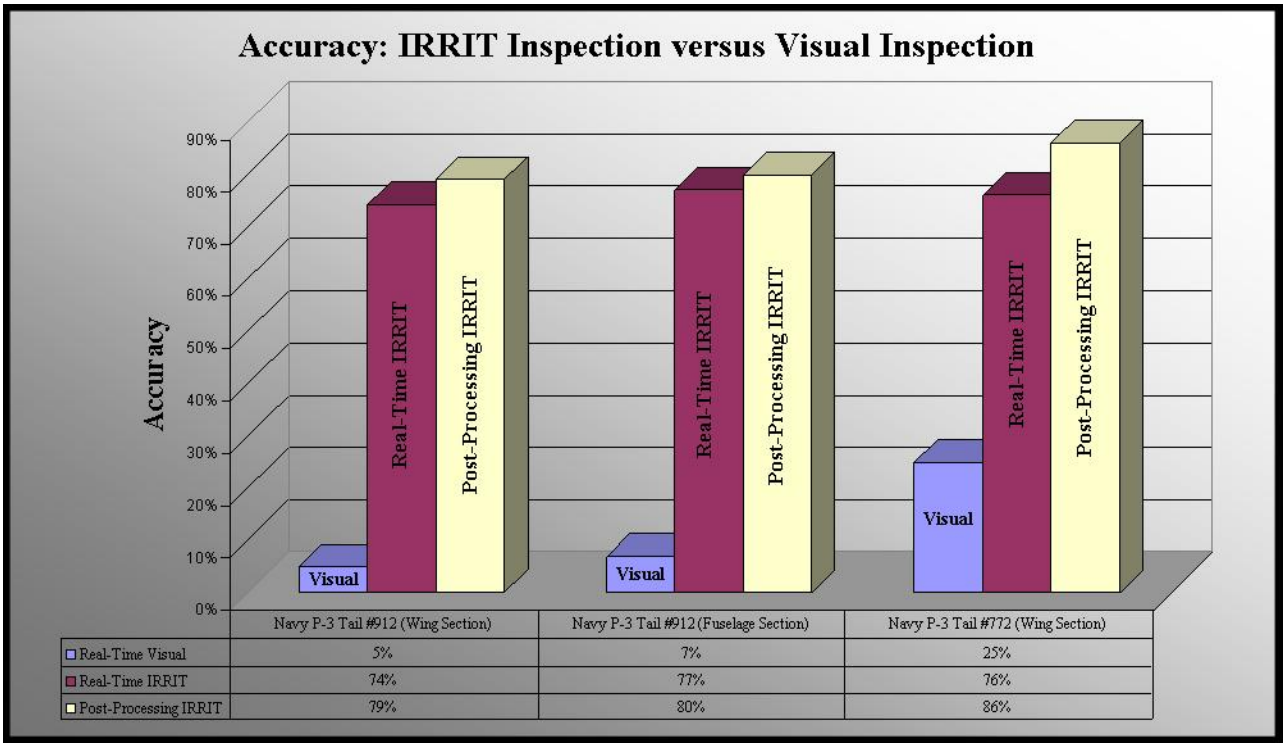

Figure 5. Summary of IRRIT and Visual Inspection Results on P-3 OMLs.

Overall, IRRIT obtained 70-80% accuracy during demonstrations, which is significantly higher than the 5-25% accuracy of the visual inspection method.

4.2 PERFORMANCE CRITERIA AND DATA EVALUATION

An overview of the performance criteria and results of the testing are presented in Table 6.

Table 6. Expected Performance and Performance Confirmation Methods.

Performance Criteria	Expected Performance Metric	Performance Confirmation Method	Actual Performance
PRIMARY CRITERIA (Performance Objectives) (Quantitative)			
Product testing	Corrosion detection equal to or better than the visual inspection currently utilized after stripping coatings	Visual records	Corrosion detection better than visual inspection
Factors affecting performance (Pollution Prevention) • Temperature of A/C • Coating thickness • Chemical composition of coating	Acceptance criteria: Range 32-100° F Not to exceed 10 mils Mil-Spec epoxy and urethane-based	Projected by calculation and measurement	All factors within acceptance criteria range, no negative impact of IRRIT imaging
Hazardous materials	No hazardous waste introduced by this technology	Operating experience	No hazardous waste introduced by this technology
Process waste	No process waste introduced by this technology	Operating experience	No process waste introduced by this technology
SECONDARY PERFORMANCE CRITERIA (Qualitative)			
Ease of use	Minimal operator training required – about 4 hours. Inspectors who normally do visual inspections for corrosion can use this system.	Operating experience	Rapid acquisition of IRRIT images performed by field engineers and technicians
Reliability	Manufacturer expects at least 8,000 hours use before breakdown. No expected breakdown during Dem/Val.	Record keeping	No reliability issues
Versatility	The IRRIT and blackbody (BB) techniques are ideally suited to any platforms (besides P-3) that have coating systems transparent in the 3-5 micron range. Besides large areas, additional optics can be employed to inspect parts for pits, fractures, part ID obscured visibly by the coating.	Operating experience/ assessments	BB not suitable for aircraft inspection
Maintenance	Setup, operating, and breakdown procedures can be designed for easy operation. There is minimal maintenance required for the camera.	Operating experience/ assessments	Minor maintenance required for COTS data cables
Scale-up constraints	Depending on the number of cameras employed, an entire aircraft or selected area can be recorded for future comparisons. Corrosion-prone areas of the aircraft will be inspected first to determine whether or not the balance of the aircraft needs to be inspected. Other equipment will be required to scan the entire structure. Scaffolding will allow access to higher areas. Robotics may also be needed for highly automated scanning.	Operating experience/ assessments	No scale-up constraints

This page left blank intentionally.

5.0 COST ASSESSMENT

Potential economic and environmental savings from use of the IRRIT arise largely from the opportunity to reduce coating removal and repaint activities. However, it should be emphasized that the IRRIT is an inspection tool that may identify reduction opportunities but does not change the extent of corrosion on an aircraft or the performance of its coating system. The primary function of the IRRIT is to increase user knowledge of the real condition of the substrate, enabling engineering disposition to occur with greater confidence.

This analysis examines the potential impact of IRRIT use on maintenance of the OML of medium-size aircraft, using the Navy P-3 as baseline. One cost analysis scenario for the IRRIT is a transition to condition-based maintenance, where aircraft are assessed and treated according to the extent of actual corrosion present. Another scenario considered is weapon system managers using increased confidence from the IRRIT to extend the maintenance interval between strips and repaints.

The potential impact of the IRRIT on IML maintenance work is difficult to quantify due to the lack of regular strip and repaint activity on most aircraft IML areas. Accordingly, this cost assessment will focus heavily on OML maintenance work. Potential use of the IRRIT on IML areas will be discussed in Section 5.2.4, Inner Mold Line Costs and Savings.

5.1 COST REPORTING

An economic analysis was conducted using the Environmental Cost Analysis Methodology (ECAM™) cost estimating tool, comparing the full strip chemical depainting process of aircraft used on the P-3 aircraft as baseline to the purchase and use of an IRRIT system.

5.1.1 Baseline Maintenance Procedure

Currently, P-3 aircraft undergo paint strip, corrosion treatment, and repaint at NAVAIR Jacksonville every four years. Approximately 25 P-3 aircraft are processed in this manner each year.

5.1.2 Alternative Scenario Description: Condition-Based Maintenance

With condition-based maintenance, it is assumed that when an aircraft enters the facility for maintenance, the IRRIT system is used to inspect and assess the actual amount of OML corrosion present. This inspection would occur during nonactive wait time, not affecting overall process flow. One of several options would be ordered based on the results of IRRIT inspection.

The options include **Full Strip**, used when more than 30% of the aircraft shows signs of corrosion. It is the same as the baseline, with the addition of an inspection. **Scuff/Sand/Overcoat**, used for relatively minor corrosion over less than 30% of the aircraft, applies only where corroded areas are scuffed, sanded, and corrosion treated. **Selected Strip** is used for heavy corrosion that is limited to less than 30% of the surface area. Only the heavily corroded areas of the aircraft are stripped, and **Spot Repair** is used for minor corrosion (at individual locations where corrosion is detected [less than 15% surface area] and treated).

The percentage of aircraft that would pass through by each of the alternative maintenance procedures was estimated based on historical data for H-53 condition-based maintenance. Data for the H-53 was used as the H-53 is deployed in environments as harsh as or harsher than the P-3. Estimates are: **Full Strip** – 50% (average 12.5 aircraft/year out of the yearly population of 25); **Scuff/Sand/Overcoat** – 40% (average 10 aircraft/year); **Selected Strip** – 5% (average 1.25 aircraft/year); **Spot Repair** – 5% (average 1.25 aircraft/year).

5.1.3 Maintenance Cycle Extension Scenario

It is assumed that the only change to the baseline maintenance activities under this scenario will be IRRIT system utilization to collect data that justifies extending the maintenance cycle (i.e., 100% removal of the topcoat) from four years by 1, 2, 3, or 4-year periods. Throughput quantities for the interval shifts were estimated by dividing the current maintenance interval by the new maintenance interval and multiplying the result by 25 (current aircraft per year). The total number of aircraft to be serviced each year under a revised maintenance interval is estimated as follows: **Baseline** (4 year interval): 25 aircraft/year; **+1 year:** 20 aircraft/year; **+2 years:** 17 aircraft/year; **+3 years:** 15 aircraft/year; **+4 years:** 13 aircraft/year.

5.2 COST ANALYSIS

Cost data that was used for this economic analysis was accumulated throughout the Dem/Val of the P-3 at NAVAIR Jacksonville with cooperation from site personnel. There was no significant demonstration cost incurred at the Dem/Val sites because the IRRIT system did not alter the baseline process for the aircraft surveyed and work was conducted on a noninterference basis around the maintenance schedule.

The cost categories considered for the baseline process were labor, materials, utilities, and environmental, health, and safety (EHS) costs. Sources of information and breakdown of costs and quantities are provided in the Final Report but are excluded here for reasons of space. Table 7 presents the total baseline costs and environmental emissions of an aircraft strip and repaint on a per aircraft basis for a yearly throughput of 25 aircraft per year (based on P-3 data).

Table 7. Baseline Costs per Year.

Category	Baseline (per aircraft)	Baseline (25 P-3/year)
Labor	$85,397	$2,134,925*
Materials	$21,233	$530,829*
Utilities	$144	$3,600
EHS	$22,791	$569,774*
TOTAL	$129,565*	$3,239,128*
VOC release	3,423 lb VOC	85,577* lb
Total chromates used	24 lb	600 lb
Total hazardous waste	11,273 lb	281,825 lb

*Note that quantities were calculated to four decimal places but in this table have been rounded to the nearest whole number. This may result in slight discrepancies in sums.

5.2.1 Condition-Based Maintenance Scenario Cost Analysis

A condition-based maintenance scenario would cause each P-3 aircraft to undergo one of four alternate maintenance options, each with varying cost per aircraft. In addition, purchase of an IRRIT system will incur a capital cost. The capital cost of condition-based maintenance is calculated as requiring purchase of two IRRIT systems, based on the required inspection area and estimated inspection rate. The capital and equipment maintenance costs for the two IRRIT systems estimated as required for conducting condition-based maintenance are presented below. More detail and explanation is provided in the Final Report.

Capital Costs
IRRIT camera systems (2): $175,200 (single system $87,600)
Training: $17,090 ($15,000 MWIR training plus 32 training hours at $65/hour)

Annually Reoccurring Cost
Camera maintenance: $17,520/year (calculated as 10% of camera costs)

Table 8 summarizes the cost per aircraft of each of the condition-based maintenance alternatives. Note that 33 hours allocated to inspect each aircraft with IRRIT is included in the labor cost. Table 9 presents the total cost per aircraft and assumes a rate of 25 aircraft/year. Table 10 summarizes costs from Tables 8 and 9.

Table 8. Cost per Aircraft of Condition-Based Maintenance.

Category	Full Strip Cost/Aircraft	Scuff/Sand Cost/Aircraft	Selected Strip Cost/Aircraft	Spot Strip Cost/Aircraft
Labor	$87,509	$57,006	$62,897	$14,355
Materials	$21,233	$11,671	$11,671	$3,035
Utilities	$144	$144	$144	$144
EHS	$22,791	$3,111	$15,618	$936
Total	**$131,678**	**$71,933***	**$90,330***	**$18,470**

*Note that quantities were calculated to four decimal places but in table have been rounded to the nearest whole number. This may result in slight discrepancies in sums.

Table 9. Total Procedure Costs.

Category	Full Strip Cost/Aircraft	Scuff/Sand Cost/Aircraft	Selected Strip Cost/Aircraft	Spot Strip Cost/Aircraft
Total (labor, materials, utilities, eHS)	$131,678	$71,933*	$90,330*	$18,470
Aircraft per year	25			
Cost if all 25 aircraft were treated with procedure	**$3,291,950***	**$1,798,325***	**$2,258,250***	**$461,750***
Percentage of aircraft/year	50%	40%	5%	5%
Cost per year	**$1,645,971***	**$719,330***	**$112,913***	**$23,087***

*Note that quantities were calculated to four decimal places but in table have been rounded to the nearest whole number. This may result in slight discrepancies in sums.

Table 10. Capital and Annual Cost of Condition-Based Maintenance.

Category	Quantity
Capital Costs	
Equipment cost	$175,200
Training cost	$17,080
Total Capital cost	**$192,290**
Annual Costs	
Full strip	$1,645,971
Scuff/sand	$719,331
Selected strip	$112,913
Spot strip	$23,087
Equipment maintenance	$17,520
Total condition-based maintenance annual costs	**$2,518,822**

The baseline maintenance cost per year is $3,239,128 (see Table 7), and the condition-based maintenance cost per year is estimated at $2,518,822 (see Table 10), making the estimated annual savings of condition-based maintenance $720,306. This results in a simple payback period of 0.27 years for the condition-based maintenance capital cost of $192,290. Table 11 projects the anticipated EHS emissions estimated for condition-based maintenance compared to the baseline process.

Table 11. Baseline Versus Condition-Based VOC Emissions.

Category	Baseline/Year	Condition-Based/Year	Estimated Annual Savings
VOC	90,407 lb	47,146 lb	38,431 lb
Hexavalent chromium use	600 lb	575 lb	25 lb
Hazardous waste	281,825 lb	185,323 lb	96,502 lb

5.2.2 Maintenance Cycle Extension Scenario Cost Analysis

The only additional costs to the baseline anticipated in maintenance cycle extension are those associated with the purchase and use of one IRRIT camera system as an evaluation tool. Multiple cameras are not required, and labor for inspections is not considered since it is assumed that time spent gathering data with the IRRIT system would be equivalent to the visual inspection that would be performed if the IRRIT was unavailable. Table 12 illustrates the capital costs and yearly operating costs of the baseline compared to potential maintenance cycle extensions created through use of the IRRIT system.

Table 12. Maintenance Cycle Extension Cost Comparison.

	Baseline (25 aircraft/year)	+1 Year (20 aircraft/year)	+2 Year (17 aircraft /year)	+3 Year (15 aircraft/year)	+4 Year (13 aircraft/year)
Equipment	$0	$87,600	$87,600	$87,600	$87,600
Training	$0	$17,080	$17,080	$17,080	$17,080
Annual costs	$3,239,128*	$2,600,063	$2,211,367	$1,952,237	$1,693,107
Annual savings	N/A	$639,066	$1,027,761	$1,286,891	$1,546,022
VOC	85,577 lb*	68,461 lb	58,192 lb	51,346 lb	44,500 lb
Hexavalent chromium	600 lb	480 lb	408 lb	360 lb	312 lb
Total hazardous waste	281,825 lb	225,460 lb	191,641 lb	169,095 lb	146,549 lb

*Note that quantities were calculated to four decimal places but in table have been rounded to the nearest whole number. This may result in slight discrepancies in sums.

Table 13 presents the estimated simple payback and the annual environmental savings if IRRIT use allows an interval shift.

Table 13. Maintenance Cycle Extension Payback Period and EHS Savings.

	+1 Years	+2 Years	+3 Years	+4 Years
Simple payback	0.16 yr	0.10 yr	0.08 yr	0.07 yr
Annual VOC savings	17,115 lb	27,384 lb	34,231 lb	41,077 lb
Annual hexavalent chromium use reduction	120 lb	192 lb	240 lb	288 lb
Annual hazardous waste savings	56,365 lb	90,184 lb	112,730 lb	135,276 lb

5.2.3 Life-Cycle Cost Analysis

In addition, a life-cycle cost analysis was carried out on the IRRIT system for the condition-based maintenance alternative and interval shift alternative. Note that the maintenance interval extension analysis will hold true only for weapon systems where the actual condition of the Fleet, as revealed by IRRIT inspection, allows an interval shift. Per ESTCP guidance for weapon systems and platforms technology, this has been shortened to a 15-year life-cycle (in Tables 14 and 15.)

Table 14. 15-Year Life-Cycle Costs.

Alternative	Capital Cost	Annual Cost	Life-Cycle Cost	Life-Cycle Cost Savings
Baseline	$0	$3,239,128	$48,586,920	-
Condition-based maintenance	$192,290	$2,518,822	$37,782,330	$10,804,590
+1 Year interval	$104,680	$2,600,063	$39,000,942	$9,585,985
+2 Year interval	$104,680	$2,211,367	$33,170,511	$15,416,417
+3 Year interval	$104,680	$1,952,237	$29,283,556	$19,303,371
+4 Year interval	$104,680	$1,693,107	$25,396,602	$23,190,325

Three performance measures were considered in the ECAM evaluation: payback period, net present value (NPV), and internal rate of return (IRR). NPV and IRR account for the time value of money and discount the future capital investments or annual cost benefits to the current year. For NPV and IRR, a 15-year life cycle and 2.9% discount rate were used based on current Office of Management and Budget estimates.

Table 15. 15-Year Life-Cycle Performance Measures.

Alternative	NPV at 15 Years	IRR At 15 Years	Discounted Payback Period
Condition-based maintenance	$8,469,204	374 %	0.27 yr
+1 Year interval	$7,579,912	611 %	0.17 yr
+2 Year interval	$12,253,774	982 %	0.10 yr
+3 Year interval	$15,369,853	1230 %	0.08 yr
+4 Year interval	$18,485,825	1477 %	0.07 yr

5.2.4 Inner Mold Line Costs and Savings

IML surface areas on surveyed aircraft were spot stripped on an irregular basis. There was no standardized baseline process that could be used for purposes of comparison. However, there are environmental benefits by employing IRRIT on IML. The fact that IML surfaces are not stripped on a regular maintenance cycle means that, if the weapons system engineer desires to inspect surfaces for potential corrosion, a costly one-time stripping order must be issued for the IML on one or more aircraft. Potentially, use of the IRRIT could eliminate these “inspection strips” entirely.

To estimate the impact of eliminating a one-time inspection, the recently completed B-52 longeron one-time inspection is used as a baseline. During the one-time inspection, these areas were stripped by plastic media blast (PMB), inspected, corrosion treated, primed, and topcoated. These longerons and the surrounding areas cover about 400 sq ft of area. Approximately 20 B-52 aircraft pass through OC-ALC each year. Using assumptions detailed in the Final Report, it is estimated that nearly 40 lb of VOC emissions and more than 4 lb of hexavalent chromium use per year could be eliminated by utilizing IRRIT to replace this one-time inspection. In addition, considerable cost savings (not estimated) could be realized by avoiding the labor and equipment requirements of PMB for a chromated primer surface on an aircraft interior.

5.2.5 Cost Analysis Summary

As can be seen, use of the IRRIT system shows an extremely favorable payback period in the alternative scenarios as well as substantial pollution-prevention savings. Under all OML scenarios considered, the payback period never exceeds 0.3 years. Complete strip and repaint of an aircraft is an expensive process in terms of labor, material, and EHS emissions. The value of deferring the strip and repaint of a single aircraft OML equal or greater in size than the P-3 is greater than the cost of a single IRRIT camera system.

As stated, however, these potential benefits are solely dependent on providing weapon system managers with sufficient increased confidence to alter the maintenance procedure/cycle. Only if there is agreement that the IRRIT can be used to substantially alter a weapons system's current maintenance procedure/cycle should purchase of the IRRIT be recommended for a particular weapon system.

These maintenance scenarios are considered as generic examples of a potential IRRIT impact on a wide range of DoD aircraft OML applications. When applied to aircraft of equal or greater size to the P-3, cost savings are likely to be in the same range as those based on the P-3 baseline because of the labor reduction from having to process less aircraft surface area per year. Most of the pollution prevention savings come from a reduction in chemical stripping. For aircraft where stripping is accomplished by PMB, as opposed to chemical stripping, pollution prevention savings may not be as extensive. There will be less labor and pollution prevention savings for smaller aircraft. However, in the case of condition-based maintenance, fewer IRRIT systems will be required for a smaller surface area, resulting in less of a capital cost to payback and a lower inspection labor per aircraft processed.

This page left blank intentionally.

6.0 IMPLEMENTATION ISSUES

6.1 COST OBSERVATIONS

Table 16 provides details of the cost estimates used previously in Section 5.2.1, Condition-Based Maintenance Scenario Cost Analysis (where two cameras were assumed) covering the capital, training, and maintenance costs associated with implementing a single IRRIT camera system. Training costs are based on the assumed labor rate of $65 per hour for the trainees, with four personnel being trained on one system. As production increases (such as the MilCam Recon MWIR camera), equipment costs may decline in coming years.

Table 16. Single IRRIT System Cost.

Category	Quantity	Units	Source Of Assumptions
Training Costs (Capital Cost)			
Number of personnel to train on system	4	persons	Per J. Benfer, NAVAIR Jacksonville strip shop
Hours required for initial training	8	hr/person	Estimated by Northrop Grumman
Total training labor	32	hr/camera system	Calculated
Training labor cost	$2,080	$/training session	Calculated at labor rate of $65/hr
Cost to supply training	$15,000	$/training	Estimated by Northrop Grumman
Subtotal (training)	**$17,080**	**$/training**	**Calculated**
IRRIT Equipment Cost (Capital Cost)			
Camera, filter, lenses	$64,000	$/system	Northrop Grumman
Software	$5,000	$/system	Northrop Grumman
Laptop computer	$5,000	$/system	Northrop Grumman
Illumination System	$1,000	$/system	Northrop Grumman
Camera tripod head	$100	$/tripod	Northrop Grumman
Camera vest/backpack	$2,100	$/vest	Northrop Grumman
Heads-up display eyeglasses	$2,000	$/glasses	Northrop Grumman
LCD small display	$400	$/LCD	Northrop Grumman
Data transfer cables (set)	$8,000	$/set	Northrop Grumman
Subtotal (equipment)	**$87,600**	**$/camera system**	**Calculated**
Equipment Maintenance Costs (Annually Reoccurring Cost)			
Maintenance costs	**$8,760**	**$/year**	**Engineering estimate based on 10% of capital cost ($87,000); agreed upon by Northrop Grumman**

As shown in the cost analysis, the cost of a single IRRIT system is small compared to the cost of completely stripping and repainting a medium-sized aircraft such as the P-3. The largest cost component of a strip and repaint operation is labor. To accommodate the various labor and shop rates and to avoid the possibility of double-counting costs for items such as materials and utilities, an estimated value of $65 per hour was used that would include salary and benefits but exclude material and utility costs already accounted for in other data collection efforts. Using higher labor rates will result in higher costs of strip and repaint operations as well as a higher cost to use the IRRIT to inspect aircraft.

6.2 PERFORMANCE OBSERVATIONS

The required performance metric of the IRRIT system was to have corrosion detection capabilities equal to or better than current visual inspection methods. The results of the Dem/Val concluded that the IRRIT method of corrosion inspection is significantly more accurate than the visual corrosion inspection method (see Section 4.1.2, Results Summary). The IRRIT located on average 70-80% of the actual corrosion real time, whereas the visual inspection located on average approximately 5-25%. Tables 4 and 5 summarize the Dem/Val results.

It was noted during Dem/Val that the type and size of corrosion (filiform, general corrosion, etc.) was not a contributing factor in IRRIT inspection error. Postprocessing the IRRIT data to understand demonstration inspection error identified several contributing factors that may have occurred during the Dem/Val process (see Table 17).

Table 17. Inspection Error Contributing Factors—OML.

Error	Type of Error	Description
#1	Operator error	IRRIT operator missed the corrosion location, but after reviewing IR images or IR video, it was determined that the system actually picked it up.
#2	Operator error	IRRIT operator missed the corrosion location due to MWIR camera auto-gain issue (refer to Final Report, Appendix E.8, Investigation to Correct Auto-Gain Image Issue), which was later corrected during postprocessing.
#3	Operator error	IRRIT operator did not scan the inspection zone completely—and since the zone was not scanned via the IRRIT, it would have been impossible to identify the corrosion.
#4	System failure	IRRIT system could not detect corrosion through coating system. This option did not occur during the Navy P-3 OML Dem/Val.
#5	Operator and system failure	False positive—Location incorrectly identified as corrosion through coating.

In general, the KC-135s and B-52s did not produce a large number of corrosion locations, and of those found, some were either false positives or superficial corrosion that was removed during the stripping process. Table 18 summarizes the errors noted during IML inspections.

Table 18. Inspection Error Contributing Factors—IML.

Error	Type of Error/Failure	Description
#1	Operator and system failure	False positive—Location incorrectly identified as corrosion through coating. In the case of the KC-135, the false positive was due to surface contamination (refer to Final Report, Figure 4-6.)
#2	Dem/Val procedural error	Location identified (by IRRIT) as corrosion could not be validated during post strip analysis. In the case of the B-52, the coating removal process included mechanical measures, which may have resulted in inadvertently removing corrosion product(s) (refer to Final Report, Tables 4-9.)

In theory, if the IRRIT user spends a lot of time scanning and doing the real-time inspection, the level of accuracy should be close to 100%. However, due to the time constraints of production and other reasons, a level of 70-80% accuracy was obtained with the IRRIT, which is still significantly higher than the 5-25% accuracy of the visual inspection method.

6.3 SCALE-UP

The demonstrations were conducted with a fully functional IRRIT system. Thus, no performance-related scale-up issues are present. More compact or advanced cameras may alter pricing somewhat.

6.4 OTHER SIGNIFICANT OBSERVATIONS

Cost of this technology will affect implementation at organizational-level sites. Rather, it would be more appropriate for program office or depot-level purchases with dual use for field applications. A program element line should be established to fund and develop this technology across the Joint Services. A possible avenue is through the Corrosion Steering Group (CSG) of the Joint Council on Aging Aircraft (JCAA).

6.5 LESSONS LEARNED

To minimize inspection error, IRRIT users should be familiar with weapon system inspection requirements and the engineering disposition of identified defects. In addition, not all coatings—particularly ground vehicles' CARC—were suitable for IRRIT. A preliminary screening test of a platform is recommended.

Utilizing the auto-gain function of the monitor used to display IRRIT imaging tends to favor bright surfaces (defined as reworked material, cadmium-plated fasteners, and any other highly IR-reflective surface), resulting in darkening of surrounding areas, which may hide defects. By manually adjusting the contrast and brightness on the monitor, darkened areas will become bright (the original bright surface also becomes brighter). This results in successfully detecting any corrosion or other defects that might have been missed if no changes are made on the monitor and is another way in which operator experience will influence results.

Based on the IML Dem/Val results, future IRRIT inspections will require the removal (dry-wiping) prior to inspection of surface contamination known to be problematic in IR (dirt, dust, oil, grease, etc.).

6.6 END-USER/ORIGINAL EQUIPMENT MANUFACTURER ISSUES

End users for the IRRIT system consist of in-service depot-level maintainers of fielded weapon systems and their associated support equipment within the sustainment community. End users include inspectors, quality assurance specialists, and engineers within applicable maintenance and engineering departments of the DoD. IRRIT system usage depends on several process functions related to the specific requirements of the end user. For inspectors, usage is targeted towards a conditional-based assessment of weapon system repair requirements, while quality assurance specialists may utilize the IRRIT system as a tool for process verification and monitoring of corrosion control program effectiveness. Engineering departments can utilize the

IRRIT system for program related logistical support functions associated with corrosion, paint, and wash-cycle interval evaluations, or reliability centered maintenance (RCM) events. Stakeholders within these groups have already supplied letters of endorsement (see Final Report, Appendix G) for the IRRIT system.

The IRRIT is a combination of COTS commercial sources and an NGC shop-built mounting system. The camera mounting system will also be a combination of COTS components with shop-built adapters. The major components are therefore COTS with minor components custom-built for test purposes. No design/fabrication problems are anticipated during later commercialization. Due to the use of a COTS MWIR camera, other support equipment is required (e.g., separate screens, illuminators, and data storage) for the functionality to image through coatings. Advancing state-of-the-art in MWIR cameras can make this system substantially more compact.

6.7 APPROACH TO REGULATORY COMPLIANCE AND ACCEPTANCE

No additional licensing or regulatory requirements are needed to operate or implement the IRRIT technology beyond those of a typical maintenance-environment end user (e.g., workplace safety requirements.)

7.0 REFERENCES

1. Strategic Environmental Research and Development Program (SERDP). *Final Report, Non-Destructive Testing of Corrosion Under Coatings,* Project Number 1137. September 1, 2004.

2. Environmental Security Technology Certification Program (ESTCP). *Guidance for Pollution Prevention Projects*. April 2004.

3. Environmental Security Technology Certification Program (ESTCP). *Navy P-3 OML Demonstration/Validation Plan,* Project Number WP-0407. December 14, 2005.

4. Environmental Security Technology Certification Program (ESTCP). *USAF KC-135 and B-52 IML Demonstration/Validation Plan,* Project Number WP-0407. August 10, 2006.

5. National Defense Center for Environmental Excellence (NDCEE). *Environmental Cost Analysis Methodology (ECAM) Handbook,* March 29, 1999. http://www.estcp.org.

6. Indigo MWIR Merlin® Camera Manual.

7. OPNAVINST 5100.23F Navy Occupational Safety and Health (NAVOSH) Program Manual. July 15, 2002.

8. NAVAIR Jacksonville, Florida – Local Process Specification (LPS) 650.

9. NAVAIR Jacksonville, Florida – Local Process Specification (LPS) 250.

10. United States Patent 7,164,146—System for Detecting Structural Defects and Features Utilizing Blackbody Self-Illumination.

11. United States Patent 7,193,215—System and Method for Imaging of Coated Substrates.

12. United States Patent Application 20060289766—Spectral Filter System for Infrared Imaging of Substrates Through Coatings.

13. Environmental Security Technology Certification Program (ESTCP). *Infrared Reflectance Imaging for Environmentally Friendly Corrosion Inspection Through Organic Coatings Final Report,* Project Number WP-0407. April 12, 2007.

This page left blank intentionally.

APPENDIX A

POINTS OF CONTACT

Point of Contact	Organization	Phone/Email	Role in Project
Allen, David	ASM Management	Phone: 478-335-3316 E-mail: dallen3@netscape.com	Technical Consultant/ Quality Assurance Officer
Benavides, Sam	USCG	Phone: 252-335-6123 E-mail: sbenavides@arsc.uscg.mil	USCG Materials Engineer/Corrosion
Benfer, Jack	NAVAIR Jacksonville	Phone: 904-542-4516, Ext. 153 E-mail: john.benfer@navy.mil	Senior Corrosion Engineer, ESTCP Principal Investigator
Campbell, Matthew	CTC	Phone: 412-992-5382 E-mail: campbell@ctc.com	ESTCP Program Manager
Cargill, Steve	CTC	Phone: 772-546-7718 E-mail: cargill2@comcast.net	NDI Expert
Chu, Steve	NGC	Phone: 516-346-9285 E-mail: steven.chu@ngc.com	Technical Support
Cowherd, Tom	NAVAIR Jacksonville	Phone: 904-317-2037 E-mail: thomas.cowherd@navy.mil	Environmental Cost Support
Davis, Carvel	Tinker AFB	Phone: 405-736-5020 E-mail: carvel.davis@tinker.af.mil	NDI Expert
DiMarzio, Don	NGC	Phone: 516-575-6452 E-mail: donald.dimarzio@ngc.com	Spectral NDI Principal Investigator
Fonneland, Nils	NGC	Phone: 516-346-2893 E-mail: nils.fonneland@ngc.com	Technical Support
Gintert, Larry	CTC	Phone: 727-549-7092 E-mail: gintert1@ctc.com	Special Army Consultant
Habib, Bernie	Tinker AFB	Phone: 405-736-5686 E-mail: bernie.habib@tinker.af.mil	B-52 Engineer
Hanson, Mike	USCG	Phone: 252-335-6451 E-mail: mhanson@arsc.uscg.mil	USCG Manager
Kalhor, Justin	Tinker AFB	Phone: 405-736-5401 E-mail: justin.kalhor@tinker.af.mil	B-52 Engineer
Kenny, Paul	NAVAIR Jacksonville	Phone: 904-542-4521, Ext. 138 E-mail: paul.kenny@navy.mil	Senior NDI Engineer
Kelley, Jack	ARL	Phone: 410-306-0837 E-mail: jkelley@arl.army.mil	Army Materials Engineer
Leyble, Dennis	NGC	Phone: 516-346-7403 E-mail: dennis.leyble@ngc.com	Technical Support
Marlowe, Dan	NAVAIR Jacksonville	Phone: 904-545-5407, Ext. 154 E-mail: daniel.marlowe@navy.mil	P-3 Field Support Team (FST) Engineering
McPherson, Scott	CTC	Phone: 904-722-2503 E-mail: mcpherso@ctc.com	Cost Benefit Analysis
Miller, Mike	CTC	Phone: 727-549-7285 E-mail: millermi@ctc.com	Technical Support
Pollock, Brian	AFRL/MLSC	Phone: 937-255-0498 E-mail: brian.pollock@wpafb.af.mil	ESTCP IRRIT Program Liaison
Rowten, Ryan	Tinker AFB	Phone: 405-736-5020 E-mail: ryan.rowten@tinker.af.mil	NDI Expert
Smith, Kriston B.	ITT Fort Bragg	Phone: 910-396-9478 E-mail: smithkris@bragg.army.mil	Army Paint Shop Supervisor
Speers, John	AFRL/MLSC	Phone: 937-656-5699 E-mail: john.speers@wpafb.af.mil	ESTCP IRRIT Program Liaison

ESTCP Program Office

901 North Stuart Street
Suite 303
Arlington, Virginia 22203

(703) 696-2117 (Phone)
(703) 696-2114 (Fax)

e-mail: estcp@estcp.org
www.estcp.org