EXECUTIVE SUMMARY

Latent Energy Storage Systems

ESTCP Project EW-201514

AUGUST 2019

Distribution Statement A
This document has been cleared for public release

Page Intentionally Left Blank

This report was prepared under contract to the Department of Defense Environmental Security Technology Certification Program (ESTCP). The publication of this report does not indicate endorsement by the Department of Defense, nor should the contents be construed as reflecting the official policy or position of the Department of Defense. Reference herein to any specific commercial product, process, or service by trade name, trademark, manufacturer, or otherwise, does not necessarily constitute or imply its endorsement, recommendation, or favoring by the Department of Defense.

Page Intentionally Left Blank

EXECUTIVE SUMMARY

Project: EW-201514

TABLE OF CONTENTS

Page

1.0 INTRODUCTION 1
2.0 OBJECTIVES 3
3.0 TECHNICAL APPROACH 5
4.0 COST AND PERFORMANCE ASSESSMENT 9
5.0 IMPLEMENTATION ISSUES 11
5.1 TECHNOLOGY OBTACLES 11
5.2 TECHNOLOGY TRANSFER ISSUES 11

LIST OF FIGURES

Page

Figure 1. Exterior View of PhaseStor Tank and Cutaway Showing Heat-exchange Array..... 6
Figure 2. Top Sectional View of Heat-exchange Header and Manifold..... 7
Figure 3. Revised Piping Schematic..... 7

LIST OF TABLES

Page

Table 1. A Summary Table for Phase 1 (PS-1) and Phase 2 (PS-2) Tanks 6
Table 2. Baseline Performance Comparative (numbers below are rough estimates) 9
Table 3. Qualitative Results 9
Table 4. Quantitative Objectives Results 10

Page Intentionally Left Blank

ACRONYMS AND ABBREVIATIONS

DoD Department of Defense

LESS Latent Energy Storage System

NTC National Training Center

PCM phase change material

TCM thermo-chemical materials
TES thermal energy storage

UTES underground thermal energy storage

Page Intentionally Left Blank

1.0 INTRODUCTION

The following report outlines the findings of a demonstration project intended to validate the use of organic, bio-based phase change material (PCM) to store and release thermal energy on demand.

Phase change materials are substances that shift between two states or phases of matter (e.g., solid to liquid) at a specific temperature. As they change phase, they absorb or release thermal energy keeping the surrounding at nearly fixed temperature. This phase change temperature can be adjusted based on eutectic[1] mixtures of several PCMs or the use of a single PCM chemistry with the right phase change temperature.

Given the high cost of ownership combined with the Department of Defense's (DoD) commitment to reduce its carbon footprint, it is widely accepted that providing support in the development of efficient and inexpensive energy storage devices is as important as developing new sources of energy. Thermal energy storage (TES) can be defined as the temporary storage of thermal energy at a specific engineering temperature. In comparison, sensible heat is the heat that results from a temperature change and is the most common form of TES. Sensible heat storage is not a new concept, the most common example is the storage of water, which has been in practice for over a hundred years.

Over the past 15 years there has been a concentrated focus on energy storage technologies. In most cases, this has centered on the potential for electrical energy storage; however, thermal energy storage will play an important role in future storage solutions. Electrical energy storage technology is still very much in its infancy and has many technical hurdles to overcome. Electrical energy storage is unlikely to become a commercially accepted technology for another 15-20 years. In contrast, we have had access to latent heat thermal storage technology for well over 30 years. Generally, latent heat thermal energy storage does not provide the range of benefits for the cost, although this has more to do with misconceptions and poor management than the technology itself. Over the past 30 years, latent heat thermal storage technology has progressed very little. Some of the following technologies have been applied, but so far are proving to have limited applications in the building industry, due mainly to limited commercial use.

1. Underground thermal energy storage (UTES).
2. Phase change materials.
3. Thermo-chemical materials (TCM).

The use of PCM-based TES can overcome many of the sensible heat storage limitations. A PCM system enables higher storage capacities and can target defined discharge temperatures.

[1] Eutectic: relating to or denoting a mixture of substances (in fixed proportions) that melts and solidifies at a single temperature that is lower than the melting points of the separate constituents or of any other mixture of them.

Phase change materials can be used for both short-term (daily) and long-term (seasonal) energy storage, using a variety of techniques and materials. For example, the incorporation of micro-encapsulated PCMs installed into a building wall assembly can considerably increase the thermal mass and capacity of lightweight building walls. The micro-encapsulated PCMs can be passively or actively charged to cool or heat the building by storing and releasing energy when the temperature range exceeds the PCM melt or freeze setpoints. This causes a reduction or avoidance in the need for mechanical heating and cooling.

2.0 OBJECTIVES

The purpose of this demonstration was to validate the performance of an engineered bio-based PCM using an advanced thermal energy storage system—Latent Energy Storage System (LESS)—that employed an engineered bio-based polymeric gel to store latent energy in a heat exchanger. This allows storage of thermal energy at specified temperatures, reducing overall energy use. This project's objective was to demonstrate, at the Army National Training Center (NTC) at Ft. Irwin, CA, the potential for an engineered PCM to store thermal energy at pre-determined temperatures.

The primary objectives of this demonstration were to validate the following:

1. Performance of a biobased PCM to store and release energy at a pre-determined temperature.
2. Ability to use PCM storage as a peak KW demand control strategy.
3. Ability to control the release of energy based on building load demand over long- and short-time frames.
4. Ability to control temperature discharge gradient over calculated time-period.
5. Ability to maintain consistent temperature over the trial period.

This approach to thermal storage can deliver substantial savings not only in energy costs but also in infrastructure, equipment, and operational maintenance costs. The performance metrics were to provide the following:

- 20% or more plant peak demand energy reduction.
- 25% plant energy cost savings (based on time of use rates).
- 40% reduction in chiller sizing when replacement is due.

This supports energy goals set by the DoD and is a technology that enables reduction of fossil fuels and promotion of renewable energy sources.

Page Intentionally Left Blank

3.0 TECHNICAL APPROACH

The LESS was integrated into the existing chilled water generation system at the 18.5K ft^2 Fort Irwin Education Center. This was accomplished by the modification of the chiller piping to include valve connections allowing the TES to operate in sequence with an electric powered water chiller. (See example for Building B1020 in Fig 3 below)

The project introduced the use of PCM into large-scale thermal energy storage systems, such as heat exchangers, for the control of electrical peak demand loads. LESS is modular and self-contained thermal energy storage capable of storing and redistributing thermal energy at a predetermined temperature. This technology uses the well-established principle of the latent heat of fusion when changing phase from liquid (gel) to solid. The system is based on the re-purposing of established polymer and carbon steel heat exchanger technology used extensively in other industries. The system comprises an atmospherically vented tank, in which heat exchangers are fully immersed in a cross-linked polymeric matrix gel, specifically engineered for either high or low temperature storage. At the core of the LESS concept is an organic material derived from agricultural biproducts. The material is food grade, non-toxic, non-flammable, and developed from a renewable supply source.

In Phase 1, the demonstration comprised two atmospherically vented aluminum tanks, each tank containing 960 gallons (6833 lbs.) of PCM with a total capacity of 615,000 Btu (51 ton-hours), therefore providing a combined capacity of 102 ton-hours storage.

In Phase 1, each tank contains 14 individual pressurized polypropylene heat exchangers fully immersed in the PCM. Each heat exchanger is factory manufactured from machine-welded polypropylene, comprising 2 x 2” diameter headers welded to 196 x 3/8” diameter tubing. Each heat exchanger has a total submerged surface area of 163 ft^2.

The heat exchangers are connected within the top section of the tank above the headers through a common manifold and piped in parallel to maintain a pressure drop of less than 2 psi.

The process fluid, which in this demonstration was chilled water with a 5% mix of bio-based glycol, flows through the heat exchangers under a pressure of 60psi (each heat exchanger has recommended maximum pressure rating of 90psi).

In Phase 2, when an enhanced concept system was installed, comprising 8 single modules, each tank containing ~450 gallons (3237 lbs.) of mixture with an active PCM weight of 2430 lbs. for a total capacity of 300,000 Btu (25 ton-hours), therefore providing a combined thermotical capacity of 200 ton-hours storage.

In Phase 2, the same type of heat exchangers was used, however the size of individual tanks was smaller to give more flexibility in the parallel and series connections as modular tanks, comprising 8 single modules. Each tank contains 6 heat exchangers with 10% increase in surface contact area. The tanks are blow form/welded internal polyethylene tank with Internal lightweight tubular steel framing. See Table 1 and Figures 1 & 2 below:

Table 1. A Summary Table for Phase 1 (PS-1) and Phase 2 (PS-2) Tanks

Tank	Size (inch)	Heat Exchangers	HX Length (inch)	Manifold	Construction	Ton-hrs
PS-1	86 x 66 x 86	14	136	PVC	Aluminum	40
PS-2	52 x 45 x 94	6	166	Polypropylene	Polyethylene	25

The system comprises the following commercially available components:

1. Bio-based PCM—manufactured by Phase Change Energy Solutions.
2. Polypropylene tubing heat exchangers—manufactured by Fafco Industries.
3. Internal polyethylene film liner—generic manufacture.
4. Close celled polyisocyanurate insulation -generic manufacture.
5. Storage tank—generic manufacture.
   a. Aluminum internal skin.
   b. Aluminum structural frame.
   c. Aluminum exterior skin.

Exterior view of the 50 ton-hour tank with cut away showing multiple vertical heat exchanger mounting.

Figure 1. Exterior View of PhaseStor Tank and Cutaway Showing Heat-exchange Array

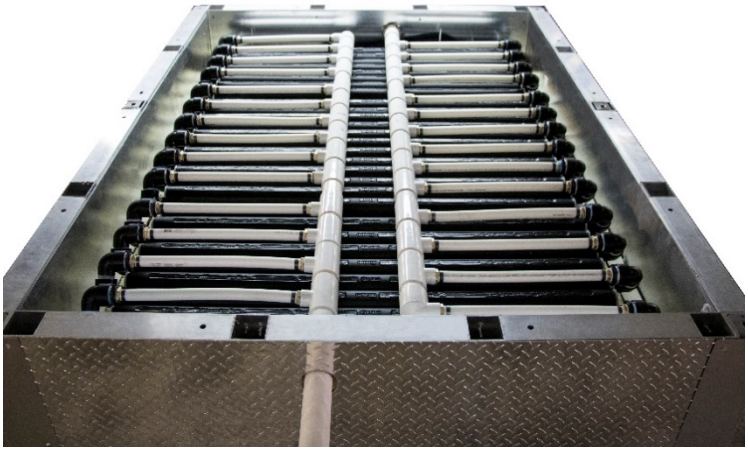

View from top of tank, prior to lid being fixed into place. Photo shows top of heat exchangers headers (black piping) interconnected by manifold (white piping).

Figure 2. Top Sectional View of Heat-exchange Header and Manifold

The schematic below shows the new piping (black/solid) required to connect the tanks into the existing piping (grey/dashed).

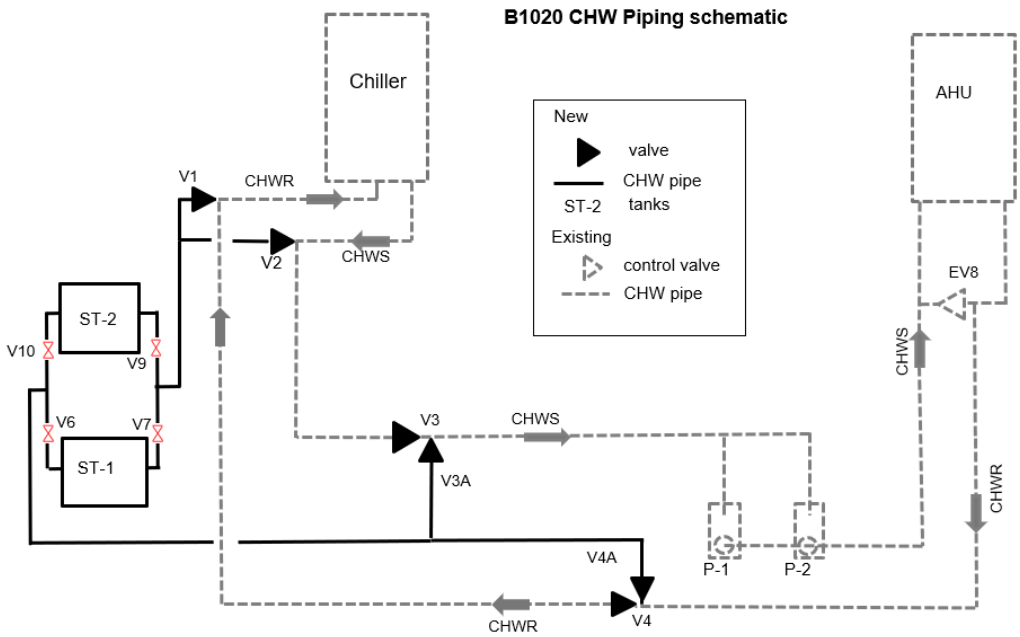

Figure 3. Revised Piping Schematic

Page Intentionally Left Blank

4.0 COST AND PERFORMANCE ASSESSMENT

The project developed some baseline Estimates for the ice storage TES vs the Phase change TES (Table 2).

Table 2. Baseline Performance Comparative (numbers below are rough estimates)

System	Installed ton-hrs	Purchase Cost	Install Cost	Total Cost	Annual Kwh	Energy Cost	$ Saving (yr)	% Saving (yr)	Payback (yrs) w/o incentive	Payback (yrs) w/ incentive
No Storage Baseline	0	0	0	0	49,700	$ 9,391	0	0	0	0
Ice-TES (Baseline)*	128	$ 110.00	$ 350.00	$ 58,788	59,640	$ 5,357	$ 4,034	43%	14.6	7.3
Phasestor-TES	128	$ 315.00	$ 170.00	$ 61,983	46,831	$ 4,870	$ 4,521	48%	13.7	6.9

**comparison of the ice storage system is based on the replacement of an existing primary pumping to primary/secondary as recommended by ice-TES manufacturers. Note: it is not the general practice to install ice-TES without the replacement of the chiller plant as costs are generally prohibitive in retrofit applications.*

In order to validate the estimates and the behavior of the PCM the demonstration was conducted in two phases over the 2017 and 2018 summers.

- Phase 1: the installation of a small scaled demonstration tank providing approximately 40 ton-hours of storage capacity intended to validate the use of a PCM to store and release energy on demand.

- Phase 2: the installation of an enhanced scaled demonstration designed to store 100% of the heat rejected by the building HVAC system during the daytime peak cooling period, reducing the use of the chiller which in turn reduces the power utility demand charge.

On completion of phase 1: the demonstration resulted in confirmation the PCM could store energy generated at night by the chiller plant and reject the heat from the building to the PCM during the peak daytime period (Table 3).

On completion of phase 2: the demonstration resulted in a reduction in energy costs by 43% depending on rates and the reduction of chiller energy by 7% (Table 4).

Table 3. Qualitative Results

Objective	Success Criteria	Results
System Resilience	Validate % of usable energy capacity in the system	verified 24/25 ton.hr (96%) of claimed energy storage per tank to be available in the tanks
User Satisfaction	Negligible effect on space comfort level over baseline	Satisfied cooling needs during discharge periods

Table 4. Quantitative Objectives Results

Objective	Success Criteria	Results
Energy Usage	5% reduction compared to baseline	Achieved 7.4% reduction compared to baseline
Peak demand energy usage	20% reduction to measured baseline	20% reduction in peak demand usage. 14.2 vs 17.7 kWh maximum energy usage) during on peak-hrs
System Economics	20% reduction in peak demand usage. 14.2 vs 17.7 kWh maximum energy usage) during on peak-hrs (table 1	43% reduction in energy cost

In summary, the findings on completion of phase 1 and phase 2 demonstrations are:

1. The demonstration confirmed the ability of the PhaseStor-TES to store and release energy on demand to meet the heat rejected by the building chilled water HVAC system.
2. The system can provide process fluid (chilled water) at the design temperature consistent with building cooling load.
3. The system was able to maintain a consistent Entering Water Temperature/Leaving Water Temperature delta during the entire peak demand period.
4. The system consistently operated at an efficiency ratio with a coefficient of performance greater than 3.2 during freeze and melt cycles.
5. The system maintained environmental conditions that satisfied users.

5.0 IMPLEMENTATION ISSUES

5.1 TECHNOLOGY OBTACLES

Over the past years, several industrial companies have been working to partner with EnergyPlus software developers to enhance the predictability of phase change materials under real-life conditions via simulation tool. The goal is to enhance and optimize design parameters and performance of PCM-based system when connected to existing facilities and predict the potential for energy savings. Until now, existing simulation tools have failed to accurately predict experimental results. The obstacles and risk of not validating its energy saving potential on DoD facilities and other installations in general have increased the cost of pre-phase construction as well as number of iterations before a final and optimum system is found.

For instance, there have been critical issues that impacted this demonstration. The lack of an accurate simulation tool has impacted the ability to confirm that performance of the system is consistent regardless of the different climate zones. But the impact of this issue is minimal as the tanks have been tested under high temperature conditions at Ft. Irwin, CA.

Although detailed discussions with several software developers, such as Big Ladder, have occurred, PhaseStor has not successfully simulated the performance at the system engineering level. This is due to most efforts being focused on predicting the phase change behavior in a smaller system, such as a small room with phase change material above ceiling tiles.

5.2 TECHNOLOGY TRANSFER ISSUES

PCM-TES technologies face some implementation issues to market entry, these can be identified under the following categories:

1. Market readiness.
2. Containment vessel design.
3. PCM manufacturing costs in general as a thermal storage medium.

While PCM-TES remains an emerging technology, manufacturing cost of the PCM remains the key issue as the raw materials cannot be purchased or manufactured as a commodity product and remain a custom order.

In conclusion, there is very limited data on potential opportunities for TES in DoD. This project has introduced a potential solution that can address the problem of reducing peak loads at DoD facilities. A TES that embraces a LESS may be a usable solution for DoD requirements.