From Waste Steel to Matériel: *Additive Manufacturing Enabled Agile Manufacturing*

Karl Sundberg, Raymond Monroe, Yutao Wang

Jianyu Liang, Diran Apelian, Richard Sisson, Brajendra Mishra

Worcester Polytechnic Institute

Jian Yu, Brandon McWilliams

ARL

SERDP • ESTCP SYMPOSIUM
25 YEARS OF ESTCP
2019 | Enhancing DoD's Mission Effectiveness

*****Matériel***: Military materials and equipment.

Metal Production Trends

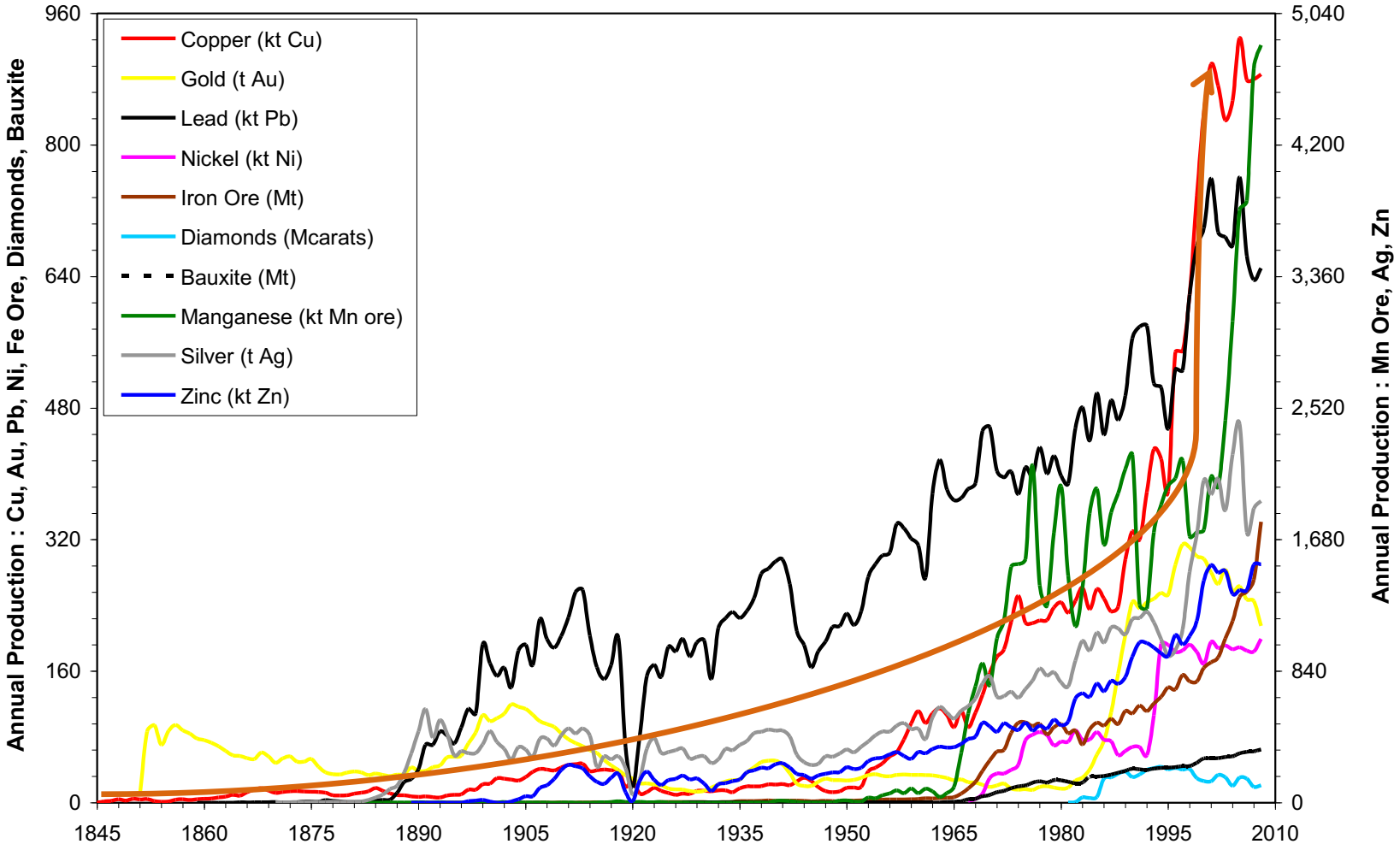

G. Mudd, 2009, Sustainability of Mining

SERDP • ESTCP SYMPOSIUM
#SerdpEstcp2019

Trends in Ore Grade

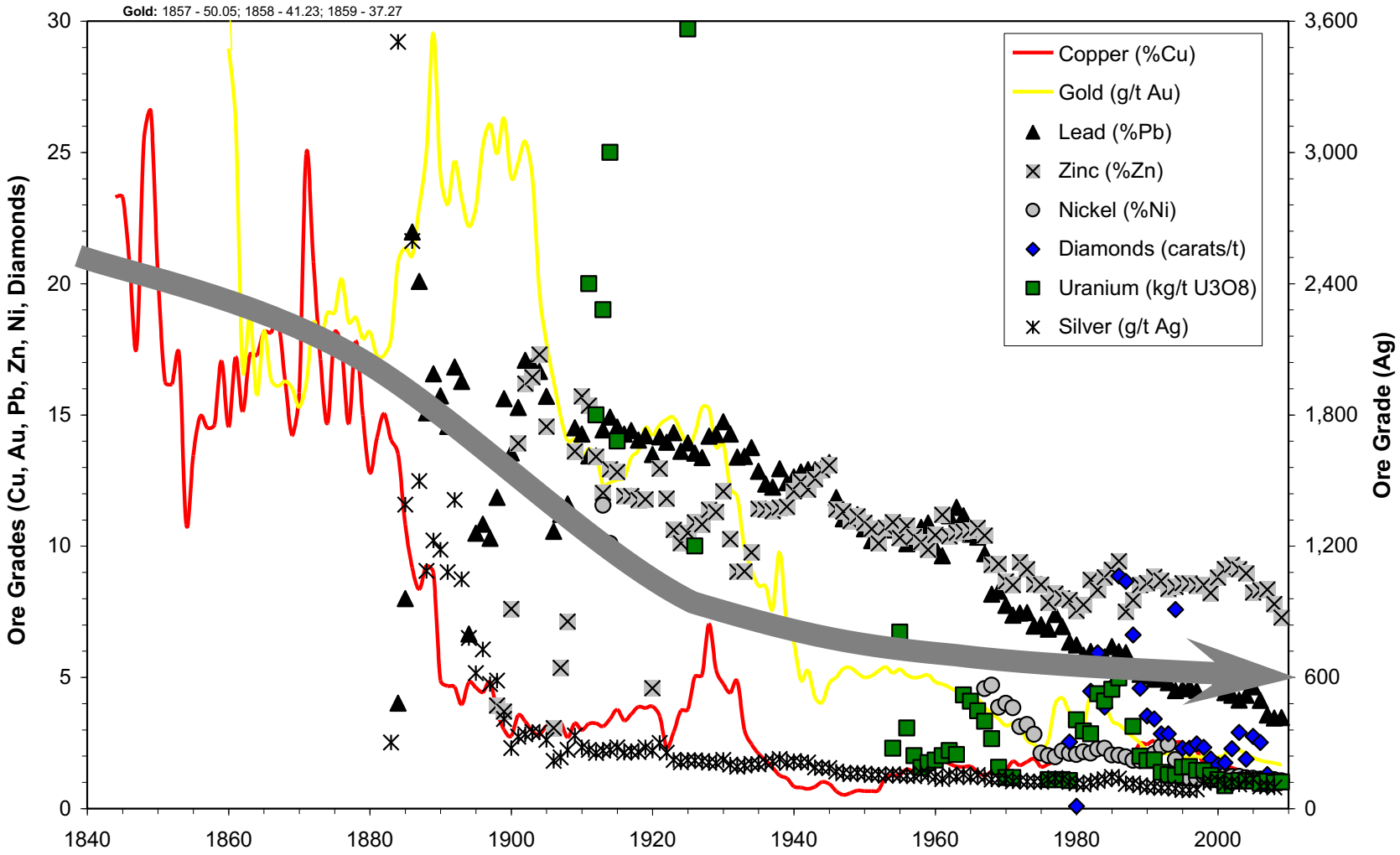

G. Mudd, 2009, Sustainability of Mining

SERDP • ESTCP SYMPOSIUM
#SerdpEstcp2019

Problem Statement

Need to develop agile manufacturing techniques that take advantage of recycled and reclaimed metals generated at forward operating bases (FOBs). A safe and environmentally responsible way to turn a specific waste-stream into value-added products for use by the warfighter is the goal.

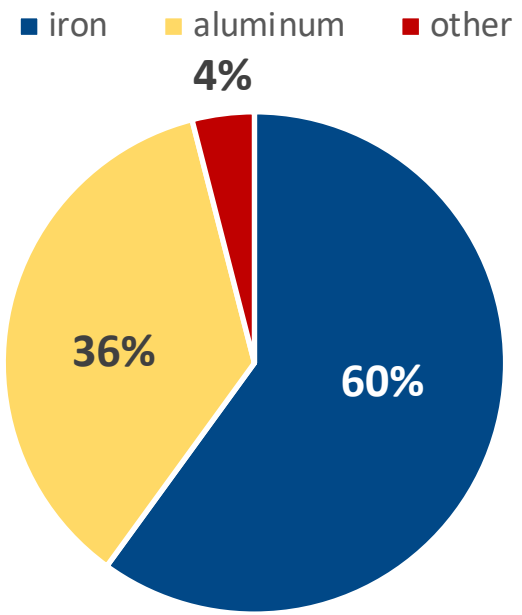

Recommended breakdown of metal waste recipe at FOBs

SERDP • ESTCP SYMPOSIUM
#SerdpEstcp2019

Mission Vision

Improving self-sustainability of the warfighter in theater
Increasing operational readiness; Reducing logistics tail

Goals

Creating a 3D printing enabled investment casting process using iron wastes generated at FOBs

Objectives

1. Creating an effective sorting, chemical composition monitoring and composition adjustment process for iron wastes at FOBs that enables quality control of material
2. Establishing additive manufacturing (AM) technology enabled investment casting (IC) using iron wastes from FOBs as the cast material
3. Optimizing and minimizing post process treatments for required quality of cast parts

SERDP • ESTCP SYMPOSIUM
#SerdpEstcp2019

Technical Approach

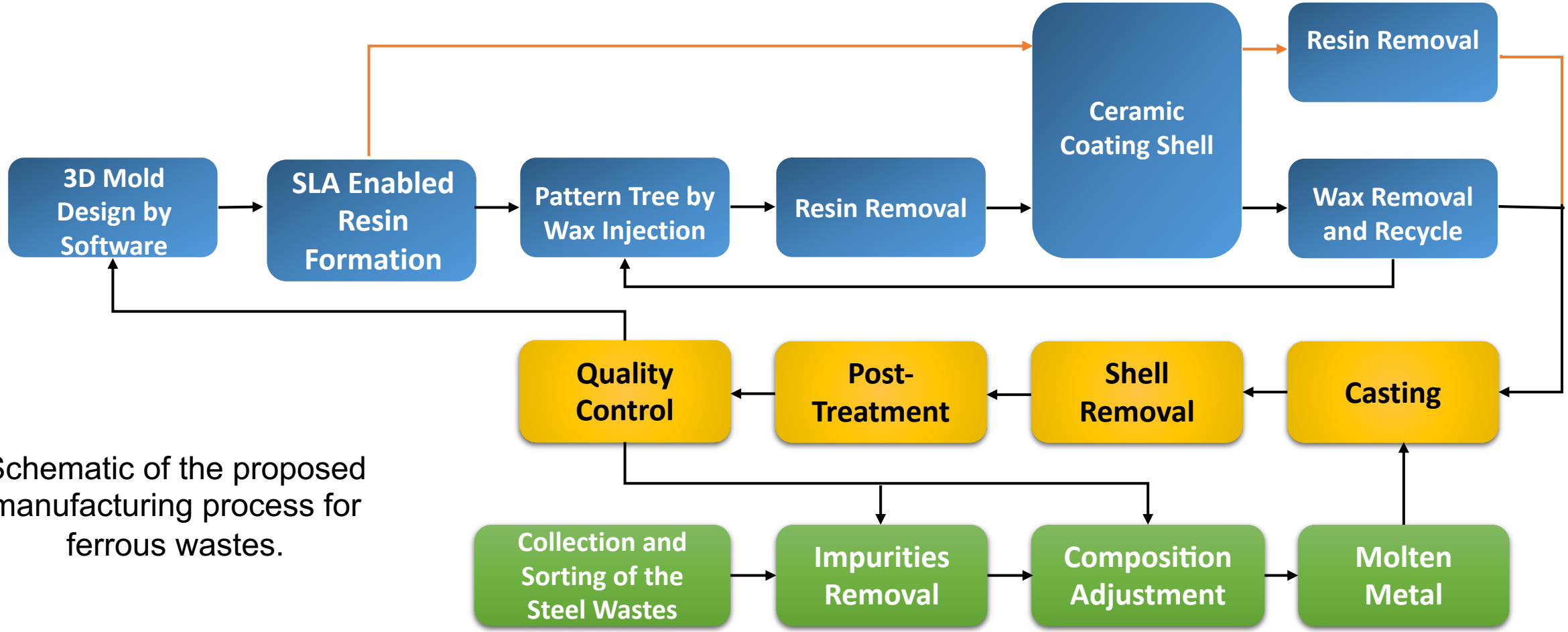

Schematic of the proposed manufacturing process for ferrous wastes.

SERDP • ESTCP SYMPOSIUM
#SerdpEstcp2019

Technical Background

The Need to Control Composition of Steel Scraps for High Quality Parts

The typical observed ferrous (iron) wastes at FOBs

Elements	C	Mn	P	Cu	Ni	Cr	Mo	Al	N
Min wt%	0.110	0.950	0.023	0.045	1.155	4.295	0.038	0.075	0.025
Max wt%	0.135	2.075	0.030	0.150	3.113	4.825	0.663	0.150	0.063

It is important to recognize that any effective reuse and recycle of ferrous (iron) wastes in-theater must be based on a clear understanding of the chemical composition and techniques to monitor, adjust and control the chemical composition of the waste metal.

Approximately 60,000 pounds of scrap metal is shown in this image from the Government Liquidation website.

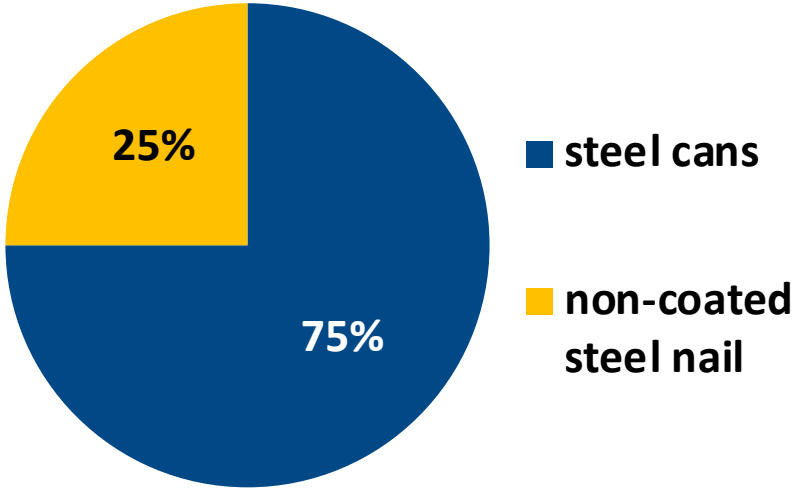

The recommended ferrous (iron) waste simulation on FOB

SERDP • ESTCP SYMPOSIUM
#SerdpEstcp2019

Waste Streams on Forward Operating Bases

Vehicle Components

Gun Barrels

Wide Range of Waste Pieces

- Five Loads of Waste Metal Received from ARL
  - Total Weight: 2567 lbs.

Portable OES – HITACHI HI TECH PMI MASTER UV TOUCH

- ISO 17026 A2LA certification
- Capable of laboratory quality results
- Capable of obtaining compositional data for light elements
- Database comprised of more than 10 million international materials, standards and grades
- Optimal for in the field characterizations

SERDP • ESTCP SYMPOSIUM
#SerdpEstcp2019

Optical Emission Spectroscopy (OES) Characterization

Metal Waste	Part Description	Weight (lb.)	Dimensions (inch)	Alloy Recognition
	Plate with partial rust and painted coating	4.02	9.00” x 8.50” x 2.25”	4340
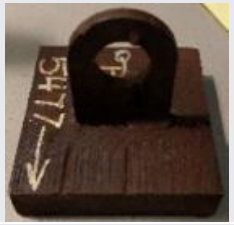	Block entirely covered in rust	15.69	6.00” x 6.00” x 5.75”	Non-Specified
	Brake Rotor entirely covered in rust	11.98	10.00” x 2.00”	Carbon Steel
	Small Round Stock partially covered in rust	0.28 (per piece)	1.125” x 2.00”	12L14

SERDP • ESTCP SYMPOSIUM
#SerdpEstcp2019

Weight (lbs.)	Contamination	Contamination Images	% C	% Si	% Mn	% P	% S	% Cr	% Ni	% Mo
15.84	rust on the outside, certain sides entirely covered other		0.23525	0.21408	0.55667	0.00586	0.00297	2.07417	2.38333	0.45333
8.07	one side is entirely covered in rust the other side has some		0.20575	0.01058	0.83667	0.00460	0.00632	0.05833	0.02125	0.01300
15.69	majority is covered entirely of rust, one side only partial		0.20650	0.16042	0.60833	0.00598	0.00395	1.58625	1.77042	0.33067
4.02	partial rust, painted coating		0.24183	0.13433	0.48942	0.01560	0.02150	0.54200	1.90692	0.31050
23.29	majority rust coveredc one side partial rust		0.18975	0.21142	0.23975	0.00629	0.00486	1.35083	3.20167	0.22392
14.26	majority rust coveredc one side partial rust		0.23825	0.17725	0.25333	0.00576	0.00341	1.33750	3.31833	0.20108
12.95	majority rust coveredc one side partial rust		0.22542	0.16800	0.21425	0.00681	0.00284	1.40083	3.27833	0.23875
15.36	majority rust coveredc one side partial rust		0.20783	0.16933	0.21450	0.00647	0.00258	1.39917	3.26667	0.23608

SERDP • ESTCP
SYMPOSIUM
#SerdpEstcp2019

Parts

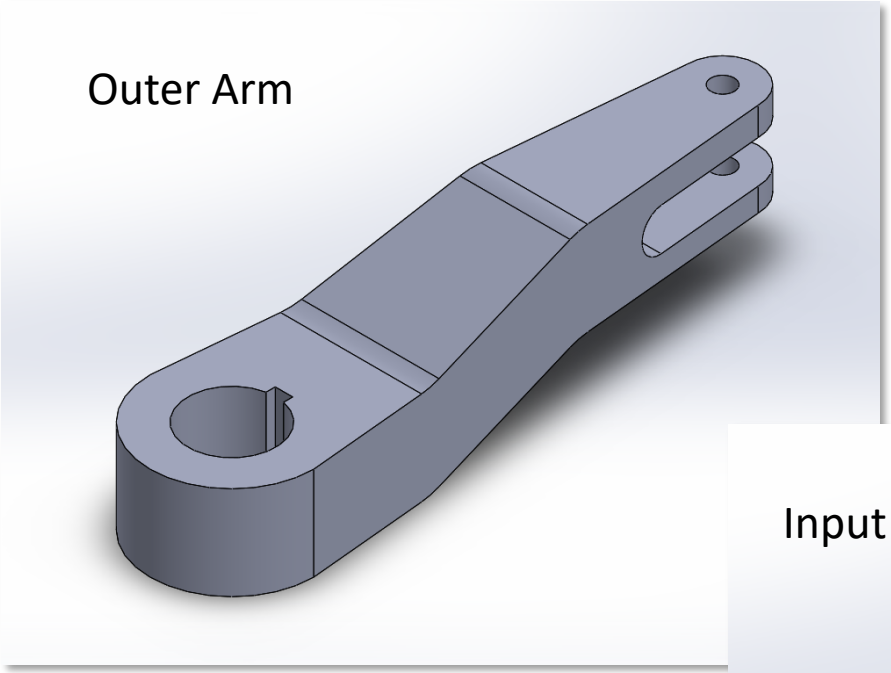

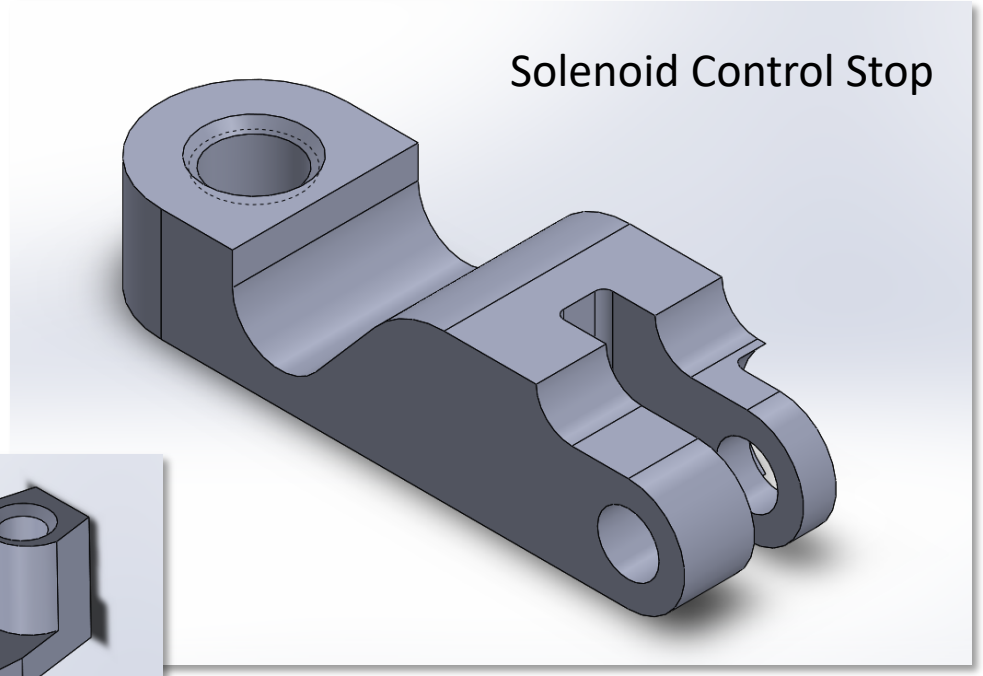

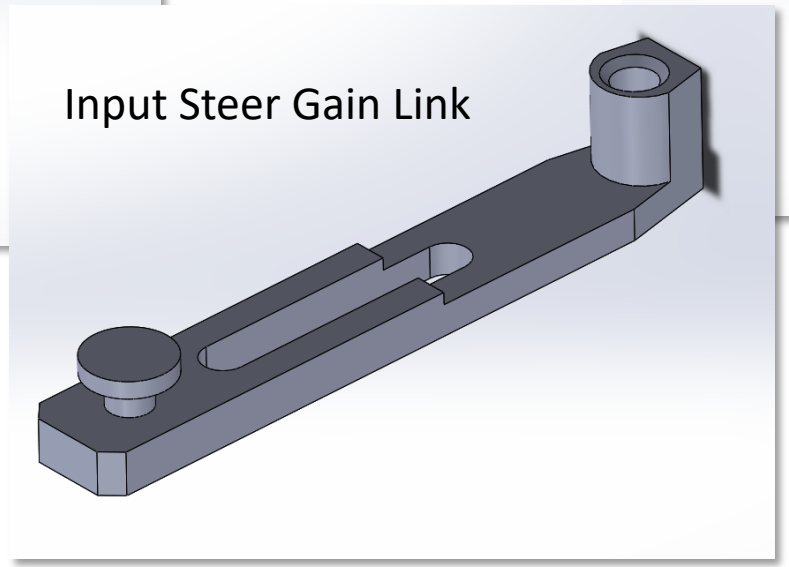

SERDP • ESTCP
SYMPOSIUM
#SerdpEstcp2019

Alloy Composition

Comp.	Alloy	C	Cr	Fe	Mn	Mo	Ni	P	Si	S
Solenoid Control Stop	8640	0.43%	0.40-0.60%	96.645-97.77%	0.75-1.0%	0.15-0.25%	0.40-70%	0.035%	0.15-0.30%	0.040%
Input Steer Gain Link	4130/40	0.33%	0.80-1.1%	97.03-98.22%	0.40-0.60%	0.15-0.25%	-	0.035%	0.15-0.30%	0.040%
	4142	0.45%	0.80-1.1%	96.725% (min)	0.75-1.1%	0.15-0.25%	-	0.035%	0.15-0.30%	0.040%
Outer Arm	1010	0.08-0.13%	-	99.18-99.62%	0.30-0.60%	-	-	0.04%	-	0.05%
	1025	0.22-0.28%	-	99.03-99.48%	0.30-0.60%	-	-	0.04%	-	0.05%

SFSA Alloys Used to Develop Guidance for Heats

		UTS ksi	YS ksi	El %	RA %	BHN	CE	DI
SC10XX	Average	78.3	52.3	31.0	57.8	170.0	0.39	0.80
	Std Dev	6.4	8.1	3.6	5.8	12.2	0.03	0.15
SC86XX	Average	117.1	97.5	19.5	48.9	241.7	0.59	3.15
	Std Dev	7.4	8.5	3.5	8.6	21.5	0.04	0.74
SC43XX	Average	153.1	135.1	16.0	45.3	309.2	0.69	5.36
	Std Dev	17.9	22.1	3.0	8.4	39.3	0.04	1.02

- DI=0.54*C*(1+3.333*Mn)*(1+0.7*Si)*(1+0.33*Ni+0.066*Ni^0.55*Ni^3+0.18*Ni^4)*(1+2.16*Cr)*(1+3*Mo)*(1+0.365*Cu)*(1+1.73*V)
- CE= C+ (Mn+Si)/6+ (Cr+Mo+V)/5+ (Ni+Cu)/15

SERDP • ESTCP SYMPOSIUM
#SerdpEstcp2019

Path from Scrap to Parts

Original Data Source

Data Driven Analysis

Learn relations between factors.
Data regression analysis by fuzzy neural network

Prediction

Predict usable parameters
for desirable performances

Validation

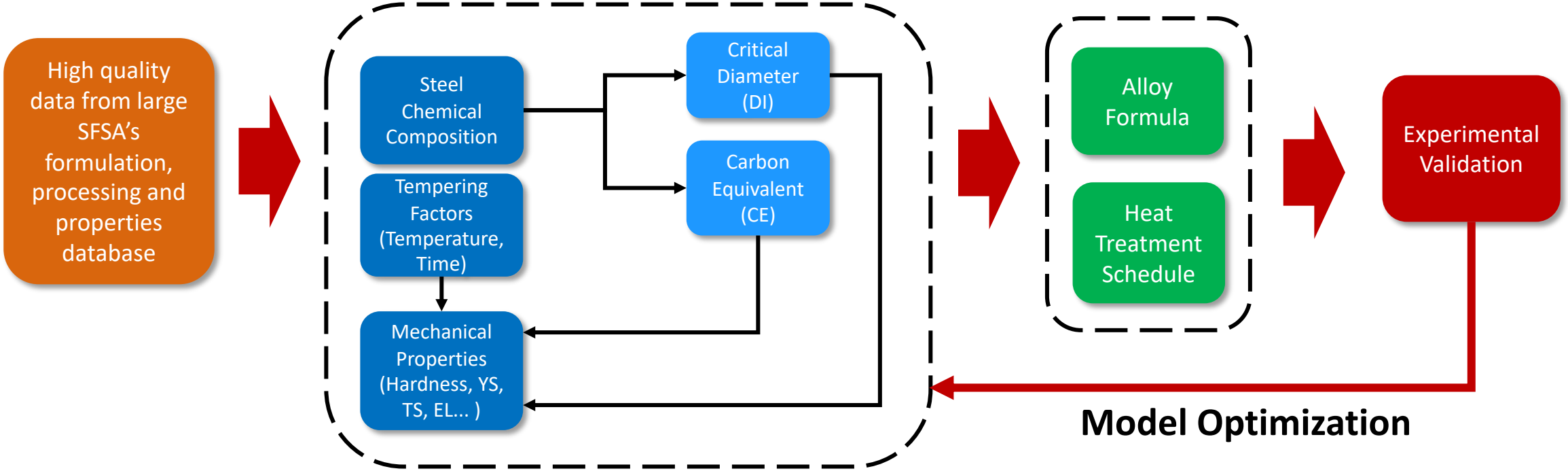

SERDP • ESTCP SYMPOSIUM
#SerdpEstcp2019

Correlation of BHN with YS for SFSA data set

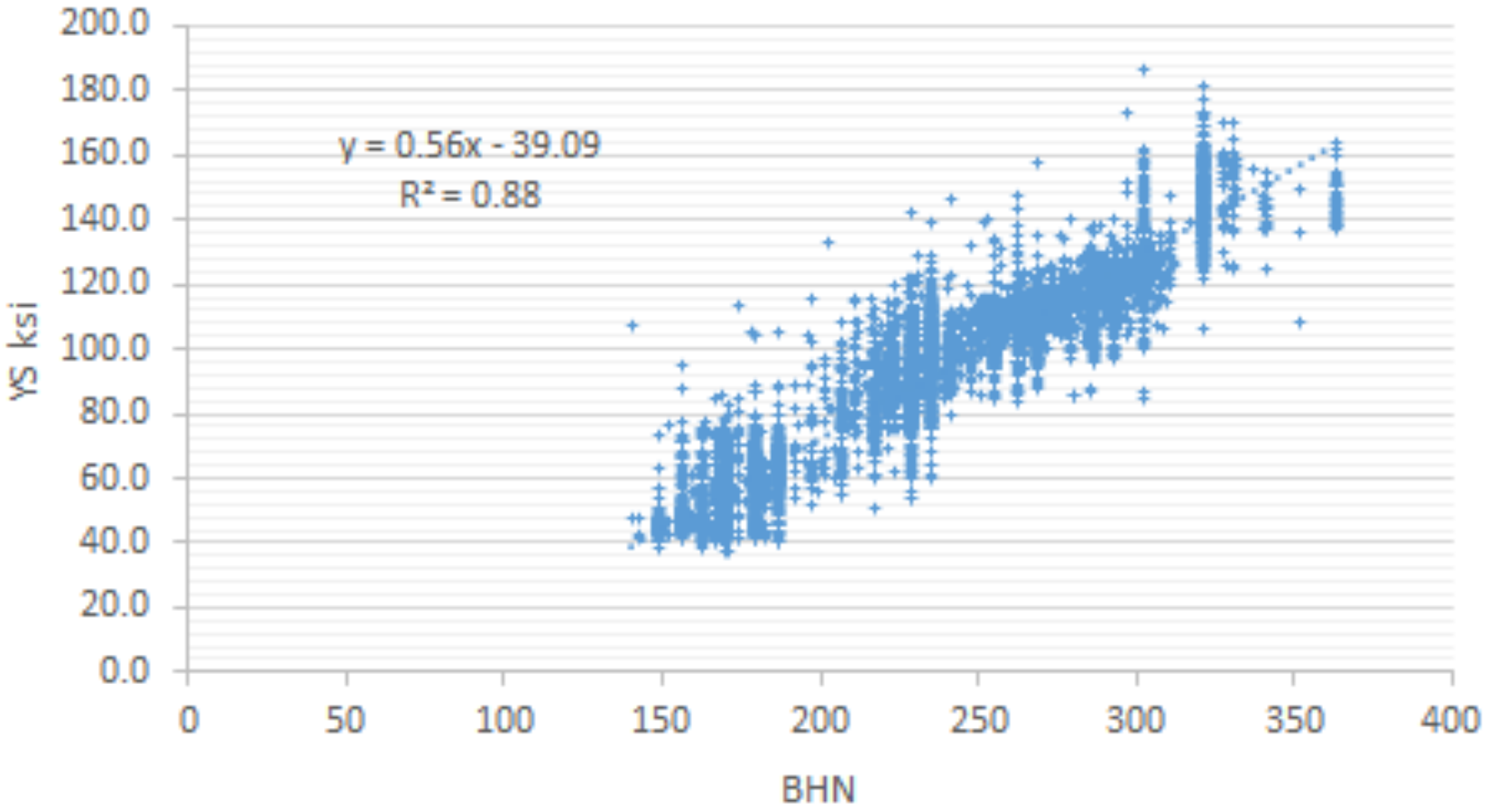

SERDP • ESTCP SYMPOSIUM
#SerdpEstcp2019

Correlation of DI with YS for SFSA data set

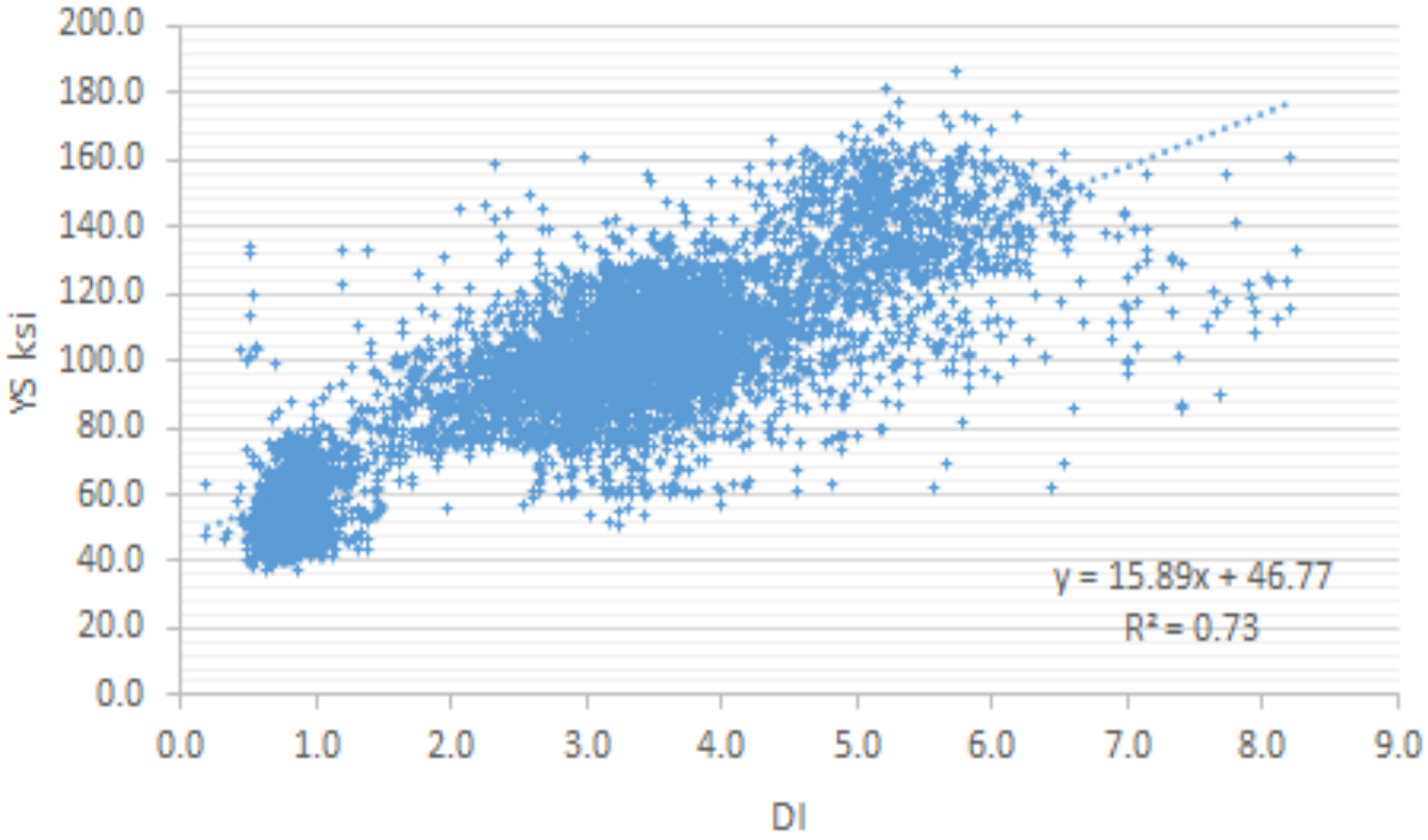

DI=0.54*C*(1+3.333*Mn)*(1+0.7*Si)*(1+0.33*Ni+0.066*Ni^0.55*Ni^3+0.18*Ni^4)*(1+2.16*Cr)*(1+3*Mo)*(1+0.365*Cu)*(1+1.73*V)

SERDP • ESTCP SYMPOSIUM
#SerdpEstcp2019

Correlation of CE with YS for SFSA data set

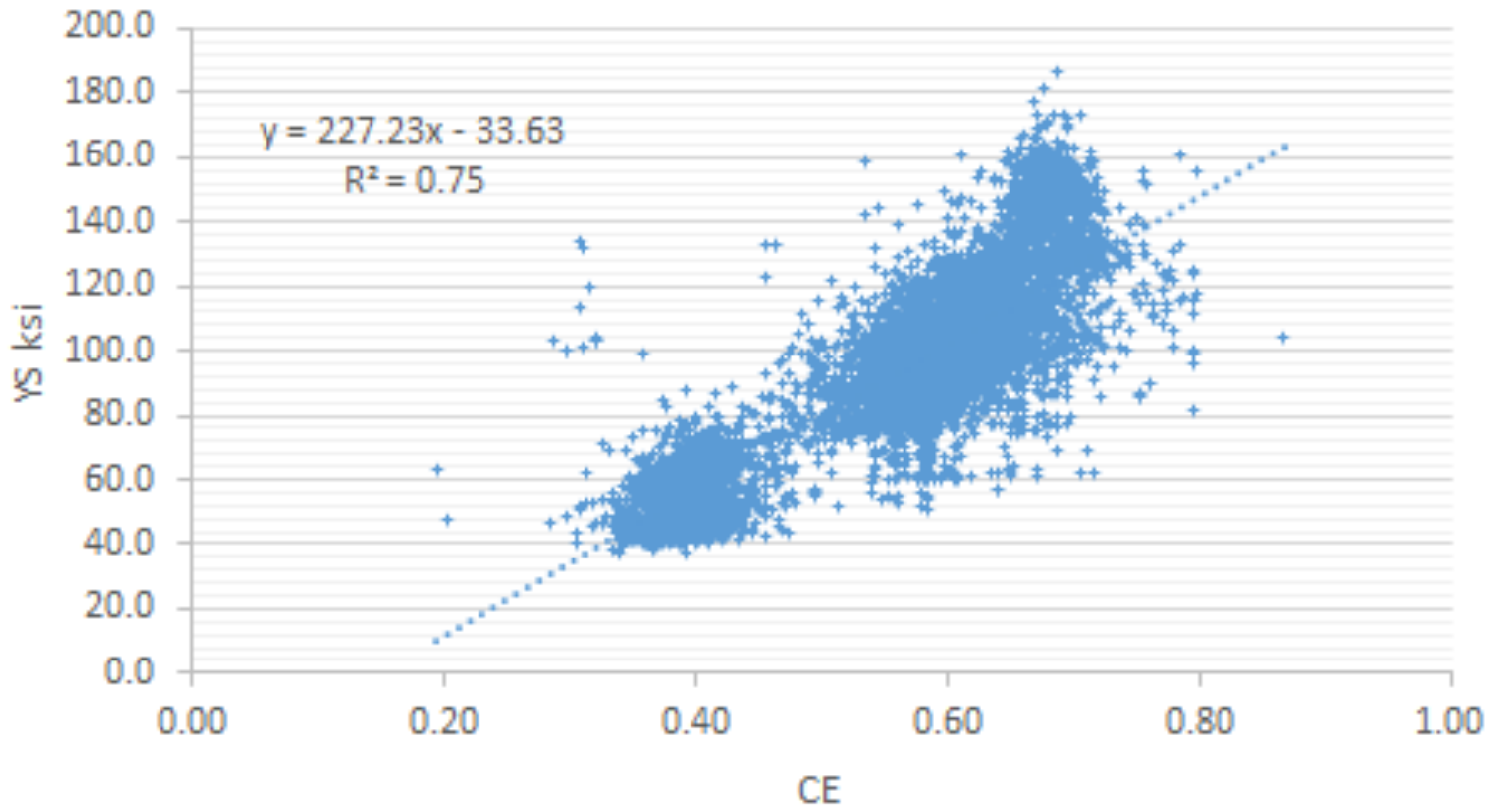

CE= C+ Mn/6+ (Cr+Mo+V)/5+ (Ni+Cu)/15

SERDP • ESTCP SYMPOSIUM
#SerdpEstcp2019

Blending Model Developed to Formulate Heat Charges from Waste

Steel 1 Carbon Steel 45 ksi YS																		
				CE	DI	C	Si	Mn	P	S	Cr	Mo	Ni	Al	Co	Cu	V	Sn
Heat size			Recovery			0.900	0.950	0.950	1.000	1.000	0.970	0.990	0.990	1.000	1.000	1.000	1.000	1.000
70 lbs		Heat		0.431	0.889	0.147	0.506	0.768	0.021	0.013	0.190	0.054	0.343	0.015	0.005	0.180	0.009	0.011
			Aim	0.400	0.800													
			Min		0.600	0.150	0.400	0.500			0.000	0.000	0.000					
			Max	0.500	0.900	0.300	0.600	1.200	0.035	0.035	0.500	0.200	0.500					
Waste parts	name	Remain	Added	Fraction	Dimensions	% C	% Si	% Mn	% P	% S	% Cr	% Mo	% Ni	%Al	%Co	%Cu	%V	%Sn
#3-35	Plate with Square Hole	45.400	54.600	0.780	27.75" x 15.125" x 1.0"	0.136	0.050	0.809	0.017	0.008	0.077	0.014	0.084	0.019	0.003	0.188		0.009
#4-15	big thread barrel 5	32.780	10.000	0.143	4.5" x 24"	0.355	0.320	0.739	0.055	0.022	0.879	0.284	1.870		0.017	0.090	0.052	0.020
#3-32	Big L Beam	27.810	5.000	0.071	3.0" x 3.0" x 64.0"	0.087	0.270	0.972	0.002	0.048	0.123	0.037	0.189		0.009	0.284	0.022	0.015

SERDP • ESTCP SYMPOSIUM
#SerdpEstcp2019

Experiments Using the Established Blending Model

Melt	Charge Material	Obtained Alloy	Comments
#1	Blends of waste materials targeting AISI 8640 (30-60 HRC)	AISI 8640	Slightly high in Chromium, which was anticipated in formulation.
#2	Blends of waste materials targeting carbon steel with 170 HBW	Carbon steel with 194 HBW	Using CE (carbon content) and DI (ideal critical diameter) in addition to individual composition content for control of the obtained mechanical properties
#3	Blends of waste materials targeting alloy steel with 242 HBW	Alloy steel with 244 HBW	Using CE (carbon content) and DI (ideal critical diameter) in addition to individual composition content for control of the obtained mechanical properties

Waste Material to New Alloy

Waste material from ARL

Sorting & Blending

Melting & Pouring

As-cast ingots

Tensile bars machining

Characterization

SERDP • ESTCP SYMPOSIUM
#SerdpEstcp2019

Targeting Chemical Composition: 8640

		C	Si	Mn	P	S	Cr	Mo	Ni
Target: 8640	min	0.38	0.3	0.75	0	0	0.4	0.15	0.4
	max	0.43	0.6	1	0.035	0.04	0.6	0.25	0.7
As-cast composition (Ingots)		0.428±0.003	0.567±0.009	0.695±0.01	0.0186±0.001	0.016±0.002	0.746±0.008	0.190±0.005	0.658±0.007
Test Number		C	Si	Mn	P	S	Cr	Mo	Ni
1		0.423	0.576	0.697	0.0183	0.0176	0.742	0.188	0.651
2		0.423	0.579	0.705	0.0188	0.0179	0.751	0.194	0.664
3		0.43	0.563	0.689	0.018	0.0151	0.74	0.183	0.652
4		0.432	0.562	0.684	0.0177	0.0152	0.737	0.183	0.652
5		0.432	0.566	0.693	0.0191	0.0169	0.744	0.189	0.656
6		0.428	0.559	0.686	0.0193	0.018	0.746	0.192	0.659
7		0.428	0.577	0.722	0.0212	0.0174	0.762	0.198	0.673
8		0.428	0.555	0.68	0.0167	0.0135	0.743	0.189	0.658
Average		0.428	0.567125	0.6945	0.0186375	0.01645	0.745625	0.1895	0.658125
Stdev		0.003505098	0.009062284	0.013617216	0.001330883	0.001648376	0.007799954	0.005154748	0.007434235
		0.428±0.003	0.567±0.009	0.695±0.01	0.0186±0.001	0.016±0.002	0.746±0.008	0.190±0.005	0.658±0.007

The measured hardness of 53.93 HRC, which falls within the range of the expected hardness range for 8640.

SERDP • ESTCP SYMPOSIUM
#SerdpEstcp2019

Targeting Chemical Composition: 1025

		C	Si	Mn	P	S	Cr	Mo	Ni
Target: 1025	min	0.22	/	0.3	0	0	/	/	/
	max	0.28	/	0.6	0.04	0.05	/	/	/
As-cast composition (Ingots)		0.25±0.009	0.32 ± 0.009	0.65 ± 0.014	0.029 ± 0.005	0.016 ± 0.002	0.34 ± 0.012	0.114 ± 0.004	0.43 ± 0.007
Test Number		C	Si	Mn	P	S	Cr	Mo	Ni
1		0.243	0.314	0.656	0.0225	0.0129	0.42	0.112	0.438
2		0.234	0.309	0.643	0.0192	0.0132	0.401	0.111	0.428
3		0.253	0.327	0.628	0.0304	0.0188	0.409	0.109	0.435
4		0.254	0.319	0.649	0.0273	0.0168	0.395	0.112	0.437
5		0.252	0.323	0.642	0.0318	0.0187	0.38	0.116	0.417
6		0.249	0.313	0.672	0.029	0.0149	0.394	0.117	0.427
7		0.259	0.316	0.658	0.0326	0.0176	0.392	0.118	0.43
8		0.262	0.336	0.664	0.036	0.0188	0.395	0.119	0.438
Average		0.25075	0.319625	0.6515	0.0286	0.0164625	0.39825	0.11425	0.43125
Stdev		0.008908263	0.00874949	0.013938641	0.005498831	0.002481899	0.011997023	0.003693624	0.007285014

The measured hardness of 30.24 HRC, falls within the expected range. Mn was targeted higher than standard for better mechanical properties and welding properties

SERDP • ESTCP SYMPOSIUM
#SerdpEstcp2019

Targeting Mechanical Property

		CE	DI	Hardness (HBW)
Melt #2	Aim	0.4	0.8	170
	Obtained	0.46	0.64	194
Melt #3	Aim	0.6	3	242
	Obtained	0.58	3.21	244

DI=0.54*C*(1+3.333*Mn)*(1+0.7*Si)*(1+0.33*Ni+0.066*Ni^0.55*Ni^3+0.18*Ni^4)*(1+2.16*Cr)*(1+3*Mo)*(1+0.365*Cu)*(1+1.73*V)

CE= C+ (Mn+Si)/6+ (Cr+Mo+V)/5+ (Ni+Cu)/15

SERDP • ESTCP SYMPOSIUM
#SerdpEstcp2019

SLA Enabled IC

- Utilized the ProJet® 6000 HD SLA machine
- Utilized Visijet® SL Clear Resin
  - Heat Distortion Temperature @ 0.45 Mpa → 51°C
  - Heat Distortion Temperature @ 1.82 Mpa → 50°C
  - Glass Transition (Tg) → 70°C
  - Density (Liquid) @ 25°C, (Solid) @ 25°C → 1.1g/cm^3, 1.17 g/cm^3

Advantages
Hollow stereolithography pattern with an internal hexagonal support structure
Adds strength to the pattern
Allows for easy drainage
Facilitates collapse of the pattern during thermal expansion to help avoid cracking the shell
Large part volume: 25 x 25 x 25 cm
37,000 cm^3 of build for 10 gallons of resins

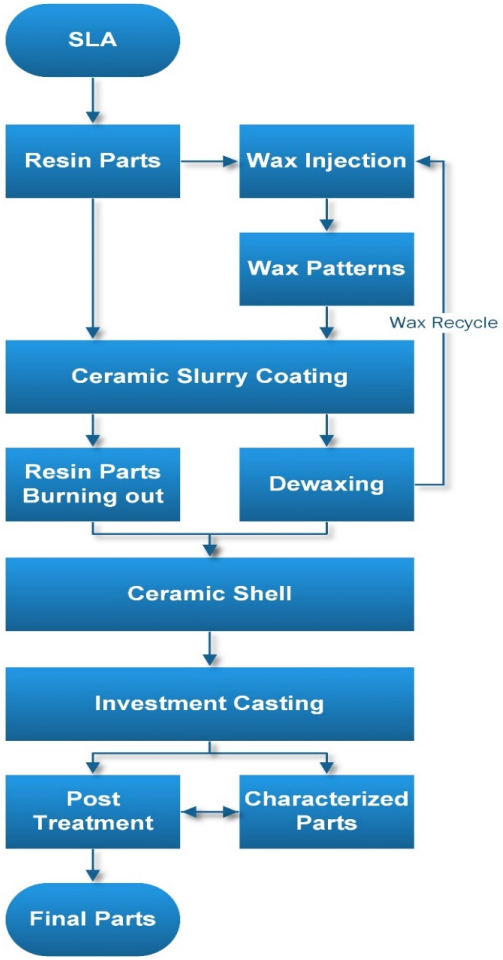

SERDP • ESTCP SYMPOSIUM
#SerdpEstcp2019

SLA Enabled IC Process

Ferrous (Iron) Waste Material

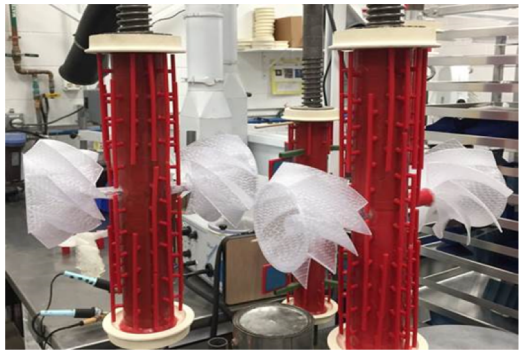

Printed SLA Patterns

Ceramic Sell Making

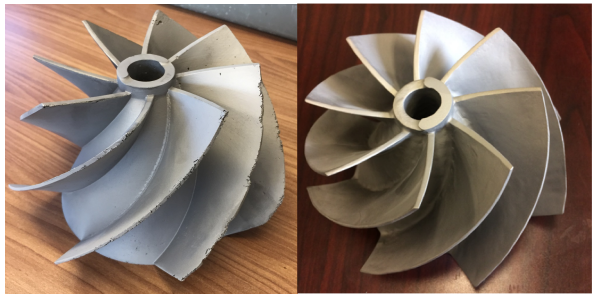

Investment Casting Finished Parts

Applications

SERDP • ESTCP SYMPOSIUM
#SerdpEstcp2019

Initial Analysis of the First Casting

- Residue buildup along inner edges of the blade
  - Result of ceramic shell cracking while burning out the resin pattern and material is added on the outside of ceramic shell in attempt of fixing the crack
- Inconsistent surface finish due to incomplete burn out of resin
  - Typically along blade edges
  - SLA printed resin pattern had solid fins
- Steps in surface
  - The steps in the SLA printed resin pattern were faithfully replicated in the casted part

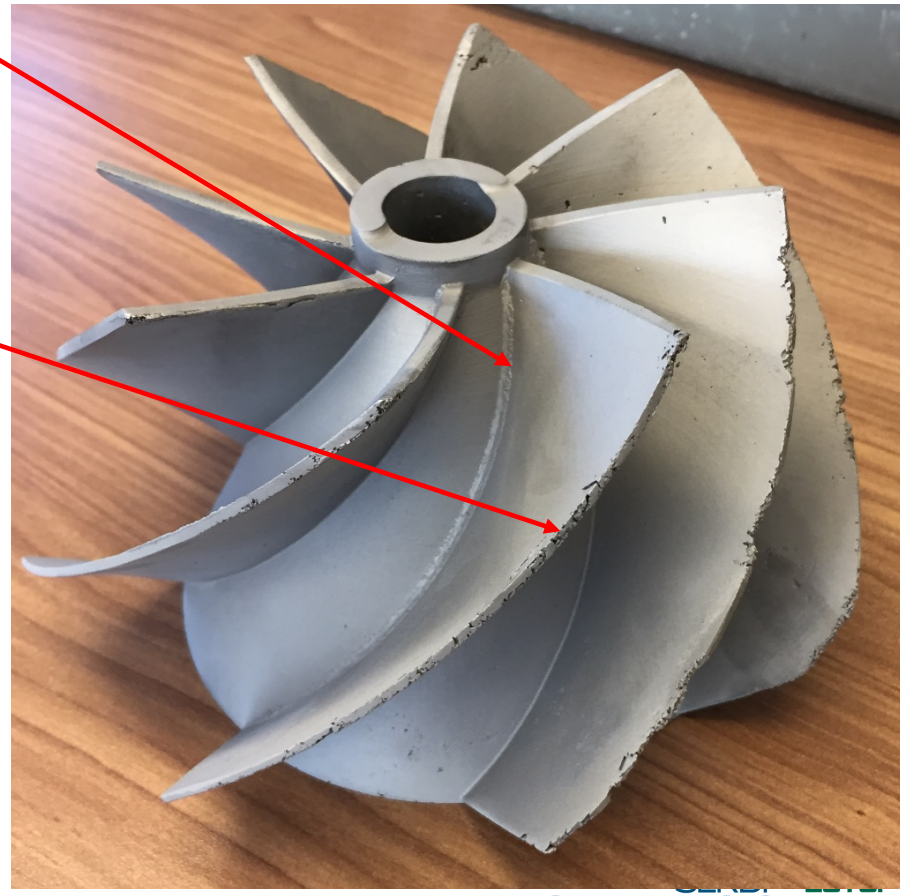

SYMPOSIUM
#SerdpEstcp2019

Surface Roughness of the First Casting

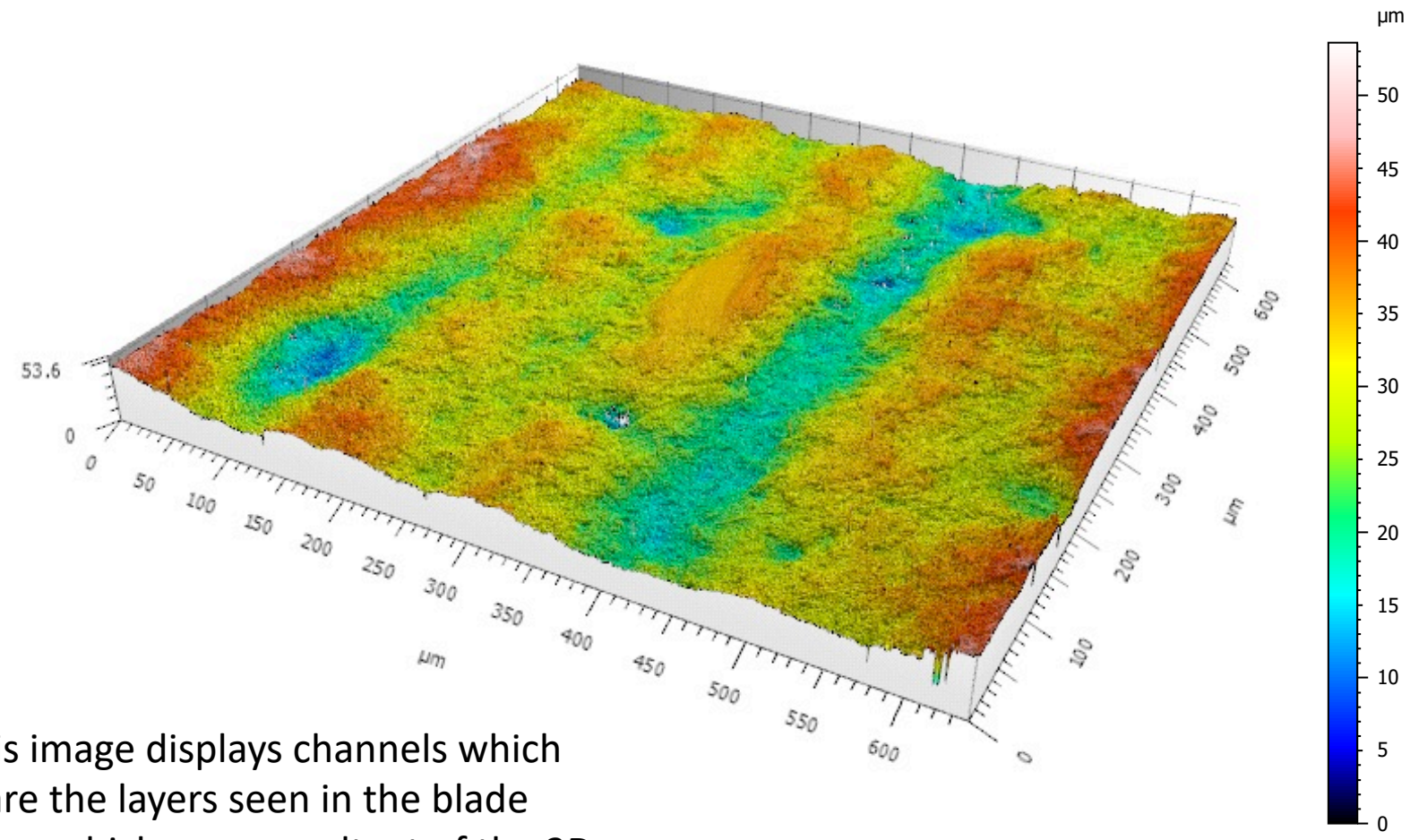

This image displays channels which are the layers seen in the blade surface which are a resultant of the 3D printed structure.

Height Parameters (ISO 25178)	
Sq	6.43 µm
Sa	5.12 µm
Str	0.153

The surface roughness of this impeller had a magnitude of deviation from the best fit plane of 6.43 um (Sq) and has some directionality which is evident from Str = 0.153

SERDP • ESTCP SYMPOSIUM
#SerdpEstcp2019

Initial Analysis of the Second Casting

- Residue buildup along inner edges of the blade
  - Less than the first casting, but still present
- Surface finish is better, but still can be improved
  - A Hollow 3D printed resin pattern was used, including the blades which burned out more completely than the previously used solid pattern
  - In addition, no steps were visible on the surface

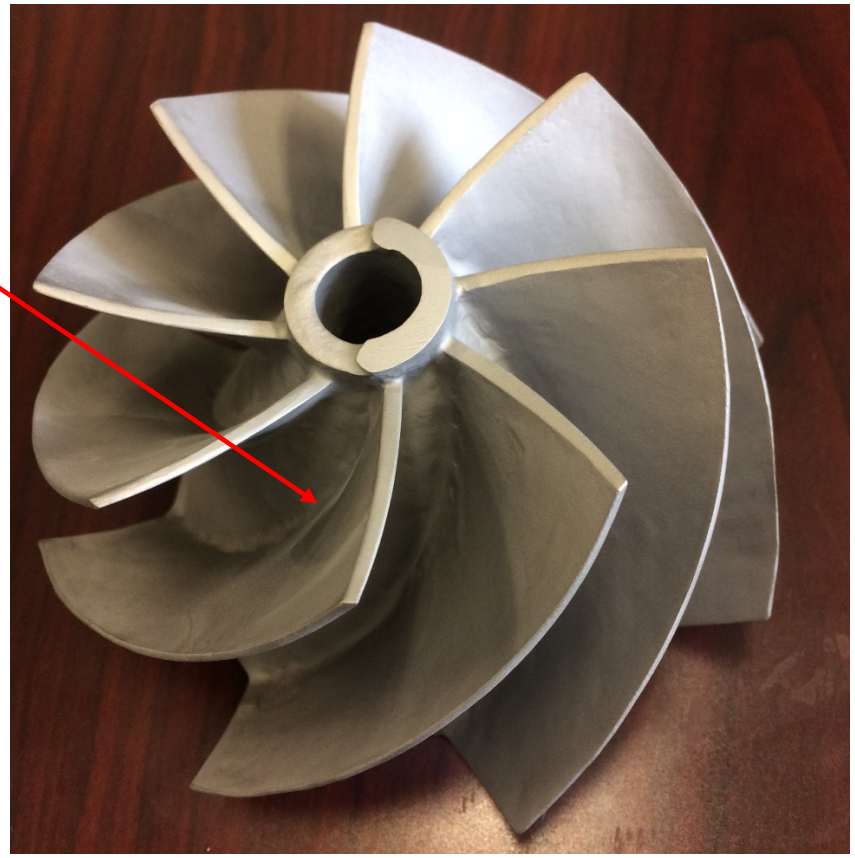

SERDP • ESTCP SYMPOSIUM
#SerdpEstcp2019

Casting Tree Design

- Design Intent
  - Start with single part production
  - Combine casting tree with the part
  - Fabrication entirely through SLA printer
- Integration of Casting Tree with the Part
  - Traditional IC requires the part be added to the casting tree with wax
  - Overall simplifies the process
  - Increases efficiency
  - Higher design accuracy

Simulated Casting Tree

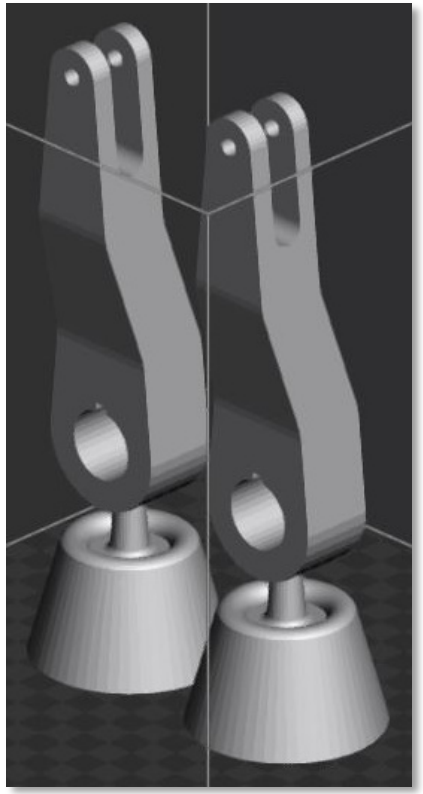

Failed Casting Tree Prints – Isopropyl Alcohol Exposure

SERDP • ESTCP SYMPOSIUM
#SerdpEstcp2019

Ceramic Slurry Mold Production

	Chemical compositions							
	Solid powder				Organic substance			
	Al_2O_3 particles		Mineralizer		Organic monomer	Cross-linking agent	Initiator	Catalyst
Adding amount	Coarser	Finer	Yttria	Magnesium oxide	AM	MBAM	APS	TEMED
Adding amount (g in 100 ml deionized water)	409.00	98.19	27.27	10.91	32	1.333	1.333	0.2666
Weight per cent of solid powder (per cent)	75	18	5	2	–	–	–	–

- An partially automated system will be utilized to produce molds based on this ceramic slurry recipe
  - Log the silica sand that we will be using as well
  - The ceramic slurry mold will be capable of casting ferrous material, ~1650 °C

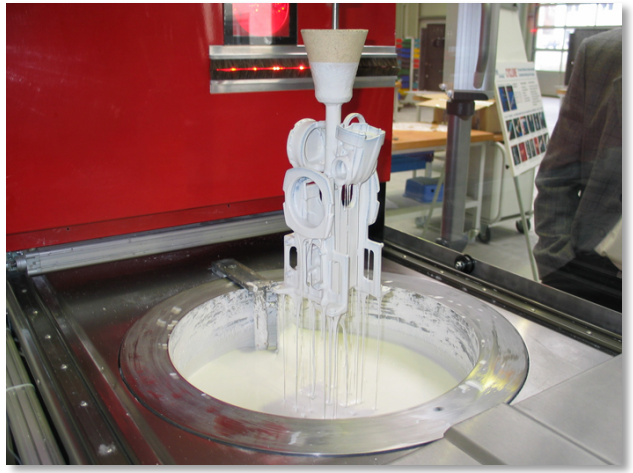

SERDP • ESTCP SYMPOSIUM
#SerdpEstcp2019

Summary

- Efficient sorting and collecting of steel waste, the most abundant waste, can be established in theater
- In situ composition monitoring and adjusting of steel wastes in theater can be effectively conducted using the portable OES setup for sorting
- SLA enabled IC manufacturing process of steel waste materials needs to be optimized
- Heat treatment is an important step towards high quality and should be prescribed according to needed mechanical properties

Acknowledgments

We would like to thank Mr. Scott Biederman (Hitchiner), Mr. Jeff Burek (DW Clark Inc.), Dr. Harold Brody (UConn), Mohamad Daeipour (Uconn), John Kurtz (Hitachi Hi-Tech), for their help and support.

Special thanks to the SERDP Program WP18-C4-1176 for funding our research.

Conference Presentations

- Wang, Y., Sundberg, K., Mishra, B., Apelian, D., Sisson, R. Liang, J and McWilliams, B. (October 2019). “From Waste Steel to Matériel: Additive Manufacturing Enabled Agile Manufacturing”, MS&T 2019, Portland, OR.
- Wang, Y., Sundberg, K., Mishra, B Apelian, D., Sisson, R., Liang, J. and McWilliams, B. (November 7th-8th, 2019). “From Waste Steel to Matériel: Additive Manufacturing Enabled Agile Manufacturing” DoD Steel Summit, APG, Aberdeen, MD.
- Sundberg, K., Kelly, S., Mishra, B., Apelian, D., Sisson, R., and Liang, J. (November 2018). “From Waste Steel to Matériel: Additive Manufacturing Enabled Agile Manufacturing”, 2018 Strategic Environmental Research and Development Program and Environmental Security Technology Certification Program (SERDP and ESTCP) Symposium, Washington, DC.
- Sundberg, K., Kelly, S., Mishra, B., Apelian, D., Sisson, R., and Liang, J. (March 2019). “From Waste Steel to Matériel: Additive Manufacturing Enabled Agile Manufacturing”, Symposium on Recycling, Waste Treatment and Clean Technology (REWAS 2019), San Antonio, TX. (Invited)

Thank you.

Questions?