Development of an Agile, Novel Expeditionary Battlefield Manufacturing Plant Using Recycled and Reclaimed Thermoplastic Materials

Dr. Prabhat Krishnaswamy

Senior Research Leader

Engineering Mechanics Corp. of Columbus (Emc^2)

December 4, 2019

SERDP • ESTCP SYMPOSIUM
25 YEARS OF ESTCP
2019 | Enhancing DoD's Mission Effectiveness

Project Team – SERDP WP 18-1047

- Dr. Prabhat Krishnaswamy, Mr. Richard ‘Rick’ Heggs, and Mr. Cameron Orth, Engineering Mechanics Corporation of Columbus, (Emc^2), Columbus & Wooster, OH
- Mr. Jonathan Trovillion and Mr. Stephen Cosper, US Army Corps of Engineers, Engineer Research & Development Center – Construction Engineering Research Laboratory (ERDC-CERL), Champaign, IL
- Mr. Curt Cozart, Common Sense Solutions Inc., Montclair, NJ (consultant for plastics recycling equipment and systems)

(Dr. Robin Nissan, SERDP, COR; Mr. Braxton Lewis, Noblis, Project Manager)

Presentation Outline

- Project Overview
- Recycling PET bottles into rPET* formulations
- Filament Production with rPET
- Additive Manufacturing (AM) - specifications for 3D printing
- Evaluation of Properties – applications for rPET components
- Conclusions to Date and Work Planned

* - recycled Polyethylene Terephthalate (#1 rPET)

Project Overview – Goals & Deliverables

Technology Focus

- Agile and mobile modular manufacturing plant to recycle waste PET (rPET) bottle scrap into useful products at Forward Operating Bases (FOBs).

Research Objectives

- Develop formulations, processing methods, and equipment and product specifications for FOB manufacturing.

Project Progress and Results

- Initial trials to convert rPET into 3D printer filament have been successful for Additive Manufacturing.

Technology Transition

- Upon completion of 3-year SERDP project US Army Corps of Engineers along with Emc^2 will lead the transition of the technology to develop a prototype manufacturing unit for FOBs.

Schematic of proposed modular manufacturing unit for FOBs

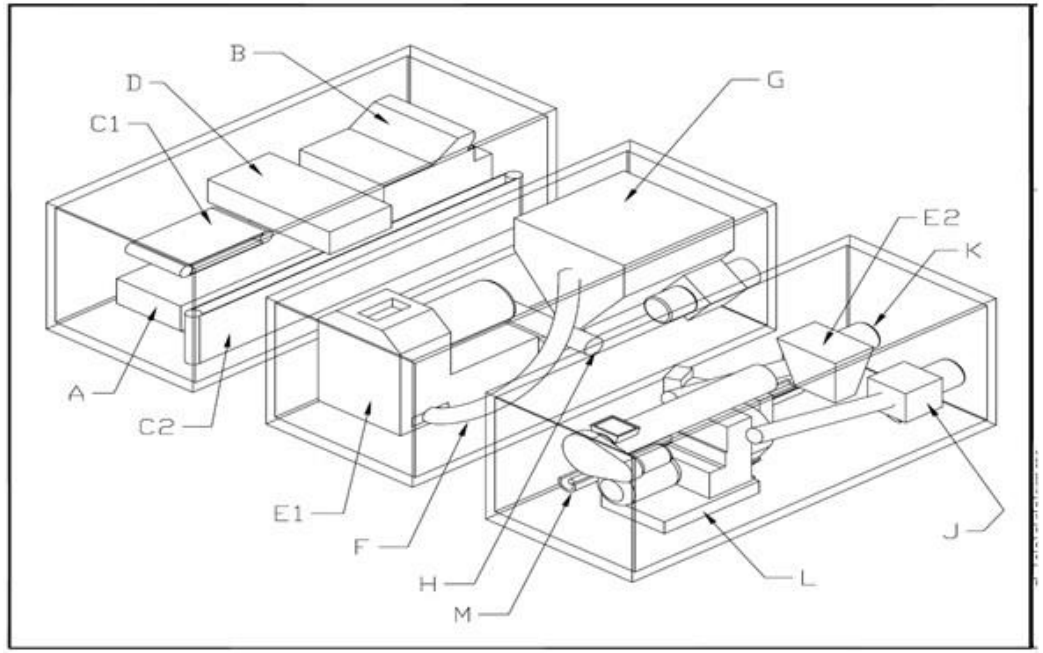

SERDP • ESTCP SYMPOSIUM
#SerdpEstcp2019

Project Overview (Cont'd): Waste Thermoplastics at FOBs

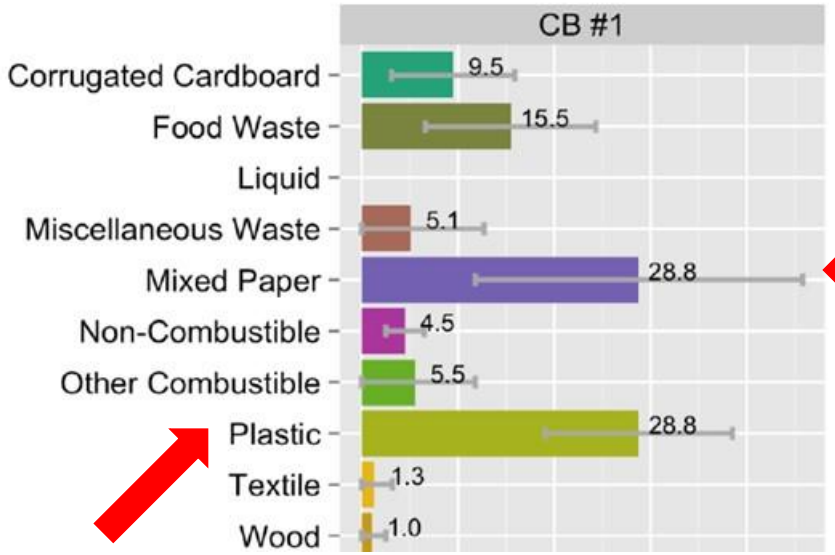

WASTE PLASTICS	CB #1	CB #2	CB #3	CB #4	CB #5	Wt Avg	% of Plastics Waste
#1- PET	10.6%	7.0%	5.5%	6.1%	3.2%	6.4%	40.00%
#2 - HDPE	5.0%	5.4%	4.2%	1.6%	1.6%	3.7%	23.13%
#3 - PVC	4.4%	0.7%	0.8%	0.5%	1.2%	0.7%	4.38%
#4 - LDPE/LLDPE	1.3%	2.8%	1.9%	3.1%	1.0%	2.8%	17.50%
#5 - PP	0.1%	0.2%	0.3%	0.2%	0.1%	0.2%	1.25%
#6 - PS	7.3%	2.2%	1.0%	1.2%	1.0%	1.6%	10.00%
#7 - other	0.1%	0.7%	0.4%	0.6%	0.5%	0.6%	3.75%
TOTAL	28.8%	19.0%	14.1%	13.3%	8.6%	16.0%	100.00%

- USARCENT conducted detailed analyses of FOBs waste streams*.
- rPET available is up to 0.5 lbs/person/day; 2000-person FOB will generate up to 1000 lbs /day; current AM technologies will consume only a small percent.
- Other applications & technologies that consume larger volumes of rPET are being developed - see SERDP Poster No. 249 displayed on 12/4/19.

* -US Army Central (USARCENT) Area of Responsibility (AOR) Contingency Base Waste Stream Analysis (CBWSA)," Report, March 2013

SERDP • ESTCP SYMPOSIUM
#SerdpEstcp2019

Project Overview (Cont'd) - Recycling of rPET

Recycling of PET is a mature industry stateside – commercial plants routinely convert 60 to 80 million lbs of bottles per year into products (including food grade pellets)

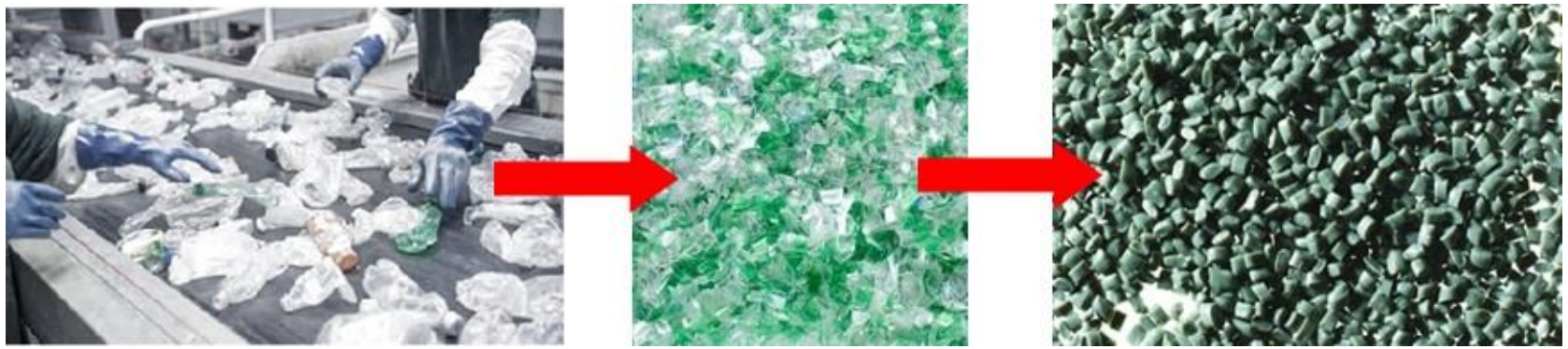

Project Focus

- Adapt existing technologies stateside to determine relevance at FOBs;
- Develop rPET formulations for specific products
- Modify equipment for agile manufacturing with constraints on logistical footprints and available utilities – install, ship and operate in 20-foot ISO containers
- Develop performance specifications for rPET products at FOBs

SERDP • ESTCP SYMPOSIUM
#SerdpEstcp2019

Recycling of Bottles into rPET formulations

- A 300 lbs/hour recycling line targeted for agile and modular manufacturing of rPET at FOBs
- Labels can *significantly complicate the steps needed for washing and sorting line*, equipment, and power requirements at FOBs
- Process flow diagrams (PFD) for recycling line has been developed to produce a consistent clean 4-mm flake from water bottles to work with or without labels as options

SERDP • ESTCP SYMPOSIUM
#SerdpEstcp2019

Filament Production with rPET for Additive Manufacturing (AM)

- Feasibility of using rPET for fused filament fabrication (FFF) and AM has been established by ARL's research work*
- Focus of project on filament production for agile manufacturing
- Material sourced from local commercial rPET recycling plant for characterization - *both reprocessed pellets and flakes used for trials*
- Developed typical 'data sheet' for rPET raw material pellets from injection molded ASTM specimens

rPET Data Sheet from Injection Molded Specimens

rPET Property	ASTM	Value	Std Deviation
Intrinsic Viscosity (IV)	D4603	0.7	
Specific Gravity	D792	1.333	0.005
Tensile Strength, psi	D638	7794	44
Tensile Modulus, ksi	D638	342	5
Tensile Elongation, %	D638	3.44	0.05
Heat Distortion Temperature	D648	139	+/- 0.36
Flexural Strength, psi	D790	11402	144
Flexural Modulus, ksi	D791	353	4.6
Flexural Strain at Yield,in/in	D792	0.0441	0.0002
Hardness Type D	D2240	77	N/A
Izod impact, ft-lb/in^2	D256	1.59	

* Zander, N. E. Gillan, M., and Lamberth, R. H., "Recycled polyethylene terephthalate as a new FFF feedstock material," Additive Manufacturing, 21 174-182, 2018

SERDP • ESTCP SYMPOSIUM
#SerdpEstcp2019

Filament Production for AM (Cont'd)

Filament from Fiber Spinning

- Two filament processes were evaluated using lab trials with different equipment vendors: Fiber spinning and traditional filament extrusion.
- Successfully made both 1.75mm and 2.85 mm filament with both processes.
- Fiber Spinning Results (exact equipment configuration and processing conditions are proprietary):
  - System would be compact and therefore lend itself to agile manufacturing in modules,
  - Quality of filament is very sensitive to speed, orifice diameter and temperature – which significantly affected the filament roundness
  - Ovality of the filament was higher than that would be acceptable for many commercially available 3D printers.
  - Process can only use rPET pellets; not feasible for use with rPET flakes

SERDP • ESTCP SYMPOSIUM
#SerdpEstcp2019

Filament Production for AM (Cont'd)

Traditional Filament Extrusion Trials:

- Normal extrusion temperature settings (used for ABS, etc) did not work; after a series of trials a unique and proprietary temperature profile was needed to manufacture rPET filament.
- Consistent diameter filament at *over 60 ft/minute (20 lbs/hour) with < 1.5% ovality.*
- Successfully made both 1.75mm and 2.85 using not only standard rPET pellets but more importantly clean 4mm flakes.
- Use of flake is an key accomplishment in developing a modular agile manufacturing system – as there is no need for a 'pelletizer'.
- Equipment size and configuration being specified based on these trials for installation and operation in modular 20-foot ISO containers.

SERDP • ESTCP SYMPOSIUM
#SerdpEstcp2019

Additive Manufacturing (AM) - Specifications for 3D printing

- rPET Filaments used in a variety of commercially available printers including:
  - Ultimaker 2 Extended+
  - Raised 3D (modified)
  - Lulzbot TAZ6
  - Lulzbot Pro (dual filament)
- Each printer required several trials to optimize the processing parameters for rPET materials – but all of them worked successfully.
- Based on trails recommendations being developed for rPET printing – especially for Lulzbots.
- Lulzbot Pro took ~2 hours to print a 4” x 4” x 0.125” plaque for ASTM tests.

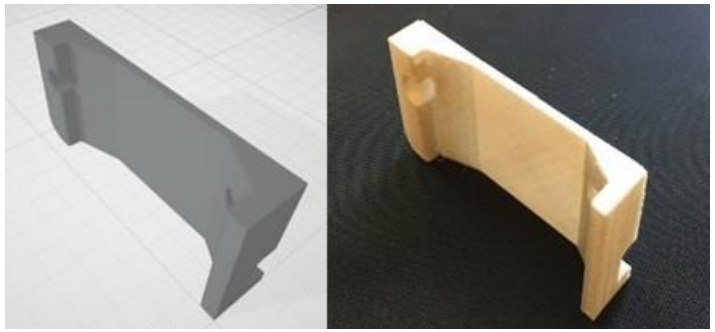

CAD Model and Bracket Printed with rPET filament

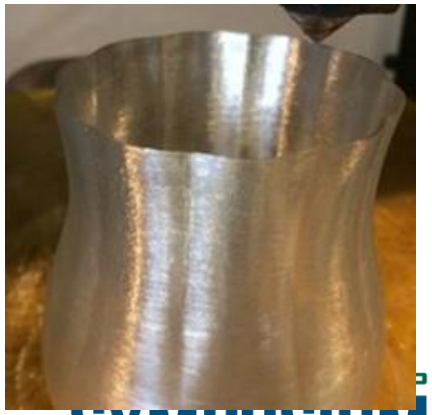

Evaluation of Properties – Applications for rPET components

- Evaluate properties of 3D printed ASTM specimens to compare with injection molded materials.
- All 3D specimens printed on Lulzbot Pro with optimized conditions.
- Tests planned:
  - ASTM D638 – Tensile
  - ASTM D790 – Flexure
  - ASTM D792 – Density
  - ASTM D256 – Izod
  - ASTM D648 – Heat Deflection
  - ASTM D2583 – Hardness
- Tensile properties for printed specimens lower than those for injection molded parts – <u>but still comparable to those for engineering plastics</u>.

ASTM D638 Tensile Specimen

Property	ASTM	rPET- Injection Molded		rPET - 3D Printed	
		Mean	Std Dev	Mean	Std Dev
Specific Gravity	D792	1.333	0.005	1.262	0.016
Tensile Strength, psi	D638	7794	44	4089	265
Tensile Modulus, ksi	D638	342	5	259	13.4
Tensile Elongation, %	D638	3.44	0.05	1.77	0.18

SERDP • ESTCP SYMPOSIUM
#SerdpEstcp2019

Evaluation of Properties (Cont'd) - rPET components

- Most replacement and repairs at FOBs would involve 'material substitution'.
- Existing part designed and made with a specific plastic would need to be replaced by 3D printed rPET component – may not be a one-for-one replacement.
- Material substitution project may require:
  - Material properties for rPET (physical, mechanical, thermal, and processing)
  - Re-design of component, if necessary
  - Modification of processing parameters to address tolerances
- Emc^2 team has developed, and has extensive experience in Product Design and Material Substitution Projects involved the Properties-Processing-Performance or the P^3 approach* using computer simulation.
- Feedback is currently being sought from US Army Corps and their contacts at FOBs for a list of potential components that need repair or replacement by the War Fighter – to Enhance Mission Effectiveness to address as example cases in this project.

* Krishnaswamy and others, " Reducing Cycle Time in Designing Polymeric Products Using Computer Simulation, SPE ANTEC Conference, 1995.

Conclusions to Date

- Research to date indicates that a PET bottle recycling line can be developed for FOBs to supply a consistent feedstock for AM.
- rPET flakes may be used to make AM printer filament on demand – with traditional equipment but modified temperature profiles.
- Filament production facility being designed for installation and operation in 20-foot ISO containers.
- Filament may be used with any commercially available printers with adjustment to printing parameters.
- Tensile properties for 3D printed specimens lower than those for injection molded.

Planned Work

- Complete design of PET bottle sorting and wash line for installation and operation in ISO containers
- Complete design of filament production unit for agile manufacturing
- Complete material characterization of 3D printed rPET specimens
- Develop design basis for rPET components to be printed at FOBs
- Prepare CAD drawings for agile manufacturing units for installation at FOBs

Schematic of Proposed Deliverables Targeted (CAD Drawings of Agile AM Plant for FOBs)

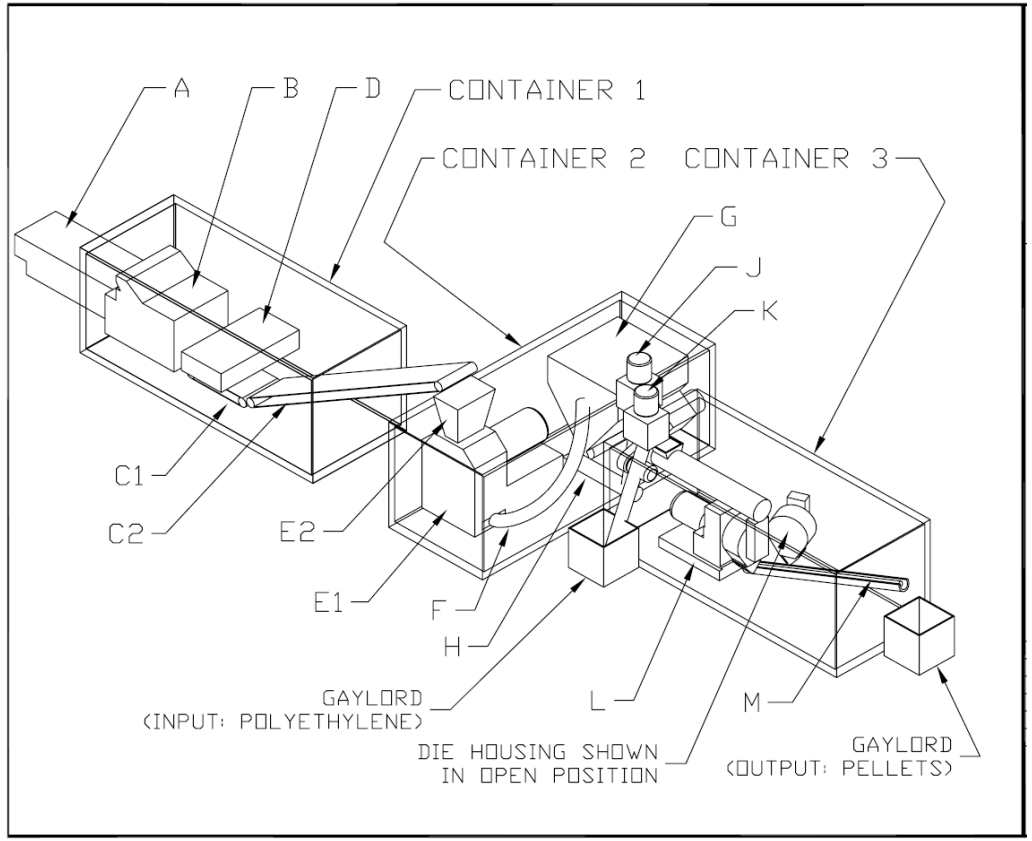

SERDP • ESTCP SYMPOSIUM
#SerdpEstcp2019

Questions?