EXECUTIVE SUMMARY

Elimination of Potassium Perchlorate from Armor-Piercing Incendiary Projectiles

ESTCP Project WP-201110

MARCH 2019

Distribution Statement A
This document has been cleared for public release

Page Intentionally Left Blank

This report was prepared under contract to the Department of Defense Environmental Security Technology Certification Program (ESTCP). The publication of this report does not indicate endorsement by the Department of Defense, nor should the contents be construed as reflecting the official policy or position of the Department of Defense. Reference herein to any specific commercial product, process, or service by trade name, trademark, manufacturer, or otherwise, does not necessarily constitute or imply its endorsement, recommendation, or favoring by the Department of Defense.

Page Intentionally Left Blank

EXECUTIVE SUMMARY

Project: WP-201110

TABLE OF CONTENTS

Page

1.0 INTRODUCTION 1
2.0 OBJECTIVES 3
3.0 TECHNOLOGY DESCRIPTION 5
4.0 PERFORMANCE ASSESSMENT 7
5.0 COST ASSESSMENT 11
5.1 CAPITAL AND RECURRING COSTS 11
5.2 COST ANALYSIS SUMMARY 11
6.0 IMPLEMENTATION ISSUES 13

LIST OF FIGURES

Page

Figure 1. Actual and Cross-sectional Diagrams of a .50 Caliber M8 API Cartridge. 5
Figure 2. Cross-section of Bullet Subcomponent of .50 Caliber APIs..... 5

LIST OF TABLES

Page

Table 1. Chemical Makeup of Perchlorate-free, Barium-free Candidate Incendiary Compositions. 7
Table 2. Tolerance of Ballistic Performance of Composition B1 to Flow Agent. 8
Table 3. 2nd Assembly Parameters for First Iteration of Phase 3 of Demonstration. 8
Table 4. Ballistic Qualification Test Summary for .50 Caliber Lots 1b, 2b, and 3b. 9
Table 5. Summary of Estimated Costs for Baseline and Alternative Processes. 11

Page Intentionally Left Blank

1.0 INTRODUCTION

Operations within the DoD have been significantly impacted by perchlorate regulation, since energetic materials containing perchlorate are used in many mission-critical applications. For instance, the manufacturing and demilitarization of perchlorate-based ammunition are two such operations that pose obvious contamination hazards. And of course, there is always the potential for secondhand contamination when munitions are deployed during training exercises, since most devices typically do not consume 100% of the ingredients. In addition, there are rare "duds" that fail to function during training which pose an additional risk since none of the objectionable ingredients have been consumed by a chemical reaction. To address these attendant environmental hazards, the DoD Perchlorate Policy mandates that military services comply with either the federal Environmental Protection Agency (EPA) or state perchlorate action level, whichever is more stringent. Because of this strict enforcement, some training ranges have been forced to close. Since realistic training is essential for troops preparing for combat operations, it is vital that water supplies adjacent to training ranges remain below the action levels for perchlorate and other contaminants.

To comply with strict environmental standards, the DoD has invested significant resources in the perchlorate-remediation of small arms ammunition (i.e. 20 -mm, and 40 -mm, and .50 caliber), many of which use perchlorate-based incendiary formulations to form an incandescent flash for marking an impact point or for igniting fuel vapors. IM-28 is an incendiary composition used in the Army and Navy's M8, M20, and Mk257 armor-piercing incendiary (API) bullets. This composition contains 10 wt. % perchlorate and approximately 12 grains are loaded into each round. Based on recent bullet acquisition history, this translates to over 170,000 lbs of potassium perchlorate used during manufacturing every five years. Because of this enormous perchlorate exposure during regular production, there is a vital need for an environmentally benign alternative to IM-28 capable of producing equal or superior performance.

Page Intentionally Left Blank

2.0 OBJECTIVES

The goal for this program was to replace IM-28 in the three above APIs with a suitable perchlorate-free and barium-free composition through system demonstration at the prime small caliber manufacturer, Lake City Army Ammunition Plant (LCAAP), a government-owned, company-operated (GOCO) facility. This goal was accomplished through a three-way teaming effort between Combat Capabilities Development Command – Armaments Center (CCDC AC), team lead, Naval Surface Warfare Center (NSWC Crane), and the LCAAP contractor. The government laboratories (CCDC AC and NSWC) collaborated on composition development, while the contractor operating LCAAP fabricated and demonstrated the candidate compositions in the full-up M8, M20, and Mk257 APIs. The final incendiary mixture contains perchlorate-free inorganic oxidizers, and meets or exceeds the incendiary performance of the in-service APIs.

Page Intentionally Left Blank

3.0 TECHNOLOGY DESCRIPTION

The perchlorate-free technology exists as a dry powder fitted inside the nose of each of the three API bullets (M8, M20, Mk257). Figure 1 is a schematic diagram of a full-up M8 API projectile round and is representative of all three APIs. The bullet containing the incendiary composition is sealed inside a brass cartridge equipped with a primer and propellant. Upon gun-fire, the primer detonates by a mechanical stimulus to initiate an explosive train. This train propagates through the propellant, projecting the bullet forward toward a target.

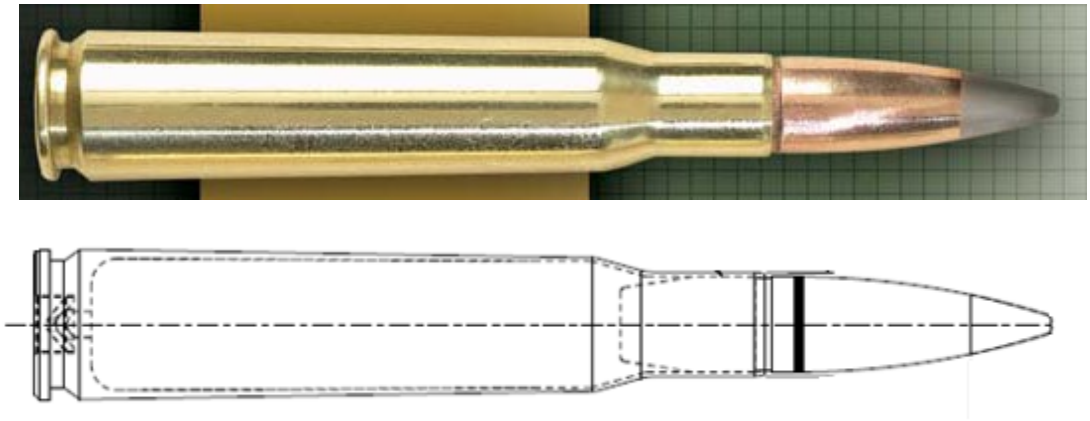

Figure 1. Actual and Cross-sectional Diagrams of a .50 Caliber M8 API Cartridge.

Figure 2 is a cross-sectional diagram of the bullet. The incendiary composition (IM-28) is charged into the outer bullet jacket **1**. The bullet core **2** is then seated inside **1** to condense IM-28 into pellet **3**. Upon impact with a target, **3** ignites to achieve an incandescent flash useful for igniting fuel vapors in armored vehicles, storage facilities, aircraft, and other targets. Also present at the rear of the projectile is tracer **4** (M20 and Mk257 only), which is ignited separately by the burning of the propellant.

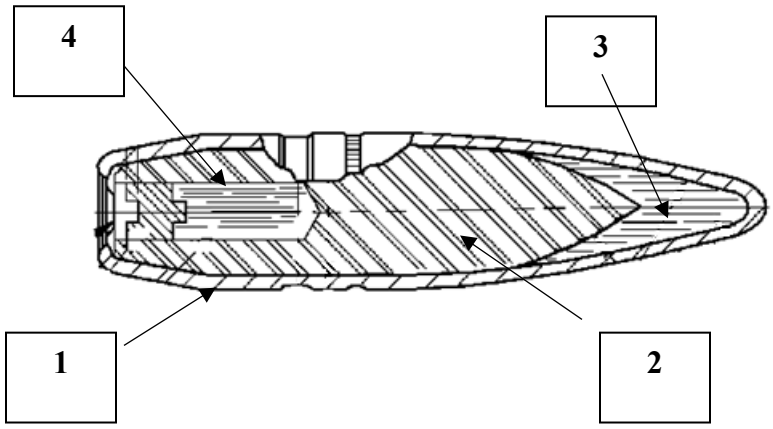

Figure 2. Cross-section of Bullet Subcomponent of .50 Caliber APIs.

At this point, a detailed description of the combustion of the incendiary mixture is needed. Incendiary pellet **3** undergoes combustion propagation via conductive and convective processes. These processes require the correct balance between powder consolidation (proximity between fuel and oxidizer particles) and open void space (to provide channels for convective currents to instantly eddy through the medium). This balance primarily is controlled through the bullet fabrication process. More specifically, this process can be tuned in production by two factors: 1) the amount of powder dispensed into a jacket, and 2) the displacement of the core from the top of the jacket after seating. Hereafter, these 2nd assembly parameters will be referred to as charge weight and core depth.

Our technology solution to the perchlorate problem is to substitute the potassium perchlorate and barium nitrate from IM-28 with alternate oxidizers and processing aids. A similar approach based on sodium nitrate has been proven out as a potential solution in the SERDP project WP-1424. The primary concern with this approach lies in the hygroscopicity of sodium nitrate. This oxidizer absorbs ambient moisture very readily even if used in conjunction with a processing aid, which could impact the long-term system reliability and performance. In addition, concerns had been raised by the operator of LCAAP regarding the manufacturability of the sodium nitrate technology in the humid summer weather at the manufacturer site (Independence, MO).

4.0 PERFORMANCE ASSESSMENT

The M8/M20/Mk257 requirements include system level ballistic performance with the following tests: incendiary flash, penetration, extraction, velocity, chamber pressure, accuracy, function/casualty, trace, and action time. The first two phases of demonstration at LCAAP used the M8 system platform, and focused on two performance parameters: incendiary flash, and penetration. In the third phase of the program, all the performance parameters listed above were tested using only one final candidate composition in all three system platforms (M8, M20, and Mk257) to meet manufacturability and qualification requirements.

Based on prior testing at the government laboratories, pyrotechnic incendiary compositions A1 and B1 were selected for initial demonstration at LCAAP (Table 1). More specifically, these two compositions were selected because they gave the best balance between burn time, brightness, and flash size/intensity. By the end of the first phase of demonstration at LCAAP, the program downselected to composition B1 based on ballistic performance, particularly during the Incendiary Flash and Penetration tests.

Table 1. Chemical Makeup of Perchlorate-free, Barium-free Candidate Incendiary Compositions.

	Percent Composition by Weight	
Ingredient	**A1**	**B1**
Magnalium (JAN-M-454, Type A)	60	60
Strontium Nitrate (Grade B, w/ Cabosil)	40	
Sodium metaperiodate (SMP)		40

After downselection, the next step was to evaluate the manufacturability of M8/Mk257 bullets derived from composition B1. Key to this optimization was the selection of proper additive for optimal flow to provide the best balance between the negatively correlated Incendiary Flash and Penetration tests. The initial approach during this second phase of the program was to execute another M8/Mk257 build where both calcium stearate and Cabosil™ flow agents would be evaluated at different percentages by weight of the total batch size, while keeping all other manufacturing settings constant. We chose to evaluate these bullet builds with 0.05, 0.02, and 0.01 wt. % for each flow agent for both M8 and Mk257 since these levels were common to regular production. This equated to a total of twelve .50 caliber bullet lots (Table 2) to be assembled and gunfire tested. All twelve lots were produced using an automatic powder charging bay, plus or minus 20 mg of the weight reported below in Table 2.

The ballistic testing of lots 1-12 shown in Table 2 revealed some clear correlations between flow agent content and performance. First, the penetration performance for batches based on calcium stearate trended higher with reduced stearate content. In addition, batches based on calcium stearate had generally better balance between Flash and Penetration and generally higher scores than those with Cabosil. Lastly, bullets derived from the one batch of B1 blended with 0.02 wt. % Cabosil (lots 5 and 11) passed the Accuracy test. This last observation was a sign that the different charge weights used for B1 in all our ballistic samples, compared to those generally used for IM-28 in regular production, would not produce a mass imbalance to negatively affect ballistics.

Table 2. Tolerance of Ballistic Performance of Composition B1 to Flow Agent.

Lot	Bullet Type	Flow Agent	Charge Weight (mg)	Flash	Penetration	Accuracy
1	M8	0.05% Ca stearate	725	Pass	Fail	-----
2	M8	0.02% Ca stearate	725	Pass	Pass	-----
3	M8	0.01% Ca stearate	725	Pass	Pass	-----
4	M8	0.05% Cabosil	725	Pass	Pass	-----
5	M8	0.02% Cabosil	725	Pass	Fail	Pass
6	M8	0.01% Cabosil	725	Pass	Pass	-----
7	Mk257	0.05% Ca stearate	765	Pass	Pass	-----
8	Mk257	0.02% Ca stearate	765	Pass	Pass	-----
9	Mk257	0.01% Ca stearate	765	Pass	Pass	-----
10	Mk257	0.05% Cabosil	765	Pass	Pass	-----
11	Mk257	0.02% Cabosil	765	Pass	Pass	Pass
12	Mk257	0.01% Cabosil	765	Pass	Pass	-----

This last test matrix that studied flow agent effects for composition B1 marked the end of Phase 2 of our demonstration. The final conclusions of this phase were as follows: 1) the final candidate composition can be safely handled in the automated assembly bays at LCAAP, 2) 2nd assembly parameters of charge weight and core depth were established for B1 in M8 and Mk257 bullets, and 3) flow agent studies of composition B1 established the optimal level of flow agent to be 0.01% calcium stearate by weight percentage of total batch size. This knowledge would be applied to the third and final phase of the demonstration where 4,000-round lots of M8, M20, and Mk257 APIs would be charged with composition B1 and subjected to a full gamut of system qualification tests.

At this point in the program, we had only been approved funding for demonstration in the M8 and Mk257 rounds. Coincidental with the successful completion of phase 2 was the receipt of additional funding from the ESTCP Program Office to expand the program scope to include the M20 API. Thus, the first step of phase 3 was to evaluate the performance of B1 in the M20 bullet since it had not been studied before: at the 300-round scale using the same 2nd assembly parameters established for Mk257, B1 passed the flash and penetration tests for M20. This gave rise to the climax of the program where the M8/M20/Mk257 lot sizes were increased from 300 rounds to 4,000 rounds. The 2nd assembly parameters for all three of these lots (1b, 2b, and 3b) are shown below in Table 3. The 2nd assembly process for lot 1b was performed on a different assembly bay than lots 2b and 3b since both have tracer components.

Table 3. 2nd Assembly Parameters for First Iteration of Phase 3 of Demonstration.

Lot	Type	Charge Wt. (mg)	Core Depth (0.001")
1b	M8	735 ± 20	86-88
2b	Mk257	765 ± 20	90-92
3b	M20	765 ± 20	90-92

Once the fabrication of full-up rounds for lots 1b, 2b, and 3b was complete, all three lots were subjected to the full spectrum of .50 caliber ballistic qualification testing. The results for all three of these lots are detailed below in Table 4. All three lots passed all ballistic tests to which they were subjected. This concluded the successful demonstration of the perchlorate-free incendiary composition in all three bullet platforms: M8, M20, and Mk257.

Table 4. Ballistic Qualification Test Summary for .50 Caliber Lots 1b, 2b, and 3b.

		1b	2b	3b
	Examination or Test			
1.	**Bullet extraction**	Pass	Pass	Pass
2.	**Accuracy**	Pass	Pass	Pass
3.	**Action time** (70 °F ± 2 °F)	Pass	Pass	Pass
4.	**Velocity** (70 °F ± 2 °F)	Pass	Pass	Pass
5.	**Chamber pressure** (70 °F ± 2 °F)	Pass	Pass	Pass
6.	**Function & Casualty**	Pass	Pass	Pass
7.	**Incendiary flash**	Pass	Pass	Pass
8.	**Penetration**	Pass	Pass	Pass
9.	**Trace**	N/A	Pass	Pass

Page Intentionally Left Blank

5.0 COST ASSESSMENT

In light of the success of this demonstration, the costs of implementation of the perchlorate-free technology were examined. The life cycle cost analysis presented herein compares the capital (one-time) and recurring (annual) costs of two alternate scenarios: 1) continued use of current perchlorate-containing incendiary bullets (baseline), and 2) transition to use of perchlorate-free bullets (alternative). To conduct the analysis, process parameters and cost information associated with the use of perchlorate-containing bullets were collected and analyzed. These parameters include: bullet procurement costs and quantities, material costs, environmental remediation costs, and demonstration/qualification costs.

The baseline scenario entails the continued use of perchlorate-containing M8, M20, and Mk257 API bullets. Cost analysis of this scenario assumes that the continued procurement of all three APIs will occur indefinitely through a private contractor. Therefore, the common cost categories considered by the DoD (e.g., equipment, labor, utilities, and Environment, Health, and Safety [EHS] costs) are included in the procurement quotes. These quotes were combined as a single recurring cost. On the other hand, the costs of perchlorate remediation were combined as a one-time capital cost.

The alternative scenario entails transition of a new, perchlorate-free incendiary composition into the current M8/M20/Mk257 production process. As was the case with the baseline scenario, the analysis of the alternative scenario included capital costs and recurring costs (procurement/ materials). The logistics of the alternative scenario align closely with those of the baseline since the perchlorate-free bullets will be manufactured by the private operator of LCAAP. Therefore, the same cost categories that were eliminated from DoD consideration (equipment, EHS, etc.) were also eliminated here. The capital costs analyzed for this report involve the analysis and certification of perchlorate-free bullets, as well as the cost of this demonstration. The recurring material costs are based on an estimate for the M8, M20, and Mk257 bullets.

5.1 CAPITAL AND RECURRING COSTS

The results of the above cost estimates were consolidated and are shown in Table 6.

Table 5. Summary of Estimated Costs for Baseline and Alternative Processes.

Bullet	Scenario	Capital Costs	Recurring Costs
M8	Baseline	$7,402,500	$40,900,000
M8	Perchlorate-Free	$2,000,000	$41,912,000
M20	Baseline	$7,402,500	$825,000
M20	Perchlorate-Free	$2,000,000	$845,000
Mk257	Baseline	$7,402,500	$825,000
Mk257	Perchlorate-Free	$2,000,000	$845,000

5.2 COST ANALYSIS SUMMARY

The cost analysis for perchlorate-free APIs resulted in various key findings and conclusions. First, the cost increase associated with perchlorate-free M8, M20, and Mk257 bullets is not significant compared

to the environmental remediation costs that attend the continued use of perchlorate-containing bullets. Material costs were determined to not be the cause of a price increase in the manufacturer's unit cost estimate. Instead, the price increase is presumably due to increased labor costs and other process-related factors. These may not be permanent increases if the LCAAP operator adjusts their processes to manufacture these bullets more efficiently. In summary, no significant cost increase is expected from a DoD-wide change to perchlorate-free M8, M20 and Mk257 incendiary bullets considering the cost benefits from the elimination of perchlorates.

6.0 IMPLEMENTATION ISSUES

Despite the high level of success of this program, there are a few items to address before the new composition is ready for implementation by relevant Program Managers. First and foremost, the new composition needs to be evaluated for safety, storage, and sensitivity by the US Army and Navy. This was originally part of the program scope but was traded for M20 system level testing at LCAAP during Phase 3. In addition to this safety testing, a military specification document (MIL-SPEC) needs to be written for sodium metaperiodate (SMP) and approved by all military services; this will ensure quality control for SMP and any items derived from the new composition. Lastly, additional system level testing leading to final hazard classification (FHC) will be needed for technology transfer to the system owner(s). Such testing would likely include bullet fabrication and testing of much larger lot sizes to be more representative of production.