# EXECUTIVE SUMMARY

## Anaerobic Membrane Bioreactor (AnMBR) for Sustainable Wastewater Treatment

## ESTCP Project ER-201434

DECEMBER 2018

***Distribution Statement A***
*This document has been cleared for public release*

*Page Intentionally Left Blank*

This report was prepared under contract to the Department of Defense Environmental Security Technology Certification Program (ESTCP). The publication of this report does not indicate endorsement by the Department of Defense, nor should the contents be construed as reflecting the official policy or position of the Department of Defense. Reference herein to any specific commercial product, process, or service by trade name, trademark, manufacturer, or otherwise, does not necessarily constitute or imply its endorsement, recommendation, or favoring by the Department of Defense.

*Page Intentionally Left Blank*

# EXECUTIVE SUMMARY

Project: ER-201434

## TABLE OF CONTENTS

**Page**


1.0 INTRODUCTION ..... 1
2.0 OBJECTIVES ..... 2
3.0 TECHNOLOGY DESCRIPTION ..... 3
3.1 GAS-SPARGED ANMBR PILOT SYSTEM ..... 3
3.2 GAC-FLUIDIZED ANMBR PILOT SYSTEM ..... 4
4.0 PERFORMANCE ASSESSMENT ..... 7
4.1 EFFECTIVENESS ..... 7
4.1.1 COD and $BOD_5$ ..... 7
4.1.2 Ammonia ..... 7
4.1.3 Total Phosphorus ..... 7
4.1.4 Total Sulfide ..... 7
4.1.5 Dissolved Methane ..... 8
4.2 NET ENERGY PRODUCTION EFFICIENCY ..... 8
4.3 IMPLEMENTABILITY ..... 8
4.3.1 Organic Loading Rate ..... 8
4.3.2 Hydraulic Residence Time ..... 9
4.3.3 Biosolids Production ..... 9
4.3.4 Membrane Flux ..... 9
4.3.5 Wastewater Temperature ..... 9
4.3.6 Dissolved Methane Removal Rate ..... 10
4.3.7 Clinoptilolite Robustness ..... 10
4.3.8 Membrane Performance ..... 10
4.3.9 Treated Water Quality with Respect to Various Water Reuse Alternatives ..... 11
4.3.10 Process Residuals ..... 11
5.0 COST ASSESSMENT ..... 13
5.1 COST ..... 13
5.2 LIFECYCLE ASSESSMENT ..... 13
6.0 IMPLEMENTATION ISSUES ..... 15
6.1 PROCESS CONFIGURATION ..... 15
6.2 OPERABILITY ..... 16

# LIST OF FIGURES

**Page**

Figure 1. Gas-sparged AnMBR schematic ..... 4
Figure 2. Gas-sparged AnMBR pilot system process flow diagram ..... 4
Figure 3. GAC-fluidized AnMBR pilot system ..... 4

# ACRONYMS AND ABBREVIATIONS

| | |
|---|---|
| AFBR | anaerobic fluidized-bed reactor |
| AFMBR | anaerobic fluidized-bed membrane bioreactor |
| AnMBR | Anaerobic Membrane Bioreactor |
| ANSI | American National Standards Institute |
| $BOD_5$ | biochemical oxygen demand |
| COD | chemical oxygen demand |
| d | day |
| DoD | Department of Defense |
| EPA | Environmental Protection Agency |
| FOG | fats, oil and grease |
| $g\ m^{-2}\ d^{-1}$ | grams per square meter per day |
| GAC | granular activated carbon |
| h | hour |
| HRT | hydraulic residence time |
| IX | Ion exchange |
| kWh | kilowatt hour(s) |
| L | liter |
| $L\ m^{-2}\ h^{-1}$ | liters per square meter per hour (see LMH) |
| LMH | liters per square meter per hour (see $L\ m^{-2}\ h^{-1}$) |
| m | meter |
| mg | milligram |
| mg-N/L | milligrams of nitrogen per liter |
| NSF | National Sanitation Foundation |
| SAF-MBR | staged anaerobic fluidized membrane bioreactor |
| T | temperature |
| TSS | total suspended solids |
| UF | ultrafiltration |
| VS | volatile solids |
| VSS | volatile suspended solids |

*Page Intentionally Left Blank*

# 1.0 INTRODUCTION

The Anaerobic Membrane Bioreactor (AnMBR) for Sustainable Wastewater Treatment project was conducted to demonstrate and validate the use of AnMBR technology for treatment of domestic wastewater. As part of the project, two pilot-scale AnMBR treatment systems were tested for over one year. These included a gas-sparged AnMBR and a granular activated carbon (GAC) fluidized AnMBR.

The Department of Defense (DoD) currently uses aerobic treatment processes, such as activated sludge and oxidation ponds, to treat domestic wastewater generated at DoD facilities. Some undesirable characteristics of these aerobic treatment processes are:

- Aerobic treatment processes have a high energy demand because they require aeration to oxidize organic material in the wastewater.
- Aerobic treatment processes generate a significant amount of sludge.
- Aerobic treatment processes do not recover the inherent energy contained in the wastewater.

An alternative to conventional aerobic treatment processes is anaerobic treatment, which has the following benefits:

- Anaerobic treatment processes do not require aeration to oxidize organic material in the wastewater, so they have a lower energy demand versus aerobic processes.
- Anaerobic treatment processes produce less sludge than aerobic processes.
- Anaerobic treatment processes produce methane-rich biogas that can be used to generate electricity, heat, or vehicle fuel. The energy content of the biogas can potentially offset the energy used by the treatment process, making the process energy-neutral or energy-positive (i.e., does not require a net input of energy).

One type of anaerobic treatment process that is of particular interest for implementation at DoD facilities is the AnMBR treatment process. In addition to the benefits described above, this process produces an effluent that can meet reuse standards, such as American National Standards Institute (ANSI)/National Sanitation Foundation (NSF) 350 for five-day biochemical oxygen demand ($BOD_5$) and total suspended solids (TSS). Therefore, implementation of this treatment technology could increase the amount of water recycled at DoD facilities while also decreasing the operational costs of wastewater treatment at DoD facilities.

However, there are certain unknowns regarding the ability of the AnMBR treatment technology to reliably treat domestic sewage for various reuse applications in an energy-neutral manner. Also, AnMBR technology has not been tested at any DoD installations. Therefore, this demonstration was conducted to determine whether AnMBR technology can meet DoD requirements and can operate successfully on a domestic wastewater application.

## 2.0 OBJECTIVES

The primary objective of this pilot-scale project was to demonstrate and validate AnMBR technology for domestic wastewater treatment. Specific objectives associated with this project include:

- Demonstrate the effectiveness of AnMBR at treating screened domestic wastewater at temperatures above 10°C to produce high-quality, re-usable water.
- Determine a lower applicable temperature limit for AnMBR technology that can be used to identify appropriate implementation sites.
- Demonstrate that AnMBR technology for domestic wastewater treatment can be operated in an energy-neutral manner.
- Demonstrate use of the technology in a treatment train that can effectively remove nitrogen and phosphorus nutrients and sulfide (when necessary) in tandem with carbonaceous $BOD_5$ and TSS.
- Demonstrate that hollow-fiber gas transfer membrane technology can effectively recover dissolved methane from AnMBR permeate.
- Demonstrate that the AnMBR minimizes sludge production and determine whether the sludge that is produced can be used beneficially as biosolids.
- Demonstrate that the AnMBR is a safe technology that is implementable at DoD installations and public utilities.
- Compare cost and performance of a gas-sparged AnMBR to a GAC-fluidized AnMBR.
- Compare cost and performance of gas-sparged and GAC-fluidized AnMBRs to conventional aerobic wastewater treatment systems.
- Conduct a simplified lifecycle assessment of the technology in comparison to conventional technologies.

# 3.0 TECHNOLOGY DESCRIPTION

AnMBR technology is the marriage of anaerobic biological treatment and physical membrane separation. There are several different configurations of the AnMBR system. The various configurations differ in regard to the location of the membranes and the method of membrane flux maintenance. The membranes can be located in either the primary bioreactor or in a secondary and separate membrane bioreactor. Both pilot systems included in this demonstration had an external secondary membrane bioreactor. The main elements of the AnMBR system are a primary anaerobic bioreactor and a secondary membrane bioreactor.

The primary anaerobic bioreactor contains microorganisms that convert organic carbon and associated $BOD_5$ in wastewater into an energy-rich biogas containing methane and carbon dioxide. This conversion involves multiple steps, including disintegration, hydrolysis, fermentation, and methanogenesis. The biogas produced in the primary anaerobic bioreactor can be used to generate electricity, heat, or fuel for vehicles.

The secondary membrane bioreactor contains ultrafiltration (UF) membranes that separate the microorganisms and other suspended solids from the treated effluent (permeate). This physical separation process serves to 1) maintain a high mixed liquor of volatile suspended solids (VSS) concentration in the bioreactor, and 2) produce a suspended solids-free permeate.

The pilot systems included in this demonstration used different methods of UF membrane flux maintenance. One pilot system used gas-sparging, and the other pilot system used GAC fluidization. The configurations of the two pilot systems are described in more detail below.

## 3.1 GAS-SPARGED ANMBR PILOT SYSTEM

The pilot system that was demonstrated consisted of four main process units, including:

- Gas-sparged AnMBR for removal of dissolved organics and suspended solids.
- Hollow-fiber gas transfer membrane for removal of dissolved methane.
- A coagulation-flocculation-sedimentation system for removal of sulfide and phosphorus.
- Ion exchange (IX) system for removal of ammonia.

A schematic of the gas-sparged AnMBR unit operation is shown in Figure 1. The process consisted of a primary anaerobic bioreactor and a secondary membrane bioreactor. Wastewater was pumped into the primary anaerobic bioreactor, which contained microorganisms that convert organic carbon into biogas. The contents of the primary bioreactor were circulated continuously through the secondary membrane bioreactor, which contained hollow-fiber UF membrane modules. The membranes were used to separate microorganisms and other suspended material from the treated effluent (permeate), which was pulled through the membrane by means of a permeate pump. The biogas produced in the bioreactor was either exhausted from the system or blown into the bottom of the secondary membrane bioreactor, where it bubbled up past the membranes to the top of the tank. This process, called sparging, helped keep suspended solids that in part cause membrane fouling from building up on the membranes. Biogas that was exhausted from the system could be used to generate electricity, heat, or fuel for vehicles. The permeate from the secondary membrane

bioreactor was conveyed downstream for further treatment by additional processes (Figure 2) that included removal of dissolved methane, sulfide, phosphate, and ammonia.

**Figure 1. Gas-sparged AnMBR schematic**

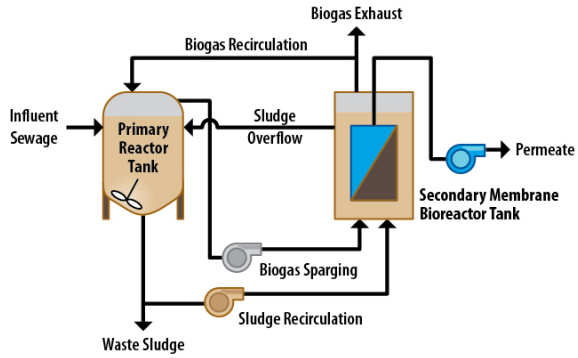


**Figure 2. Gas-sparged AnMBR pilot system process flow diagram**

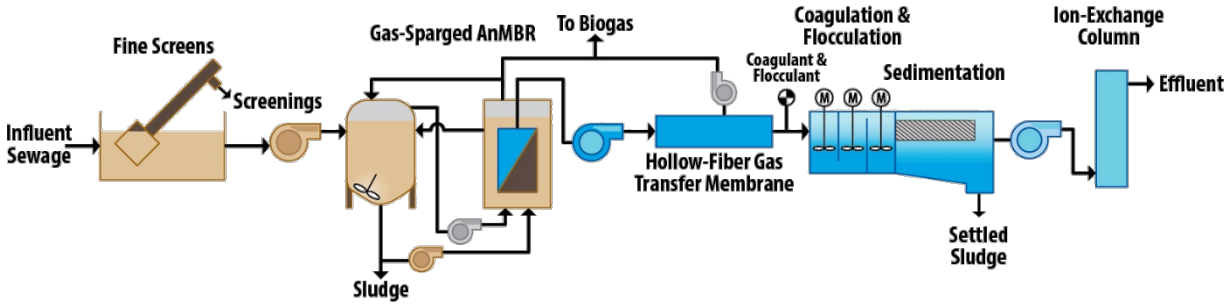


## 3.2 GAC-FLUIDIZED ANMBR PILOT SYSTEM

A process flow diagram of the GAC-fluidized AnMBR system is shown in Figure 3. This system consisted of two bioreactors. The first is an anaerobic fluidized-bed reactor (AFBR), which is followed by an anaerobic fluidized-bed membrane bioreactor (AFMBR). The two bioreactors are collectively referred to as the staged anaerobic fluidized membrane bioreactor (SAF-MBR).

**Figure 3. GAC-fluidized AnMBR pilot system**

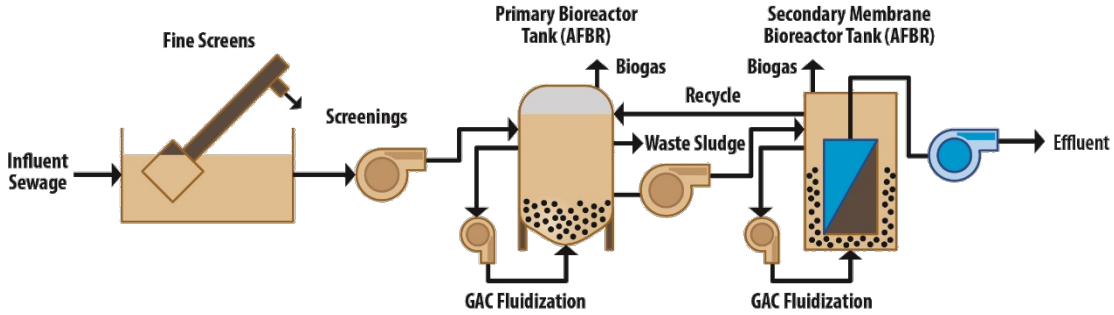

Wastewater was pumped into the AFBR, which contained active microorganisms and GAC media, the latter serving as a support media for the microorganisms. The AFBR was also equipped with a recirculation pump to keep the GAC fluidized. The AFBR provided partial treatment of the wastewater, converting the organic carbon into biogas. After treatment in the AFBR, the partially treated wastewater was pumped to the AFMBR, which contained active microorganisms, GAC particles that serve as a support media for the microorganisms, and ultrafiltration membranes. Inside the AFMBR, the wastewater was further treated, and the membranes separated the treated effluent from the microorganisms and other suspended materials in the wastewater. Recirculation between the two reactors was also conducted to promote better solids hydrolysis.

As in the AFBR, the liquid contents of the AFMBR were recirculated continuously from the top of the reactor to the bottom. But here, the fluidized GAC particles came into contact with the membranes. The physical movement of the GAC particles against the membranes helped to keep the membranes clean and reduce membrane fouling. Thus, the GAC-fluidized AnMBR is a unique membrane bioreactor system that employs a novel, energy-efficient approach for control of membrane fouling.

*Page Intentionally Left Blank*

# 4.0 PERFORMANCE ASSESSMENT

Performance of the AnMBR systems was evaluated with respect to effectiveness, net energy production efficiency, and implementability. The effectiveness of the AnMBR technology was assessed with respect to treated water quality. The success was assessed through a comparison of water quality parameters to U.S. Environmental Protection Agency (EPA) secondary treatment standards, published criteria for water reuse, and other applicable metrics. Primary performance objectives are discussed here. Additional objectives are discussed in the main report.

## 4.1 EFFECTIVENESS

### 4.1.1 COD and $BOD_5$

The average effluent chemical oxygen demand (COD) concentration in the gas-sparged AnMBR was 58±27 mg/L, which is about equal to the performance objective of 60 mg/L. The average COD removal was 90±4%. The average effluent COD concentration in the GAC-fluidized AnMBR was 29±9 mg/L, which is less than the performance objective. The average COD removal was 86±3%.

The average effluent $BOD_5$ concentration in the gas-sparged AnMBR was 25±12 mg/L, which is less than the performance objective of 30 mg/L but greater than the reuse objective of 10 mg/L. The average $BOD_5$ removal was 89±5%. The average effluent $BOD_5$ concentrations in the GAC fluidized AnMBR was 15±9 mg/L, which is less than the performance objective of 30 mg/L and greater than the re-use objective of 10 mg/L. The average $BOD_5$ removal was 85±7%.

Fine screening was the only form of primary treatment used in this demonstration. Primary sedimentation may have resulted in even lower effluent concentrations and potentially less than 10 mg/L $BOD_5$.

### 4.1.2 Ammonia

The ammonia removal by the clinoptilolite column prior to breakthrough was 99.9±0.1%, which is greater than the performance objective of 90%. The influent and effluent ammonia concentrations were 37±4 and 0.05±0.05 milligrams of nitrogen per liter (mg-N/L), respectively.

### 4.1.3 Total Phosphorus

Total phosphorus was reduced from 7.0±2.9 mg/L in the screened gas-sparged AnMBR influent to 0.43±0.29 mg/L in the clinoptilolite effluent for an overall removal of 94±3%, which was greater than the performance objective of 90%.

### 4.1.4 Total Sulfide

Sulfide was reduced from 27±5 to 0.7±1.7 mg/L by chemical coagulation. The median and minimum effluent concentrations were 0.10 and 0.04 mg/L, respectively. Overall sulfide removal, including the elevated values, was 99±2%. While the median sulfide concentration met the performance objective of 0.1 mg/L, the average concentration did not. Further optimization of the coagulation system would likely have improved the performance leading to attainment of the

performance objective. The performance objective may be too stringent for certain applications in which the performance would then be deemed to be acceptable.

#### 4.1.5 Dissolved Methane

The average dissolved methane removal by a gas-liquid membrane contactor under optimized conditions was 79±2%, which was not greater than the performance objective of 90%. The influent dissolved methane concentration for these tests was 13±2 mg/L.

### 4.2 NET ENERGY PRODUCTION EFFICIENCY

Energy consumption and production were calculated for a matrix of operating scenarios that included various net permeate fluxes and temperatures for the gas-sparged and GAC-fluidized AnMBRs. Temperature was an important factor because the total methane yield was observed to be greater at elevated temperatures. Energy-neutral or -positive operation was estimated for some but not all of these scenarios. In general, energy-neutral or -positive operation was more likely at greater flux, temperature, and influent COD concentration. At the average observed flux for the gas-sparged AnMBR (7.6 liters per square meter per hour [LMH or L $m^{-2}$ $h^{-1}$]), the ratio of energy produced:energy consumed was 60% for T < 20°C and 84% for T > 25°C (COD = 620 mg/L). At the maximum flux (14 LMH), the ratio was 100% for T < 20°C and 140% for T > 25°C. At the average flux for the GAC-fluidized AnMBR (7.9 LMH) and without supplemental COD (COD = 210 mg/L), the ratio was 55% for T < 20°C and 90% for T > 25°C. If the influent COD was greater (390 mg/L), the ratio at an average flux would be 77% for T < 20°C and 130% for T > 25°C. Therefore, the performance objective of energy neutrality was met by both systems under certain conditions.

While energy neutrality may not be possible under all conditions, decreasing the net energy consumption relative to conventional activated sludge can more likely be achieved. Gas-sparged AnMBR operating conditions at high flux and low sparge rates were more likely to result in net energy consumption less than 0.3 to 0.6 kWh/$m^3$, which is typical for conventional wastewater treatment plants. All GAC-fluidized AnMBR operating conditions resulted in net energy consumption less than that for conventional wastewater treatment plants. These results suggest the prospect of energy reduction using AnMBR processes in place of conventional activated sludge technologies is promising.

### 4.3 IMPLEMENTABILITY

#### 4.3.1 Organic Loading Rate

The average organic loading rate in the gas-sparged AnMBR was 1.3±0.5 kg-COD $m^{-3}$ $d^{-1}$, which is greater than the performance objective of 0.6 kg-COD $m^{-3}$ $d^{-1}$. The average organic loading rate in the GAC-fluidized AnMBR without COD supplementation was 1.4±0.5 kg-COD $m^{-3}$ $d^{-1}$, which is greater than the performance and similar to the rate for the gas-sparged AnMBR. The organic loading rates of both AnMBRs were similar because both the hydraulic residence time and the influent COD for the gas-sparged AnMBR were greater than for the GAC-fluidized AnMBR.

### 4.3.2 Hydraulic Residence Time

The average hydraulic residence time (HRT) for the gas-sparged AnMBR was 11±3 hours (h), which is less than the performance objective of 20 h. The average HRT for the GAC-fluidized AnMBR was 3.9±1.0 h, which is less than the performance objective of 20 h and 65% less than the average hydraulic residence time for the gas-sparged AnMBR.

### 4.3.3 Biosolids Production

The volatile solids (VS) generation per unit mass loaded COD for each AnMBR system was calculated and compared to the performance objective of 0.2 grams volatile solids per gram COD loaded (g-VS/g-$COD_{loaded}$). The results were 0.074 and 0.13 g-VS/g-$COD_{loaded}$ for the gas-sparged and GAC-fluidized AnMBR. Both of these values met the performance objective. The value for the gas-sparged AnMBR may be underestimated in part because of solids settling in the bioreactor and incomplete recovery. On the other hand, the greater solids residence time (60±27 days [d] versus 11±5 d calculated for suspended/non-biofilm solids only) in the gas-sparged AnMBR could have led to greater hydrolysis and a lower value.

### 4.3.4 Membrane Flux

The average net flux of the gas-sparged AnMBR for the entire demonstration, excluding periods of mechanical shutdown and COD overloading, was 7.6±1.6 LMH. This flux was greater than the goal of 6 LMH. The maximum net flux was 14 LMH. The average net flux of the GAC-fluidized AnMBR for the entire demonstration, excluding periods of mechanical shutdown, reactor upsets, and COD supplementation, was 7.9±2.2 LMH. This flux was greater than the goal of 6 LMH. The maximum net flux was 12 LMH.

Overall, the gas-sparged AnMBR ultrafiltration process demonstrated greater resilience in response to elevated concentrations of solids and colloidal organics. However, both systems demonstrated instability (i.e., variable permeability over time), which was attributable not only to varying operational conditions and mechanical upsets but also to differences in membrane performance caused by the different methods of fouling management (i.e., variable biogas sparging versus constant GAC fluidization). Inconsistent and insufficient maintenance cleaning also likely contributed to these instabilities.

### 4.3.5 Wastewater Temperature

The intent of this performance objective was to demonstrate attainment of effectiveness at temperatures ≥ 10°C. The COD and $BOD_5$ removals in the gas-sparged AnMBR did not decrease with decreasing temperatures between 15 and 30°C. The performance with respect to COD and $BOD_5$ removal below 15°C could not be evaluated because ambient wastewater temperatures did not go that low. COD and $BOD_5$ permeate concentrations did not increase as temperatures decreased between 15 and 30°C. In the GAC-fluidized AnMBR, COD and $BOD_5$ removals did not decrease and the permeate concentrations did not increase as temperatures decreased between 15 and 30°C. The period of time when temperatures were between 10 and 15°C was concurrent with a process upset resulting from an inadvertent pump reversal. When non-upset data are evaluated, only three data points between 14.0 and 14.8°C exist, and they do not indicate a trend of changing

performance with temperature. Therefore, insufficient data exist to evaluate performance of the GAC-fluidized AnMBR at temperatures < 15°C.

### 4.3.6 Dissolved Methane Removal Rate

This performance objective is important with respect to the capital cost and replacement cost of gas-liquid membrane contactors for dissolved methane removal. The performance objective for methane flux was 0.5 grams per square meter per day (g $m^{-2}$ $d^{-1}$) and the observed flux was 6.5±1.8 g $m^{-2}$ $d^{-1}$. If two contactors had been installed in series, thereby doubling the membrane area to achieve the 90% removal objective, the performance objective for flux would still have been met.

### 4.3.7 Clinoptilolite Robustness

Robustness was quantified with respect to the variation on ammonia loading over multiple regeneration cycles. No decrease in the ammonia loading over multiple sorption/regeneration cycles would indicate good robustness. Two regeneration cycles were conducted, and the loading decreased by 21 to 50% compared to the performance objective of 10%. The second regeneration did not result in further decreases in ammonia loading suggesting robustness after the initial sorption/regeneration cycle, but additional loading/regeneration cycles would be required to validate this hypothesis. Therefore, the conclusion is that the performance objective for robustness was not met, but this conclusion is based on limited testing.

### 4.3.8 Membrane Performance

Primary conclusions based on membrane performance and post-demonstration analyses are:

- Permeability of both sets of membranes started high and then decreased by about ten-fold over the period of over one year of operation. However, permeability of the gas-sparged membranes was similar or greater than of the GAC-fluidized membranes even though concentrations of suspended solids and colloidal organics were much greater in the gas-sparged AnMBR.
- Maintenance cleaning in both systems was insufficient and contributed to the decreases in permeability.
- Increasing the biogas sparge rate in the gas-sparged AnMBR resulted in increased permeability, though at an increased energy cost. Such modification of permeability is not possible in the GAC-fluidized AnMBR system.
- Membrane foulants on the membranes included both organics (e.g., biofilm) and inorganics (clay-like materials likely associated with the wastewater influent). Primary sedimentation could reduce the amount of inorganic fouling of the membranes. In addition, the GAC fluidized AnMBR membranes were coated with elemental carbon. The carbon may have deposited through the demonstration or following the upset condition, when GAC was ground in the recirculation pumps.
- Membrane abrasion was much greater in the GAC-fluidized AnMBR compared to gas-sparged AnMBR. The membrane lifetime in the gas-sparged AnMBR is estimated to be on the order of ten years or more based on historical operation of aerobic membrane bioreactors with the same membranes. The GAC-fluidized AnMBR membranes are likely to have a much shorter lifetime.

- These results suggest membrane performance in the gas-sparged AnMBR was more robust and flexible than in the GAC-fluidized AnMBR, though energy requirements for gas sparging are greater than those for GAC-fluidization.

### 4.3.9 Treated Water Quality with Respect to Various Water Reuse Alternatives

Water quality data suggest the treated water is potentially suitable for surface water discharge, depending on local regulatory requirements and a variety of re-use opportunities, including toilet flushing, irrigation, dust suppression, etc. The treated water would require additional treatment for indirect potable reuse, such as ozone-biofiltration or full-advanced treatment using reverse osmosis.

### 4.3.10 Process Residuals

Biosolids and coagulation-flocculation-sedimentation sludge from the gas-sparged AnMBR process were characterized and compared to regulatory requirements for land application of biosolids. The biosolids met criteria for class B biosolids with respect to fecal coliforms and class A biosolids with respect to metals. It did not meet class A criteria with respect to concentrations of enteric viruses and *Salmonella*. Therefore, the biosolids meet class B requirements with respect to pathogens. Class A could be met if primary sedimentation and anaerobic digestion were added to the process. Coagulation sludge contained phosphorus that has potential use as a fertilizer and contained appreciable phosphorus, sulfur, iron and aluminum. Further studies would be necessary to determine whether the phosphorus and sulfur are agriculturally available, considering it was coagulated with iron and aluminum coagulants. Dewatering of both residuals was evaluated. The biosolids required more polymer for dewatering than the chemical sludge but was still capable of attaining a solids content of 16%.

*Page Intentionally Left Blank*

# 5.0 COST ASSESSMENT

## 5.1 COST

The AnMBR process has the potential to be cost-competitive with conventional treatment considering the possibility of energy-positive operation. The application of a hybrid process involving a GAC-fluidized bioreactor followed by a gas-sparged UF membrane process and a low cost process for dissolved methane removal appears to be promising. Alternative methods for sulfide removal such as biological oxidation should be evaluated because chemical coagulation is likely to be cost-prohibitive. Membrane replacement costs and chemical costs for membrane cleaning also must be considered. The actual lifetime of UF membranes in an AnMBR is unknown; however, gas-sparged UF membrane lifetime is expected to be ten years or more based on experience with aerobic membrane bioreactors using the same membranes. Chemical use for membrane maintenance and recovery cleaning should be considered and optimized. Implementation of the AnMBR process in warmer climates and on relatively strong wastewater streams would increase the potential for even more energy-positive operation and overall cost reduction. Finally, the AnMBR is a new process that has not had years of operational experience like conventional treatment processes. Therefore, it is not unexpected that estimated AnMBR costs are greater than conventional treatment costs. Nevertheless, the potential for cost reduction exists and can be realized through process modification and implementation. Full-scale implementation on smaller distributed systems is a logical first step.

## 5.2 LIFECYCLE ASSESSMENT

In general, conventional treatment had the lowest overall environmental impact, followed by primary sedimentation in combination with a hybrid AnMBR comprised of a GAC-fluidized bioreactor, a gas-sparged UF membrane, a vacuum degasser for dissolved methane removal, and chemical coagulation for sulfide and phosphorus removal. The $CO_{2eq}$ offsets from electricity and heat generated had a strong influence on overall environmental impact contributions from the AnMBR process; however, the chemical use associated with sulfide and phosphorus removal process resulted in greater environmental impact than did conventional treatment. The sensitivity analysis indicated that the sulfide and phosphorous removal component of the AnMBR treatment processes contributes at least 70% to overall environmental impact contributions, compared to at least 24% as a component of conventional treatment. Chemical consumption during sulfide and phosphorous removal are the primary environmental impact drivers. Considering that sulfide is probably more of a driver of chemical use than phosphorus (and that phosphorus removal may not always be necessary), alternative methods such as biological sulfide oxidation should be explored. Integration of alternative methods for sulfide removal alongside bioenergy recovery is necessary for developing an AnMBR treatment process that is more sustainable than a conventional treatment approach.

*Page Intentionally Left Blank*

# 6.0 IMPLEMENTATION ISSUES

## 6.1 PROCESS CONFIGURATION

The results of this demonstration and economic analysis support use of primary sedimentation followed by a bioreactor and a gas-sparged UF membrane system. Inclusion of primary sedimentation in the process is projected to provide a greater potential for energy-neutral or energy-positive operation. In addition, the potential for membrane fouling – particularly by fats, oil and grease (FOG) – will be reduced.

The bioreactor may be either a suspended growth bioreactor or a GAC-fluidized bioreactor. However, the first-stage GAC-fluidized bioreactor was demonstrated to require a shorter HRT and produce better effluent quality than the first stage suspended growth bioreactor. The GAC fluidized bioreactor – being a fixed film system – will also be more resilient to process upsets based on previous research and experience comparing fixed film and suspended growth wastewater treatment systems.

Based on the results of this demonstration, the recommendation is to use a hybrid AnMBR comprised of a GAC-fluidized bioreactor followed by gas-sparged UF membranes. GAC-fluidized membrane integrity was demonstrated in this and previous studies to be severely compromised by GAC-abrasion and the lifetime of these membranes would be much shorter than that of gas-sparged UF membranes. Additionally, the GAC-fluidized UF membranes require lower packing density than gas-sparged UF membranes, are not commercially available, and are likely to be more expensive.

Dissolved methane removal using vacuum-operated membrane contactors was determined to have potential of removing 90% dissolved methane, but the pressure loss through the contactors will result in high energy consumption. Therefore, alternative dissolved methane removal technologies, such as vacuum degassers, warrant evaluation. They have the potential for low-cost and low-energy consumption.

Sulfide must be removed prior to discharge or reuse. If it is not removed, it can lead to several problems including: 1) oxidization to sulfur and fouling of process piping, 2) contribution to oxygen demand and generation of turbidity (from the generated elemental sulfur) upon discharge to surface water, and 3) toxicity and noxious odors precluding many reuse opportunities. Phosphorus may need to be removed in the case of surface water discharge depending on local regulatory requirements. Coagulation-flocculation-sedimentation is a standard process and was demonstrated to be capable of sulfide and total phosphorus removal. Use of the sedimentation solids as a fertilizer is possible but requires further study to determine plant uptake. Chemical cost and environmental impact associated with sulfide removal were determined to be high. Alternative sulfide removal technologies, such as biological sulfide oxidation, may also be effective and less expensive. Further research into cost-effective and sustainable technologies for sulfide and phosphorus removal is recommended.

Nitrogen removal requires further evaluation. Clinoptilolite was capable of removing ammonia in this demonstration, but the brine was not capable of being regenerated. Use of regenerable

clinoptilolite downstream of an AnMBR is being evaluated further in ESTCP project ER-201728. Other options for nitrogen removal have also been evaluated and should be considered.

Water reuse is an option and may require additional treatment depending on the specific end use.

## 6.2 OPERABILITY

Operability includes various aspects including plant reliability, permit compliance, and operator skill level and certification requirements. The plant must be reliable and capable of consistently meeting discharge requirements to remain in compliance with permits. AnMBRs have clearly not been in existence as long as oxidation ditch and activated sludge technologies. Therefore, a track record is not available to assess reliability. This demonstration indicated that upset conditions can occur, but this is the case at conventional treatment plants as well. Further demonstrations of AnMBRs are necessary to provide such a track record of reliability.

Operator skill level and certification requirements associated with a plant's permit may be increased compared to a conventional plant. This has been the case when conventional plants have been upgraded to *aerobic* MBRs or anaerobic digesters are installed at an existing facility. These requirements are not necessarily impediments but must be considered.