Thank you for signing in early

The webinar will begin promptly at
12:00 pm ET, 9:00 am PT

SERDP DOD • EPA • DOE | ESTCP

SERDP and ESTCP Webinar Series

- The webinar will begin promptly at 12:00 pm ET, 9:00 am PT
- Two options for accessing the webinar audio
  - Listen to the broadcast audio if your computer is equipped with speakers
  - Call into the conference line
    - (669) 900-6833 or (929) 205-6099
    - Required webinar ID: 710-593-184
- For questions or technical issues, please email serdp-estcp@noblis.org or call 571-372-6565

Utilization of Advanced Conservation Voltage Reduction for Energy Reduction on DoD Installations

February 21, 2019

SERDP DOD • EPA • DOE | ESTCP

Welcome and Introductions

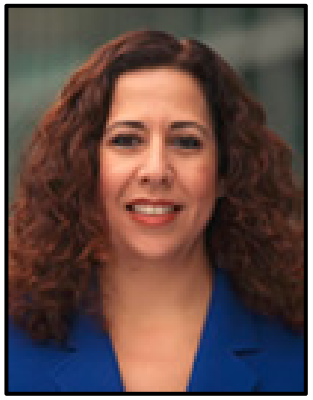

Rula A. Deeb, Ph.D.
Webinar Coordinator

SERDP DOD • EPA • DOE | ESTCP

Webinar Agenda

- **Webinar Logistics** (5 minutes)
  Dr. Rula Deeb, Geosyntec Consultants
- **Overview of SERDP and ESTCP** (5 minutes)
  Mr. Timothy Tetreault, SERDP and ESTCP
- **Advanced Conservation Voltage Reduction: A Department of Defense Perspective** (15 minutes + Q&A)
  Dr. Cyrus Jabbari, Joint Base Myer-Henderson Hall
- **REMChlor-MD Groundwater Transport and Remediation Model for Sites with Matrix Diffusion** (35 minutes + Q&A)
  Mr. Bruce Ensley, Dominion Energy
- **Final Q&A session**

In Case of Technical Difficulties

- Use a compatible browser (Firefox, IE or Edge)
- If material is not showing on your screen or if screen freezes
  - Key in Ctrl + F5 to do a hard refresh of your browser
- If connecting to computer audio
  - Click the arrow next to the "*Join Audio*" button
  - Select test "*Speaker and Microphone*"
  - Follow prompts
- If you continue to experience difficulties, call into the conference line
  - (669) 900-6833 or (929) 205-6099
  - Required webinar ID: 739-191-114

How to Ask Questions

- Find the Q&A button on your control bar and type in your question(s)
- Make sure to add your organization name at the end of your question so that we can identify you during the Q&A sessions

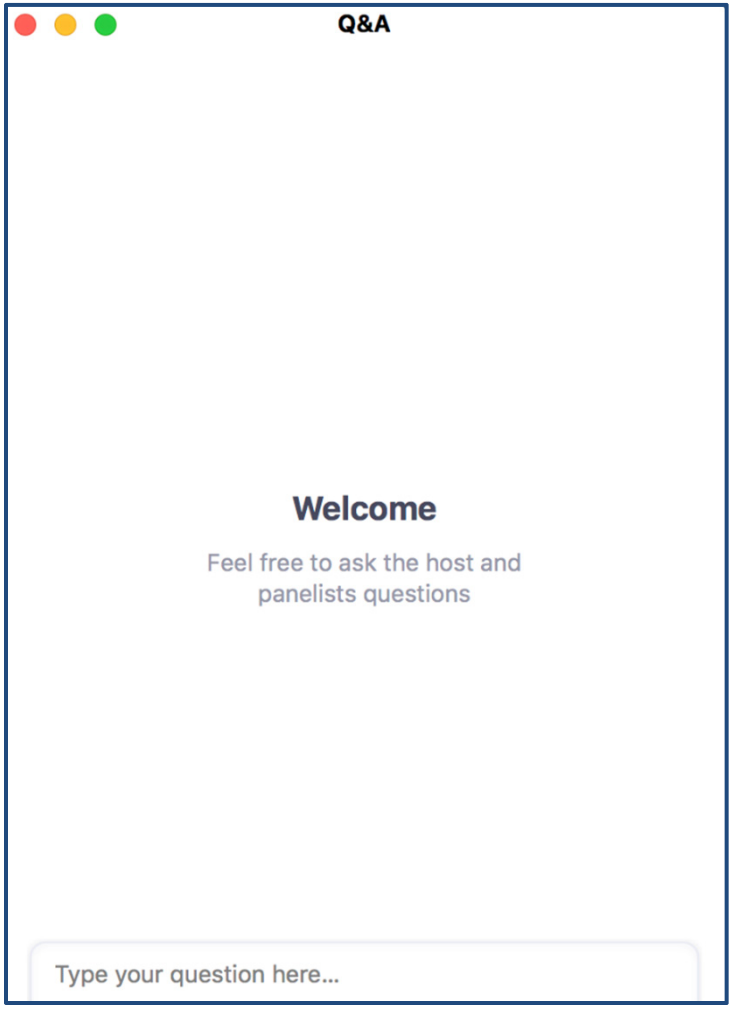

SERDP and ESTCP Overview

Timothy Tetreault
Installation Energy and Water
Program Manager

SERDP DOD • EPA • DOE | ESTCP

SERDP

- Strategic Environmental Research and Development Program
- Established by Congress in FY 1991
  - DoD, DOE and EPA partnership
- SERDP is a requirements driven program which identifies high-priority environmental science and technology investment opportunities that address DoD requirements
  - Advanced technology development to address near term needs
  - Fundamental research to impact real world environmental management

ESTCP

- Environmental Security Technology Certification Program
- Demonstrate innovative cost-effective environmental and energy technologies
  - Capitalize on past investments
  - Transition technology out of the lab
- Promote implementation
  - Facilitate regulatory acceptance

Program Areas

1. Environmental Restoration
2. Installation Energy and Water
3. Munitions Response
4. Resource Conservation and Resiliency
5. Weapons Systems and Platforms

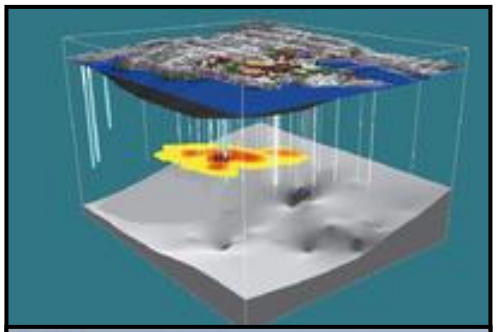

Installation Energy and Water

- Smart and secure installation energy management
  - Microgrids
  - Energy storage
  - Ancillary service markets
- Efficient integrated buildings and components
  - Design, retrofit, operate
  - Enterprise optimized investment
  - Advanced components
  - Intelligent building management
  - Non-invasive energy audits
- Distributed generation
  - Cost effective
  - On-site
  - Emphasis on renewables

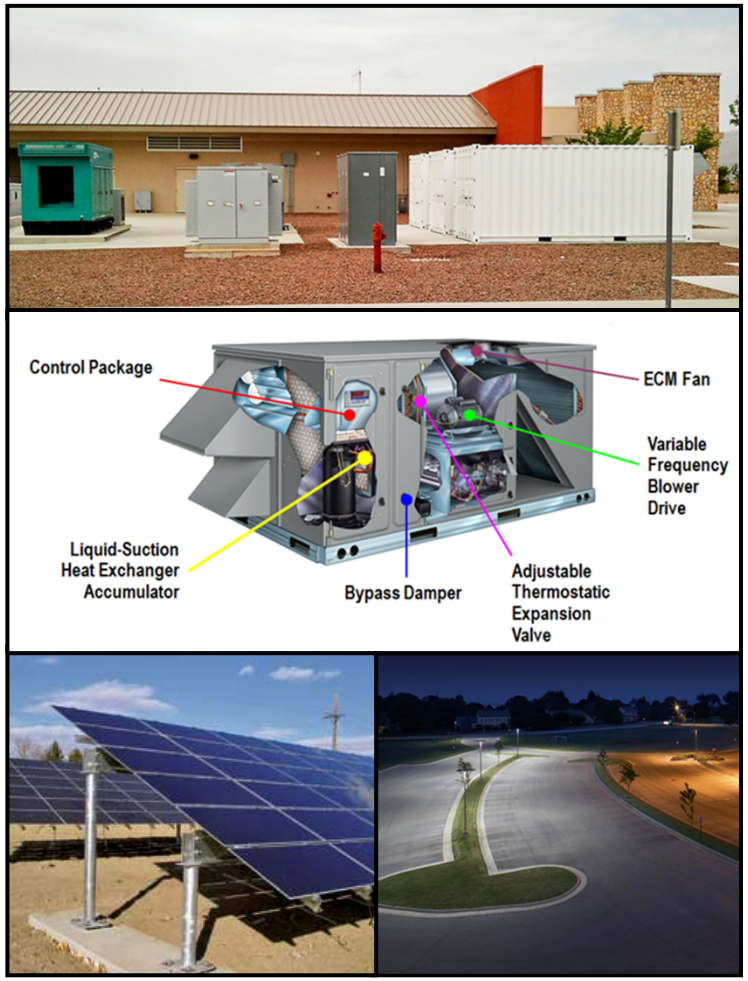

SERDP and ESTCP Webinar Series

Date	Topic
March 14, 2019	Determining the Temporal and Spatial Scales of Non-Stationarity in Temperature and Precipitation across the Continental U.S.
March 28, 2019	Weapons Systems and Platforms: Accelerated Aging Studies
April 11, 2019	Managing Contaminated Sediments
April 25, 2019	Unexploded Ordnance Characterization and Detection on the Beach Face and in Muddy Estuarine Environments
May 9, 2019	Soil Microbial Communities: Critical Roles in Control of Non-Native Invasive Species and Restoration of Ecosystem Functions

For upcoming webinars, please visit

http://serdp-estcp.org/Tools-and-Training/Webinar-Series

SERDP DOD • EPA • DOE | ESTCP

Save the Date!

SERDP • ESTCP
SYMPOSIUM

A three-day symposium showcasing the latest technologies that enhance DoD's mission through improved environmental and energy performance

December 3-5, 2019
Washington Marriott Wardman Park

Registration information available soon

Conservation Voltage Reduction (CVR) Project at Fort Myer, Joint Base Myer-Henderson Hall

Cyrus Jabbari, Ph.D.
Joint Base Myer-Henderson Hall

SERDP DOD • EPA • DOE | ESTCP

Agenda

- Project rationale
- Why Fort Myer?
- Project financing
- Verification of results
- Monthly voltage performance by circuit
- Measurement and verification completed
- Validation by Fort Myer

Project Rationale

- Reduce energy usage
- Reduce energy cost
- Increase energy efficiency
- Help the reduction of carbon footprint
- Attempt, in part, to comply with DoD energy policies
- Obtain data for promoting the concept of CVR at other installations

Why Fort Myer?

- Existence of numerous Smart Meters at buildings' utility transformers
- Existence of numerous USACE installed meters at buildings' main distribution panels for remote energy monitoring
- Proximity to DoD, Pentagon, ACSIM for high level visibility of the project performance
- On-going interest in implementation of the concept of "Base of Tomorrow" at Fort Myer

Project Financing

- The CVR project was proposed by Dominion Energy to the SERDP/ESTCP board for approval and financing as a research project. The project site was proposed and approved to be Fort Myer, Joint Base Myer-Henderson Hall
- Upon review and approval of the project by SERDP/ESTCP, the United States Army Corps of Engineers, USACE, was given the contracting authority on the project
- Dominion Energy designed, procured, and with the approval of JBM-HH, implemented the project in conjunction with the existing Utility Privatization contract
- No funding was used on this project from the government SRM budget at JBM-HH

Verification of Results

- Fort Myer, Henderson Hall and portions of Arlington National Cemetery are served from the Dominion owned Radnor Heights substation located at the Fort Myer grounds. Fort Myer, Henderson hall and portions of Arlington National Cemetery are served by four Under Ground circuits from the substation
- There are four sets of automatic voltage regulators installed on line with the four circuits feeding the installation
- The project was completed in early 2017 and for the next 12 months Dominion Energy engaged in collection of data for verifying system's performance
- The following two slides show the CVR's performance from obtained data on the four circuits feeding Fort Myer, Henderson Hall and ANC

Monthly Voltage Performance by Circuit

568 Circuit with CVR_f Range 0.9 to 1.03

Month	AMI Low Voltage Average	Control Bus Voltage	Nominal Bus Voltage	% Voltage Reduction from Historical Baseline
July	117.6	120.8	123.9	2.51%
August	116.4	118.3	123.9	4.57%
September	116.7	118.2	123.9	4.64%
October	117.0	118.3	123.9	4.59%
November	117.1	118.1	123.9	4.71%
December	117.2	118.1	123.9	4.70%
January	117.9	118.7	123.9	4.26%
February	117.1	118.2	123.9	4.60%
March	117.1	118.1	123.9	4.73%
April	116.9	118.0	123.9	4.76%
May	117.0	118.3	123.9	4.58%
June	116.5	118.2	123.9	4.62%

Mean Voltage Reduction: 4.4% = **4.0-4.6%** Annual Energy Savings Potential

569 Circuit with CVR_f Range 0.6 to 1.0

Month	AMI Low Voltage Average	Control Bus Voltage	Nominal Bus Voltage	% Voltage Reduction from Historical Baseline
July	116.7	119.8	124.0	3.37%
August	116.4	118.1	124.0	4.77%
September	116.6	118.1	124.0	4.80%
October	117.2	118.1	124.0	4.74%
November	117.3	118.1	124.0	4.77%
December	117.5	118.1	124.0	4.77%
January	118.2	118.9	124.0	4.09%
February	117.5	118.3	124.0	4.60%
March	117.3	118.0	124.0	4.82%
April	116.9	118.0	124.0	4.80%
May	117.0	118.3	124.0	4.56%
June	116.6	118.2	124.0	4.64%

Mean Voltage Reduction: 4.6% = **2.8-4.3%** Annual Energy Savings Potential

570 Circuit with CVR_f Range 1.0 to 1.1

Month	AMI Low Voltage Average	Control Bus Voltage	Nominal Bus Voltage	% Voltage Reduction from Historical Baseline
July	117.8	121.2	124.1	2.38%
August	116.6	118.7	124.1	4.36%
September	116.7	118.7	124.1	4.39%
October	116.5	118.4	124.1	4.61%
November	116.7	118.2	124.1	4.77%
December	116.8	117.9	124.1	5.00%
January	116.6	117.9	124.1	5.03%
February	117.1	118.4	124.1	4.64%
March	117.1	118.0	124.1	4.93%
April	116.5	117.8	124.1	5.09%
May	117.1	118.3	124.1	4.70%
June	116.3	118.3	124.1	4.71%

Mean Voltage Reduction: 4.6% = **4.6-5.0%** Annual Energy Savings Potential

571 Circuit with CVR_f Range 1.1 to 1.2

Month	AMI Low Voltage Average	Control Bus Voltage	Nominal Bus Voltage	% Voltage Reduction from Historical Baseline
July	117.1	120.3	124.0	2.97%
August	116.6	118.1	124.0	4.75%
September	116.7	118.0	124.0	4.83%
October	116.9	118.1	124.0	4.74%
November	117.6	118.2	124.0	4.69%
December	117.3	118.5	124.0	4.41%
January	117.3	117.8	124.0	5.00%
February	117.6	118.3	124.0	4.56%
March	117.3	118.0	124.0	4.82%
April	117.2	118.0	124.0	4.82%
May	117.5	118.2	124.0	4.64%
June	117.0	118.2	124.0	4.67%

Mean Voltage Reduction: 4.6% = **5.2-5.7%** Annual Energy Savings Potential

Measurement and Verification Completed

- For the Winter IPR, DVP provided the ESTCP Program Office with original CVRf range estimates between 0.6 to 1.0. DVP's statistical M&V report results fall closely within this range
- A summer CVR factor for each circuit has been calculated and confirmed Dominion's experience that summer CVR factors are often higher than winter CVR factors

Measurement and Verification Completed (Cont'd)

- The 12-month projected energy savings by circuit is provided in the table below:

Project Performance Period	**568 Circuit**	**569 Circuit**	**570 Circuit**	**571 Circuit**	**Summary**
Summer CVR_f	**1.03**	**0.95**	**1.11**	**1.13**	
Winter CVR_f	**0.90**	**0.61**	**1.01**	**1.24**	
Billed Energy (kWh)	12,852,829	6,391,448	11,976,487	7,113,169	38,333,932
Energy Saved (kWh)	497,058	216,930	466,708	298,102	1,478,798
Estimated Energy Saved (%)	3.7%	3.3%	3.8%	4.0%	**3.7%**
Avoided CO_2 (Metric tons)	219.8	95.9	206.4	131.8	653.9
Bill Relief Rate ($/kWh)	**$30,930**	**$13,445**	**$28,908**	**$18,487**	**$91,770**

Project Validation by the Fort Myer Team

- Fort Myer team headed by the Utility Privatization COR was involved with the project the entire time from the initial proposal, project award, project implementation and during the data collection process
- The independent COR's analysis of utility bills for the calendar year 2018 for power delivered from Radnor Heights substation to the users at Fort Myer which totaled 42,000 MWh and costing $2.8M saved the garrison nearly $100K

Project Validation by the Fort Myer Team (Cont'd)

- The validation required access to the buildings' voltage levels to see how the voltage levels' behavior. This requires installation of government owned smart meters at the buildings' power distribution centers' such as those installed at JBM-HH by USACE, Huntsville, AL
- Without access to smart meters providing data on the system voltages, the independent validation of savings cannot be confirmed

For additional information, please visit

https://serdp-estcp.org/Program-Areas/Installation-Energy-and-Water/Energy/Microgrids-and-Storage/EW-201519

Speaker Contact Information

cyrus.a.jabbari.civ@mail.mil; 703-696-8692

SERDP DOD • EPA • DOE | ESTCP

Q&A Session 1

SERDP
DOD • EPA • DOE

ESTCP

Utilization of Advanced Conservation Voltage Reduction for Energy Reduction on DoD Installations

Bruce Ensley
Dominion Energy

SERDP DOD • EPA • DOE | ESTCP

Agenda

- Project overview
- Introducing conservation voltage reduction
- Technical approach
- Advantages of Advanced Metering Infrastructure (AMI) based voltage control
- Voltage control use cases
- Fort Myer performance metrics and results
- Conclusions
- DoD benefits
- Acknowledgments

Project Overview

- Technology
  - AMI based voltage optimization technology and high speed low voltage regulation control
    - Conservation voltage reduction (CVR) and MicroCVR
- Demonstration objectives
  - 3-6% annual energy savings
  - Technologies requiring no change in human behavior
  - System compatible with high variation loads

Project Overview (Cont'd)

- Technical and economic results
  - Target reduction in voltage and usage
    - CVR = 2-4% and MicroCVR = 1-2%
  - Achieved
    - CVR = 3.7% over 12 month period and MicroCVR = 2-4% over project performance period
- Performer: Dominion Energy Virginia
- Demonstration Site: Fort Myer, Virginia

Introducing CVR

There is a relationship between energy and voltage - energy consumption follows voltage

$$\%\Delta \text{ Energy} = \text{CVR Factor} \times \%\Delta \text{ Voltage}$$

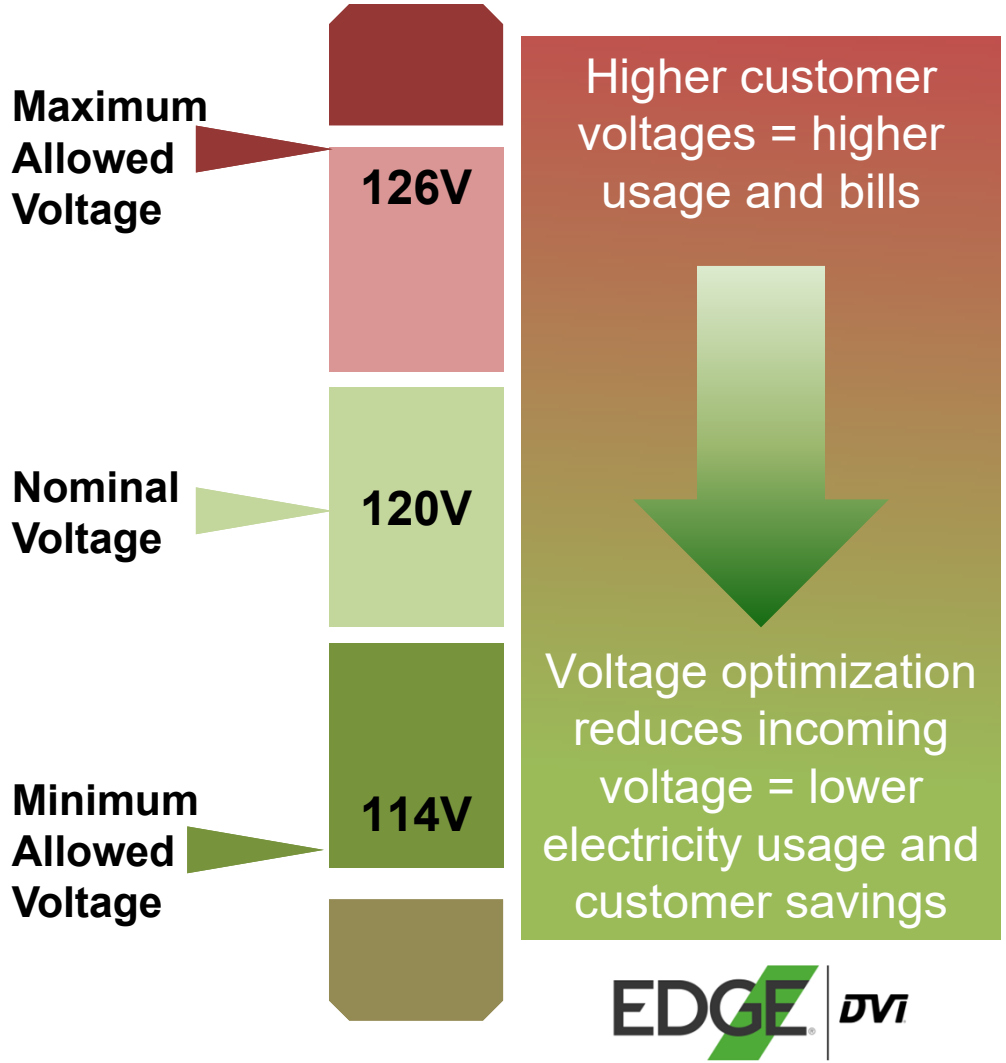

Technical Approach

- Site
  - Joint Base Fort Myer-Henderson Hall, Arlington, VA
  - Period covering July 2016 - June 2017 on 4 circuits serving ~38K MWH annual load
- Method
  - Gather energy usage data before installing CVR
  - Compare to usage after CVR and MicroCVR install for 1 year
  - MicroCVR voltage variation testing

Note: ANSI = American National Standards Institute

Technical Approach (Cont'd)

- Evaluation
  - Year-round energy efficiency (EE) method
    - Operate distribution system year-round with voltage as near as possible to the lowest allowable voltage (ANSI level '- 5%')

Note: ANSI = American National Standards Institute

Technical Approach

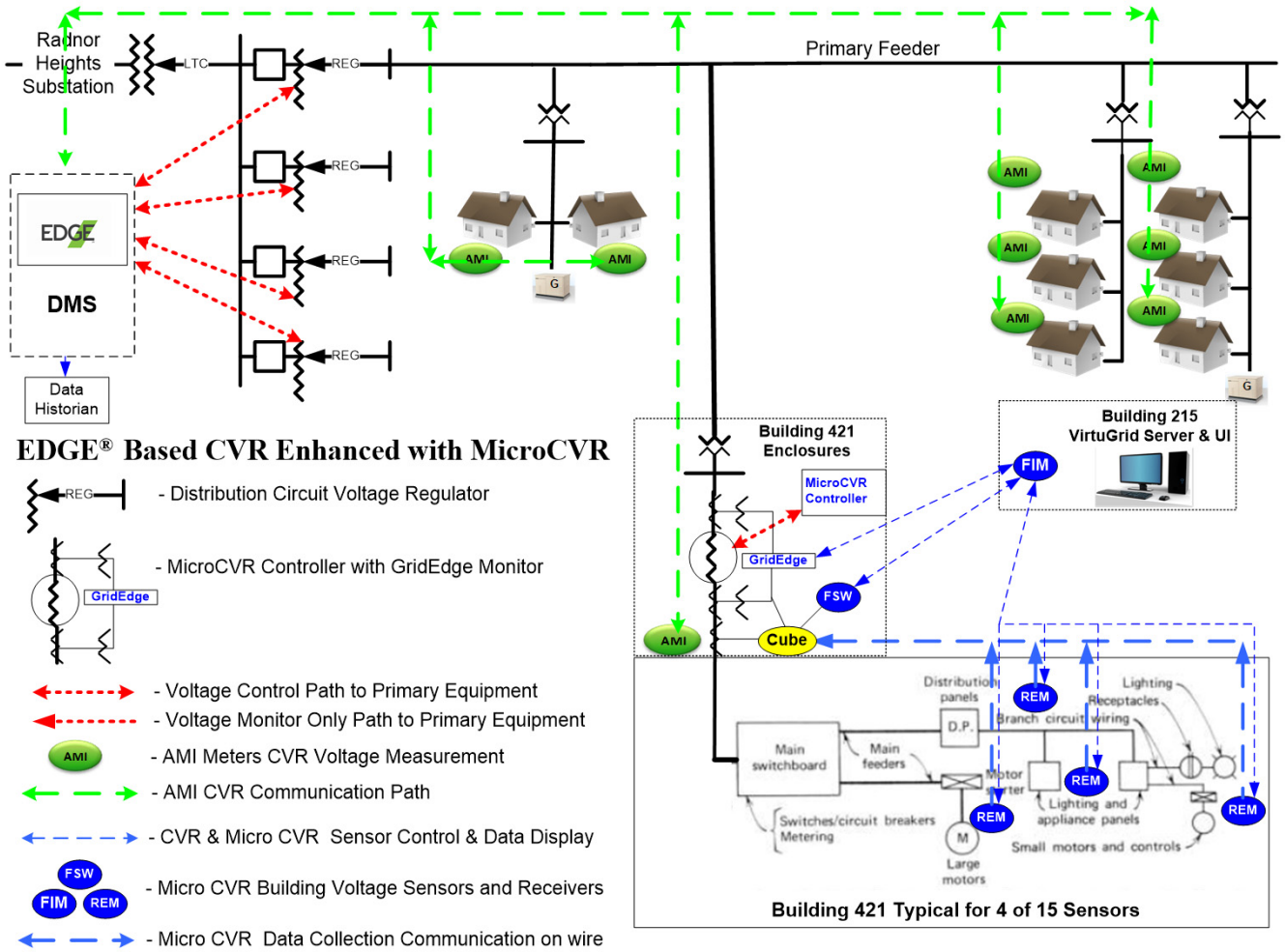

MicroCVR Technical Approach

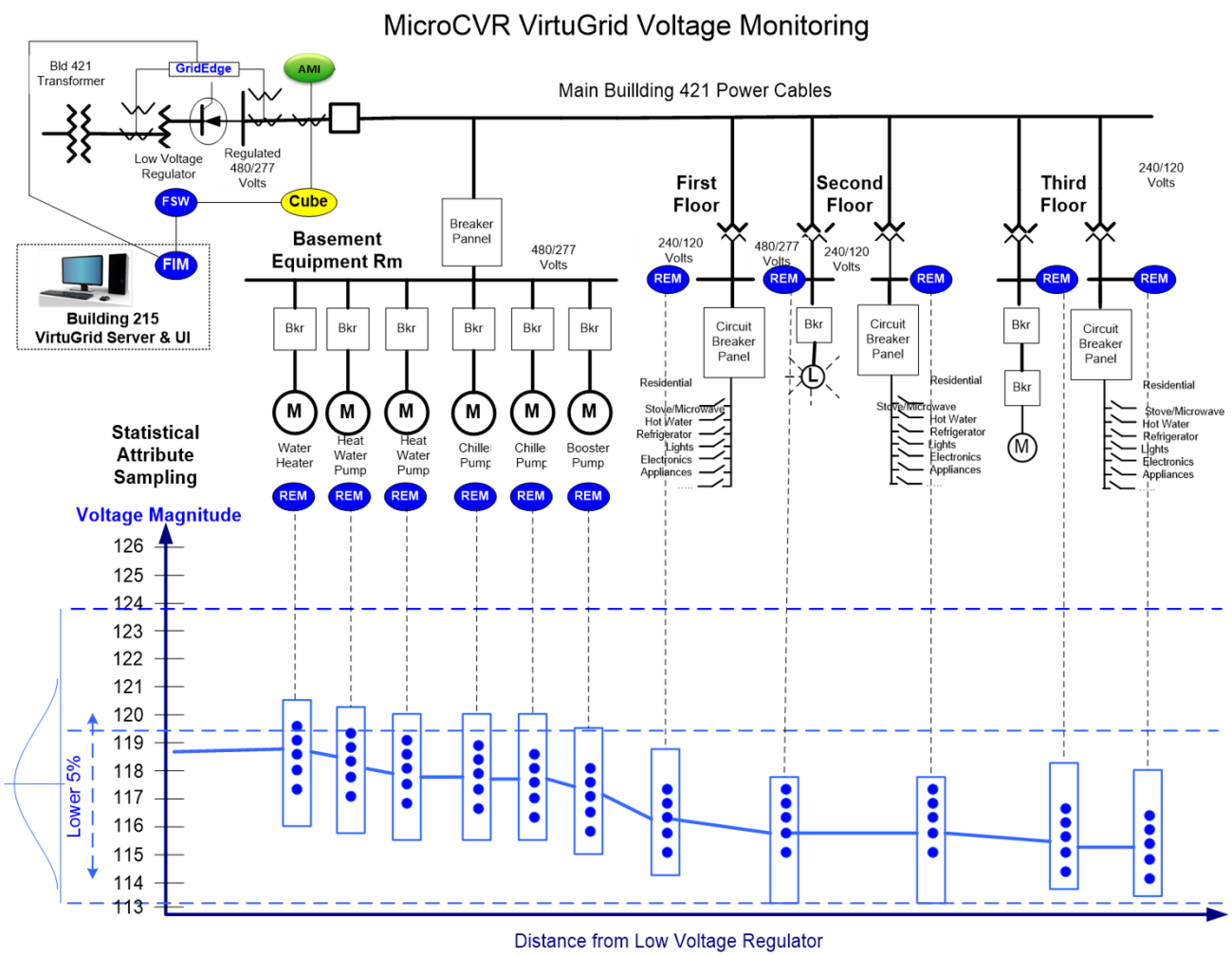

AMI Based Voltage Control

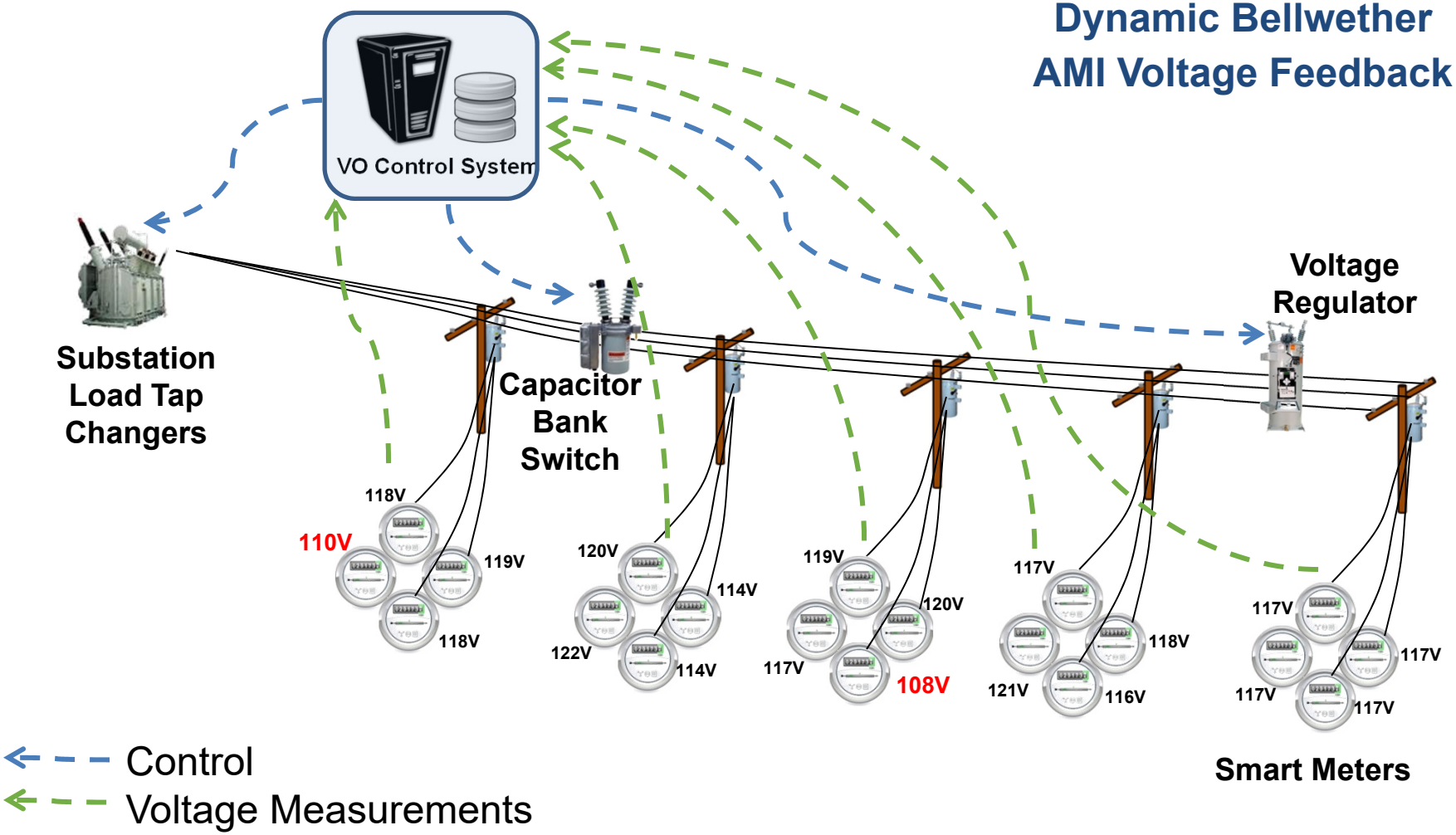

Voltage Reduction Use Cases

Use Case	Value
Conservation voltage reduction 24x7 (Volt/VAR Optimization)	Reduce installation's energy by 2%-4%
Demand Voltage Reduction (DVR) - beat monthly peak each month	Each MW of peak use reduced may be worth between $10K - $20K monthly depending on market specifics
Demand Voltage Reduction (DVR) - beat G&T/ISO/RTO Coincident peak	Each MW of peak use reduced worth $10K - $20K each month depending on market specifics
Demand Voltage Reduction (DVR) - Ratcheted rates	Annual peak sets demand rate for year Average of summer peaks set transmission charges for year (Texas only)
Voltage Stabilization	Enhanced reliability and increased solar photovoltaic hosting capacity

G&T = Generation and Transmission Cooperative/ISO = Independent System Operator/RTO = Regional Transmission Operator, MW = Megawatt

Quantitative Performance Objectives

Performance Objective	Metric	Data Requirements	Success Criteria	Result	Final Performance Update
Site-wide CVR	Energy - kWh	Meter readings of energy used by DEV at Fort Myer master meter delivery point	3% reduction compared to baseline	3.7% reduction	Energy savings Measurement & Verification (M&V) in process. Voltage reduction ranges from 2.4% – 5.0% below historical average over winter period and 4.5% to 5.5% during the summer period.
Building-level micro CVR	Energy - kWh	Meter readings of energy used at premise meter delivery point	1.5% reduction compared to baseline	5% reduction	Interim energy savings provided on Slide 22. Voltage reduction ranges from 1.2% – 3.0% below average historical CVR controlled input voltage.

Quantitative Performance Objectives

Performance Objective	Metric	Data Requirements	Success Criteria	Result	Final Performance Update
Compatibility of MicroCVR with highly variable loads or renewable generation	Voltage stability (V)	VirtuGrid Voltage Measurements using GridEdge and VirtuGrid voltage sensors	25% reduction in variation of voltages relative to the non MicroCVR case	50% reduction	Test for high variability 2017 completed in Q2. Results are placed in final report.
Highly secure voltage supply	Voltage stability (V)	VirtuGrid voltage measurements using GridEdge and VirtuGrid voltage sensors	Maintain secure voltages to within 1% of the expected voltage setpoint	1.0% of setpoint	Voltage tolerance to set point has been maintained through project performance period.

Qualitative Performance Objectives

Performance Objective	Metric	Data Requirements	Success Criteria	Results	Final Performance Update
No Operational impact to primary tasks	# customer complaints	On-site Base Manager receives notification	Zero customer complaints	1 issue reported	• 1 customer issue was reported on July 17 • Investigation into customer equipment made by DPW engineering team
No Impact to Base Security	# incidents	On-site Base Manager receives notification	Zero incidents	Zero issues reported	• Zero incidents have been reported over project performance period

Conclusions – CVR Technology

- The pilot exceeded expectations for CVR
  - Project run time savings = 3.7%
  - With 100% system availability, savings potential is 4.3% with zero impact to customers
- CVR is a compelling energy efficiency solution
  - Leverages the Army's investment in AMI technology

Conclusions – MicroCVR Technology

- The pilot exceeded the expectations for microCVR
  - Overall additional premise-level energy savings of 4.1%
  - MicroCVR promising for high energy consuming buildings
- Bottom Line
  - Save energy, save money, reduce CO_2 without interfering with the mission

Department of Defense Benefits

- CVR technology provides the following:
  - Non-intrusive and sustainable energy savings
  - Continuous “health-assessment” of installation’s distribution system
  - Visibility of impacts of distributed resources on distribution system and ability to actively mitigate those impacts

Acknowledgments

- **Principal Investigator**: Brandon Stites
- **Co-Principal Investigator**: Tarek Abdallah (CERL)
- **Lead Technical Advisor**: Phil Powell (Retired)
- **DoD Liaison**: Cyrus Jabbari (Fort Myer)
- **Manager Base Privatization**: Vick Atwal (Fort Myer) and Marty Travis (Retired)
- **CERL Sponsor**: Harold Sanborn
- **Project Lead**: Bruce Ensley

For additional information, please visit

https://serdp-estcp.org/Program-Areas/Installation-Energy-and-Water/Energy/Microgrids-and-Storage/EW-201519

Speaker Contact Information

bensley@dvigridsolutions.com; bruce.ensley@dom.com
804-771-4005

SERDP DOD • EPA • DOE | ESTCP

Q&A Session 2

SERDP DOD • EPA • DOE | ESTCP

The next webinar is on March 14, 2019

Determining the Temporal and Spatial Scales of Non-Stationarity in Temperature and Precipitation across the Continental U.S.

SERDP DOD • EPA • DOE | ESTCP

Survey Reminder

Please take a moment to complete the survey that will pop up on your screen when the webinar ends

SERDP DOD • EPA • DOE | ESTCP