ESTCP
Cost and Performance Report

(PP-9705)

Spent Acid Recovery Using Diffusion Dialysis

September 1999

ENVIRONMENTAL SECURITY
TECHNOLOGY CERTIFICATION PROGRAM

U.S. Department of Defense

TABLE OF CONTENTS

Page

1.0 EXECUTIVE SUMMARY 1

2.0 TECHNOLOGY DESCRIPTION 3
- 2.1 DEVELOPMENT HISTORY 3
- 2.2 PROCESS DESCRIPTION 3
- 2.3 TECHNICAL ADVANTAGES 6
- 2.4 TECHNICAL LIMITATIONS 7

3.0 DEMONSTRATION DESIGN 9
- 3.1 PERFORMANCE OBJECTIVES 9
- 3.2 PHYSICAL SETUP AND OPERATION 9
- 3.3 MEASUREMENT OF PERFORMANCE 10

4.0 PERFORMANCE ASSESSMENT 11
- 4.1 ACID RECOVERY FROM SPENT COPPER AND MAGNESIUM BRIGHT DIP 11
- 4.2 PERFORMANCE OF RECOVERED ACID FROM SPENT COPPER BRIGHT DIP IN COPPER BRIGHT DIP OPERATIONS 13
- 4.3 PERFORMANCE OF RECOVERED ACID FROM SPENT MAGNESIUM BRIGHT DIP IN MAGNESIUM BRIGHT DIP OPERATIONS 13
- 4.4 CONTAMINATED HYDROCHLORIC ACID PROCESSING WITH DIFFUSION DIALYSIS 13
- 4.5 IMPACT OF DIFFUSION DIALYSIS PROCESSING OF CONTAMINATED HYDROCHLORIC ACID ON CHROME STRIPPING ACTIVITY 14

5.0 COST ASSESSMENT 15
- 5.1 CASE 1: TOBYHANNA ARMY DEPOT COPPER AND MAGNESIUM BRIGHT DIP PROCESSING 15
- 5.2 CASE 2: CHROMIUM STRIPPING BATH IMPLEMENTATION AT ROCK ISLAND ARSENAL 17

6.0 IMPLEMENTATION ISSUES 23
- 6.1 COST OBSERVATIONS 23
- 6.2 PERFORMANCE OBSERVATIONS 23
- 6.3 END USER/OEM ISSUES 24

7.0 REFERENCES 25

APPENDIX A: Points of Contact

This page was intentionally left blank.

LIST OF FIGURES

Page

Figure 1. Simplified Schematic of Diffusion Dialysis Process for Acid Recovery 4

Figure 2. Simplified Schematic of a Diffusion Dialysis Membrane Stack 4

Figure 3. Commercial Diffusion Dialysis Unit 5

Figure 4. Schematic of Diffusion Dialysis Unit and Operating Schemes 6

LIST OF TABLES

Page

Table 1. Performance of Diffusion Dialysis System with Spent Copper Bright Dip at Tobyhanna Army Depot 12

Table 2. Performance of Diffusion Dialysis System with Spent Magnesium Bright Dip at Tobyhanna Army Depot 12

Table 3. Performance of Diffusion Dialysis System on Chromium Stripping Acid at Rock Island Arsenal 14

Table 4. Impact of Diffusion Dialysis Implementation on Bright Dip Operations at Tobyhanna Army Depot 16

Table 5. Impact of Diffusion Dialysis Implementation on the Cost of Tobyhanna Army Depot Copper and Magnesium Bright Dip Operations 17

Table 6. Projected Impact of Diffusion Dialysis Performance and Process Objectives on Diffusion Dialysis Processing Requirements and Acid Consumption in a Chrome Stripping Bath at Rock Island Arsenal 19

Table 7. Impact of Diffusion Dialysis Implementation on the Cost of Chrome Stripping Operations at the Rock Island Arsenal 19

Table 8. Preliminary Cost Assessment for Hydrochloric Acid Recovery 21

LIST OF ACRONYMS

CBD	Copper Bright Dip
CTC	Concurrent Technologies Corporation
DD	Diffusion Dialysis
ECAM	Environmental Cost Analysis Methodology
IWTP	Industrial Wastewater Treatment Plant
MBD	Magnesium Bright Dip
NFESC	Naval Facilities Engineering Service Center
OMB	Office of Management and Budget

ACKNOWLEDGMENTS

We would like to acknowledge the following people who supported and assisted in this project: Naval Facilities Engineering Service Center – Nick Stencel; Rock Island Arsenal – Tera Hill, Kentley Lowenstein, Kimberly Mertz, Dave Webb, and Dick Wingert; Tobyhanna Army Depot - Bob Gilbride, John J. Ross, Jr., Joe Olsomner, Patrick Tierney, Chas Valenza; Zero Discharge Technology - Tony D'Amato; BENMOL Corporation - Gerald Anderson and Frank Mitchell.

Technical material contained in this report has been approved for public release.

This page was intentionally left blank.

1.0 EXECUTIVE SUMMARY

Each year, several million gallons of acid solutions are used by the Department of Defense (DoD) and its support contractors in various metal finishing operations such as stripping, etching, activation, passivation and pickling. Over time, these acids become contaminated with metals and are discarded at considerable expense as hazardous waste. Often the acid content of the discarded acid is comparable to the beginning solution.

Diffusion dialysis is a recently commercialized membrane separation technology that can be used for the recovery of a wide variety of acids from high strength, metal contaminated solutions such as produced in metal finishing operations. It is extremely easy to install and operate, requiring only a source of deionized water and electricity, and it produces an acid stream that has an acid strength comparable to that of the contaminated acid, making the acid potentially suitable for replacing and maintaining metal-finishing bath contents without further processing.

In this Environmental Security Technology Certification Program (ESTCP) project, commercially available diffusion dialysis systems were deployed and operated at two DoD metal finishing facilities to verify performance and reuse potential of the recovered acid. The first unit was deployed in stand-alone, batch-processing mode at Tobyhanna Army Depot, Tobyhanna, PA to recover nitric and sulfuric acids from spent copper bright dip (CBD), and nitric acid and ammonium bifluoride from spent magnesium bright dip (MBD). Spent acid accumulation from the CBD and MBD processes at Tobyhanna is approximately 800 gallons per year. The second unit was deployed at the Rock Island Arsenal, Rock Island, IL in dedicated, continuous-processing mode to purify and return hydrochloric acid to a 4000-gallon chrome-stripping bath.

The studies demonstrated that diffusion dialysis is a highly reliable and a viable acid recovery technology for the recovery of nitric, sulfuric, hydrofluoric, and hydrochloric acids. The units operated without incident and recovered between 70 and 90% of the acid from each of the contaminated solutions. The recovered acid stream had an acid strength that was between 75 and 95% of the contaminated acid solution from which it was derived. Aluminum, chromium, iron and nickel contaminant concentrations were reduced by approximately 80% from each solution, but the reductions observed for copper, molybdenum, tin, cadmium, and zinc were lower. During continuous processing of the chrome-stripping solution, reductions for cadmium and zinc were below 20%. This was attributable to the formation of chloride complexes by these metals in high strength hydrochloric acid solutions, and indicates that, if one or more of these metals were predominant contaminants, diffusion dialysis probably would not be a technically viable means of recovering spent hydrochloric acid.

However, for the streams investigated, recovered acid was suitable for reuse without further processing. At Tobyhanna, the recovered CBD was shown to possess about 60%, and for MBD was estimated to possess 45%, of the service life of the fresh bright dip. At the Rock Island Arsenal, the operators of the chrome-stripping bath expressed complete satisfaction with the continuously treated acid bath.

Cost projections were made on the spent acid streams processed by diffusion dialysis during the demonstrations. These showed a payback of 3-4 years for batch-mode processing of spent CBD/MBD on a $22,000 capital investment. For continuous processing of spent chrome stripping acid, payback was

calculated at 8-9 years for a $32,000 capital investment. These estimates contrast with a preliminary, theoretical cost analysis performed prior to commencement of the demonstrations. This preliminary analysis had predicted a much more favorable payback for continuous processing of spent hydrochloric acid solution, primarily due to unrealistically high labor cost savings in hazardous waste handling.

Larger scale operations were also considered in the cost analysis. Doubling the workload of CBD/MBD treatment to approximately 1,500 gallons per year reduced payback to less than 2 years for treatment of spent acids from the CBD/MBD processes. Thus this scale of operation would appear to be the minimum necessary before diffusion dialysis may be considered cost-effective for recovery of the nitric acid, sulfuric acid and ammonium bifluoride contained in CBD and MBD spent acids. Although workloads in DoD shops fluctuate, this scale of operation would be realistic if a batch-mode diffusion dialysis unit were installed to treat several such high-value spent acid streams from different metal finishing processes. For even larger operations, continuous-mode operation may be feasible, which would further improve the economics. In most situations, a favorable payback would depend upon the facility having an on-site Industrial Wastewater Treatment Plant (IWTP) that can handle the metal-laden waste stream from the diffusion dialysis process

Recovery of hydrochloric acid, however, is unlikely to be cost-effective at any realistic scale of operation due its low value. Diffusion dialysis is likely to be cost effective for other metal-finishing acids only in applications where the current acquisition and disposal costs for these acids exceed about $20,000 per year. On smaller applications, diffusion dialysis could provide a significant reduction in hazardous material usage but the payback period would generally be much more than 2 or 3 years.

2.0 TECHNOLOGY DESCRIPTION

2.1 DEVELOPMENT HISTORY

Each year, several million gallons of acid solutions are used by DoD and its support contractors in metal finishing operations such as anodizing, etching, chemical milling, pickling, activation, passivation, stripping, and bright dipping. Commonly used acids include HCl, HNO_3, H_2SO_4, HF, ammonium bifluoride ($NH_3 \cdot 2HF$), phosphoric acid (H_3PO_4), and methane sulfonic acid (CH_4O_3S). In most of these operations, only a small fraction of the acid is actually consumed before the acid is removed from service due to high dissolved metals content. Furthermore, at many of these facilities, these contaminated acids are simply containerized and disposed as hazardous waste, often at considerable expense.

Diffusion dialysis was developed as a convenient means to recover a wide variety of acids, bases, or other valuable materials from various contaminated solutions. Since its inception about 100 units have been deployed worldwide in a number of applications[1] including the recovery of hydrochloric acid (HCl)[2,3,5], nitric acid (HNO_3)[4,5,6,7], hydrofluoric acid[5] and sulfuric acid (H_2SO_4)[2,5] from spent pickling solutions, metal finishing baths, battery waste, and uranium processing; the recovery of caustic and aluminum from aluminum chemical milling, anodizing, and aluminum surface finishing solutions; and the recovery of caustic from photographic baths and electronic component processing.

2.2 PROCESS DESCRIPTION

Diffusion dialysis makes use of the selective transport properties of ion exchange membranes. These membranes, which come in anionic and cationic forms, have the ability to selectively transport either negatively or positively charged ionic species, but not both from one aqueous stream to another based on concentration gradient. By passing a contaminated acid stream on one side of an anion exchange membrane and deionized water on the other, the acid anions are transported from the contaminated acid into the deionized water while positively charged metal species remain behind as shown in Figure 1.

In commercial diffusion dialysis units, the flow path is deliberately made long with countercurrent flow of the two fluids, as shown in Figure 2. This enables the technology to recover a large percentage of the acid in the contaminated stream and produce a recovered acid stream that has an acid strength that compares to that of the contaminated acid from which it was derived. Units are typically operated to produce a recovered acid stream with an acid strength that approaches that of the contaminated stream while maximizing acid recovery. Under this operating scenario, about 70 to 90% of the acid in the contaminated stream is normally recovered. Alternatively, the unit can be operated to recover close to 100% of the acid by increasing deionized water throughput. Under this scenario, however, the resultant strength of the recovered acid is generally much less than the contaminated stream from which it was derived, and thus less suitable for re-use.

A fraction of the metal contaminants also pass into the recovered acid stream. The amount depends on the acid type and the metal. Typically the amount is less than 20% of the feed.

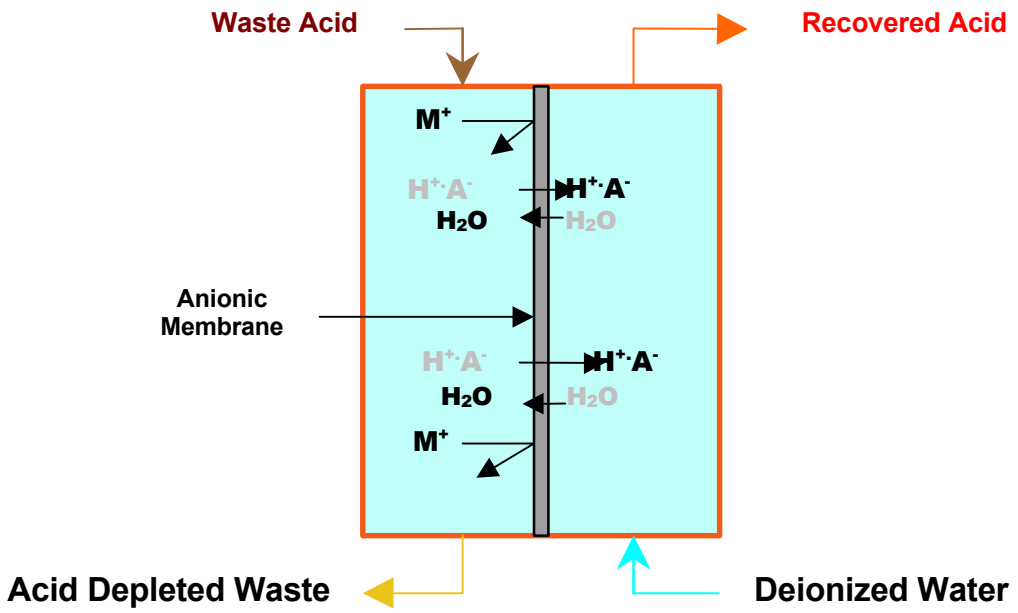

Figure 1. Simplified Schematic of Diffusion Dialysis Process for Acid Recovery

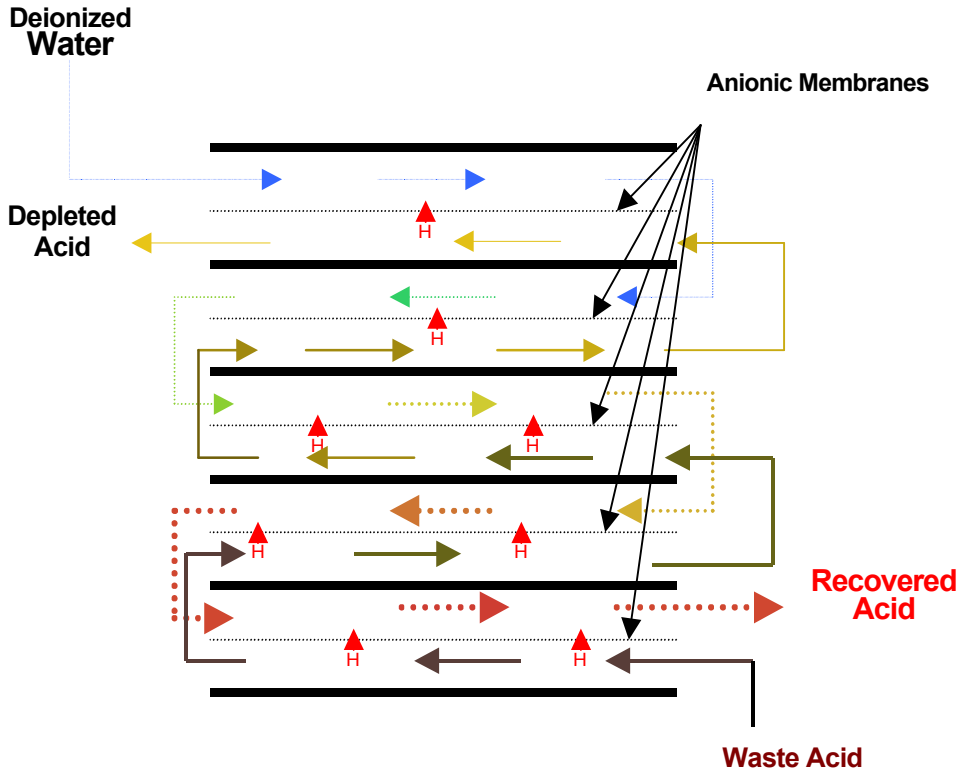

Figure 2. Simplified Schematic of a Diffusion Dialysis Membrane Stack

Commercial diffusion dialysis systems are often available as skid-mounted units as shown in Figure 3. The smallest engineered units can process as little as 5 gallons per day while the largest can process up to 500

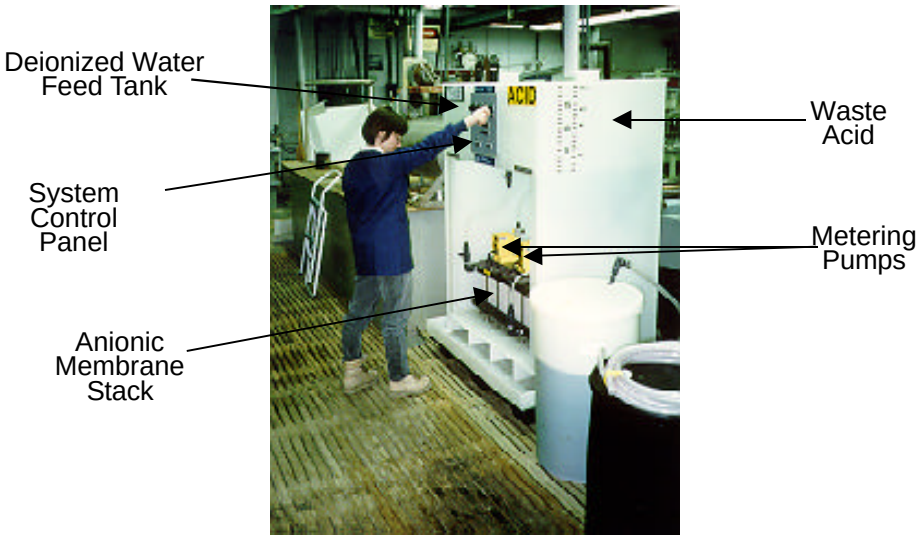

System shown has rated capacity of 20 gallons/day

Figure 3. Commercial Diffusion Dialysis Unit

gallons per day. The units are extremely compact and generally can be positioned in a work area without any modifications to the space. A 20-gallon per day unit occupies less than 25 square feet and is about 5 feet high.

Each unit can be obtained complete with on-board feed tanks for the contaminated solution and deionized water, metering pumps for the two streams, membrane stack, a feed pump for transferring contaminated solution into the on-board feed tank, a fluid filter for removing particulate from the contaminated solution, level controllers to control the addition of acid and water into the on-board feed tanks and an electrical control panel. All that is needed to install and operate a unit is a source of electrical power, deionized water, and miscellaneous piping and valving to integrate the unit with existing operations. A typical schematic for a diffusion dialysis unit is provided in Figure 4.

Diffusion dialysis units can be operated in one of two modes: batch or continuous. In the batch mode, the contaminated acid is fed to the on-board feed tank and processed through the unit. The recovered acid is recovered in a tank or drum for later reuse. Batch operation has the advantage that a single unit can be used to process a variety of acids at the facility. However, batch operations are more labor intensive than continuous operations. Each acid is run separately and perhaps at many different times during the year, requiring the unit to be thoroughly flushed after each run. In addition, the optimum operating setpoints for each acid will be different. This will require the operator to adjust these settings at the beginning of each run and make sure that the unit is providing the desired results.

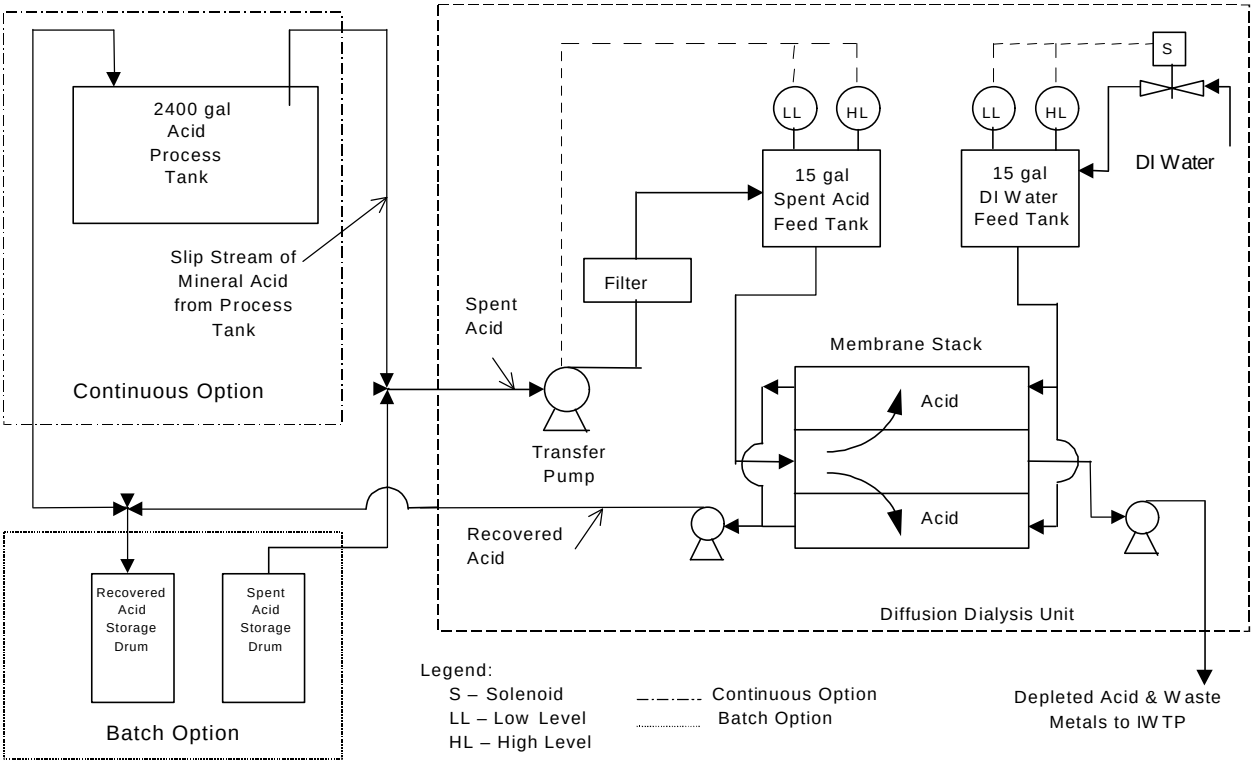

Figure 4. Schematic of Diffusion Dialysis Unit and Operating Schemes

In the continuous mode of operation, acid is withdrawn directly from an acid bath and the recovered acid stream is directly returned to the bath. The stream containing the contaminants and unrecovered acid is either recovered for disposal or sent directly to an on-site IWTP for treatment. The latter makes the operation totally continuous. An advantage of operating in the continuous mode is that labor requirements are minimal. Once the operation has been established, the unit runs with only occasional oversight. Another advantage is that continuous processing of the bath acid results in a bath with essentially constant activity. The primary disadvantage of the continuous mode of operation is that the required processing rate is generally about 3 times the normal acid disposal rate for the bath and the waste generation is equally larger. Additionally, continuous operations are generally only applicable to acid baths with inventories of several thousand gallons. At smaller volumes, even the smallest diffusion dialysis unit is too large.

Sizing a diffusion dialysis unit for a specific application is not always straightforward since the recovered acid is not pure and therefore it has a different life in the process from which it was derived. However, as a rule of thumb, a stand-alone batch operation will require a unit that can process about twice the spent acid production rate(s) to which it will be applied. In the case of continuous operations, the processing capacity for the unit should be at least three times the normal spent acid production rate.

2.3 TECHNICAL ADVANTAGES

The principal technical advantage of diffusion dialysis technology to other acid recovery options is the ease of use. Operating the unit consists simply of filling feed tanks with contaminated acid and deionized water

(either manually or automatically), turning on metering pumps, adjusting their flow to provide the best overall acid recovery performance, collecting the product streams from the unit, and recycling or disposing of them as desired.

Another advantage of the technology is that it does not present any additional safety hazards to the workers in the metal finishing shop. The workers are handling the same hazardous materials that they handle during normal operations, the unit operates at atmospheric pressure and ambient temperature and the electrical hazards are less than most electroplating operations.

2.4 TECHNICAL LIMITATIONS

The major technical limitation of the technology is that the acid that it produces is not extremely pure. The membranes also permit some of the metals in the acid solution into the recovered acid stream. The fraction may vary from less than 5% to greater than 50% depending upon the metal and the type of acid it is in. This results in a product whose value or reuse potential can be difficult to assess.

This page was intentionally left blank.

3.0 DEMONSTRATION DESIGN

3.1 PERFORMANCE OBJECTIVES

The objective of this project was to determine the acid recovery performance of the technology with various spent acid streams, the utility of the recovered acid in the metal finishing operation from which it was derived and the cost effectiveness of the technology.

For the technology to be a technically viable option for recovering acid from spent metal finishing baths:

- The recovered acid from the process must have a significant utility in the operation from which it was derived. In general, an acid strength more than 80% of fresh acid, and a contaminant level less than 50% of spent acid are necessary.

- The technology must have a high availability.

3.2 PHYSICAL SETUP AND OPERATION

Two separate diffusion dialysis units were deployed in this project. One was setup at Tobyhanna Army Depot, Tobyhanna, PA. The other was setup at the Rock Island Arsenal, Rock Island, IL. Both units were manufactured by Zero Discharge Technologies, Inc., Chicopee, MA, and each had a rated processing capacity of 20 gallons per day.

The unit at Tobyhanna Army Depot was setup as a batch operation to process both spent copper bright dip (CBD) and spent magnesium bright dip (MBD). CBD is a 50:50 mixture of concentrated sulfuric and nitric acids. It is used at the depot to remove oxidation and films from parts that have undergone hydrochloric acid treatment. This includes not only components made from copper but also stainless steel, brass, and assorted iron-based alloys. It is also used at the depot for the removal of heavy oxidation from aluminum and aluminum/magnesium parts. MBD is a mixture of concentrated nitric acid, ammonium bifluoride, and water. It is principally used for the removal of oxidation from the surfaces of magnesium parts. However, it is also used on composite aluminum/magnesium parts.

CBD and MBD are used at the facility in 30 and 10 gallon batches respectively. The bright dips are removed from service after two weeks of processing. At that time, about 25 and 6 gallons of contaminated copper and magnesium bright dips remain, the balance being lost to dragout and entrainment. At Tobyhanna Army Depot, the diffusion dialysis unit was operated when a sufficient quantity of one of the spent acids had been accumulated for a sustained operation (i.e., more than 20 gallons).

The unit at the Rock Island Arsenal was setup as a continuous operation serving a 4000-gallon chromium-stripping tank. A 50:50 mixture of hydrochloric acid and water is used by the arsenal in this tank. The working volume is 3,600 gallons. This tank is used principally to strip chromium from defective plated parts prior to replating. However, it is also used to derust parts. Every type of substrate except stainless steel is processed in this tank. The highest production item that passes through the tank at the arsenal is the 120-

mm Gun Mount for the M1A1 Abrams Tank. The contents of this tank are disposed once or twice a year depending upon the workload.

At the Rock Island Arsenal the diffusion dialysis unit was operated continuously, 24 hours per day, 7 days per week, for 22 weeks.

For each batch of acid and in the case of the continuous setup at Rock Island, the units were started up as follows. For four hours, deionized water and the acid were passed through the unit at estimated final values to purge and equilibrate the system. Then the flow rate of each stream was determined by directing the output to a graduated cylinder and measuring the accumulated volume over a period of time. Then the acidity of the collected streams was determined by titration with standard base to determine the performance of the unit. If the acidity of the recovered acid stream was significantly less than the contaminated acid feed, the flow of deionized water to the unit was decreased. If the acidity was acceptable but the overall acid recovery was low, then the flow of deionized water was increased. An hour later, this sampling and analysis was repeated and flows were adjusted again. This was repeated until the performance was considered acceptable.

3.3 MEASUREMENT OF PERFORMANCE

After the startup period, the performance of each unit with each acid was measured extensively. In the case of the batch runs at Tobyhanna, the flow rates, acidities, acid anion concentrations, and aluminum, cadmium, copper, chromium, iron, and nickel concentrations for the two product streams were determined twice per day. At Rock Island, the same assessment was initially performed daily on the two product streams from the unit and the composition of the chromium-stripping bath was also determined. In addition, manganese, molybdenum, tin, and zinc were added to the list of metals to be quantified. Later, the sampling and analysis at Rock Island were relaxed to once per week when it was evident that the unit was running very reliably and delivering consistent performance. These measurements were then used to calculate acid recovery, metals rejection, and deionized water usage. The methods that were used to quantify the analytes are summarized in Appendix A of reference 8.

At Tobyhanna, the recovered acid from the runs was accumulated. The purpose of this accumulation was to use the recovered acid in the Tobyhanna bright dip operations to determine the activity and life of the recovered acid.

4.0 PERFORMANCE ASSESSMENT

This project demonstrated that diffusion dialysis is effective at recovering nitric acid, sulfuric acid, hydrofluoric acid, hydrochloric acid and combinations of these acids from most metal contaminated acid streams. The complete operating data from the demonstrations with CBD, MBD, and chrome stripping agent are available in Appendices B, C and D of reference 8. The only acid streams for which diffusion dialysis may not be technically viable are those where the major metal contaminants form negatively charged complexes with the acid anion. This is known to occur in high strength hydrochloric acid streams where the major metal contaminants are either cadmium, zinc, molybdenum, copper, or tin. In these cases, diffusion dialysis probably is not a technically viable approach to recovering the acid values of spent acids. The technology does not pose additional health or safety risks to the operators beyond that already present in metal finishing operations and its implementation should not require any significant permitting changes at a facility.

4.1 ACID RECOVERY FROM SPENT COPPER AND MAGNESIUM BRIGHT DIP

At Tobyhanna, six ~20 gallon batches of spent CBD and two ~14 gallon batches of spent MBD were processed through the diffusion dialysis unit. The original plan was to process four batches of each but the slow accumulation of spent MBD precluded this. In consequence, it is possible that processing parameters for MBD treatment were not fully optimized. The average operating characteristics and performance of the unit during the runs is summarized in Tables 1 and 2. A complete set of results can be found in reference 8.

The system provided nearly identical results for these two contaminated streams. About 70% of the acid was recovered, about 70% of the metals were rejected and the acidity of the recovered acid stream was about 85% of the value of the contaminated stream. In addition, the metals behavior in the unit was similar for both streams. Aluminum and chromium rejection was about 85%, iron and nickel rejection was about 80% and copper and cadmium rejection was between 60 and 70%. Acid recoveries and metals rejections were lower than expected or desired, but the technology did provide a meaningful separation of the acids from the contaminants.

The impact of the lower than expected acid recoveries and metals rejections is a shorter service life for the recovered acid. This, in turn, means that if diffusion dialysis is implemented on these operations the amount of acid that will need to be processed by diffusion dialysis will be more than expected.

The results also show different recovery rates for the various acids. In the case of the CBD, 85% of the nitric acid but only 64% of the sulfuric acid was recovered. In the case of the MBD, about 70% of both the nitric and hydrofluoric acids were recovered but only 50% of the ammonia. These results indicate that if the technology is deployed and the recovered acid recycled, the fresh acid makeup recipe may have to be changed to produce a composition bath of similar composition to that in current use.

Table 1. Performance of Diffusion Dialysis System with Spent Copper Bright Dip at Tobyhanna Army Depot

Feed Flow Rates:
Spent Acid = 7.4 gallons per day
DI Water = 3.7 gallons per day

Product Flow Rates:
Recovered Acid = 5.9 gallons per day
Depleted Acid = 5.2 gallons per day

Analyte	Stream			% Rejection
	Spent Acid	Recovered Acid	Depleted Acid	
Acidity	19.8 N	17.2 N	8.6 N	31.0
HNO_3	5.81 N	5.22 N	1.41 N	15.4
H_2SO_4	13.99 N	11.99 N	7.19 N	36.1
Al	5 mg/l	1 mg/l	7 mg/l	87
Cd	184	43	106	71
Cu	1324	439	1050	66
Cr	2	0	3	83
Fe	253	65	256	79
Ni	102	18	70	78

Total Spent Acid Processed = 138 gallons (6 batches)
Average Acid Recovery = 69%
Average Metals Rejection = 69%

Table 2. Performance of Diffusion Dialysis System with Spent Magnesium Bright Dip at Tobyhanna Army Depot

Feed Flow Rates:
Spent Acid = 9.6 gallons per day
DI Water = 4.5 gallons per day

Product Flow Rates:
Recovered Acid = 7.4 gallons per day
Depleted Acid = 6.7 gallons per day

Analyte	Stream			% Rejection
	Spent Acid	Recovered Acid	Depleted Acid	
Acidity	13.0 N	11.5 N	6.0 N	32
HNO_3	12.9 N	10.6 N	4.8 N	29
HF	0.8 N	0.7 N	0.4 N	33
NH_3	1.1 N	0.6 N	0.7 N	50
Al	89 mg/l	12 mg/l	80 mg/l	85
Cd	4265	2079	3123	59
Cu	6250	2911	5491	63
Cr	34	6	34	85
Fe	1816	442	2013	82
Ni	993	315	917	74

Total Spent Acid Processed	= 28 gallons (2 batches of ~14 gallons)
Average Acid Recovery	= 68%
Average Ammonia Recovery	= 50%
Average Metals Rejection	= 65%

4.2 PERFORMANCE OF RECOVERED ACID FROM SPENT COPPER BRIGHT DIP IN COPPER BRIGHT DIP OPERATIONS

At Tobyhanna Army Depot, the CBD that was recovered using the diffusion dialysis unit was reused in the bath as a 50:50 mixture with virgin acid. The purpose was to determine the useful life of the recovered acid. This test, conducted independently by the depot personnel, indicated that the recovered CBD had about 60% of the service life of virgin CBD. The mixture lasted for 8 days as compared to 10 days for the virgin acid.

4.3 PERFORMANCE OF RECOVERED ACID FROM SPENT MAGNESIUM BRIGHT DIP IN MAGNESIUM BRIGHT DIP OPERATIONS

The recovered MBD was also to be reused at the depot to determine its length of service, but an insufficient amount was generated during the test period. However, based on the metals content and acidity of the recovered MBD, its service life was estimated at 45 % that of virgin MBD (see Appendix F of reference 8).

4.4 CONTAMINATED HYDROCHLORIC ACID PROCESSING WITH DIFFUSION DIALYSIS

At the Rock Island Arsenal, about 1250 gallons of chromium stripping agent was processed through the diffusion dialysis unit and returned to the bath over a 22 week period. During that period, the unit operated continuously and almost without incident. On two occasions, minor torquing of the membrane stack was required to eliminate a small amount of weepage from the stack. And once during the period, the particulate filter element was replaced. This filter is used to remove particulate from the contaminated acid prior to feeding through the membrane stack where the particulate could easily plug the stack or damage the membranes. The performance of the unit at Rock Island is summarized in Table 3.

In some respects, the performance of the unit at Rock Island was similar to the performance at Tobyhanna. Acid recovery was about 75% and the acid strength of the recovered acid was about 92% of the acid fed to the unit. However, metals rejection by the unit was much poorer. Aluminum and nickel rejections were as expected at 83 and 78% respectively, but copper, molybdenum, and tin rejections were less than 40% and cadmium and zinc rejections were less than 20%. The cause for this poor rejection of the copper, molybdenum, tin, cadmium, and zinc is attributable to the formation of negatively charged chloride complexes by these metals in high strength hydrochloric acid solutions. As negatively charged complexes, they transport through the ion exchange membrane at a similar rate to the acid anion. This indicates that when one or more of these metals are predominant contaminants in hydrochloric acid, diffusion dialysis will probably not be a technically viable means of recovering the hydrochloric acid. Fortunately, at Rock Island, these metals represented only about 2% of the total metals content of the acid; therefore, these low separations were tolerable.

Table 3. Performance of Diffusion Dialysis System on Chromium Stripping Acid at Rock Island Arsenal

Feed Flow Rates:
Bath Acid = 8.1 gallons per day
DI Water = 5.5 gallons per day

Product Flow Rates:
Recovered Acid = 6.6 gallons per day
Depleted Acid = 7.0 gallons per day

Analyte	Stream			% Rejection
	Bath Acid	Recovered Acid	Depleted Acid	
Acidity	6.1 N	5.6 N	1.8 N	25
Al	14 mg/l	4 mg/l	17 mg/l	83
Cd	89	90	12	13
Cu	8	7	4	39
Cr	304	105	225	67
Fe	4022	2146	2878	58
Mn	20	10	19	67
Mo	5	4	2	34
Ni	102	18	70	78
Sn	5	4	2	35
Zn	15	16	4	18

Total Spent Acid Processed = 1250 gallons (continuous)
Average Acid Recovery = 75%
Average Metals Rejection = 58%

4.5 IMPACT OF DIFFUSION DIALYSIS PROCESSING OF CONTAMINATED HYDROCHLORIC ACID ON CHROME STRIPPING ACTIVITY

Because the operation at Rock Island was continuous, only a qualitative assessment of the value of the diffusion dialysis treatment was possible. For this, the operators were asked to provide their opinion on the activity of the bath relative to its activity prior to treatment. The operators indicated that the activity of the bath after treatment through the diffusion dialysis process was equal to or greater than its previous activity. A possible explanation is that the constant background concentration of contaminants was not high enough to interfere with the stripping process and allowed consistent performance because it did not fluctuate over time.

5.0 COST ASSESSMENT

Based on the performance measurements, life cycle costs were estimated for deploying diffusion dialysis at the two demonstration sites in accordance with the Environmental Cost Analysis Methodology (ECAM)[9] recommended by the ESTCP program office. The ECAM methodology is an activity-based costing approach that ensures that cost savings due to reductions in all secondary environmental activities (such as training, sample analysis and regulatory paperwork), which are often hidden as overhead charges, are captured. An interest rate of 6% and a ten-year life were assumed. These life-cycle costs were then compared with current operating costs to assess the cost-effectiveness of the technology.

These cost assessments indicate that implementation of diffusion dialysis on these operations at their current workloads is only marginally attractive. The discounted payback period for deployment of a unit at Tobyhanna Army Depot was 3 to 4 years. At the Rock Island Arsenal, the estimated payback period was 9 to 10 years. Subsequent calculations suggest that the workload at Tobyhanna would have to double (equating to 1,536 gallons per year of spent acids from current CBD/MBD operations) for the payback period to be less than two years. At Rock Island, even quadrupling the workload only reduced the payback period to 5 to 6 years, indicating that an even larger increase would be necessary to achieve cost-effective operation.

For both types of spent acid, the current cost of the acid bath operations must be greater than $20,000 per year for the payback periods to be less than two years. The following provides specific details on the cost assessments.

5.1 CASE 1: TOBYHANNA ARMY DEPOT COPPER AND MAGNESIUM BRIGHT DIP PROCESSING

At Tobyhanna Army Depot, two scenarios were initially considered for deployment of diffusion dialysis. Both employed diffusion dialysis as a stand-alone batch process so that a single unit could be used to process both spent bright dips. In both cases, it was assumed that the metal contaminated stream from the diffusion dialysis unit would be treated in the on-site industrial waste treatment plant. The first scenario assumed that the spent bright dip from each process would be accumulated in separate 55-gallon drums. When at least 50 gallons of spent bright dip had been accumulated, the contents of the drum would be processed through the diffusion dialysis unit. The recovered acid stream would then be accumulated for reuse in the operation. In the second scenario, it was assumed that more spent acid would be accumulated before reprocessing in the diffusion dialysis unit (to reduce labor costs and amount of unrecovered acid). In the case of the spent copper bright dip, it was assumed that after 4 drums of spent acid had been accumulated, it would be reprocessed. In the case of the spent magnesium bright dip it was assumed that two 55-gallon drums of the material would be accumulated before being reprocessed. These volumes of accumulation were selected assuming the facility did not have an EPA Treatment Storage Disposal Facility permit.

The service life of the recovered acid from the spent CBD was assumed to be 58% of that for the fresh CBD. The service life for the recovered acid from the spent MBD was assumed to be only 45% of that

for fresh MBD. With these assumed service lives for the recovered acids, the annual operating scenarios for both cases were developed as described in reference 8. The results are summarized in Table 4.

Table 4. Impact of Diffusion Dialysis Implementation on Bright Dip Operations at Tobyhanna Army Depot

Scenario	Current Operation without Diffusion Dialysis		With Diffusion Dialysis			
			Case 1 Process Spent Acids in 50-55 gal batches		Case 2 Process CBD in 200 gallon batches, MBD in 100 gallon batches	
Operation	**CBD[1]**	**MBD[2]**	**CBD**	**MBD**	**CBD**	**MBD**
Bath Makeup, gpy						
Fresh Acid	750	275	426	177	379	162
Recovered Acid	0	0	605	250	652	265
Disposition, gpy						
Dragout	188	69	188	69	188	69
Spent Acid	562	206	845	358	845	358
Waste Acid						
Gallons	562	206	661	275	615	260
Acidity, N	19.8	13.0	7.58	5.72	8.16	6.42

[1] CBD = Copper Bright Dip
[2] MBD = Magnesium Bright Dip

The projections indicate that implementation of diffusion dialysis on these two operations at Tobyhanna has the potential to decrease CBD and MBD consumption by as much as 50% and 41% respectively. However, the overall life of the CBD and MBD baths with recovered acid usage decreases by about 29% and 36% respectively. This means that more labor is required to replace and maintain the bath acids. However, without diffusion dialysis, labor is required to containerize, placard and maintain records for disposal of the waste acid as a hazardous waste. These projections also indicate that the diffusion dialysis system would have to process about 1200 gallons of spent acid per year or about 6 gallons per day, assuming 200 operating days per year. This indicates that a 10-gallon per day diffusion dialysis unit would be large enough for this operation.

In the cost assessment, the labor requirement for replacing the contents of a bath was assumed to be one hour. The labor requirement for placarding and preparing documentation for disposing of the waste acid as a hazardous waste was assumed to be 1/2 hour. Finally, the labor requirement for operating the diffusion dialysis unit was assumed to be 2 hours per run.

The cost of treating the metal contaminated stream from the diffusion dialysis unit in the on-site IWTP was determined by calculating the amount of caustic needed to neutralize the stream and precipitate the metals, and calculating the additional amount of sludge that would be produced. These values were then translated into operating costs assuming no additional labor would be required at the plant as a result of accepting this stream for treatment.

This assessment, which is shown in Table 5 indicates that the second scenario in which the contaminated acid was accumulated over a 90 day period before processing is the least cost approach with a net annual operating cost savings of $7,792 for an investment of $22,257. However, this still provides a discounted payback period of more than 3 years.

Table 5. Impact of Diffusion Dialysis Implementation on the Cost of Tobyhanna Army Depot Copper and Magnesium Bright Dip Operations

Cost Element	Current Operation	Case 1	Case 2
Capital Costs (10 gals/d)			
Equipment	$0	$12,215	$12,215
Installation	0	7,000	7,000
Start-Up	0	3,000	3,000
Total Capital Costs	$0	$22,215	$22,215
Annual Operating Costs			
Acid Purchases	$17,361	$10,200	$9,144
Utilities	0	36	36
Labor	5,985	9,495	7,022
HazWaste Disposal	3,911	48	48
IWTP Treatment	0	287	267
Lab Analysis	0	1656	1060
Maintenance	0	1889	1889
Total Operating Costs	$27,257	$23,611	$19,466
Discounted Payback Period, yr	--	7-8	3-4

Because of the long payback periods of both scenarios, the impact of larger workloads on the cost effectiveness of diffusion dialysis at Tobyhanna was assessed. Two cases were considered: doubling and quadrupling the workload of each operation. This assessment indicated that if the workload were doubled, implementing diffusion dialysis would have a discounted payback period of 1 to 2 years. If the workload were quadrupled, the discounted payback period would be less than 1 year.

Although a discount rate of 6% is an appropriate conservative rate for use by the private sector, use of 3.5% discount factor for government facilities (as recommended by OMB) would also improve the attractiveness of a diffusion dialysis installation slightly. The payback period for Case 2 in Table 5 would be reduced to below 3 years.

To complete this sensitivity analysis, another important scenario in which no on-site IWTP was available (i.e., assuming the hazardous waste disposal option were retained for depleted acid) was considered for Case 2 using the lower discount rate. A payback period of 4 to 5 years was obtained.

5.2 CASE 2: CHROMIUM STRIPPING BATH IMPLEMENTATION AT ROCK ISLAND ARSENAL

At Rock Island, three operating scenarios were considered for deployment of diffusion dialysis on the chrome-stripping. All three used diffusion dialysis in a continuous mode. The recovered acid was returned directly to the acid tank while the metal contaminated depleted acid stream from the diffusion dialysis unit was sent directly to the on-site IWTP for treatment.

The difference in the three operating scenarios was the projected acid recovery and metals rejection of the diffusion dialysis unit and the desired steady-state concentration of the metals in the acid bath. The first scenario assumed that the diffusion dialysis unit would recover 75% of the acid it processed and reject 58% of the metals. This corresponded to the average performance of the unit during the entire test period. In the second and third scenarios it was assumed that the unit would recover 90% of the acid and reject 61% of the metals. This corresponded to the performance of the unit near the end of the test period that was due to continuous adjustments to the unit operating parameters as the result of operating results. In the first two scenarios it was further assumed that the concentration of the metals in the acid bath would be kept at about 50% of the value when the acid is normally discarded. This should provide a bath activity that is equivalent to the average activity of the bath during its entire lifetime. The third scenario relaxed the steady state metals concentration in the bath to 75% of the value of the spent acid. This should provide a bath with roughly 50% of the average activity of the bath during its lifetime.

The impact of diffusion dialysis on acid consumption under the three scenarios is shown in Table 6. With 75% acid recovery, 58% metals rejection, and an objective of maintaining the metals content of the bath to 50% of its final value, acid consumption is reduced from 1855 to 1606 gallons per year, a 13% decrease. With 90% acid recovery, 61% metals rejection and an objective of maintaining the metals concentration in the bath at 50% of the final value, acid consumption is reduced to 645 gallons per year, a 65% decrease. Finally, relaxing the objective for metals content of the bath to 75% of the final value, the acid consumption is reduced to 445 gallons per year, a 76% decrease. Based on these projections, the life cycle cost for the three scenarios were calculated and compared to the cost of the current operation where the bath contents are disposed once per year at a cost of about $10,000. These costs are presented in Table 7. As seen, the discounted payback period for diffusion dialysis is quite long. In the first two cases, it is greater than 10 years. In the third case where the quality objective for the active bath has been reduced, the payback period is still exceptionally long at 8 to 9 years.

As at Tobyhanna, the impact of increasing the workload at Rock Island on the cost effectiveness of diffusion dialysis implementation was assessed because of the long payback periods. Assuming an acid recovery of 75%, a metals rejection of 58%, a process objective of maintaining the metals content at 50% of the spent value, and doubling the workload decreased the payback period to between 7 and 8 years. Quadrupling the workload under the same assumptions decreased the payback period to between 5 and 6 years. This suggests that diffusion dialysis treatment of chrome-stripping solutions may not be cost-effective under any realistic operational circumstances due to the low value of the recovered hydrochloric acid. It appears that applying the technology to relatively low cost hydrochloric acid streams may be impractical not only from a technological viewpoint but also from a cost viewpoint.

It is useful to compare projected costs for recycling hydrochloric acid from the chromium stripping bath with a preliminary theoretical cost analysis (performed prior to the demonstration by Concurrent Technologies Corporation (CTC)[10]) for continuous recycling of hydrochloric acid from an acid-dip tank at Tobyhanna Army Depot. CTC employed the ECAM methodology. A summary of the preliminary cost analysis for the best case scenario of 100% reduction in hazardous waste is presented in Table 8. There is a significant difference between the preliminary cost analysis performed by CTC, shown in Table 8, and the cost analysis resulting from the actual demonstration

Table 6. Projected Impact of Diffusion Dialysis Performance and Process Objectives on Diffusion Dialysis Processing Requirements and Acid Consumption in a Chrome Stripping Bath at Rock Island Arsenal

	Current Operation	With Diffusion Dialysis		
Diffusion Dialysis Performance				
Acid recovery	N/A	75%	90%	90%
Metals Rejection	N/A	58%	61%	61%
Process Objective[1]	N/A	0.5	0.5	0.75
Required Diffusion Dialysis Processing Rate, gpd	0	34	32	21
Annual Acid Consumption, gal	1855	1606	645	445

[1]Ratio of equilibrium metals concentration in bath with diffusion dialysis/metals concentration when bath is spent.

Table 7. Impact of Diffusion Dialysis Implementation on the Cost of Chrome Stripping Operations at the Rock Island Arsenal

Cost Element	Current	With Diffusion Dialysis		
		AR[1] = 75% MR[2] = 58% SSMC[3] = 0.5	AR = 90% MR = 61% SSMC = 0.5	AR = 90% MR = 61% SSMC = 0.75
Capital Costs (20 gals/d)				
Equipment	$0	$28,215	$28,215	$22,215
Installation	0	7,000	$7,000	7,000
Start-Up	0	3,000	$3,000	3,000
Total Capital Costs	$0	$38,215	$38,215	$32,215
Annual Operating Costs				
Acid Purchases	$2,189	$1,831	$606	$405
Utilities	2	139	138	134
Labor	1,915	1,915	1,915	1,915
HazWaste Disposal	10,000	4,182[4]	4,182[4]	4,182[4]
IWTP Treatment	0	716	220	138
Lab Analysis	0	224	224	224
Maintenance	0	2,528	2,528	2,528
Total Operating Costs	$14,106	$11,538	$9,815	$9,288
Discounted Payback Period, yr	--	>10	>10	8-9

[1]AR = Acid Recovery

[2]MR = Metals Rejection

[3]SSMC = Steady State metals content of bath relative to spent acid.
[4]Includes additional sludge production in IWTP and change out of bath every 5 years.

at Rock Island, shown in Tables 6 and 7. This difference may be explained as follows. The preliminary cost assessment performed by CTC predicted a payback period of 0.9 years. However it did not include any installation, start-up and training costs for the unit, and it assumed no additional labor requirement for operating the diffusion dialysis unit. Also, it assumed that labor requirements for containerizing and disposing the spent hydrochloric acid solution in the current process was more than 18 hours per drum. Therefore, it had highly inflated existing operating costs that were eliminated by installing the diffusion dialysis process, as well as deflated capital costs for the diffusion dialysis system. The cost assessment presented in Table 7 is based on the results of the demonstration, realistic assumptions, and show realistic paybacks. However, the preliminary cost assessment does indicate the extreme sensitivity of payback to labor costs associated with hazardous waste handling. Caution should also be exercised while predicting additional labor costs for diffusion dialysis system operation, particularly for batch operations.

It is likely that two conditions must exist if diffusion dialysis is to be economically justified. First, the cost of makeup acid and spent acid disposal most likely must exceed $20,000 per year. Second, the facility must have an on-site ITWP that will accept the depleted acid from the diffusion dialysis unit. An on-site IWTP is critical to the economic viability of deploying diffusion dialysis because the volume of the waste stream from the operation with diffusion dialysis typically would exceed the volume of waste without it. Although the waste would be far less acidic, it would still be hazardous in terms of both acidity and toxic metals content. A lower acidity does not generally reduce the cost of disposal on a per gallon basis. Therefore, if the depleted acid from the diffusion dialysis system must be containerized and disposed as a hazardous waste, diffusion dialysis will not reduce hazardous waste disposal costs.

Table 8. Preliminary Cost Assessment for Hydrochloric Acid Recovery

Cost Element	Current Operation	Diffusion Dialysis 7.5 gals/d continuous (100% elimination of hazardous waste)	Diffusion Dialysis 7.5 gals/d continuous (100% elimination of hazardous waste)
Capital Costs ($)	$0	$15,000	$15,000
Discount Rate	3.5%	3.5%	6%
Annual O&M Costs			
HCl solution	$3,450	$3,077	$3,077
Utilities	$0	$0	$0
Maintenance	$0	$0	$0
Labor (for DD)	$0	$0	$0
Labor (for hazardous waste disposal)	$12,000	$0	$0
Hazardous waste disposal	$2,982	$0	$0
IWTP Treatment (DD)	$0	$26	$26
Sub-total	$18,432	$3,103	$3,103
Other Environmental Activity Costs	$4,782	$2,220	$2,220
Total annual O&M Costs ($)	$23,214	$5,323	$5,323
Annual Savings ($)		$17,891	$17,891
Discounted Payback Period (yrs.)		0.9 years	0.9 years

NOTES:

1. CTC assumed no installation or start-up costs.
2. CTC cost assumed only 11% reduction in fresh HCl purchase, thus this cost saving is relatively small.
3. The additional environmental costs revealed by the ECAM activity-based costing approach site are relatively small (except for current 2 hrs/drum labor for moving hazardous waste drums on site).
4. CTC assumed no labor (above existing acid dip labor) was required to operate the DD unit.
5. CTC assumed existing hazardous waste handling required over 18 hours labor/drum. Thus, assumed labor cost savings are extremely high.
6. A cost analysis using 6% discount factor was not provided by CTC. Calculations in this column are provided for purposes of comparison. Using a 6% discount factor has little effect on a short payback.

This page was intentionally left blank.

6.0 IMPLEMENTATION ISSUES

6.1 COST OBSERVATIONS

The major cost savings provided by the diffusion dialysis process are acid purchase and hazardous waste disposal of these high strength spent acids. These cost savings depend on the following factors:

Value of acids being recovered. The mix of HNO_3 and H_2SO_4 used in CBD costs $17.49/gal, and the mix of HNO_3 and NH_3/HF used in MBD costs $15.44/gal, whereas HCl costs only $1.18/gal (see appendices H and I of reference 8). Use of diffusion dialysis for recovery of HCl is unlikely to be cost-effective at any scale of operation.

Availability of an on-site IWTP for treatment of depleted acid waste stream from the diffusion dialysis process. The cost assessment in Table 5 treats the *depleted* acid from the CBD/MBD diffusion dialysis unit (which was relatively high strength at 6-8N) in the ITWP for a cost of $0.31/gal, but sends the *spent* acid from the original process (at 13-20N) off-site for disposal as hazardous waste at the high cost of $5.09/gal. The inherent assumption is that 6-8N waste acid would not disrupt ITWP operations, although an even smaller volume of 13-20N acid would. If this assumption were inappropriate, the cost-effectiveness would be less attractive with payback increased from 3 years to 4 to 5 years.

Scale of operation. Larger diffusion dialysis plants allow economy-of-scale. A minimum production rate of 1,500 gallons per year spent acid from the current CBD/MBD processes (equating to a minimum cost of $20,000/yr for fresh make-up acid and spent acid disposal) is necessary for an acceptable payback of less than 2 years. Intermittent use, or use below full plant capacity, also detracts from the cost-benefit of diffusion dialysis. The smallest commercially available diffusion dialysis unit costs around $25,000.

Cost effectiveness is a major issue with regard to implementation of diffusion dialysis, and therefore any future diffusion dialysis installation being contemplated should be evaluated on a case-by-case basis. The cost assessments indicate that reasonable payback periods are not obtained with diffusion dialysis unless the costs associated with the operation(s) to which diffusion dialysis is applied are on the order of $20,000 per year. Furthermore, it appears that applying the technology to relatively low cost hydrochloric acid streams may be impractical not only from a technological viewpoint but also from a cost viewpoint.

6.2 PERFORMANCE OBSERVATIONS

As demonstrated in this project, diffusion dialysis is an easy-to-operate and reliable technology. Once the unit is setup and operating, it provides steady performance for months with minimal operator attention. In addition, diffusion dialysis can recover a wide variety of acids, including nitric, hydrofluoric, sulfuric, and hydrochloric acid from high strength solutions without dilution. Finally, the recovered acid from a diffusion dialysis unit can be reused without further processing. However, the life of the recovered acid is less than virgin acids and this must be taken into account. This can increase the frequency of change-out by as much as 60%.

The performance of diffusion dialysis with specific metal/acid combinations is an issue. In particular, the technology is incapable of rejecting cadmium, copper, molybdenum, tin, and zinc in high strength hydrochloric acid solutions. These metals form negatively charged chloride complexes that permeate through the diffusion dialysis membrane as rapidly as the acid. Therefore, the recovered acid has nearly the same amount of these metals as the spent acid from which it was produced. When one or more of these metals is the major contaminant in the hydrochloric acid, diffusion dialysis will not produce any noticeable separation and the recovered acid will have little if any value.

Finally, membrane life may be an issue. The cost assessments performed in this project assumed the membrane would last for four years in accordance with manufacturer's claims. The membranes in this project only experienced a few months of service but during that time, no deterioration in performance was evident.

6.3 END USER/OEM ISSUES

A significant issue with diffusion dialysis is the volume of waste solution that is produced by the process. The only difference is that the acid content is 70 to 90% lower. Containerizing and disposing of this stream as a hazardous waste would likely make the cost of the technology unacceptable in most situations. At the demonstration sites, this waste stream was readily treated in an on-site IWTP making the cost of disposal only a fraction of the cost of disposal as a hazardous waste. However, this may not always be the case. The potential end user should assess the treatability of this stream in their IWTP before implementation of the technology.

The flexibility of a batch-mode diffusion dialysis unit installed to treat several different spent acid streams is attractive, and may be feasible cost-wise in certain, specific situations. However, for batch-mode installations treating several different spent acid streams, each acid would be run separately, optimum processing conditions may vary, and the diffusion dialysis unit would have to be thoroughly flushed after each run. Thus, labor requirements would be difficult to predict. The most favorable paybacks are obtained when labor costs, as a proportion of total costs, are reduced. Also, during the demonstration, the volume of depleted acid produced by batch-mode processing was greater than the volume of spent acid for the current process.

7.0 REFERENCES

1. "Diffusion Dialysis" product technology information, at http://www.aqualytics.com, AQUALYTICS, Warren, New Jersey.

2. Bailey, Dan and Howard, Tim, "Acid Recovery with Diffusion Dialysis" Metal Finishing, 1992, November.

3. Deuschle, Andreas, "Diffusion Dialysis – An Economical Technology for Recovery of Acids From Pickling Processes," 14th AESF/EPA Conference on Environmental Control for the Surface Finishing Industry, 1993, January.

4. Reinhard, Fred P., "The Recovery of Used Acid Utilizing Diffusion Dialysis," 13th AESF/EPA Conference on Environmental Control for the Surface Finishing Industry, 1992.

5. "Acid Recovery Process Field Demonstration – Draft Final Operational Test Report," Arthur D. Little, Inc., Acorn Park, Cambridge, Massachusetts, to Naval Facilities Engineering Service Center, Port Hueneme, California, dated January 12, 1998. Reference 52353 Contract No. N47408-94-D-7410.

6. "Nitric Acid Recovery Using Diffusion Dialysis – Danaher Tool Group, Springfield, Massachusetts" The Toxic Use Reduction Institute Cleaner Technology Demonstration Sites Program, University of Massachusetts Lowell, Technical Report No. 32 (1996).

7. "Reclamation of Nitric Acid from Solder Strip – Printed Circuit Corporation" The Toxic Use Reduction Institute, University of Massachusetts Lowell, Technical Report No. 26 (1995).

8. "Spent Acid Recovery Using Diffusion Dialysis" Final Report submitted to Environmental Security Technology Certification Program by Naval Facilities Engineering Service Center, Port Hueneme, CA., January 31, 1999.

9. "Environmental Cost Analysis Methodology ECAM Handbook" Concurrent Technologies Corporation, NCDEE, Johnstown, PA, November 7, 1997, prepared for ESTCP. Available at http://www.estcp.org.

10. "Environmental Cost Analysis Methodology Implementation Report. Appendix 2 of 5: Tobyhanna Army Depot" Concurrent Technologies Corporation, Contract DAAA21-93-C-0046, Task No. 098, Environmental Security Technology Certification Program, January 7, 1998.

This page was intentionally left blank.

APPENDIX A

Points of Contact

Naval Facilities Engineering Service Center
Nick Stencel, Code ESC 421
560 Center Drive
Port Hueneme, CA 93043-4328
Telephone: (805) 982-1793
Fax: (805) 982-1409
E-mail: stenceln@nfesc.navy.mil

Rock Island Arsenal
SIORI-SEV, 4th Floor/Building 210
Attention: Tera Hill
Rock Island, IL 61299-5000
Telephone: (309) 782-7860
Fax: (309) 782-5038
E-mail: thill@ria-emh2.army.mil

Tobyhanna Army Depot
Patrick Tierney
11 Hap Arnold Boulevard
Tobyhanna, PA 18466-5075
Telephone: (570) 895-6724
Fax: (570) 895-6539
E-mail: ptierney@tobyhanna.army.mil

BENMOL Corporation
Gerald L. Anderson
1121 King Street
Alexandria, VA 22314
Telephone: (703) 683-4288
Fax: (703) 683-4635
E-mail: benmol-gla@erols.com

Frank E. Mitchell
1121 King Street
Alexandria, VA 22314

Telephone: (703) 683-4288
Fax: (703) 683-4635
E-mail: benmol@erols.com

ESTCP Program Office

901 North Stuart Street
Suite 303
Arlington, Virginia 22203

(703) 696-2117 (Phone)
(703) 696-2114 (Fax)

e-mail: estcp@estcp.org
www.estcp.org