FINAL REPORT

Portsmouth Naval Shipyard Microgrid and Ancillary Services

ESTCP Project EW-201350

AUGUST 2017

Anthony Colonnese
Ameresco, Inc.

Distribution Statement A
This document has been cleared for public release

Page Intentionally Left Blank

This report was prepared under contract to the Department of Defense Environmental Security Technology Certification Program (ESTCP). The publication of this report does not indicate endorsement by the Department of Defense, nor should the contents be construed as reflecting the official policy or position of the Department of Defense. Reference herein to any specific commercial product, process, or service by trade name, trademark, manufacturer, or otherwise, does not necessarily constitute or imply its endorsement, recommendation, or favoring by the Department of Defense.

Page Intentionally Left Blank

REPORT DOCUMENTATION PAGE

Form Approved
OMB No. 0704-0188

The public reporting burden for this collection of information is estimated to average 1 hour per response, including the time for reviewing instructions, searching existing data sources, gathering and maintaining the data needed, and completing and reviewing the collection of information. Send comments regarding this burden estimate or any other aspect of this collection of information, including suggestions for reducing the burden, to Department of Defense, Washington Headquarters Services, Directorate for Information Operations and Reports (0704-0188), 1215 Jefferson Davis Highway, Suite 1204, Arlington, VA 22202-4302. Respondents should be aware that notwithstanding any other provision of law, no person shall be subject to any penalty for failing to comply with a collection of information if it does not display a currently valid OMB control number.
PLEASE DO NOT RETURN YOUR FORM TO THE ABOVE ADDRESS.

1. REPORT DATE *(DD-MM-YYYY)*	2. REPORT TYPE	3. DATES COVERED *(From - To)*
08/15/2017	ESTCP Final Report	9/25/2013 - 9/24/2018

4. TITLE AND SUBTITLE
Portsmouth Naval Shipyard Microgrid and Ancillary Services

5a. CONTRACT NUMBER
Contract: 13-C-0027

5b. GRANT NUMBER

5c. PROGRAM ELEMENT NUMBER

6. AUTHOR(S)
Anthony Colonnese

5d. PROJECT NUMBER
EW-201350

5e. TASK NUMBER

5f. WORK UNIT NUMBER

7. PERFORMING ORGANIZATION NAME(S) AND ADDRESS(ES)
Ameresco, Inc.
111 Speen Street, Suite 410
Framingham, MA 01701

8. PERFORMING ORGANIZATION REPORT NUMBER
EW-201350

9. SPONSORING/MONITORING AGENCY NAME(S) AND ADDRESS(ES)
Environmental Security Technology Certification Program
4800 Mark Center Drive, Suite 17D03
Alexandria, VA 22350-3605

10. SPONSOR/MONITOR'S ACRONYM(S)
ESTCP

11. SPONSOR/MONITOR'S REPORT NUMBER(S)
EW-201350

12. DISTRIBUTION/AVAILABILITY STATEMENT
Distribution A; unlimited public release

13. SUPPLEMENTARY NOTES

14. ABSTRACT
The objective of this project is to demonstrate that the emerging technologies of Microgrid Control Systems (MCS) and Battery Energy Storage Systems (BESS) can be integrated with onsite generation at military bases to enhance the security and reliability of electric service to the base, provide valuable ancillary services to the electric grid Independent System Operator (ISO), and generate cost savings for the government.

15. SUBJECT TERMS
Microgrid, Ancillary Services, Battery Energy Storage System, Diesel Generator, Gas Turbine Generator, Intelligent Energy Device, Microgrid Control System, Multiprotocol Label Switching,

16. SECURITY CLASSIFICATION OF:			17. LIMITATION OF ABSTRACT	18. NUMBER OF PAGES	19a. NAME OF RESPONSIBLE PERSON
a. REPORT	b. ABSTRACT	c. THIS PAGE			Anthony Colonnese
					19b. TELEPHONE NUMBER *(Include area code)*
UNCLASS	UNCLASS	UNCLASS	UNCLASS	170	508-661-2291

Page Intentionally Left Blank

FINAL REPORT

Project: EW-201350

TABLE OF CONTENTS

Page

1.0 INTRODUCTION 1
- 1.1 BACKGROUND 3
- 1.2 OBJECTIVE OF THE DEMONSTRATION 4
- 1.3 REGULATORY DRIVERS 6

2.0 TECHNOLOGY DESCRIPTION 9
- 2.1 TECHNOLOGY OVERVIEW 9
- 2.2 TECHNOLOGY DEVELOPMENT 16
- 2.3 ADVANTAGES AND LIMITATIONS OF THE TECHNOLOGY 20

3.0 PERFORMANCE OBJECTIVES 23

4.0 FACILITY/SITE DESCRIPTION 35
- 4.1 FACILITY/SITE LOCATION AND OPERATIONS 35
- 4.2 FACILITY/SITE CONDITIONS 36

5.0 TEST DESIGN 39
- 5.1 CONCEPTUAL TEST DESIGN 39
- 5.2 BASELINE CHARACTERIZATION 41
- 5.3 DESIGN AND LAYOUT OF TECHNOLOGY COMPONENTS 45
- 5.4 OPERATIONAL TESTING 57
- 5.5 DATA COLLECTION 60
- 5.6 DATA RESULTS 64

6.0 PERFORMANCE ASSESSMENT 65

7.0 COST ASSESSMENT 83
- 7.1 COST MODEL 83
- 7.2 COST DRIVERS 85
- 7.3 COST ANALYSIS AND COMPARISON 85

8.0 IMPLEMENTATION ISSUES 93

APPENDIX A POINTS OF CONTACT A-1

APPENDIX B MCS/FLS COMMISSIONING AND PERFORMANCE VERIFICATION TEST (PVT) PLANS B-1

APPENDIX C PERFORMANCE VERIFICATION OF THE FAST LOAD SHED SOLUTION C-1

APPENDIX D EVENT LOGS FOR LIVE EVENT TESTING OF THE FAST LOAD SHED SOLUTION D-1

APPENDIX E FAST LOAD SHED SYSTEM DRAWINGS E-1

TABLE OF CONTENTS (Continued)

Page

APPENDIX F CMP INTERCONNECTION AGREEMENT AND ISO-NE REG MARKET CHECKLIST F-1

APPENDIX G BATTERY ENERGY STORAGE SYSTEM (BESS) AS-BUILTS G-1

APPENDIX H BATTERY ENERGY STORAGE SYSTEM (BESS) ELECTRICAL STUDIES H-1

APPENDIX I POWER PLANT INTERACTION REPORT I-1

APPENDIX J BESS FIRE SUPPRESSION SYSTEM J-1

APPENDIX K BESS FIELD QUALITY ISSUE TRACKING SHEET K-1

APPENDIX L IEEE WHITE PAPER: "EXPERIENCE WITH FAST LOAD SHEDDING USING IEC 61850 GOOSE" L-1

APPENDIX M DEPARTMENT OF ENERGY FEDERAL ENERGY REGULATORY COMMISSION M-1

LIST OF FIGURES

Page

Figure 2-1 MCS System Architecture 10
Figure 2-2 BESS Major Components 14
Figure 2-3 VAR Support Diagram 15
Figure 2-4 Saft Company Timeline 18
Figure 2-5 Installed U.S. Capacity Energy Storage Systems 18
Figure 2-6 ISO-NE Communications Architecture 20
Figure 2-7 Energy Storage Technology Range of Application 21
Figure 3-1 Deregulated Electricity Markets 30
Figure 4-1 Portsmouth Naval Shipyard Demonstration 35
Figure 4-2 Demonstration Site 36
Figure 5-1 Historic Regulation Clearing Prices 43
Figure 5-2 AGC Signal Model Data from ISO-NE 44
Figure 5-3 System Architecture Diagram 49
Figure 5-4 BESS Electrical Connection Diagram for PNS As-builts 53
Figure 5-5 Detailed Installation Drawing for SEL-735 Power Quality and Revenue Meter 54
Figure 5-6 Dynapower Site Controller Command Screen 55
Figure 5-7 Dynapower Site Controller ISO-NE Screen 56
Figure 5-8 BESS E-Stop Schematic from PNS As-builts 57
Figure 5-9 MCS/FLS Commissioning and PVT Schedule 58
Figure 5-10 BESS Installation through Demonstration Schedule 60
Figure 5-11 Main MCS/FLS HMI Screen 61
Figure 5-12 Example C90 Plus Report from October 16, 2016 LoU Event 63
Figure 6-1 Example of HMI Screenshot – Post Event Analysis 66
Figure 6-2 F-F35-1 Waveform Capture of July 18, 2016 Loss of Utility Event 74
Figure 6-3 HMI Trend Display – July 18 75
Figure 6-4 C90 Plus Load Shed Report – July 18, 2016 LoU Event 76
Figure 6-5 F-F35-1 Waveform and Event Capture – October 16, 2016 LoU Event 77
Figure 6-6 F-F35-1 Waveform and Event Capture – October 16, 2016 LoU Event 78
Figure 6-7 C90 Plus Load Shed Report – October 16, 2016 LoU Event 79
Figure 7-1 20 Year Economics of the 500kW-580kWh Saft IM20+ Battery Energy Storage System Participating in ISO-NE Regulation 89
Figure 7-2 Expected 20Yr Economics of a 500kW/500kWh BESS with 2017 Equipment Pricing Participating in ISO-NE Regulation 90

LIST OF TABLES

Page

Table 2-1 Operational Steps to Island 13
Table 3-1 Performance Objectives Phase I – MCS/FLS 24
Table 3-2 Performance Objectives Phase II - BESS 30
Table 6-1 Operational Steps to Island 67
Table 6-2 FLS Performance Verification Test Example 70
Table 7-1A Cost Model for Microgrid Control System with Fast Load Shed 83
Table 7-1-B Cost Model for Battery Energy Storage System (BESS) 84

ACRONYMS AND ABBREVIATIONS

AAC	Annual Avoided Cost
ATRR	Alternative Technology Regulation Resource
BESS	Battery Energy Storage System
CAISO	California Independent System Operator
CHP	Combined Heat and Power
CMP	Central Maine Power
DG	Diesel Generator
DNP3	Distributed Network Protocol
DOD	Department of Defense
ERCOT	Electric Reliability Council of Texas
ESPC	Energy Savings Performance Contract
ESTCP	Environmental Security Technology Certification Program
FERC	Federal Energy Regulatory Commission
FLS	Fast Load Shed
GE	General Electric
GOOSE	Generic Object Oriented Substation Events
GTG	Gas Turbine Generator
HMI	Human Machine Interface
HRSG	Heat Recovery Steam Generator
IA	Interconnection Agreement
IED	Intelligent Energy Device
IEEE	Institute of Electrical and Electronics Engineers
ISO	Independent System Operator
ISO-NE	Independent System Operator for New England
kW	Kilowatt
LOC	Lost Opportunity Cost
LoU	Loss of Utility
MCS	Microgrid Control System
MISO	Midwest Independent System Operator
MPLS	Multiprotocol Label Switching
MW	Megawatt
MWh	Megawatt Hours
ms	millisecond

NAVFAC	Naval Facilities Engineering Command
NIST	National Institute of Standards and Technology
NY-ISO	New York Independent System Operator
PJM	PJM Interconnection LLC
PNS	Portsmouth Naval Shipyard
PVT	Performance Verification Test
PWD-ME	Public Works Department - Maine
RTU	Remote Terminal Unit
SCADA	Supervisory Control and Data Acquisition
SCP	Site Commissioning Plan
SOC	State of Charge

1.0 INTRODUCTION

The objective of this project is to demonstrate that the emerging technologies of Microgrid Control Systems (MCS) and Battery Energy Storage Systems (BESS) can be integrated with on-site generation at military bases to enhance the security and reliability of electric service to the base, provide valuable ancillary services to the electric grid Independent System Operator (ISO), and generate cost savings for the government.

This project uniquely integrates several innovative technologies to provide cost-effective solutions for military energy surety. It includes a 500 kW / 580 kWh BESS to assure power quality on base at Portsmouth Naval Shipyard (PNS) during transitions from grid power to island power and to provide ongoing frequency regulation to the New England electrical grid. In addition, a new Microgrid Control System (MCS) will integrate the BESS and a variety of existing on-site generation assets to implement a "fast load shed" (FLS) scheme. The control system includes new metering so the MCS can intelligently select the loads to shed in order to balance with available on-site generation supply. The combination of the MCS and BESS will considerably enhance the value of the Navy's existing on-site generation assets in several ways.

- Existing generation assets include two 5.0 MW combustion turbines and two 1.5 MW emergency diesel generators. Yet this 13.0 MW of on-site generation capacity cannot currently prevent a facility wide blackout when grid power is unexpectedly lost. This is due to the Shipyard having an average peak load of 15MW to 18MW, which is greater than the available on-site generation, and the lack of an FLS scheme to shed non-essential loads.
- Batteries or flywheels can provide frequency regulation ancillary services to the ISO but are very expensive to install and operate. By combining a BESS with the on-site generation assets at the Shipyard, we expect to demonstrate that frequency regulation can be provided at a lower cost per capacity when compared to systems solely dedicated to providing ancillary services.

By deploying existing generation assets (which most military bases already have) in new ways through the systems proposed here, the government can generate revenues (from the sale of ancillary services to the ISO) that could not be previously exploited without the BESS. We believe our proposed system provides a more cost-effective way to capture revenues when compared to other battery or flywheel installations where the core function may be to solely provide an ancillary service.

This investment will significantly enhance the energy security of the Shipyard by maintaining power to all critical loads in the event of a loss of grid supply, avoiding otherwise lost production time and costs. Net energy costs will also be reduced due to revenues from the provision of Ancillary Services to the ISO-NE grid. If successful, the potential for broad implementation of this system across U.S. Government installations is promising. The demonstration will be split into two phases.

Phase I - MCS/FLS will integrate GE's Microgrid Control System (MCS) with Fast Load Shedding (FLS) to demonstrate Islanding and Energy Surety for the Shipyard. The MCS will exercise control of the BESS during "Microgrid" operation.

2014

- June - Nov – Design of the MCS architecture to be incorporated into the facility's infrastructure.
- Aug - Dec – Order components, build, and test system at GE facility.

2015

- Jan - Sept – Install infrastructure on-site
- Oct - Dec – Commissioning and Performance Verification Testing

2016

- Jan - Dec – Demonstration of MCS and BESS capability to Island.

Phase II - **BESS** participation in ISO-NE's Regulation Market

2014

- Jan - May – Design, manufacturing, and installation of the BESS components.
- June – Integration Testing, Commissioning
- Signed Interconnection Agreement (IA) and Activation in ISO-NE's Regulation Market.

Note: We were unsuccessful in getting an IA in place between the utility Central Maine Power and the Navy in time to participate in the ISO-NE Pilot program which expired at the commencement of the new active market rules implemented by ISO-NE effective April 2015 and approved by FERC. CMP and the Navy initially signed the agreement in August of 2014, however complications with the Navy's contracting process delayed full acceptance and modification to an existing contract with CMP and was not completed until May of 2015.

(Copies of the IA and Contract are found in Appendix F)

The new rules include a requirement of a 1MW minimum capacity, Ameresco is looking forward to future participation in this program by increasing BESS capacity at PNS to over 1MW during development of an Energy Savings Performance Contract (ESPC) presently in development)

2016

- Jan - Dec – Continue operation of BESS under Phase I

1.1 BACKGROUND

The Microgrid Control System (MCS) will significantly enhance the energy security of the Shipyard by maintaining power to designated critical loads in the event of a loss of grid supply as long as sufficient local generation is connected and live at the moment of the grid loss, to maintain the minimum of critical feeder loads. The MCS will control the BESS output during a "Loss of Utility" (LoU) event by interfacing with the Battery Energy Storage System (BESS) Site Controller to support additional critical loads while islanding until back-up generation comes online. In addition, the BESS will provide a new revenue stream from the provision of Ancillary Services to the ISO-NE grid, providing a means for payback towards the upfront costs. This technology is applicable to virtually all DOD sites, but especially those within utility service territories where Ancillary Services markets exist. To date, active Ancillary Services markets exist throughout most of the country including, but not limited to, NY ISO, PJM, Midwest ISO, ERCOT, and the California ISO. The information obtained from this demonstration will enable a clearer understanding of the rules, operating protocols, and potential magnitude of revenues from participation in Ancillary Services markets elsewhere throughout the country.

It is difficult to predict return on investment at this stage because Ancillary Services payments are still being defined, but we would anticipate paybacks of less than 15 to 20 years. Ameresco has modeled the potential revenue from providing frequency regulation services to ISO-NE. Our modeling used a simulation program provided by ISO-NE specifically to test various operating scenarios and system capacities. This model showed that revenues from our proposed 500 kW / 580 kWh BESS could be on the order of $100,000 per year. If we expand our demonstration to utilize the on-site generation and increase the BESS capacity, we could increase the capacity of service offered to ISO-NE by at least a factor of ten to 5 MW of capacity and potentially capture revenues worth $1.0 million per year.

GE has been engaged in an ESTCP demonstration at the Marine Corps Air Ground Combat Center Twenty-Nine Palms, California. The objective of that project is to demonstrate advanced microgrid control technologies capable of improving energy efficiency, expanding use of renewables, and increasing energy security. The MCS being demonstrated at Twenty-Nine Palms, focuses on resource optimization (i.e. optimal dispatch) and is not demonstrating fast load shedding for energy security nor does it demonstrate the commercial value of participation in the Ancillary Services electric markets. We feel the PNS demonstration will build upon the lessons of Twenty-Nine Palms and allow the government to tap new funding resources to accelerate the pace of implementation of essential microgrid electrical infrastructure upgrades at mission-critical military facilities. Even if Twenty-Nine Palms were to participate in the Ancillary Services market in the future, the California and New England ISO markets and operating rules are very different. There is value in defining the protocols and cost-effectiveness of participating in Ancillary Services in two very different markets.

The DoD community has recognized that the aging infrastructure of the commercial power grid has resulted in frequent power outages. Portsmouth Naval Shipyard experiences 2 to 3 such outages each year. These outages have resulted in the tripping of the Shipyard generating plants with the resultant disruptions in Shipyard Operations. The successful demonstration of Fast Load Shedding at Portsmouth Naval Shipyard represents existing technology that can be deployed at any DoD facility where there is on-site generation with or without renewable energy.

If these energy supplies are not sufficient to support the full load of the facility, then Fast Load Shedding will allow the most critical resources to stay online and support the mission critical loads and the maximum amount of non-critical loads.

1.2 OBJECTIVE OF THE DEMONSTRATION

The technical objective of this project was to demonstrate that the emerging technologies of MCS and BESS can be integrated with the local grid electric supplier both to increase energy surety of on-site generation and to provide economic value to the ISO. The economic value to the utility provides a revenue stream that can help pay for the upfront costs. This demonstration project shows how the government can pay for energy surety upgrades with private capital instead of, and or in combination with, appropriated government funds. This should dramatically accelerate the pace of implementation of this essential electrical infrastructure upgrade at mission-critical military facilities.

The Portsmouth Naval Shipyard is an ideal demonstration site which offered extensive existing on-site generation and electrical infrastructure and within an ISO Regulation Market. These characteristics exist at most military bases making the results of this demonstration applicable throughout the DOD. The technical approach to this demonstration were executed in the following phases.

Technical Development and Acceptance: In this phase, we developed the design and operational characteristics of the proposed systems which were reviewed and accepted by the Government.

<u>Phase I – MCS/FLS</u>

- Design the new MCS/FLS components to integrate with the Shipyard's existing 13.2kV electrical distribution system and finalize the selection of loads and circuit breakers to be automated.

  (See Appendix E, a full set of As-built drawings can be provided upon request and clearance by NAVFAC-PWD ME)

- Design and complete the engineering and protection required to integrate the BESS into the MCS/FLS schema.

  (See Appendix H)

- Create test plans for factory and site acceptance as well as performance verification.

  (See Appendix B)

<u>Phase II – BESS</u>

- Design the new BESS components to integrate with the Shipyard's existing 480V Station Service Bus located at the Power Plant.

  (See Appendix G)

- Produce Arc Flash, Load Flow, Short Circuit, and Heat Gain studies.

  (See Appendix H)

Product Development and Factory Acceptance Testing: In this phase, the equipment manufacturers developed and tested the MCS/FLS and the BESS prior to shipping these systems to the site.

Installation, Start-up Testing, Commissioning, and Performance Verification Testing

Phase I – MCS/FLS

- The new equipment and systems were installed, and each subsystem commissioned in accordance with the Commissioning Plan protocols defined in detail in Appendix B.
- Conducted Performance Verification Testing. *(See Appendix B)*
- Monitoring, logging, and analysis of Live events over 12-month demonstration period. *(See Section 6.0)*

Phase II - BESS

- Defined the utility interconnection and communication protocols to qualify for participation in the Ancillary Services markets. *(See Appendix F)*
- Designed the control integration to the BESS to support the Ancillary Service requirements. *(See Appendix G)*
- Quantified the revenues available from ISO-NE for the level of Ancillary Services we can provide and define the operational requirements. *(See Section 7.0)*

  Ancillary Services rules were promulgated by FERC in October 2011; ISO-NE's compliance filing and acceptance process took place between June 2013 and September 2014. Specific schedules for minimum operating capacity (1MW), capacity payments, performance payments, and performance requirements were finalized and implemented by ISO-NE in April 2015. ISO-NE operated a pilot program with a minimum operating capacity of 100kW through March 2015, however we were unsuccessful in getting an Interconnection Agreement in place in time to participate. An IA and modification to the contract between the Navy and CMP was eventually fully executed in May of 2015.

  Ameresco is looking to the Energy Savings Performance Contract (ESPC) presently underway at PNS to potentially increase the BESS to over 1MW.

Operational Testing

Phase I – MCS/FLS

- Tested, evaluated, and documented the performance of the new equipment and systems over a 12 month period to capture performance under all Shipyard weather and operational conditions. We also studied the ability of the BESS to react to a loss of grid power.

- Energy and cost data was collected and the findings presented herein to encourage other sites to estimate potential benefits of a similar system.

Phase II – BESS

- Trial tested operation of the BESS on the ISO-NE Pilot Regulation signal
- Test, evaluate, and document the performance of the new equipment and systems over a 4 month period up to expiration of the ISO-NE Pilot program. The performance of the system will be evaluated based on the success of participation in the Ancillary Services market and the revenues generated.

  Note: 4 month operation period was not able to be performed due to expiration of the ISO-NE Pilot program

1.3 REGULATORY DRIVERS

FERC Order 755

The order is significant to energy storage participating in Regulation markets such as ISO-NE, NY ISO, PJM, ERCOT, and CAISO, offering higher revenue potential. The new rules require the recognition of speed and accuracy, two attributes of energy storage systems such as the BESS in this demonstration, and provide additional value in the form of higher payments to these assets. To date, ISO-NE and PJM are the only markets to come into compliance with the new rules with CAISO, ERCOT, and MISO in development.

FERC 18 CFR Part 35

The Federal Energy Regulatory Commission is proposing to amend its regulations under the Federal Power Act (FPA) to remove barriers to the participation of electric storage resources and distributed energy resource aggregations in the capacity, energy, and ancillary service markets operated by regional transmission organizations (RTO) and independent system operators (ISO). Specifically, they propose to require each RTO and ISO to revise its tariff to (1) establish a participation model consisting of market rules that, recognizing the physical and operational characteristics of electric storage resources, accommodates their participation in the organized wholesale electric markets and (2) define distributed energy resource aggregators as a type of market participant that can participate in the organized wholesale electric markets under the participation model that best accommodates the physical and operational characteristics of its distributed energy resource aggregation.

DoD Directive 4180.01

It is DoD policy to enhance military capability, improve energy security, and mitigate costs in its use and management of energy.

To these ends, DoD will:

a. Improve the energy performance of weapons systems, platforms, equipment, and products, and their modifications; installations, including both enduring and non-enduring locations; and military forces.

b. Diversify and expand energy supplies and sources, including renewable energy sources and alternative fuels.

c. Ensure that energy analyses are included in DoD requirements, acquisition, and planning, programming, budgeting, and execution (PPBE) processes. DoD 4180.01, April 16, 2014.

d. Assess and manage energy-related risks to operations, training, and testing, to include assets, supporting infrastructure, equipment, supplies, platforms, and personnel.

e. Develop and acquire technologies that meet DoD energy needs and manage risks; utilize appropriate resources and energy expertise in other governmental organizations and the private sector.

f. Educate and train personnel in valuing energy as a mission essential resource.

Page Intentionally Left Blank

2.0 TECHNOLOGY DESCRIPTION

2.1 TECHNOLOGY OVERVIEW

Ameresco installed and integrated the following new systems at Portsmouth Naval Shipyard:

- 500 kW / 580 kWh Battery Energy Storage System (BESS) to assure power quality on base during transitions from grid power to island power and to provide frequency regulation to the New England electric grid. System includes containerized battery, inverter, site controller, and communications hardware required to communicate with ISO-NE.
- Microgrid Control System (MCS) to implement a Fast Load Shed solution.
- The MCS Control system includes new metering in feeder controllers (nineteen breakers at the Power Plant, thirteen breakers at Substation 3 and the two Utility tie breakers (F1 & F12) at Franklin Substation). This metering data is used by the MCS to adaptively calculate the steady-state generation-load balance for changing power system conditions and select the prioritized loads to shed in order to maintain this balance following the detection of the loss of the Utility. This action will prevent the operating turbine generators from tripping on an overload. The feeder controllers provide relay trip control of twenty-nine (29) existing breakers (thirteen at the Power Plant, thirteen at Substation 3 and three at Franklin Substation).
- Dedicated fiber-optic communication system to allow monitoring of key components (e.g. switches, status of battery banks) at the central controller.
- GPS Time synchronization of the MCS components.

Phase I – MCS/FLS

Implemented a GE C90 and F35s to provide fast load shedding for a Loss of Utility event (PNS islanded) and BESS control during Microgrid Dispatch. The C90 and F35 devices are at commercial stage and have been used in similar systems at industrial facilities, and provide the flexibility and programmability to implement the key objectives of this demonstration. A high-level system architecture for the MCS is shown below in Figure 2-1. Please see Appendix E for full size document.

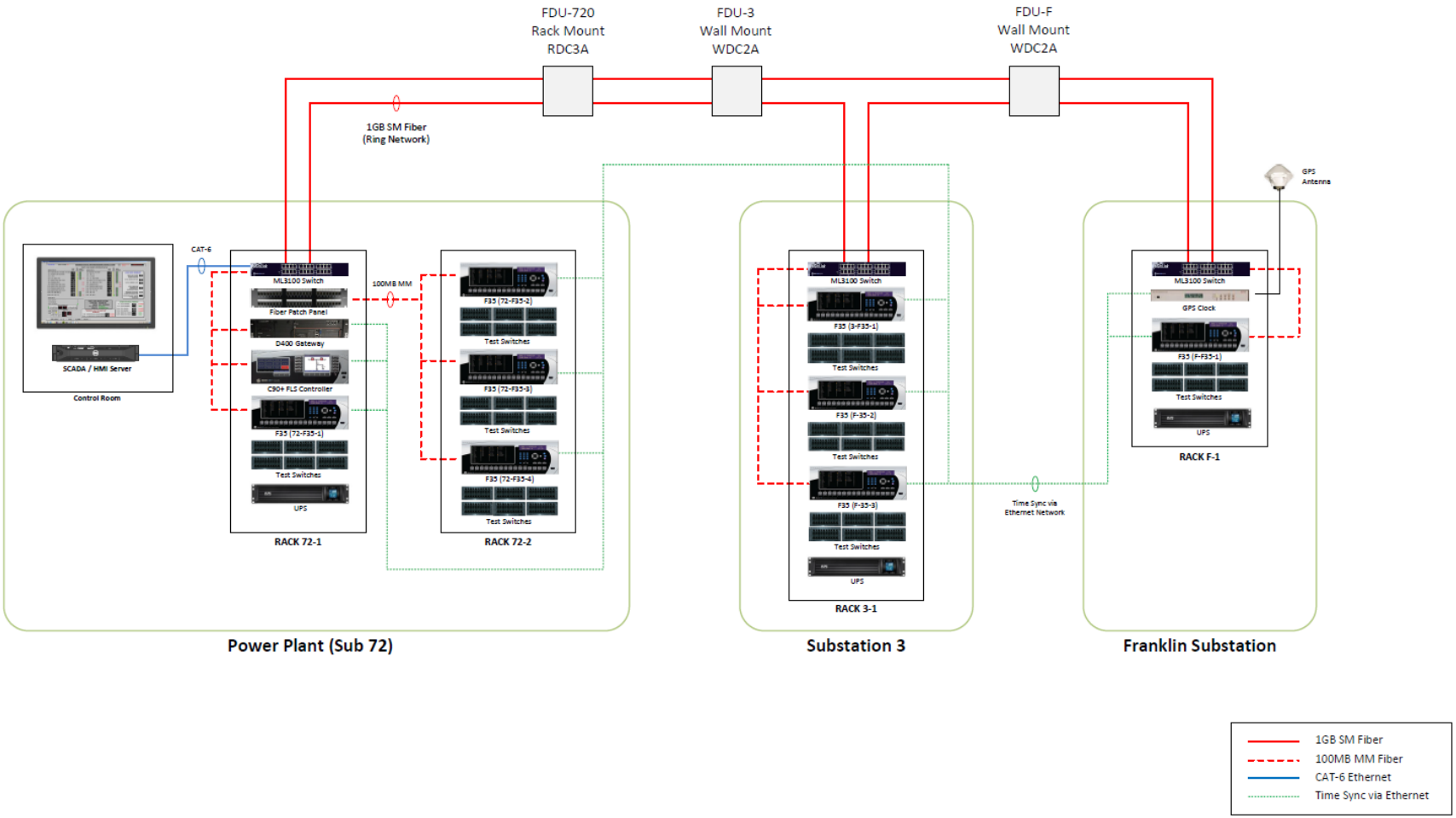

Figure 2-1 MCS System Architecture

The Demonstration MCS system is based on three repeatable building blocks that can be scaled to cover the entire Portsmouth Naval Shipyard or applied at other DOD facilities:

Major Components

Main Substation Controller Subsystem – The main substation controller subsystem is the master control required to coordinate fast load shedding, dispatch of BESS during islanding, and historical data archiving of events. The Main Substation Controller Subsystem consists of a D400 substation gateway for the communication interface with the BESS Site Controller for data acquisition for all conditions. The D400 also controls Microgrid dispatch of the BESS following loss of the utility and monitors the BESS performance under Microgrid dispatch. The Fast Load Shed (FLS) control is performed by the GE Multilin C90Plus Fast Load Shed Controller. A local Windows based server provides configuration services for the system's devices. The server is equipped with GE's Cimplicity SCADA software to provide the operator with visual displays of system conditions, alarms and control as well as data acquisition and storage.

The following system functions are completed by the Main Substation Controller subsystem:

- Operator monitoring and configuration of the FLS system
- System alarm and event management
- Real time monitoring of system power values
- Configuration of the priority of the loads to be shed
- Detection of the Loss of Utility (LoU) event and initiating the FLS based on maintaining a balance of power and load. The FLS determines the loads to be shed based upon a pre-configured priority established by PNS operations personnel
- Sequence of events recorder to record the operation of the system and store key data to analyze the operation of the system.
- Communication control between the C90Plus and F35 field controllers and the BESS Site Controller and Operator monitoring and control of the FLS.
- Automatic retrieval and storage of waveforms and event logs from all devices by HMI Server

Feeder Controllers – Three Feeder Control Cabinets are provided to interface the Main Substation Controllers to the 13.2kV circuit breakers located in the Power Plant, Substation #3, and Franklin Substation. The feeder controller is based on the GE Multilin F35 Feeder protection system and these units are responsible for:

- Interfacing the 13.2kV circuit breaker into the Demo Microgrid Control System
- Monitoring the open/close status of each breaker
- Monitoring the volts, amps, kW for each monitored 13.2kV critical circuit breaker and the incoming utility service.
- Communicating power and status back to the Main Substation Controller Subsystem and receiving the trip command from the C90Plus FLS Controller.
- Providing a Fast Load Shed trip signal to the 13.2kV circuit breakers

- Local storage of oscillography information and event recorder used to evaluate the operation of the system.

Note: It is the operator's responsibility to manually close all tripped breakers (normal operation, after event). In the Demonstration project, the system is not wired to remotely close a circuit breaker.

Ethernet Communications – A one Gigabit per second fiber optic Ethernet ring communications network has been installed with a GE ML3K managed Ethernet switch located at each site; Power Plant, Substation #3, and Franklin Substation. The ring design provides for high reliability and a secure communications architecture. The ML3K switches are equipped with a SMART RSTP feature that allows for recovery from faults in ring network architectures in less than 5 milliseconds per switch in the network – 10 times faster than generally available in standard Ethernet switches. The switch provides for 10/100 Megabits per second communications to each connected device.

The Fast Load Shedding scheme employs IEC 61850 GOOSE messaging to provide high speed communications between the GE C90Plus and the F35 Feeder Controllers. Modbus TCP/IP protocol is used to access data from the GE Devices and the DynaPower PCS by the D400 and the HMI-SCADA.

GPS Clock Time Synchronization – The system employs an Arbiter Systems 1084B GPS Satellite-Controlled Clock with the Network Time Protocol/Precision Time Protocol Server option. This allows the GPS Clock to act as time server over the Ethernet network using Network Time Protocol (NTP) and Precision Time Protocol (PTP). Typical accuracy for NTP is one millisecond on a LAN. The PTP Server, GE C90Plus and F35 Feeder Controllers support the IEEE 1588-2008 protocol assuring high accuracy time stamping all data and waveforms. PTP accuracy is better than 1 microsecond.

GE Microgrid Fast Load Shed Operation - The MCS continually monitors the PNS incoming utility breakers located in Franklin Substation for an islanded condition. An island condition is detected by a new F35 relay based upon tripping of the utility tie breakers by the existing utility under/over-voltage and under/over-frequency protective relays. In addition to these signals, overheat conditions from Turbine Generators may also be used to trigger load shed operation, but is not programmed for the demonstration. When an island condition is detected, appropriate IEC 61850 Generic Object Oriented Substation Events (GOOSE) messages are sent to the MCS. When the PNS power system is islanded from the local utility the MCS will complete the following actions as seen below in Table 2-1 (the priority of load shedding "candidates" is pre-configured):

Table 2-1 Operational Steps to Island

Step #	Step Description	Notes
1	Loss of utility; F1 and F12 at Franklin Substation trip and/or under-frequency detected at Power Plant (PP)	
2	Main substation controller sends trip messages to feeder controllers	Using IEC 61850 GOOSE messaging
3a	PP substation breakers 8, 9, 17 and 18 tripped by fast load shedding logic in main substation controller	Separates PP from Franklin Substation and Substation 2
3b	Feeder controllers trip Substation 3 breakers 7 & 13	Separates Substation 3 from Franklin Substation
3c	Power Plant feeder controllers trip appropriate load feeders to balance available generation	Depending on the output of the GTGs, station power requirements, and loads current being served
3d	Substation 3 feeder controllers trip appropriate load feeders to balance available generation	Same as 3c
3e	Franklin Substation feeder controller trips breakers 5, 9 and 10	Prevent back feeds through load centers
4	BESS Site Controller turns control of BESS over to D400 to charge or discharge real power to help balance available generation and support loads.	C90Plus initiates Mode change in BESS Site Controller.
5	Emergency generator controls bring further generating units on-line and BESS adjusts output.	Diesel Generators are automatically started and synchronized by DCS
6	NAVFAC personnel close breakers to pick-up additional critical loads.	

To complete steps 3c, 3d, and 3e above, the MCS has up to 30 pre-defined load shedding tiers with corresponding priorities. The total power shed will be calculated from the instantaneous power loads recorded by GOOSE messages from the UR F35 relays just before the islanding event. The C90Plus Controller will shed the loads according to priority, until the total load shed is equal or greater than the P_{Shed}, that is,

$$\sum_{i=1}^{N} Load_i \geq P_{Shed}$$

Equation 1 Calculation of Number of Load to Shed

$Load_i$ is the measured real kW value of each load in the Load Shed Tier Table.
P_{Shed} is the load shed order and is based on the present on-line generator resources.

The shed requests are sent from the C90Plus Controller to the F35s, installed in the load substations, in the form of GOOSE messages. Upon reception of the GOOSE messages, the F35s which are requested to shed load will trip their load breakers. The FLS only operates once and must be reset manually.

Phase II - BESS

- Installation of 500 kW / 580 kWh BESS of Lithium Ion chemistry.
- Worked through the control and communication protocols needed to satisfy the rigorous requirements of ISO-NE for participation in their ancillary services markets.

- Operated BESS in trial run on ISO-NE signal to confirm operability.

(The following tasks were not performed due to expiration of the ISO-NE Pilot program)

- Demonstrate the effectiveness of BESS in meeting ISO-NE's needs by documenting how often and to what extent the BESS resource is dispatched by ISO-NE.
- Determine the effective available capacity of a BESS given the variable requirements of the ISO that will alternately call for the charging or discharging of the system.
- Quantify the value of the ancillary services provided so that metrics on the cost-effectiveness of this resource can be established.

Major Components – See Figure 2-2

Battery – The battery is a Saft Intensium Max 20 consisting of 10 racks of Lithium Ion modules, each with a dedicated Battery Management System (BMS), and housed in a shipping container with integrated HVAC and Fire Suppression System. The container has a Central Control System which communicates via Modbus to the BESS Site Controller. System energy capacity 580kWh.

Inverter (PCS) – Manufactured by Dynapower, this unit is capable of both charge and discharge of the battery at 500kW of power with a response rate of up to 32,000kW/s (~500kW/16ms). The unit meets IEEE 1547 standards for interconnected distributed generation resources.

Site Controller – Manufactured by Dynapower, the Site Controller is the central controller for the BESS and its interface for the ISO-NE hardware and GE MCS.

RTU – The RTU is responsible for communicating Market Data and Reliability Data between the ISO NE Front end systems and the PCS Site Controller. The system will use Modbus over the ISO-NE dedicated Multiprotocol Label Switching (MPLS) network for communication back to ISO-NE.

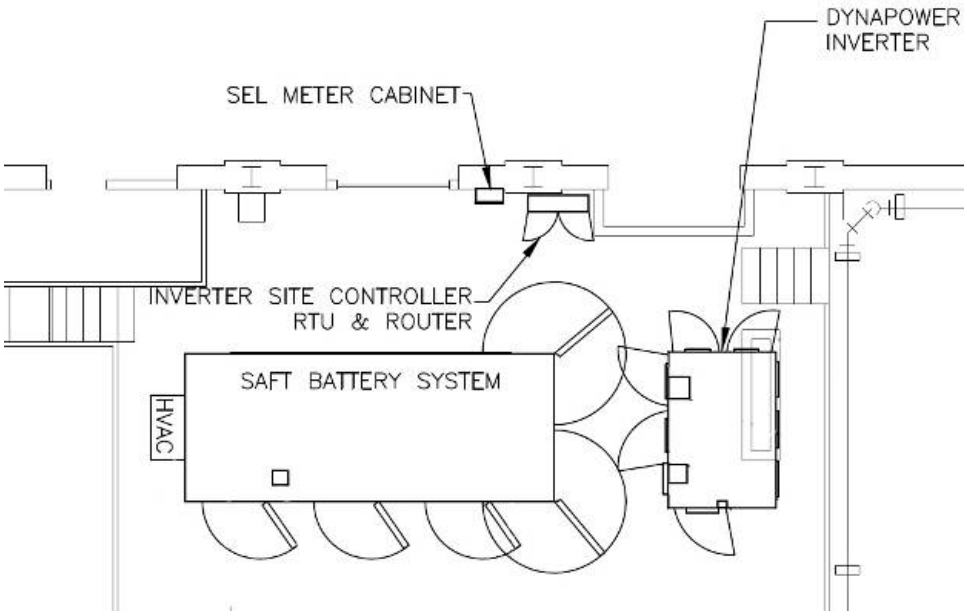

Figure 2-2 BESS Major Components

BESS Operating Modes

The Site Controller has three pre-defined operating modes programmed within the Site Controller. These modes can be selected through the HMI on the front of the BESS Site Controller cabinet. See drawing E-29 in Appendix G for Control Block Diagram explaining parameters for each mode of operation.

1. **Remote Dispatch** - The BESS Site Controller provides the ability to instruct the inverter to charge or discharge the battery when requested through the ISO-NE interface and thus provide regulation up or down translated as a change in demand at the facility's utility meter. The goal of this use case is to use the BESS for providing ancillary services to ISO-NE and participate in the non-generating resource regulation pilot program. New market rules to meet FERC Order 755 are in development, when the final rules are accepted the pilot will end and the BESS will be available to participate as an Alternative Technology Regulation Resource (ATRR) in the ISO-NE Regulation market.
2. **Automatic Voltage Regulation (AVR) –** In this use case the Site Controller will command the inverter to inject and absorb reactive power as a function of the voltage. The controller will be closed-loop and derive the set point from a predefined algorithm that comprises a dead-band and PI control up to the limit of the inverter and IEEE 1547 protection.

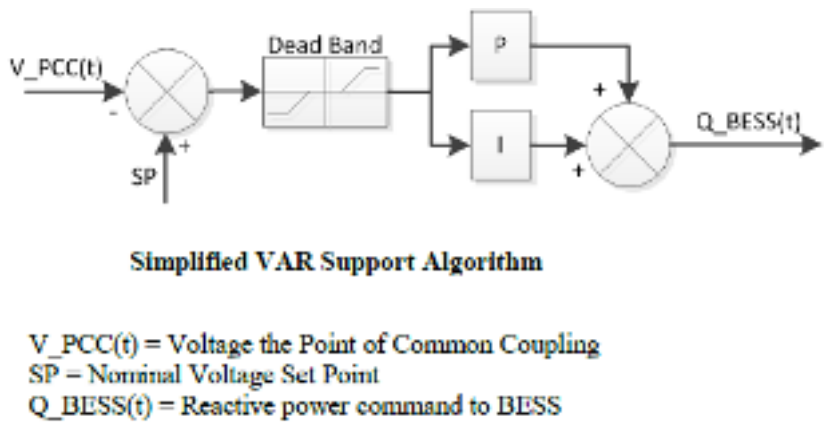

Figure 2-3 VAR Support Diagram

3. **Microgrid Dispatch** - The system will transition to Microgrid Dispatch mode from the Remote Dispatch mode in the event the main feed from the local utility is lost and the interconnection breaker opens initiating a transition to island mode. A 'grid down' relay located on GE's C90Plus indicates that the site is islanded. When in Microgrid dispatch mode, the BESS site controller will receive its active power (P), and control command and ramp rate setpoints from the GE D400 controller. The BESS will maintain constant output until the Diesel Generator(s) are synchronized on line and ready to carry the load that the BESS has been supporting. The D400 will then initiate a ramp down of the BESS and the BESS Site Controller will return to the previous operating Mode.

2.2 TECHNOLOGY DEVELOPMENT

Phase I – MCS/FLS

Preceding Development - GE's MCS has been under development for the past 10 years through various government partnerships with the US Department of Energy, DOD, and Canadian Government. Over the past three years, GE has transitioned a large part of the technology from GE's Global Research Center to GE's Digital Energy business as part of GE's technology transfer process. The core control platform has been transitioned to commercial purposes; however applications in integrating Battery Energy Storage Systems with MCS/FLS technology can benefit from further development as is demonstrated in this project.

Anticipated Development Benefits to DoD - The development and demonstration of algorithms and controls schemes that enable utility interaction with a DoD microgrid is an essential next step in achieving an economically viable energy surety microgrid, in that it allows for utility derived revenue streams that can pay for the premium of energy surety.

Site Specific Implementation - The primary goal of this Demonstration Project was to keep the Power Plant online during a Loss of Utility. Since the available generation at the Power Plant was greater than the loads served by the Power Plant, Feeder Controllers were also installed at Substation 3. The net result for this Demonstration was that the Power Plant and Substation 3 would operate as its own island, while Franklin Substation and Substation 2 and the loads they serve, would go dark. This separation was accomplished by opening the two loop feeders that tie the Power Plant to Franklin, the two loop feeders that tie the Power Plant to Substation 2 and the two loop feeders that tie Substation 3 to Franklin. This action results in the generation at the Power Plant being reserved to serve the remaining loads at the Power Plant and Substation 3.

See Appendix E for the basic architecture of the systems. A full set of As-Builts were developed to perform installation of the system at the Power Plant, Substation 3, and Franklin Station. The detailed As-Built drawing package is not included with this report due to reasons of facility security, however it can be provided on disk upon request and approval by NAVFAC PWD-ME.

Results Post Demonstration - The installation and commissioning of the MCS Fast Load Shed was completed in November of 2015. Ameresco and GE worked with NAVFAC PWD at PNS to gain approval to alter operation of the generation resources while conducting the Simulated Tests of the FLS so as to set up each of the desired scenarios. This eliminated the need to create an artificial means of testing the FLS using multiple test sets; real power measurements would be used in the FLS calculation. The initiation of the FLS is caused by the opening of the two utility tie breakers, F1 and F12, at Franklin Substation. Though generation was to be physically operated for the Simulated Tests it did not require the opening of F1 or F12 breakers or any of the load distribution breakers. The 'b' switch closing was simulated by applying a jumper to the Franklin Feeder Controller, F-F35-1. The first Simulated Testing revealed an issue with how the Infeeds for were being taken into account in the C90Plus settings. A thorough review of the FLS settings was conducted by GE and the GOOSE Messaging and C90Plus settings were updated to assure proper performance of the FLS. The Simulated Testing was repeated on December 3, 2015.

Two system Scenarios were tested:

1) Summer operation with one GTG (5MW) serving approximately 10 MW of PNS load.

2) Winter Operation with two GTGs (~10MW) serving the same load. These tests succesfully demonstrated that the FLS could perform as designed and that the Power Plant should be able to stay on line.

It was agreed by all parties, including NAVFAC and the base Command, that the only true means of verifying the MCS/FLS performance was to conduct Live Testing. The Live Tests were conducted on December 8, 2015. The proper performance of the MCS/FLS was successfully demonstrated. The Power Plant remained online and the <50 ms speed of the FLS operation was far better than the original expectation of 140ms. In fact, the overall trip time was ~80ms when one includes a 32ms auxiliary relay delay at Franklin. This auxiliary relay was needed to replicate the action of the F1 breaker 'b' contacts as there were no spares available. Table 1 in Section 3.0 provides a Summary of the Live Test Results and how the Performance Objectives for the MCS/FLS were meet or exceeded. The detailed presentation of the PVT Simulated Tests and PVT Live Tests are presented in Section 6.0

Transfer of Technology - In terms of follow-on implementation, the design and demonstration of the microgrid system and BESS was developed such that it can be deployed to other installations in a replicable, modular, and scalable fashion. The features that have been developed and demonstrated will have application with other utilities and in a manner that is familiar to the government's standards of operation. The PNS personnel are very satisfied with the performance of the MCS and are planning to expand the technology to encompass Substation 2 and Franklin Substation under an Energy Savings Performance Contract presently in development. This expansion will simplify the FLS settings as the loops that tie the substations will no longer need to be monitored and tripped thus reducing the duty on six 13.2kV circuit breakers. And by defining the financial value and payback associated with providing Ancillary Services, this demonstration will accelerate the transition of this innovative technology to more widespread use.

With the experienced gained out of this demonstration a white paper has been written and submitted for publishing with IEEE titled "Experience with Fast Load Shedding using IEC 61850 GOOSE". See Appendix L for a copy of this paper.

Phase II - BESS

Preceding Development

For this demonstration, we selected Saft, a manufacturer who has been developing battery technology for nearly a century. Saft offers several grid-tied solutions ranging from 100kW to multiple megawatts in electrical capacity. Their deployment experience is broad having manufacturing facilities located in both Europe and the United States with a new facility built in Jacksonville, Florida where the unit for this demonstration was built.

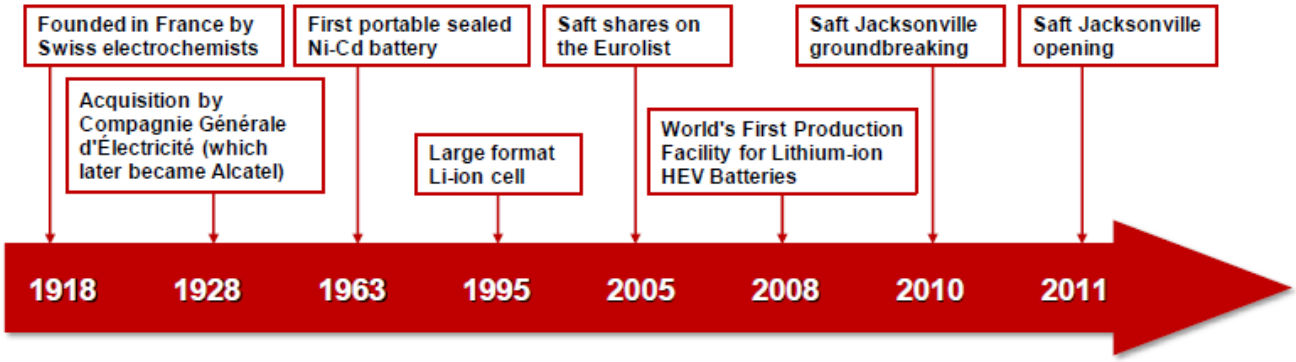

Figure 2-4 Saft Company Timeline

Deploying energy storage systems on the electrical grid has also increased over the past decade and it is in the interest of this demonstration to extend that experience to the Department of Defense. The following graph shows the megawatts of electrical capacity installed in the U.S. dating back to 2012 with an upward projection out to 2019. Though integration of energy storage with the electrical grid is still a relatively nascent market, we find energy storage is maturing at a rapid pace with a high demand and broad support by local, state, and federal sectors.

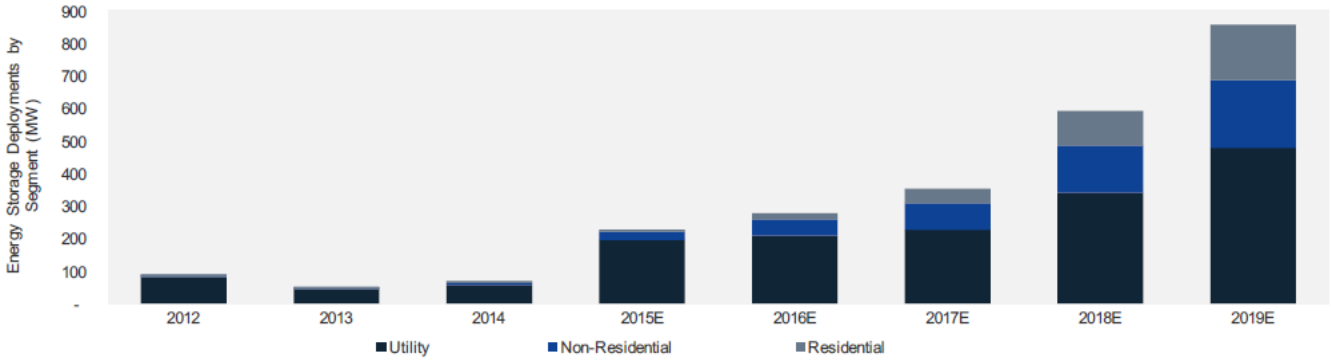

Figure 2-5 Installed U.S. Capacity Energy Storage Systems

Copyright 2015 Energy Storage Association, U.S. Energy Storage Monitor

Anticipated Development Benefits to DoD and Site Specific Implementation

The DoD has a clear initiative to always be improving reliability and security of the utilities which directly support the daily activities of the mission. A reliable supply of electricity to the facility is possibly the most critical utility required to maintain operability of a site in both normal operating conditions and times of emergency. Integrating energy storage into this demonstration will prove two primary benefits.

Emergency Backup Capacity (Phase I) – The BESS will demonstrate its ability to serve as a generator for emergency backup which can transition from stand-by to dispatch in a matter of milliseconds. Two modes of operation were tested during this demonstration.

The first being for the BESS to serve as a "buffer" where the 500kW of capacity is dispatched in sequence with the FLS but *not* accounted for in the load shed priority calculation to support additional critical loads during an islanding event. In this mode the unit provides some additional capacity to absorb any near-term change in the load conditions between the FLS making its calculation and tripping breakers and until the Gas Turbine Generators and/or Emergency Diesel Generators stabilize from the islanding event.

In the second mode of operation the BESS is demonstrated to operate as a "bridge" until additional emergency generation served by the diesels comes online. In this mode, the FLS calculation includes the capacity of the BESS to support additional critical loads. Where the BESS can operate in milliseconds a traditional emergency diesel generator in stand-by will take around 60 second to start and synchronize to the grid.

Ancillary Services (Phase II) - While the BESS is primarily integrated with the interest of supporting the transition to islanding during an emergency event. We can also demonstrate the benefits of the BESS being utilized during normal operating conditions by participating in ancillary services available in the electricity market. By participating in these markets we can generate revenue which can go towards reducing energy bills for the facility and paying for the upfront and operating costs of the BESS.

Portsmouth Naval Shipyard is served by Central Maine Power as the owner of the transmission and distribution system and ISO New England as the regional system operator which manages the greater electrical grid as well as administers electricity markets. ISO-NE developed a pilot program to demonstrate the utilization of fast responding resources, such as batteries, to provide frequency regulation to the greater grid.

Results Post Demonstration

Emergency Backup Capacity (Phase I) – Operation of the BESS during a loss of utility in sequence with the FLS was demonstrated in Phase I. A summary of performance was addressed in the previous section and can be found in "Table 1. Summary of Live Test Results"

Ancillary Services (Phase II) – In order to participate in the ISO-NE Pilot program a line of communication had to be set up between the BESS located at Portsmouth Naval Shipyard and ISO-NE's central control center in Holyoke, MA. The telemetry was installed and programmed per ISO-NE's Operating Procedures manual "OP 18 – Appendix F", which can be found on their website.

The following diagram in Figure 2-6 is taken from that manual which depicts the communications architecture tested. Sheets E-03 and E-04 in Appendix G show the communications as installed and tested for this demonstration. Testing of the telemetry and dispatch of the BESS took place over a one hour period where ISO-NE supported via phone and operation of the BESS following the ISO-NE Automatic Generator Control (AGC) signal was performed. The system proved to operate as designed and followed the signal. Due to the lack of an Interconnection Agreement at that time, the system was not approved to participate in the Pilot. ISO-NE did agree to allow the system to operate temporarily to prove connection of the system was a success and is able to technically follow the AGC signal.

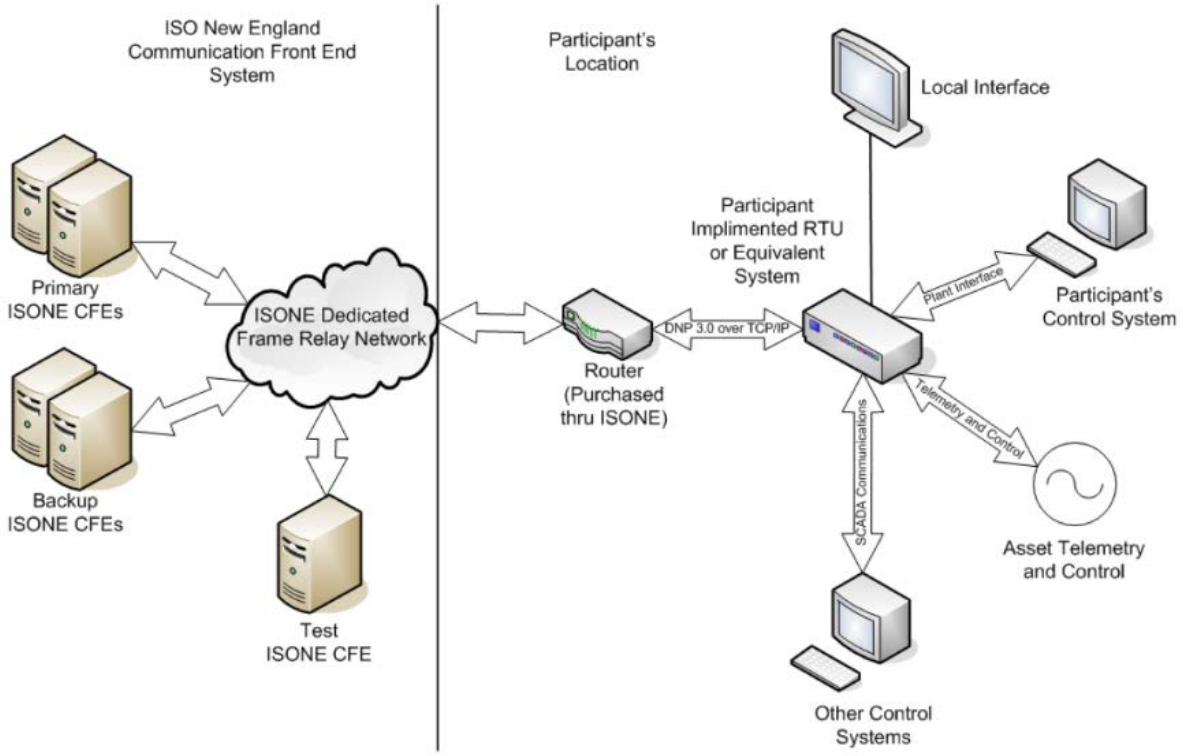

Figure 2-6 ISO-NE Communications Architecture

2.3 ADVANTAGES AND LIMITATIONS OF THE TECHNOLOGY

Phase I – MCS/FLS

The technology applied at Portsmouth is flexible in its application and the F35 feeder controllers provide for a very cost effective retrofit solution. The C90Plus controller is unique in that it uses hardware that has been designed to be used in utility and industrial environments and is the first controller of its' type to use IEC61850 GOOSE messaging to provide high speed, secure communications. The solution is expandable and using C90Plus Aggregators can load shed up to 2,500 loads.

The F35 controller also offers feeder protection capabilities that can replace ageing electromechanical and solid state relays that are reaching their end of life. This capability was not implemented, but is under active consideration by PNS. This can further reduce the cost of implementing the MCS Fast Load Shed while providing the facility with additional insight into power system disturbances and faults through the event logging and waveform capture capabilities inherent in these devices.

Clearly, this technology can provide the U.S. Navy, as well as other DoD facilities, with greater energy surety for their shore operations.

Over the twelve month demonstration period PNS experienced three live events where electrical service from the local utility (Central Maine Power) failed. In two out of three of these live events the Gas Turbine Generators tripped off-line resulting in a facility-wide blackout.

During Performance Verification Testing (PVT) it was demonstrated that the system functions as designed (See Section 6), resulting in a successful operation of the FLS and transition of the Gas Turbine Generator (GTG) units to island mode. However during a live scenario, it has been determined that the utility tie-breaker protection relays are not sufficiently fast enough in detecting the fault and in turn opening in time to protect the plant. Working with the local NAVFAC PWD engineers it has been decided that there is need to install a Remote Transfer Trip between the utility tie-breaker at PNS back to the public utility's recloser located at their 34.5kV substation approximately 3 miles away. See Section 8.0 for further detail.

Phase II - BESS

The storage of energy has been in development and in implementation for well over a century. One of the fastest growing and advancing technologies is solid based chemistry batteries. There are numerous companies within this sector who have decades of proven manufacturing experience and success in producing standardized cells. Within the past 20 years the battery industry has made great strides in increasing both energy density and life cycles while also providing higher rates of charge/discharge, predominately made possible by the advancement of lithium ion chemistry.

The following chart depicts the many forms of energy storage available on the market today showing the operating characteristics and preferred applications for each.

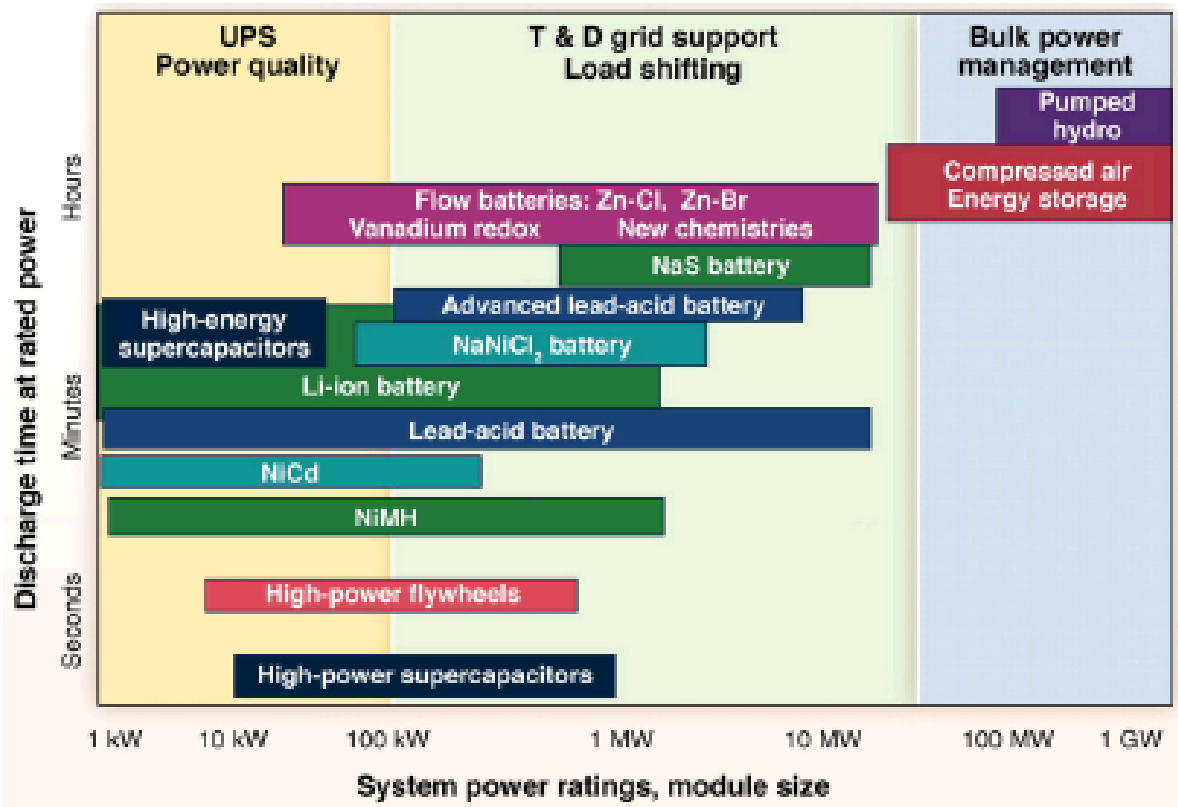

Figure 2-7 Energy Storage Technology Range of Application

Utility Scale Energy Storage Systems: Benefits, Applications and Technologies, State Utility Forecasting Group, Purdue University, June 2013

We selected lithium ion for this demonstration keeping in mind the application at hand which is to provide interim emergency back-up power during an islanding event (Phase I) and participate in the ancillary services market, specifically the ISO-NE Pilot program running on frequency regulation (Phase II), both of which require dispatch in sub-hour time frames.

Regarding alternative technologies, we researched and considered Advanced lead-acid and NaS chemistries, both of which may have been capable of meeting the operating profiles we desired for our application and coming in within budget. However, both companies we sourced pricing from during the time of development subsequently experienced either critical cell level failures or changes in design which ultimately resulted in discontinuation of those products or even bankruptcy of the manufacturer. Other manufacturers of these chemistries exist and are worth watching for future development however we have seen steady and dramatic decreases in the cost of lithium ion based systems specifically just over the three years since the kick-off of this demonstration and expect this trend to continue. Flow batteries may also be another promising chemistry to consider in future projects, with this technology maturing and coming down in cost. Though, it must be noted that the optimum operating profile for this chemistry is multiples of hours at a low rate of discharge relative to its storage capacity, which does not meet the needs of the applications in this demonstration.

3.0 PERFORMANCE OBJECTIVES

Phase I - MCS/FLS System

The primary metric for a successful deployment of the Fast Load Shed (FLS) system is based upon keeping the Power Plant online through transition to Island mode following a Loss-of Utility (LoU) event. A secondary metric of success is the ability of the Islanded system to maintain electric service to mission critical loads at the Shipyard. The HMI affords the Operator the ability to prioritize the tripping/non-tripping of the Shipyard loads at the Power Plant and Substation 3. This gives the Operator the flexibility to adjust the FLS to match the day-to-day Shipyard operations schedule. The demonstration will monitor and measure Proficiency of the MCS to Match Load to Capacity (MW), Success of MCS to Fast Load Shed (FLS) (measured in speed of response in milliseconds), and BESS Participation in Transition to Island Mode (Enabled/not enabled in FLS calculation – measured load maintained/shed).

The system's effectiveness in eliminating Power Plant outages will determine how much downtime was avoided in a given year from loss of public utility outages. Additional savings related to Annual Avoided Cost in lost productivity ($) will be estimated. This measurement can be used to justify the upfront costs to implement the Fast Load Shed system at a given facility, based on the value of the services that facility provides. A facility's operational requirements (energy surety of critical loads vs. use of reserve margin to serve non-critical loads) will ultimately determine this value. For example, the FLS allows for the inclusion of a reserve margin for a generator that is on-line. If this margin is set to zero, then more load will be shed to maintain energy surety. This setting is user selectable. A consideration in establishing this margin is the response time of the generators to pick-up additional steady state load. This requires stability studies to be performed to establish whether the generator control response is fast enough to support the steady state load requirements of the island.

Table 3-1 Performance Objectives
Phase I – MCS/FLS

Performance Objective	Metric	Data Requirements	Success Criteria
Quantitative Performance Objectives			
Energy Security	Power Plant Non-Trip for Loss of Utility event	Document Power Plant Trip/Non-Trip for Loss of Utility	The Shipyard successfully islanded without Power Plant trip for each Loss of Utility event tested during the two (2) PVT Simulated Tests and the two (2) Live Tests.
Proficiency of MCS to Maintain Generation – Load Balance for Loss of Utility	Power Values (MW)	Pre-/Post- Loss of Utility Power measurements for all monitored breakers, breakers tripped, generating units on-line, and FLS settings established by Shipyard	The MCS trips sufficient load to maintain steady state Generation – Load Balance for Loss of Utility. The summer configuration (1 GTG) was tested and the FLS correctly tripped a total of 1,161kW of load at the Power Plant and Substation 3. See C90Plus Event Log and HMI Screen Shot. The winter configuration (2 GTGs online) was tested and no additional load was required to be tripped at the Power Plant or Substation 3 as the online generation was sufficient to support the connected load. See C90Plus Event Log and HMI Screen Shot.
Demonstration of Fast Load Shedding	Time (ms)	Document time to trip from detection of loss of Utility	Trip command < 3.0ms, overall trip time <2.1 + breaker trip time <50ms. (Power Plant and Substation 3 were islanded and all loop and load breakers were tripped in less than 50ms. See the Wavforms for each Test. The total trip time, including the delay caused by an auxiliary relay at Franklin, was less than 80ms.
Annual Avoided Cost of Lost Production	Number of events per year, value of lost Shipyard production per event	History of lost production costs for Loss of Utility events	The simple payback of the system is greater than or equal to the useful life of the FLS system.
BESS Participation in Transition to Island Mode	Power (MW) and time (ms) of response, and additional load maintained	MCS control actions, BESS status, response time, BESS kW	The MCS successfully dispatched the BESS following Loss of Utility during the Simulated Tests, acting as a "Buffer". The BESS was bypassed during the Live Tests. Follow-up testing was performed to demonstrate the BESS operating as a "Bridge", though the BESS dispatched the FLS program failed to take the additional capacity of the BESS into consideration with the load shed priority calculations. GE identified the error in calculation and formulated a corrective action to alter the programming to resolve the issue. Due to time constraints and logistical challenges of receiving approval to perform follow-up testing the re-programming has not been performed to date but is planned to be implemented during the next phase of build out in the upcoming ESPC.

Table 3-1 Performance Objectives
Phase I – MCS/FLS (Continued)

Performance Objective	Metric	Data Requirements	Success Criteria
Qualitative Performance Objectives			
Ease of Use	Operator Success in Learning the System	Interview PNS Personnel	NAVFAC personnel have gone through training and were responsible for operation/monitoring of the system over the 12 month demonstration period.
Operational value of MCS/FLS	Degree of Satisfaction	Interview PNS Personnel	Overall the operators have come to value the capabilities of the MCS/FLS; in particular, the additional generator/load data provided by the HMI in the control room. Though PVT proved operability of the FLS, live events over the demonstration period proved that additional components on the utility tie-breakers are needed to successfully island consistently. Only one out of four live events resulted in a successful transition to island mode.
Transferability of MCS-FLS application to other DoD sites	Review of Solicitations and Projects Underway	Industry Awards and Projects out for Solicitation	Ameresco is presently in development of three Energy Savings Performance Contracts which include MCS/FLS and BESS technology, including another phase at PNS. Increasingly, ESPC solicitations are coming out with microgrid technologies specified.

- Name and Definition: **Energy Security**, is a measurement of whether the Gas Turbine Generator(s) (GTGs) remain on-line and continues to supply power to the Power Plant following a Utility Trip.
- Purpose: Historically, the Shipyard experiences 1 to 3 unplanned utility trips per year that result in the GTG(s) tripping due to a power imbalance, e.g. load is greater than available GTG MW output. The result is Shipyard Operations has to restart the GTG(s) and then manually add load.
- Metric: The Non-trip/Trip of GTG(s) for a Loss of Utility event
- Data: Operator log of result: Non-trip or Trip.
- Analytical Methodology: GPS time-synchronized data, events and waveforms will be collected from the D400, PCS, and F35 relays and analyzed to provide a complete understanding of the Loss-of-Utility event.
- Success Criteria: The Shipyard is successfully islanded without the GTG(s) tripping.

- Name and Definition: **Proficiency of MCS to Maintain Generation – Load Balance** for Loss of Utility is determined by comparing the amount of actual load shed (breakers tripped) by the FLS with a calculation of the pre-event load values.

- Purpose: The proficiency of the FLS can be evaluated by verifying that the minimum amount of lower priority load has been shed to maintain generation and load balance.
- Metric: Measurement (MW) of generation, loads and Utility power values pre-event and post event.
- Data: Power measurements for all monitored breakers and log of Breakers Tripped for Pre-/Post- Loss of Utility event. Pre-event and post-event details for number of generating units on-line and power values.
- Analytical Methodology: The power values for key breakers at the Power Plant and Substation 3 are being monitored continuously by the F35 feeder controllers. Not all breakers are being monitored. The initial goal of this Demonstration was to maintain the operation of the Power Plant following the loss of the Utility. During the evaluation of the Shipyard load data it was recognized that the Power Plant had sufficient generation to allow mission critical loads at Substation 3 to be maintained by tripping of non-essential loads at Substations 3 and the Power Plant.
- For purposes of this Demonstration, the Shipyard can be considered to be composed of two systems: The Primary System consists of the Power Plant and Substation 3. The Power Plant has two ties to Substation 3 and the power flow to Substation 3 from the Power Plant is monitored. The Secondary System consists of Substation 2 and Franklin Substation. Franklin has two ties to the Utility. The power flow from the Utility to the Shipyard is measured and recorded to document the amount of Utility power flow that is lost. The Power Plant has two ties to Franklin and two ties to Substation 2 and Substation 3 has two ties to Franklin. The power flow across these ties is measured and the net sum of these ties represents additional power available to the Primary System for balancing. The data recording system will allow for detailed analysis of the LoU event while taking into account all key power flows.
- Success Criteria: Analysis of data shows that the minimum amount of load has been tripped based upon the priority settings in the C90Plus and that the generating units continue to supply power to the remaining loads.

- Name and Definition: **Demonstration of Fast Load Shedding** is effected by initiation of tripping of selected breakers within 20 ms of detection of a LoU event at Franklin Substation. Overall trip time for selected breakers is less than 20 ms plus normal breaker trip time (3 to 5 cycles).
- Purpose: The FLS of the selected breakers will allow the Shipyard generation to maintain stability and the remaining load will match the output of the generation with a margin as specified by NAVFAC.
- Metric: The GPS time synchronization will allow for millisecond (ms) time calculations of operations.
- Data: Time synchronization of the F35s allows for accurate time (1ms) calculations.
- Analytical Methodology: The FLS and Shipyard operating times will be determined from the time stamped event logs and waveforms captured by the F35 Feeder Controllers.

- Success Criteria: Fast load shedding is initiated within 15ms to 20ms by the C90Plus upon detection of a LoU event. The trip time of the selected breakers will be 3 to 5 cycles (48ms to 80ms) depending upon the breaker specifications. The overall trip time is less than 4 to 6 cycles.

- Name and Definition: **Annual Avoided Cost of Lost Production** is a measure of the effectiveness of the FLS to prevent tripping of the GTG(s) and complete loss of power to much or all of the production facilities. The avoidance of this lost production by the non-tripping of the GTG(s) can be quantified in real dollars.
- Purpose: This avoided cost (savings) can contribute to the upfront cost of implementation and operation of the Fast Load Shed system.
- Metric: Historical data on number of events per year, length of each event, size of loads (MW) being served, and cost of lost production per hour based on loads saved.
- Data: Events experienced over the demonstration period.
- Analytical Methodology: The PI will research the operational records for the Shipyard to establish the number of Loss of Utility events. The PI will establish the length of each outage. The PI will work with Shipyard Operations to establish an estimated hourly cost. And the size of the loads (MW) lost versus saved. This data will allow for the calculation of a yearly cost, or Annual Avoided Cost, for Loss of Utility Events. The Total Cost of the FLS can then be divided by the Annual Avoided Cost to establish a simple payback in years.
- Success Criteria: The upfront cost of the system divided by the Annual Avoided Cost of Lost Production is greater than or equal to the useful life of the FLS system.

- Name and Definition: **BESS Participation in Transition to Island Mode** can provide up to 1 MW of additional power to serve the Shipyard loads. The D400 will monitor the BESS site controller and provide current BESS power values (-500kW to +500kW) to the C90Plus for inclusion in the power balance calculation. Upon detection of the LoU event, the D400 will initiate the Microgrid control of the BESS to go to full kW output. This output will be maintained until the Diesel Generators are available to pick up load, acting as a "Bridge" until the back-up generation comes online. At that time, the BESS site controller will revert to normal operation mode.
- Purpose: To provide additional power to the Shipyard power system to allow the maximum MW of load to be supported during the critical transition to Island Mode.
- Metric: BESS Power (MW) flow, response time (ms), support time (seconds) and additional load maintained.
- Data: The D400 is controlling and monitoring the BESS site controller. The D400 will time stamp the initiating signal and the recorded BESS data. The SEL meter will provide additional data regarding the power flow and response of the BESS.
- Analytical Methodology: The time synchronization of the data in the D400 and SEL meter will allow for detailed analysis of the performance of the D400 controller and the BESS response during the transition to island mode. The ramp rate and power output can be verified. The power output of the BESS during this period will be translated into an

Avoided Cost of Lost Production as established in the previous Quantitative Performance Objective. This cost will be capitalized and added to Revenue Generated benefit calculated for participation in the ISO-NE Regulation market.

- Success Criteria: The MCS demonstrates that it is able to successfully initiate fast control of the BESS following and LoU event. Further, the BESS demonstrates a significant contribution to the support of the Shipyard loads thus reducing the time to restore full operations to the Shipyard.
- Name and Definition: **Ease of Use** will be demonstrated by the Operators ease in learning the system, the understanding of the HMI screens, the regular updates of the Load Shed Priority and use of the HMI system in aiding the Operator in the manual restoration of loads that were shed by the MCS/FLS.
- Purpose: The operation of MCS/FLS will predominately run via automation. However, the Operator plays a key role in interfacing with the MCS/FLS in establishing the Priority of loads to be shed based upon daily operational needs of the Shipyard. The HMI displays of tripped breakers as well as power flows on the monitored feeders will supplement the existing SCADA system by providing the Operator with additional real-time information.
- Metric: The degree of success in which the Switchboard Operator shifts learn to operate the system and their understanding and use of the HMI displays during a LoU event.
- Data: Measure the degree of knowledge through interview.
- Analytical Methodology: Interview.
- Success Criteria: The Operators understand and agree that the system is easy to monitor and operate.

- Name and Definition: **Operational value of MCS/FLS** will be determined by the successful demonstration of the MCS/FLS and the experience of NAVFAC management, Operators, and Technicians.
- Purpose: To evaluate the direct experience of NAVFAC management, Operators, and Technicians with the use of the MCS/FLS and the Operational benefits of having kept the Power Plant operational following a LoU event and the ability to maintain power to mission critical loads will be a positive for NAVFAC customers.
- Metric: The degree of satisfaction with the implementation and performance of the MCS/FLS.
- Data: Measure the degree of satisfaction with the MCS/FLS through interview.
- Analytical Methodology: Interview.
- Success Criteria: The NAVFAC management, Operators, and Technicians Switchboard Operator are satisfied with the implementation and operation of the MCS/FLS.

- Name and Definition: **Transferability of MCS/FLS to other DoD sites** will convey the likelihood that the demonstration can be repeated with success at other installations.

- Purpose: A common goal of all ESTCP demonstrations is to determine the breadth of applicability for a technology across a multitude of federal installations. Based on technical, operational, and economic characteristics we will attempt to estimate the scale of Loss of Utility issues within DoD.
- Metric: Review of Solicitations and Projects Underway.
- Data: Industry Awards and Projects out for Solicitation.
- Analytical Methodology: Industry knowledge.
- Success Criteria: Presence of new projects either awarded or out for solicitation.

Phase II - BESS

The objective of this phase is to demonstrate the capability and benefits of a BESS participating in Ancillary Services. The technical requirements include automated control and communication of the BESS with an ISO. The benefit in turn is the generation of revenue through payments from the ISO which can in turn create an annuity to be applied in payback of the investment. This positive cash flow may provide the opportunity for performance contracting such as Energy Savings Performance Contracts (ESPCs) and/or Power Purchase Agreements (PPAs). See Section 7.0 for further details.

While the BESS is set up to participate during this phase in ancillary services, sufficient storage capacity (20% State of Charge) is reserved for operation during Phase I. During operation in ancillary services, the BESS may be in either a charge or discharge command, the FLS takes the present power +/- kW of the battery Power Conversation System (PCS) into consideration when determining the amount load necessary to be shed. For example if the BESS is charging at 500kW, acting as a load, the FLS sees this as a load which can be controlled and further turned into an additional 500kW of capacity to support additional “real” loads, resulting in a net sum of 1MW of additional loads which can be saved.

Two metrics which determine the amount of revenue which will be generated in the ISO-NE Regulation Market are Automatic Response Rate (MW/min) of the BESS and its Hourly Performance (%). Multiplying these measurements by the capacity (MW) bid into the market will result in a Revenue Generated ($).

These metrics will be useful in determining the feasibility of technology transfer at other bases within the ISO-NE region, as well as the greater ISO/ RTO regions throughout the US with similar markets; such as PJM, NYISO, MISO, ERCOT, and CAISO.

Figure 3-1 Deregulated Electricity Markets

Table 3-2 Performance Objectives Phase II - BESS

Performance Objective	Metric	Data Requirements	Success Criteria
Quantitative Performance Objectives			
BESS Automatic Response Rate	MW/min	Logging w/ D400 and/or Power Quality Meter MeMeter	100 MW/min
BESS Hourly Performance	%	ISO-NE Reports	95%
Revenue Generated from BESS in Regulation	$	ISO-NE Reports	Aprox. $8,000/mo or $100,000/yr
Qualitative Performance Objectives			
Ease of Operational Use of BESS with ISO-NE	Operator Success in Learning the System	Switch Board Operator Feedback	Ability for operator with limited training to operate the system.
Transferability of BESS to Operate at other sites	Market Outlook	ISO/RTO, State, and/or Utility Policies	Regions encouraging participation of Energy Storage on grid.

- Name and Definition: **BESS Automatic Response Rate**, is a measurement of how quickly the Inverter can change state in response to instruction from the ISO. Example: Transition from -500kW to +500kW in how many seconds.
- Purpose: This measurement is used by the ISO to determine the value of the Regulation service provided by the ATRR. The higher the MW/min value, the closer the unit can follow the AGC signal, resulting in a faster response to the ISO's request in correcting frequency on the electric grid. This metric will influence how much revenue the BESS generates.

- Metric: The units are MW/min. ISO-NE can benefit from speeds of up to 100MW/min. The Inverter specified for this project is capable of 32MW/sec, which is -500kW to 500kW in one cycle (500kW/16ms). This equates to 1,920MW/min.
- Data: An SEL-735 power quality meter/logger will be used to measure kW output of the Inverter over time as it follows the AGC signal controlled by the ISO. A GE D400 will be used to log AGC signal commands via the Modbus communication; the D400 will be programmed to capture all relevant Modbus system control points including the kW command coming in from ISO-NE. Independently, ISO-NE's MIS reporting will provide monthly system performance data.
- Analytical Methodology: A curve depicting MW/min vs Time (hour) will be used to display the response rate as the Inverter follows the AGC signal. Multiple curves may be produced to show select hours that depict unique operating characteristics of the system.
- Success Criteria: The system is expected to provide a Response Rate in excess of 100MW/min at all times while following the ISO-NE AGC signal.

- Name and Definition: **BESS Hourly Performance**, is determined by the assets % participation within a given hour the system is providing service to ISO-NE.
- Purpose: Compensation from ISO-NE is in part based on the quantity of time the asset provides service. Participation is broken into hourly periods, where the market participant can choose "to" or "not to" run the asset in the next upcoming hour. Unlike a generator, the BESS has a limited capacity available to charge/discharge onto the grid, if the battery were to become exhausted or conversely completely charged then the unit will be forced to drop out of participation, this is referred to as "Fading" and will accrue a penalty multiplied against that participation hour.
- Metric: Time measured as a percentage, which is (Time of Participation / Given Hour)
- Data: Time of participation for each hour the BESS participated in the market will be tracked by ISO-NE's eMarket software and will be available online.
- Analytical Methodology: Performance will be based on % time of participation in a given hour. A graph depicting average daily % time of participation will be created.
- Success Criteria: The BESS has two parameters which can affect hourly performance. First being reliability of the BESS, dropping from participation while in an operating hour due to technical issues will directly affect performance; the second is "Fading" as described earlier in this section. An overall performance of 95% has been chosen to account for limited Technical Issues and Fading.

- Name and Definition: **Revenue Generated from BESS in Regulation**, is set by ISO-NE Tariff and Market Rule and along with the Regulation Clearing Price (RCP) determines the compensation a generator accrues for participation in the Regulation Market.
- Purpose: Performance in revenue generated while operating the BESS in the ISO's Regulation Market will determine the payback performance period on the capital investment of the BESS, and provide useful data which will contribute to determine if projects of this nature are suited for financing in performance contracting such as ESPCs.

- Metric: Hourly payments for regulation services shall be calculated as:

  (RCP * Time-on-Regulation Megawatts) + (RCP * Capacity-to-Service Ratio

  * Regulation Service Megawatts * (time on in minutes – fade time in minutes) / time on in minutes)

  Where…

  RCP = Regulation Clearing Price

  Time-on-Regulation Megawatts = Regulation Capability* (time on in minutes – fade time in minutes) / 60 minutes

  "Regulation Service Megawatts = the sum of the absolute value of positive and negative movement that would occur if the Resource responded at its Automatic
  Response Rate without delay in pursuit of changing AGC setpoints while providing Regulation within the hour, known also as "mileage." *(ISO New England: SECTION III, MARKET RULE 1, APPENDIX J)*

  "The Capacity-to-Service Ratio shall be determined by the ISO. The Capacity-to-Service Ratio is the relationship between Regulation capability provided and Regulation Service Megawatts provided in an hour. Based on historical analysis, on average, one megawatt of Regulation capability will produce ten megawatts of Regulation Service Megawatts. Based on this relationship, the Capacity-to-Service Ratio shall initially be set equal to 0.1 such that the revenue associated with Time-on-Regulation Megawatts and Regulation Service Megawatts associated with a Resource providing Regulation shall be equally split. The revenue split assumption and the Capacity-to-Service Ration may be changed from time-to-time and such changes shall be filed with the Commission for approval." *(ISO New England: SECTION III, MARKET RULE 1)*

- Data: ISO-NE will record, calculate, and provide reporting to the asset owner. A wired connection via an MPLS network, including a Router, RTU, and DMARC is required.
- Analytical Methodology: Monthly revenue will be graphed in $ vs Day
- Success Criteria: At this time, limited industry research exists which would substantiate an expected payback period for energy storage participating in a Regulation market, the focus of this demonstration will be to substantiate a revenue stream. Any amount of revenue generation will be considered a successful project at this stage, where a study to focus on optimizing revenue and payback may be justified in a later demonstration; including demonstration in each ISO territory with an active Regulation market. Based on models provided by ISO-NE, our estimate is that the BESS will generate around $8,000/mo or in the range of $100,000/yr, pending Regulation Clearing Prices.

- Name and Definition: The **Ease of Operational Use of BESS with ISO-NE** will serve to determine the level of operator technical training necessary to support operation of the system over its life.

- Purpose: Though the BESS will predominately run via automation, it should be determined what technical level of manual operation and monitoring will the system require while running on the ISO-NE regulation market.
- Metric: The degree of success in which the Switchboard Operator shifts learn to operate the system and respond to calls requesting readback on system status or Start-up/Shut-down of the BESS on the ISO-NE AGC signal.
- Data: Personal discussions and a survey form to collect feedback from the Switchboard Operators as well as PI.
- Analytical Methodology: Survey will be based on a scale of 1-10 for questions as they relate to ease of understanding operation of the systems.
- Success Criteria: The level to successfully understand and agree that the system is easy to monitor and operate on ISO-NE's signal should be no less than a 70%.

- Name and Definition: **Transferability of BESS to Operate at other sites** will convey the likelihood that the demonstration can be repeated with success at other installation.
- Purpose: A common goal of all ESTCP demonstrations is to determine the breadth of applicability for a technology across a multitude of federal installations. Based on technical, operational, and economic characteristics we will attempt to estimate the scale of potential to repeat for similar projects implementing a BESS and operation in an ISO Regulation Market.
- Metric: ISO/RTO policies and outlook on their individual market performance, compared to number/size of federal facilities within each ISO/RTO region.
- Data: What regions are deregulated and controlled by an ISO/RTO, which of these regions have a Regulation Market or are expected to have a regulation market meeting FERC Order 755.
- Analytical Methodology: Case by case analysis for each ISO/RTO and a general prospectus on the outlook of each individual market.
- Success Criteria: Based on the performance of the Portsmouth Naval Shipyard BESS on ISO-NE, determine by each ISO/RTO what policies or market clearing prices versus cost of technology are necessary to economically justify investment in additional systems.

Page Intentionally Left Blank

4.0 FACILITY/SITE DESCRIPTION

Portsmouth Naval Shipyard is a Navy facility located in Kittery, Maine. Founded in 1800 the Shipyard has a long history of supporting the Navy fleet, from building tall ships such as the USS Constitution, to the first submarines implemented in WWI and diesel subs for WWII, transitioning to nuclear during the Cold War. Today, the Shipyard supports the retrofit and refueling of the U.S. Navy's fleet of fast attack submarines, including the Los Angeles and Virginia class.

This demonstration focuses on the Shipyard's electrical generation and distribution infrastructure. The BESS and predominant equipment for the FLS/Microgrid will be housed at the Power Plant (Bldg. 72). Additional FLS hardware and fiber optic communications will installed on the 13.2kV electrical distribution grid at Substation 3 (Bldg. 175) and Franklin Substation (Bldg. 321).

4.1 FACILITY/SITE LOCATION AND OPERATIONS

Ameresco designed, implemented, financed and now operates and maintains the PNS Power Plant under an Energy Savings Performance Contract (ESPC) with the NAVY. Our team includes on-site fulltime staff that is intimately familiar with the shipyard's mission requirements and facility infrastructure and operations. This will assure the proper integration of the work of this study and close on-site monitoring of performance throughout the implementation and test periods. Below in Figure 4-1 is a depiction of Portsmouth Naval Shipyard, the red box indicates the bounds of this demonstration including both Phase I – BESS and Phase II – FLS systems

Figure 4-1 Portsmouth Naval Shipyard Demonstration

Figure 4-2 is a closer view of the demonstration site, which includes the Power Plant, Substation 2, Substation 3, and Franklin Station. Phase I of the demonstration will focus on the BESS which is located at the Power Plant on the 480V Station Service bus. Power is transferred from the BESS to Franklin Station via a 13.2kV loop feeder which then is stepped up to 34.5kV at the point of interconnection with the local utility. Section 5.3 addresses this architecture in further detail. For Phase II the Fast Load Shed (FLS) system will be installed with components being located at the Power Plant, Substation 3, and Franklin Station. Through these controls the Shipyard will have the capability to select a priority list for order in which loads should be shed in descending order non-essential to mission critical. First and foremost loads which support operation of the Power Plant will be kept online at all times, followed by select feeders located at the Power Plant and Substation 3 which provide power to the Dry Docks and/or other mission critical buildings. Franklin Station and Substation 2 will be isolated with all power being cut during an islanding event.

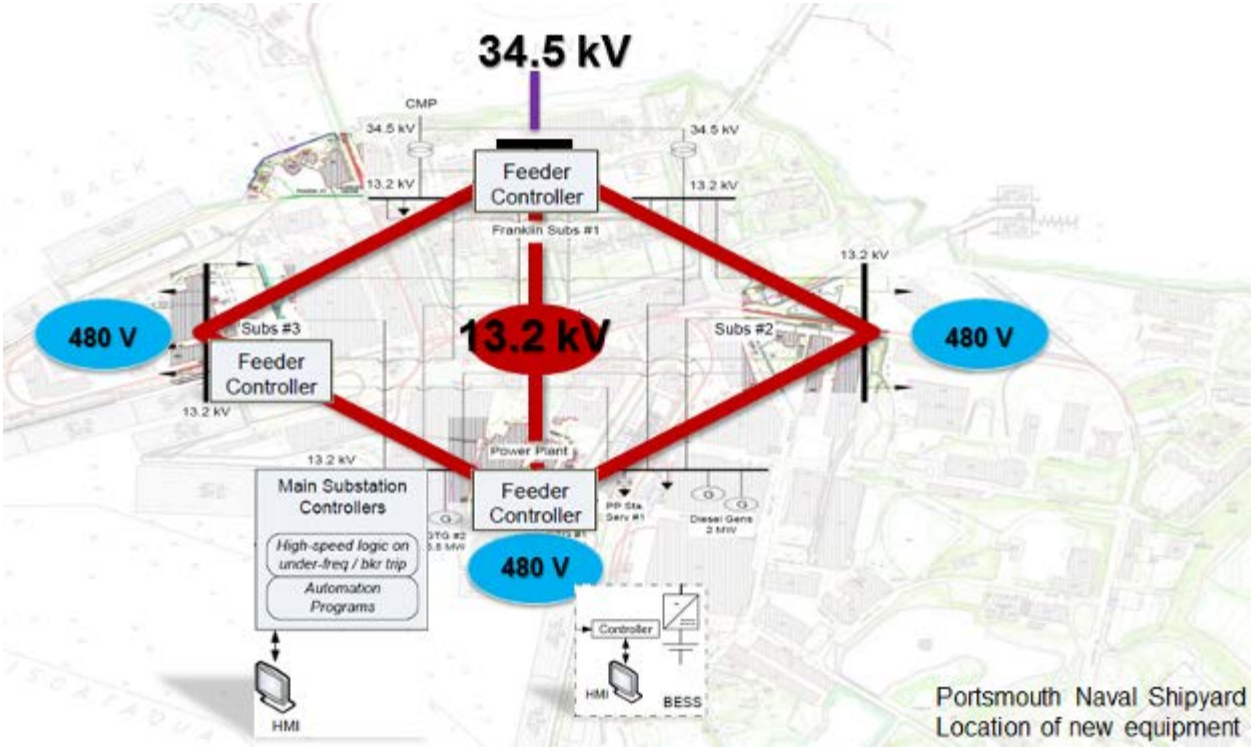

Figure 4-2 Demonstration Site

4.2 FACILITY/SITE CONDITIONS

Portsmouth Naval Shipyard (PNS) installed a 10.4 MW gas-fired combustion turbine cogeneration plant as part of a comprehensive Energy Savings Performance Contract (ESPC) executed in two phases between 2000 and 2002. The Energy Plant can operate in parallel with the Central Maine Power (CMP) utility grid or in island mode and includes: two 5.2 MW Solar combustion turbines, each with Heat Recovery Steam Generators (HRSGs) rated at 65,000 lb/hr each with supplemental fire, two 70,000 lb/hr packaged steam boilers, two 1.5 MW diesel emergency generators that support “black-start,” and a dedicated SCADA system.

The Energy Plant provides energy security (both electricity and steam) for mission-critical nuclear submarine activities on base while also producing significant energy and operating cost savings for PNS.

The proposed demonstration project would build upon the capabilities and controls of the existing Energy Plant to provide significantly enhanced energy security, and additional energy and operating cost savings to the government. The project will achieve this by focusing on two areas of concern.

Power Quality on the utility grid. Due to the success of CMP's and the state's renewable energy initiatives, approximately 30% of CMPs current power supplies come from wind-generated power. While this renewable resource provides many benefits, it does impose potential power quality issues on the grid (frequency and voltage fluctuations) due to the intermittent nature of wind power. This renders the power supply to PNS (and all other customers) less secure, and could cause additional power outages. In response to this problem, the regional Independent System Operator (ISO-NE) is developing capacity and performance payment rules for entities that provide frequency and voltage regulation capacity (also called "Ancillary Services"). The problem with current approaches to addressing this grid power quality problem is that they are very expensive to implement on a stand-alone basis and usually cannot be financially justified based on the potential Ancillary Services revenue alone. However, PNS is in a unique position to provide these Ancillary Services through a Battery Energy Storage System (BESS), at a competitive incremental cost due to the substantial electric infrastructure already in place. A new BESS would also enhance the reliability and island capabilities of the existing Energy Plant.

Loss of Grid Power and Re-Start Delay. The Energy Plant provides back-up power to mission-critical systems at the shipyard when power is lost from the CMP utility grid. To maximize the savings from the cogeneration of electricity and steam, the number of turbines on line depends upon the steam load. One turbine is always on line year around to satisfy process steam needs; the second turbine is brought on line during the winter. However, if the shipyard's total electrical demand (kW) is greater than the capacity of the operating turbine(s) when grid power is lost, then the turbine(s) become overloaded and trip out. This scenario historically occurs roughly twice a year due to weather events and other factors. (In 2011 it occurred during Hurricane Irene in August and again during a severe snow storm in October.) When this happens, plant operators must manually disconnect non-critical loads throughout the shipyard and restart the turbines. This process takes between one to three hours, during which time the entire shipyard is without power, except for isolated loads served by emergency generators and UPS systems. This vulnerability has become more pronounced in recent years as the shipyard's peak electrical demand has grown (due to growth in mission) from approximately 12 MW in 2000 to over 16 MW today. The shipyard would like to enhance the capabilities of their considerable on-site generation so that it could seamlessly serve designated critical loads without interruption whenever the utility grid is lost.

These two issues are relevant to most DOD facilities which typically have some on-site generation but are vulnerable to black-outs when grid power is lost. And their local utilities and Independent System Operators (ISOs) are increasingly grappling with grid stability issues as more intermittent renewable energy supply sources come on line. The successful demonstration of solutions to these issues at PNS would be relevant and important to nearly all military bases.

Page Intentionally Left Blank

5.0 TEST DESIGN

Phase I – MCS/FLS

- Fundamental Problem: The DoD community has recognized that the aging infrastructure of the commercial power grid has resulted in frequent power outages. Portsmouth Naval Shipyard experiences 2 to 3 such outages each year. These outages have resulted in the tripping of the Shipyard generating plant with outages of one to three hours. Conventional automated load shed systems use individual devices or programmable logic controllers and the initiation of tripping of loads takes 250ms to seconds. The loads to be tripped were selected in pre-defined blocks to assure the system stability which typically resulted in over-tripping. The development of IEC61850 protocol with GOOSE messaging between measurement devices and the FLS controller allows for the dynamic selection of the loads to be tripped based upon the availability of generating resources. The FLS reduces the time to initiate the tripping of the selected load circuit breakers to less than 20ms.
- Demonstration Question: Can a Fast Load Shedding solution eliminate the outages experienced by the Shipyard while maintaining energy surety for mission critical loads? Will the Annual Avoided Cost of lost production pay for the cost for the FLS solution? Can the MCS/FLS effectively utilize BESS technology to maximize the amount of load served?

Phase II - BESS

- Fundamental Problem: Many government facilities utilize on-site generation in the form of Combined Heat and Power (CHP), Renewable Energy such as Solar, Wind, or Geothermal, and/or Back-up Diesel Generation; however even with these resources most sites still experience blackouts during a loss of power supplied by the electric utility. The business case and economics supporting investment in distributed generation has been substantiated and is relatively common industry practice at this point; however this is not the case for Battery Energy Storage Systems and Fast Load Shed systems which architecturally represent a Microgrid. Additional value streams can be accounted for such as generating additional revenue through participation in Ancillary Services and avoided costs in Loss of Productivity; it is the purpose of this demonstration to quantify these values.
- Demonstration Question: Find the breakeven point where the upfront cost of the Technology plus the revenue from Ancillary Services and savings in avoided Loss of Productivity equals the economic life of the system.

5.1 CONCEPTUAL TEST DESIGN

- Hypothesis: The combination of implementing a Fast Load Shed system and Battery Energy Storage System with existing on-site generation can reduce and even eliminate facility wide blackouts at a base while also creating new value streams in the form of revenue from participation of the BESS in Ancillary Services (specifically Frequency Regulation) and avoided costs related to Loss of Productivity during an extended outage. The amount of revenue generated versus expected life of the systems will determine if the technology is a good candidate for inclusion in performance contracting such as Energy Savings Performance Contracts (ESPCs) and Power Purchase Agreements (PPAs).

Phase I – MCS/FLS

- Independent variable: The Independent Variable for MCS/FLS is the calculated value of self-generation, including pre-defined margins, available to support shipyard load following the Loss of Utility event. The real measured value of the loads are then summed, based upon the operator defined priorities, until that sum is less than or equal to the available generation post LoU. The remaining loads are then tripped in high speed. The end-to-end trip execution time for the FLS is expected to be 15 to 20 ms. The overall load trip time from detection of the LoU is dependent upon the existing breaker opening time. We assume that value is 5 cycles given the age of the breakers. The MCSFLS will be monitoring the breaker opening times as well as any failure to open. A breaker failure to trip could result in the generators tripping due to an overload as has occurred in the past. The Operator's selection of too many non-shedable loads (Priority equals 0) could also result in undesired tripping of the Power Plant.
- Dependent variable(s): The pre-LoU event values of power for the tripped loads at the Power Plant and Substation 3 will be evaluated against the settings in the C90Plus to validate the power balance calculation.
- Controlled variable(s): The existing Utility tripping scheme has is monitored by the MCS/FLS. It has not been modified so as to allow a valid comparison of the MCS/FLS with past events. Further, all loads at Franklin Substation and Substation 2 have been excluded from the generation- load power balance calculation.
- Test Design:

  See Appendix B, Performance Verification Test (PVT) plan.
- Test Phases:

  See Appendix B, Performance Verification Test (PVT) plan.

Phase II – BESS

The BESS did not participate in the market in 2014-2015 due to delays in signing of the interconnect agreement between the utility and the shipyard. What follows was the implementation plan for that approach.

- Independent variable: A Battery Energy Storage System consisting of a 500kW Power Conversion System (PCS) and a 580kWh Li-Ion Battery will be introduced to the Portsmouth Naval Shipyard's electrical grid, behind the meter, and used to participate in the ISO-NE Regulation market.

- Dependent variables:

  1. *Regulation Clearing Price* is set in the ISO-NE bid market, for the demonstration period the system will serve as a price taker and will not attempt to influence the clearing price.
  2. *Time ON Regulation* is the units of time in minutes that the system operates within a given hour.
  3. *Fade Time* is the units of time in minutes that the system reaches an upper or lower limit in State of Charge (SOC) which prevents the BESS from continuing to provide Regulation service.

4. *Regulation Service Megawatts* is the sum of the absolute value of positive and negative movement that would occur if the resource responded at its Automatic Response Rate without delay in pursuit of changing AGC setpoints while providing Regulation within the hour, known also as "mileage."

- Controlled variable: Participation in ISO-NE Regulation Market will be broken into one (1) hour blocks of participation with the intent to operate as many hours as possible for the duration of the demonstration period. The target will be operation 24/7 for a period of four (4) months from December 2014 through March 2015.

- Test Design: The BESS will be allowed to run on the ISO-NE Regulation market 24/7 over a four (4) month period beginning December 1st 2014 and ending March 31st 2015. Success in performance of the system for Phase I will be measured in the BESS' ability to create a new revenue stream through participation in ISO-NE's Regulation Market. The revenue generated by the BESS in Regulation can then be used in part to determine the economic value of investing in the technology when comparing the following metrics.

  1. Upfront Cost of Investment
  2. O&M Cost
  3. Useful Life
  4. Battery Re-gen Cost
  5. Number of Battery Re-gens
  6. Avoided Cost of Lost Production (To be performed in Phase I)

- Test Phases:

  1. Commissioning
  2. Commence Participation in ISO-NE Regulation Pilot
  3. Collect ISO-NE Monthly Reports
  4. Conclude Participation in Pilot
  5. Collect D400 Logger Data
  6. Performance Analysis
  7. Economic Analysis

5.2 BASELINE CHARACTERIZATION

Phase I – MCS/FLS

- Reference Conditions:

  1. Number of Loss of Utility Events causing tripping of Power Plant
  2. Length of outage for each event
  3. Cost of lost production for each event
  4. Power Plant power output at time of event.
  5. Other significant issues due to outages

- Existing Baseline Data: Obtain outage records from NAVFAC.
- Baseline Estimation: The PI will research the operational records for the Shipyard to establish the number of historic Loss of Utility events. The PI will establish the length of each outage. The PI will work with Shipyard Operations to establish an estimated hourly cost and the average load in MW being served. This data will allow for the calculation of a yearly cost, or Annual Avoided Cost, for Loss of Utility Events.

  The PVT results as well as three real life events during the demonstration period showed that the Power Plant could have remained online if the Franklin breakers were either 1) directly tripped by protective relays at Franklin, or were tripped by a high speed transfer trip signal from the CMP feeder breaker. See Section 6.0 and 8.0 for further details.
- The FLS has demonstrated that the high speed tripping of non-critical loads will maintain a steady-state generator-load balance that will allow for the Power Plant to continue to serve the mission critical load following a fault on the utility feeder. The Diesel Generators (3MW) were started by the Plant DCS during the Live Testing and helped with the quick restoration of power to Shipyard load. It may be that PNS or the PI can provide these details.
- Each F35 Controller has a circular event log. These event logs are automatically retrieved by the HMI/SCADA using the GE Integrator software. The data is time stamped and assembled in a time sequence report by the HMI. The Event Logs for the Live Testing are available in Appendix C.
- Data Collection Equipment: The FLS system will utilize GE F35 Feeder Protection Relays to collect generation and load data by measurement of power, voltage and current. The F35 provides an economical retrofit solution for existing switchgear as one F35 can monitor a single Bus Voltage and the currents for five circuit breakers or two bus voltages and current from four feeders. The D400 gateway will monitor the status of the BESS and the charge/discharge power of the BESS for inclusion in the FLS calculations by the C90Plus FLS Controller.

  The data collected by the MCS FLS proved to be very valuable in verifying the proper performance of the MCS FLS during the Simulated Tests that were conducted on December 3, 2015 and the Live Tests conducted on December 8, 2015. Subsequent events during the Demonstration Period have proved the value of the Data Collection capabilities of the MCS/FLS.

Phase II - BESS

- Reference Conditions:
  1. Regulation Clearing Price (RCP)
  2. Battery State of Charge (SOC)
  3. Automatic Generator Control (AGC) Signal

- Existing Baseline Data: Historic *Regulation Clearing Prices (RCP)* can be obtained from ISO New England's website, as seen in Figure 5-1. Samples will be downloaded and used to set monthly averages to be compared to the values collected during the demonstration period.

Figure 5-1 Historic Regulation Clearing Prices

http://www.iso-ne.com/isoexpress/web/reports/pricing/-/tree/ancillary-hourly-rcp-final

Sample CSV File Data from ISO-NE Website

Real-Time Final Hourly Regulation Clearing Prices
Filename: final_hourlyrcp_20141119_20141119.csv
Report for: 11/19/2014 - 11/19/2014
Report generated: 11/20/2014 15:46:31 EST

Day Date	Hour Ending String	Regulation Clearing Price $/MWh
11/19/2014	1	16.04
11/19/2014	2	10.36
11/19/2014	3	11.61
11/19/2014	4	8.5
11/19/2014	5	8.44
11/19/2014	6	92.35
11/19/2014	7	44.55
11/19/2014	8	35
11/19/2014	9	24.2
11/19/2014	10	27.47

Figure 5-2 represents Four-second AGC Setpoint Data for a Basecase ISO-NE Trinary Dispatch from representative simulations under identical system conditions for a set of conditions important to normal AGC dispatch. This data was developed in collaboration with DNV/GL (formerly KEMA) using the KERMIT simulation environment. KEMA simulated in open-loop the four-second AGC Setpoints for a set of 15 different resource characteristics taken two at a time (as specified by the 135 scenarios delivered by ISO) in order to investigate how these varying characteristics will affect the AGC Setpoints sent to the two individual resources. The set of 135 scenarios is arrived at by using the probability concept of combinations: 135 is equal to 16 (fifteen resource characteristics plus one null-set where only one resource is dispatched by AGC) choose 2 at a time (which equals 120), plus 15 repetitions (e.g., resource type 1 and resource type 1 are both dispatched by AGC, type 2 and type 2 are both dispatched by AGC, etc.). The state of the system was summarized for a set of seven days deemed by ISO to be fully representative of the set of conditions important to normal AGC dispatch. The data delivered to ISO are those simulated four-second AGC Setpoints for each resource for all seven days of each of the 135 scenarios and validation was performed on this data in order to verify to ISOs satisfaction that this data is representative of the AGC Dispatch that would have occurred given the assumptions.

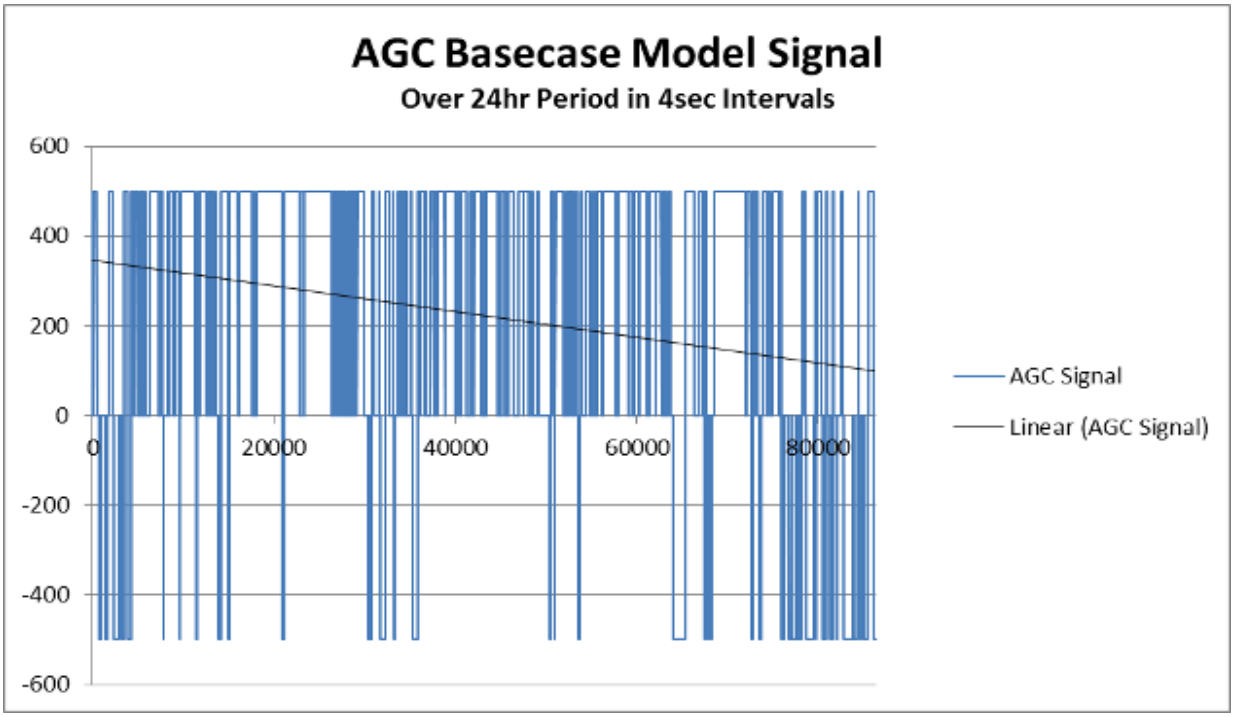

Figure 5-2 AGC Signal Model Data from ISO-NE

# of Times Reg High/Low/Mid Occurs			
Mid	Low	High	Total
6113	12533	2939	21585
28%	58%	14%	100%

- Data Collection Equipment:

  1. General Electric D400:
     This unit will be used to log data at the Modbus communication level between the RTU, Site Controller, PCS, and Battery. The pointlist is extensive and covers more parameters than we expect to be relevant for the demonstration analysis however we have decided to capture all operating data since the D400 contains sufficient memory to do so.

  2. Schneider Electric Laboratory Solutions SEL-735:
     This power quality and revenue grade meter serves two purposes in the demonstration; first is to report system response performance in kW back to ISO-NE with 0.3% accuracy in 4 second intervals, second is to log data useful for baseline and performance measurements such as the kW response and power quality metrics like Voltage, Amps, Frequency, and n^{th} Harmonics.

5.3 DESIGN AND LAYOUT OF TECHNOLOGY COMPONENTS

<u>Phase I – MCS/FLS</u>

- <u>System Design</u>: A Microgrid Control System (MCS) consisting of a Fast Load Shed (FLS) scheme is being implemented to detect a Loss-of-Utility (LoU) event and initiate Fast Load Shedding to maintain power balance for the Shipyard. The FLS consists of C90Plus FLS Controller that calculates power balance for the Power Plant and Substation 3 of the Shipyard. The loads served by Franklin Substation and Substation 2 were excluded in the Demonstration to minimize the installed cost of the MCS/FLS.

  F35 Feeder Controllers are installed on key circuit breakers at the Power Plant and Substation 3. These F35s monitor the breaker real time status and power measurements and communicate them C90Plus FLS Controller via IEC 61850 GOOSE message. A F35 is installed at Franklin Substation to detect the LoU event initiation by the existing protection and control system. This F35 also provides real time power measurements of the utility ties and status of the circuit breakers to the MCS HMI/Server.

The C90Plus calculates the post LoU power balance for the Shipyard and, upon detection of a LoU, will send trip signals to lower priority loads to maintain the power balance. The FLS also initiates tripping of three circuit breakers at Franklin Substation to avoid possible back feed from Substation 3. All trip signals are transmitted via a GOOSE message to the F35 relays. The fast (15 to 20ms) initiation of tripping of the loads by the FLS should allow the Power Plant to remain in-service instead of tripping due to a severe power imbalance as has occurred in the past. The FLS programming will allow Shipyard operators to maintain power flow to mission critical loads.

An option is included in the design to have the D400 Data Gateway & Controller monitor the status and real power flow to/from the BESS prior to LoU and input this power value to the C90Plus controller for inclusion of available BESS margin in the power balance calculation. If enabled, the D400 will initiate a full discharge of the BESS to provide additional load support for the Shipyard until the Diesel-Generators have started and are ready to pickup load. The start-up of the Diesel-Generators is automatically initiated by the Power Plant DCS upon detection of the LoU. The LoU detection signal for the DCS is used by the MCS/FLS. This option will provide up to 1MW of additional load support.

- **Components of the System:** The MCS/FLS consists of the following major components. All of these components are commercially available and have been applied in customer facilities.

GE Multilin C90Plus Fast Load Shed Controller: The controller is the main decision point of the system where all the calculations and intelligent commands are sent. It is a substation hardened device with a real-time operating system that is highly reliable and accurate. It is also equipped with a local annunciator panel and HMI screen (optional) for ease-of-use for maintenance and operation and embedded IEEE 1588 time synchronization protocol support. The controller receives source and load data from the F35 via analog GOOSE. The load shed commands are issued via GOOSE to end devices. The C90Plus Controller is installed in a Rack at the Power Plant with the F35 Relays.

GE Multilin F35 Feeder Protection Relays: The FLS utilizes F35 feeder protection system to provide feeder protection, control, monitoring and metering in an integrated, economical, and compact package. The F35 provides a cost-effective solution as the F35s are configured to protect up to five feeders with bus voltage measurement. It also provides fast and deterministic execution of programmable logic, which is necessary for substation automation applications. The F35s have embedded IEEE 1588 time synchronization protocol support over Ethernet.

GE Multilin D400 Data Gateway & Controller: GE's Multilin D400 is a secure, hardened, advanced substation gateway that collects metering, status, event, and fault report data from serial or LAN based intelligent substation devices and accepts time sync signals from SNTP/NTP Servers,. The Multilin D400 summarizes data from the substation devices and makes it available locally /remotely through a standard secure web browser (HTTPS). It supports serial and/or LAN connections to SCADA masters.

The Multilin D400 provides the computing platform necessary to automate substation procedures, such that intricate processes are carried out safely and efficiently by creating custom automation programs using IEC 61131 compliant tools, and perform basic math functions on data points using the built-in calculator tool. Using pass-through connections, users can extract valuable non-operational data such as digital fault recording (DFR) records, event and oscillography files. The user can also access the historical log files and upload the archived data for trending and analysis.

GE Multilin ML3100 Managed Ethernet Switch: The MultiLink™ ML3000 Series of Managed Ethernet Switches provide extremely reliable networks and feature SMART RSTP feature allows for recovery from faults in ring network architectures in less than 5 milliseconds per switch in the network – 10 times faster than generally available in standard Ethernet. The complete set of network management functions available provides the configurability and monitoring capability needed for most applications, while the high level of security features available ensures your network is protected from tampering or illegal access. The ML3100 series supports the end-to-end transparent clock, boundary clock and ordinary clock as specified in the IEEE 1588v2 standard. Ambient operating temperature is -40°C to +85°C without fans.

Arbiter Systems 1084B GPS Satellite Controlled Clock: The overall time synchronization of the MCS/FLS components is effected by the application of the Arbiter 1084B clock with GPS Satellite Antenna The Model 1084B provides the most-needed GPS system clock features in an economical package and adds an LCD setup/status display and keyboard. The Clock is equipped a Network Time Protocol / Precision Time ProtocolServer option allows the Arbiter Clock to act as a time server over an Ethernet network using the Network Time Protocol (NTP) and the Precision Time Protocol (PTP). The Precision Time Protocol Server supports the IEEE 1588-2008 protocol and functions as a grandmaster clock. NTP accuracy is better than 100 microseconds and PTP accuracy is better than 1 microsecond.

Dell PowerEdge 720xd 2ru Rack Mounted Server: Equipped with 2.5 GHz Xeon CPU, 16 GB RAM, 750 W power supply, 2 hot swappable 1 TB SATA HDD with RAID 1, and Dual 1 GB Network Interface Card, Microsoft Windows Server 8. A separate 42" LG LED-backlit LCD display panel is being provided.

Software included for the HMI and Data Storage:

GE PMCS/Cimplicity 9.0 SCADA Software: Based on decades of GE innovation, award winning Proficy HMI/SCADA – Cimplicity 9.0 delivers a proven platform to precisely monitor and control every aspect of the MCS environment, equipment and resources. Cimplicity improves your structured database quickly and easily, enabling RtOI – for the right information, anytime, anywhere. With Version 9.0, you can create longer point names including alarm, event and action IDs – now up to 256 mixed case characters. With this more descriptive database, improved tree views and richer objects, you'll have better interaction with newer protocols, ease maintainability, and see improved modeling and a richer experience.

Kepware KEPServerEX is the industry's leading communications platform that leverages OPC (the automation industry's standard for interoperability) and IT-centric communication protocols (such as SNMP, ODBC, and web services) to provide users with a single source for industrial data. Designed around the four product pillars of Proven Interoperability, Centralized Communications, On-Demand Scalability, and Industrial Strength, KEPServerEX is developed and tested to meet our customers' performance, reliability, and ease-of-use requirements. It is equipped with Modbus Suite for high speed data retrieval of real time power system values and alarm events from the GE Devices.

GE EnerVista™ Integrator enables seamless integration with GE's Multilin™ devices for new or existing automation systems through tested, pre-configured memory maps. EnerVista Integrator reduces the setup and commissioning efforts required to obtain device, event and waveform data by over 90% for integration with an HMI, SCADA or DCS system.

- System Depiction: See Figure 5-3 below and Appendix E for a System Architecture Diagram

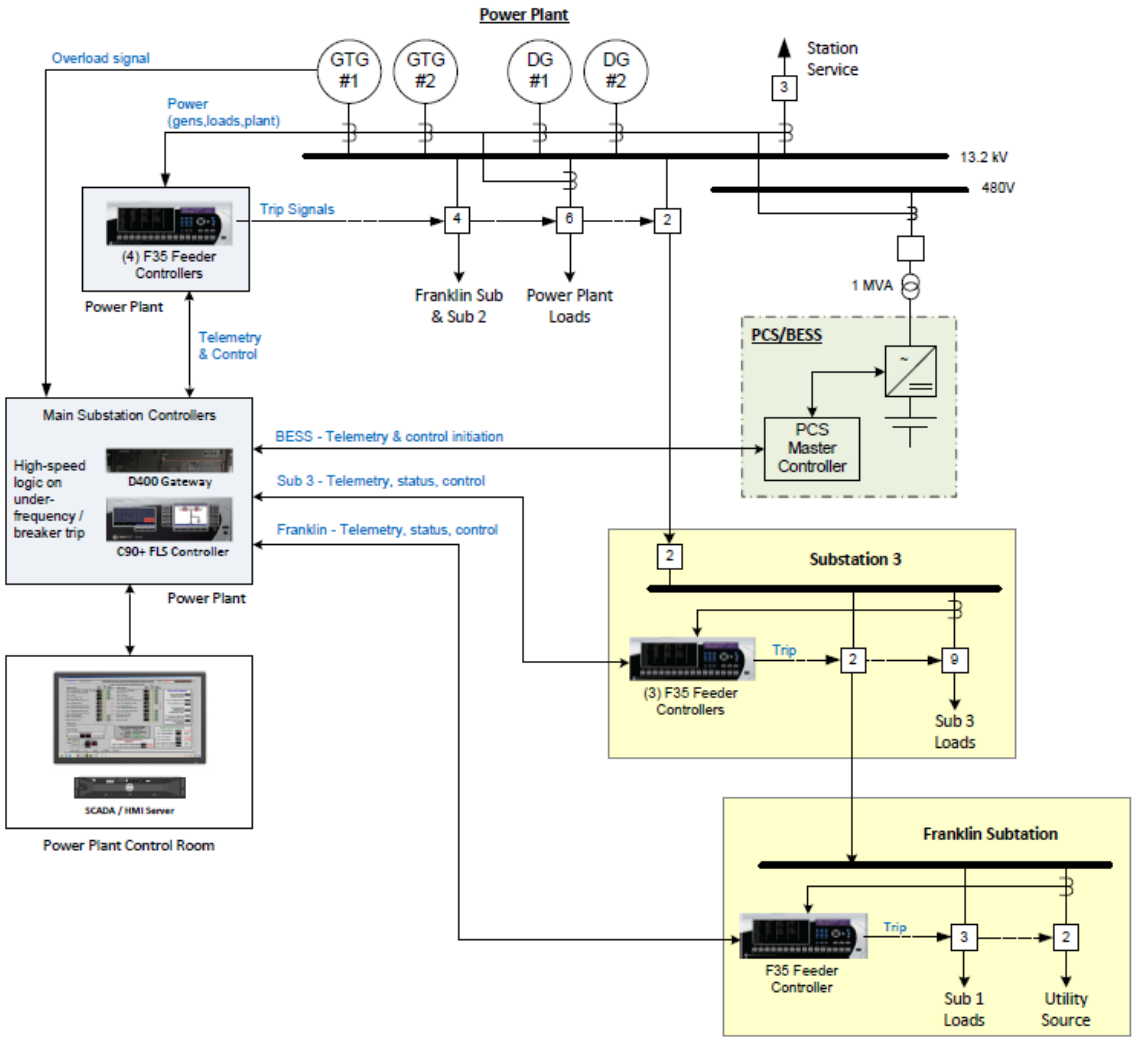

Figure 5-3 System Architecture Diagram

- System Integration: The design concept for integrating the MCS/FLS system was for it to coexist with the existing systems. The physical interconnections have been designed for easy removal at the end of the demonstration period, if desired. All existing protection and control functions continue to operate as if the MCS/FLS did not exist. The design also allows for future expansion of the system to include loads at Substation 2 and Franklin Substation.

- System Controls: Operations raised a concern that resulted in the design being modified to incorporate Local/Remote (43L/R) switches to provide operations personnel to disable control of a circuit breaker during maintenance. The L/R contacts are being monitored by the F35 relays and alarmed at the HMI to assure that they are not inadvertently left in a Local Mode. The C90Plus will continue to function, but the specific breaker will be treated as a High Priority load if the breaker is placed back into service. The F35s have been equipped with Test Switches that open the trip circuits to allow for testing of the relays. The F35s include Trip Circuit monitoring that will detect the open trip circuit and initiate an alarm at the HMI and relay.

Phase II – BESS

- System Design: The Portsmouth Naval Shipyard electrical grid infrastructure consists of two major substations (Sub 2, Sub 3), a CHP Power Plant, and an interconnection with the public utility (Franklin Sub). These four stations are connected at the 13.2kV via loop feeders with each station then distributing 480V service to various loads on the yard. Looking back to Figure 5-3 above, the BESS is located at the Power Plant as depicted within the dashed line box. A full size drawing can be found in Appendix E.

- The system consists of a 500kWh Li-Ion battery, 500kW Power Conversion System (PCS), Site Controller, Remote Terminal Unit (RTU), and Router providing communication to/from ISO-NE across an MPLS network.

  During Phase I of the demonstration the Fast Load Shed, consisting of the Main Substation Controllers, HMI, Feeder Controllers, and Trip Signals, will not be installed. They will be part of Phase II, once the BESS has completed demonstration in the ISO-NE Regulation Pilot.

- Components of the System: The BESS consists of three major components, a 580kWh Li-Ion Battery, 500kW Inverter/Rectifier (PCS), and Site Controller. Additional communications necessary for participation in the ISO-NE Regulation market include a Remote Terminal Unit (RTU), Power Quality and Revenue Meter, and Router.

580kWh Li-Ion Battery – Manufactured by Saft America, the IM20 unit is built on a containerized platform. The container is populated with ten (10) battery strings wired in parallel, with each string consisting of twenty eight (28) modules wired in series. The unit is self-contained and includes the HVAC and Fire Suppression systems necessary for safe operation. Auxiliary power for the battery management, HVAC, and Fire Suppression system are fed separate from the battery via independent 480V and 120V service fed from house power.

500kW Power Conversion System (PCS) – Produced by Dynapower Corporation, this unit houses an Inverter, Rectifier, and Isolation Transformer which serves to charge/discharge the battery from/onto the electrical grid at a 480V 3 Phase level. The unit is actively liquid cooled and includes a top mounted liquid/air heat exchanger. Auxiliary electronics, fans, and pumps are powered internally via the PCS' 480V connection on the Station Service bus.

Site Controller – Also manufactured by Dynapower Corporation, this unit consists of a Central Processing Unit (CPU), Analog I/O board, Digital I/O board, Ethernet Hub, and Human Machine Interface (HMI) touch screen. This is the primary interface for manual and remote operation of the BESS, from this point operator commands and system limits are processed based on data collected from the Battery and PCS. This is also the location where the ISO-NE communications hardware is housed, which includes the RTU and Router.

RTU – The Remote Terminal Unit selected for this project is manufactured by OSI, the model is the OSIRIS and comes with a number of different communication ports including Digital I/O, Analog Inputs, Serial, and Ethernet ports. The unit is connected solely by Ethernet and serves to translate the Modbus communications coming from the Site Controller to DNP3 which is then relayed to the Router for communication to ISO-NE.

Router – The Cisco 1941 series router is supplied by ISO-NE and serves as the primary connection and firewall to their dedicated MPLS network. Data packages containing operating commands and performance information are received and sent in both directions between the BESS and ISO-NE. This is a live connection with a 4 second sample rate. Included in the router is a 3G wireless Enhanced High-Speed WAN Interface Card (EHWIC), purposed as a back-up form of communication to/from ISO-NE in the event of a failure of the land-based circuit.

Power Quality Revenue Meter – ISO-NE requires a Power Quality meter that can report within 0.3% accuracy performance of the regulation resource, ie. BESS. The SEL-735 is programmed to communicate via Modbus over Ethernet the power in kW to the RTU, which is then translated via the Cisco router back to ISO-NE. The Current Transformers (CTs) for this unit are installed between the PCS and Station Service bus, effectively reporting the "gross" power response which includes the auxiliary power necessary to operate the PCS. See Figures 5-4 and 5-5 for further installation details.

- System Integration: The BESS is tied into the existing Station Service bus by breaker 52G as seen in Figure 5-4. This breaker was previously purposed for an emergency diesel generator which had since fallen into disrepair and made obsolete at the time of installation of the two (2) 1.5MW during construction of the CHP plant. This drawing is a simplified one-line representation of the BESS' relationship to the public utility interconnection. The BESS is tied into the electrical grid at the 480V level of the Station Service bus which is fed by 480V/13.2kV transformer(s) at the Power Plant. Loop feeder(s) then connect the Power Plant to Franklin/Franklin Annex (Substation 1 in Figure 5-4) which then finally translates via F1 or F12 through 13.2kV/34.5kV transformers to the public utility.

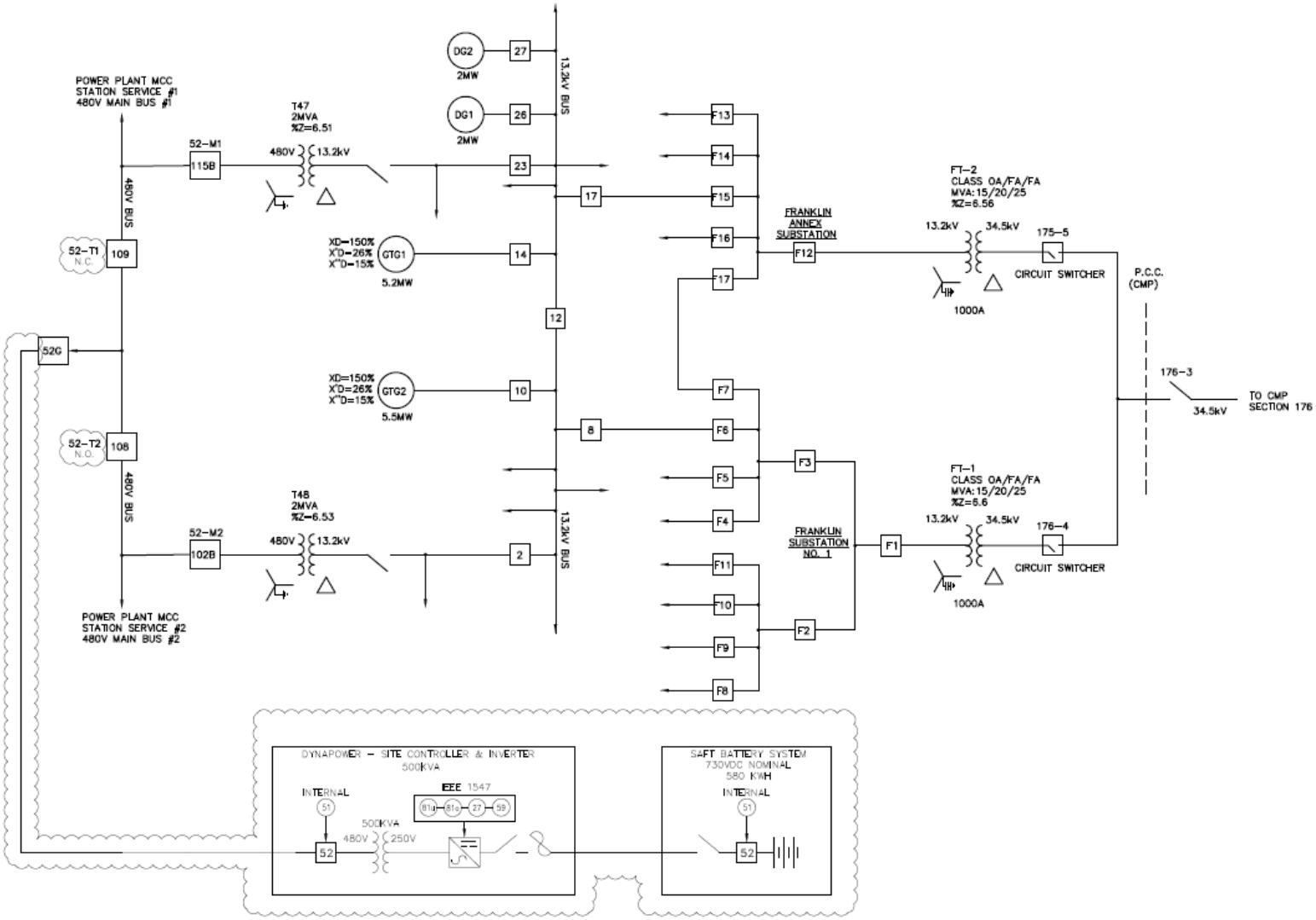

Figure 5-4 BESS Electrical Connection Diagram for PNS As-builts

This drawing can also be found in Appendix G along with the full BESS As-builts.

Figure 5-5 is the detailed installation drawing for the SEL-735 Power Quality and Revenue Meter, notice that the PTs and CTs are installed between the PCS and Station Service bus, mounting in this location provides a calculation of “gross” power, effectively measuring the charge/discharge of the PCS as well as the auxiliary loads (such as controls, fans, and pumps) necessary to operate the PCS.

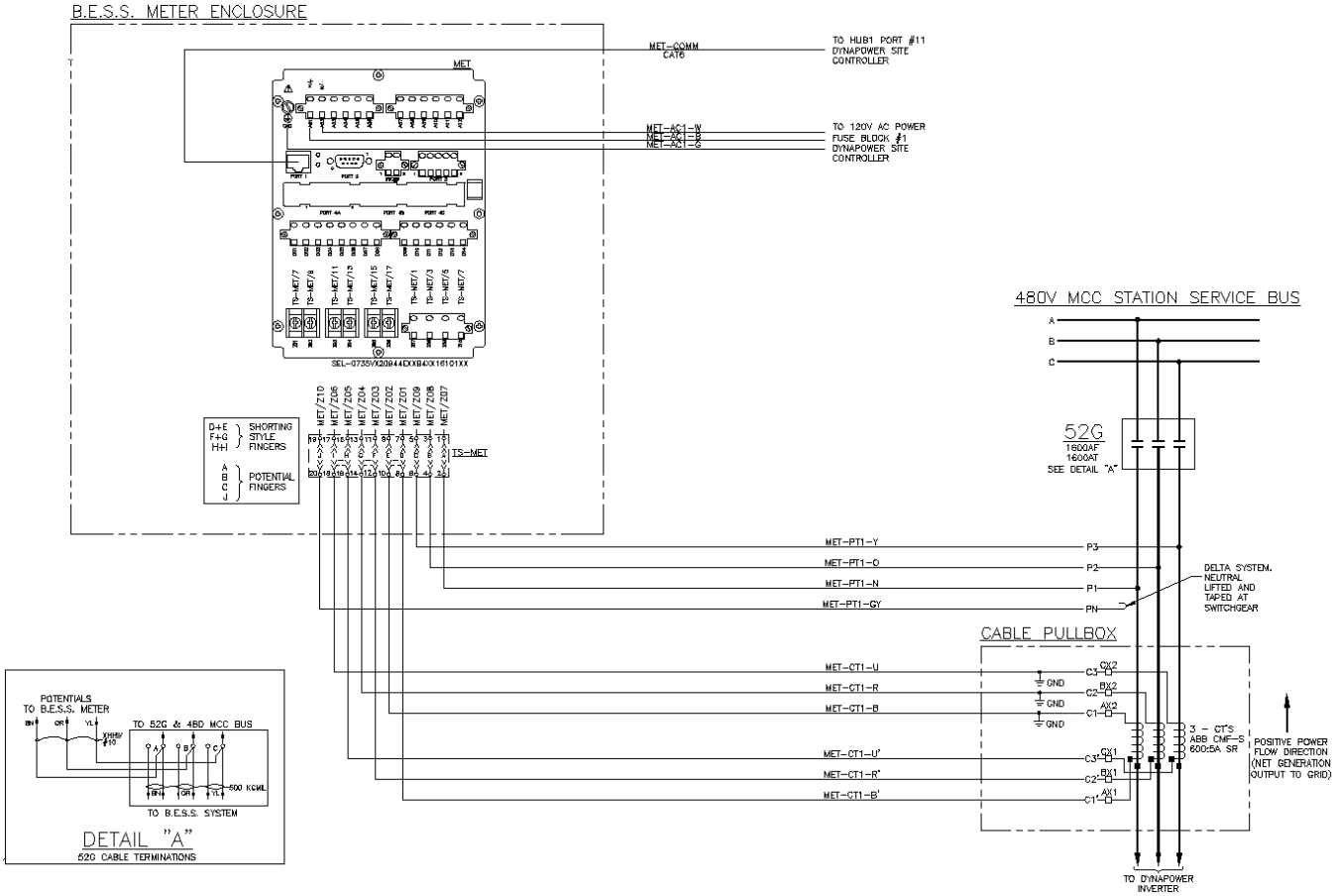

Figure 5-5 Detailed Installation Drawing for SEL-735 Power Quality and Revenue Meter

This drawing can also be found in Appendix G along with the full BESS As-builts.

- System Controls: The following screen shots represent the HMI touch screen found on the front of the Site Controller. Three operating modes are built into the design, Remote Dispatch, Automatic Voltage Regulation, and Microgrid Dispatch; in addition the system can be run manually in local mode. For Phase I of the demonstration only the Remote Dispatch mode will be used and steps to operate are detailed as follows.

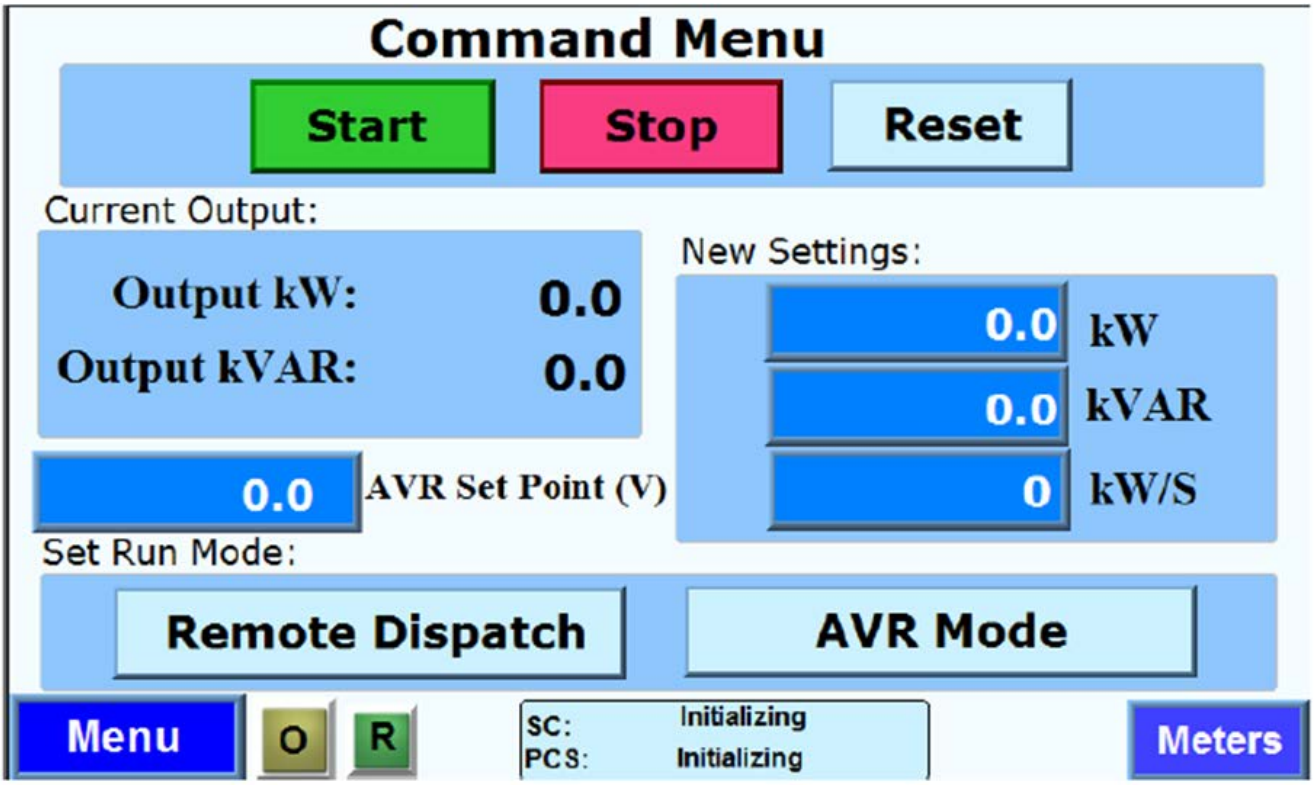

Figure 5-6 Dynapower Site Controller Command Screen

1. *Put Site Controller in Remote Dispatch mode (press "Remote Dispatch")*
2. *Select Ramp Rate (press blue box next to "kW/s", enter value)*
3. *Leave "kW" and "kVAR" at "0" values*
4. *Bring PCS Online (press "START" button)*

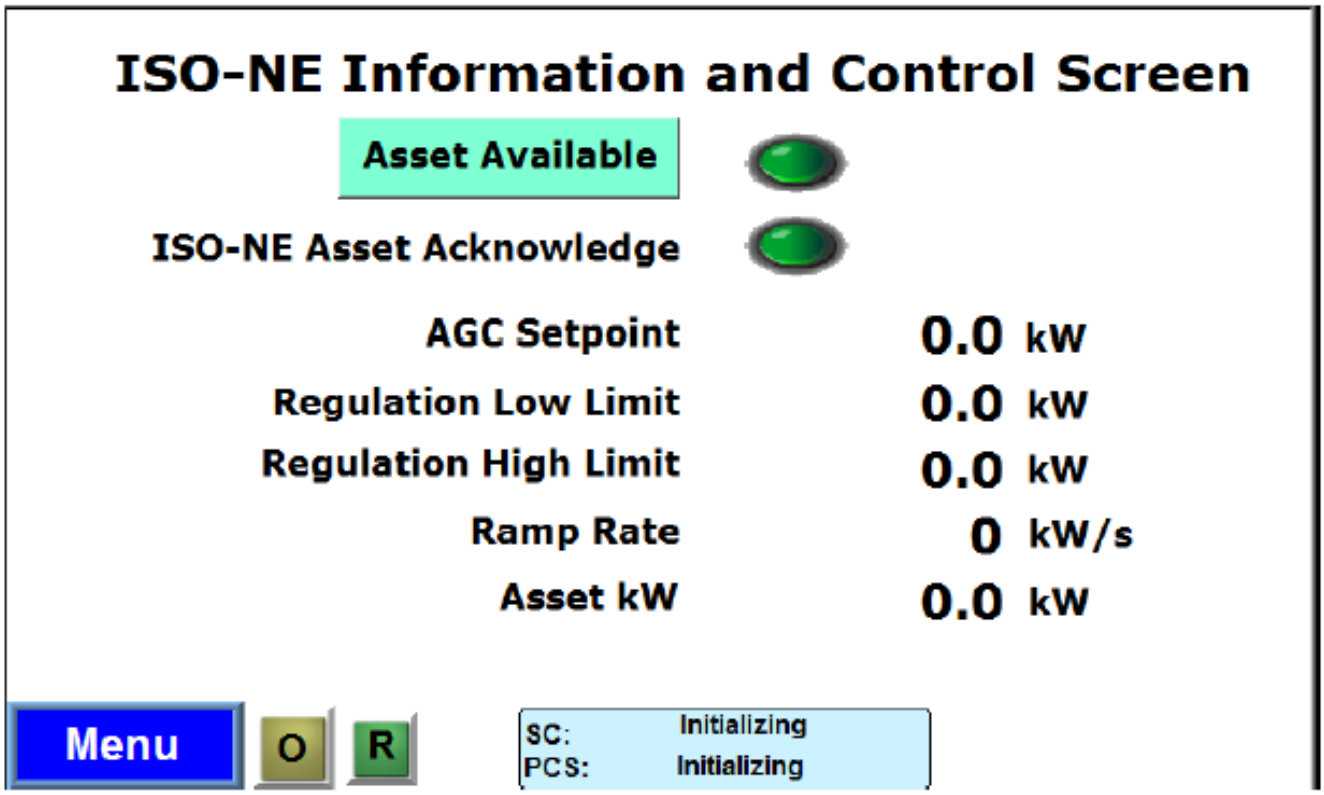

Figure 5-7 Dynapower Site Controller ISO-NE Screen

1. *Send Asset Available status to ISO-NE (press "Asset Available")*
2. *Receive Asset Acknowledge from ISO-NE (status light illuminated)*
3. *Asset begins following AGC Setpoint*
4. *IF "Asset Acknowledge" is dropped by ISO-NE, unit goes into STOP*

A full stop can also be initiated by pressing the "STOP" button on the Site Controller Command Menu or by depressing any one of the seven "E-STOP" buttons. Additional protective monitoring is programmed into the Site Controller and will STOP the BESS in the event of a Battery, PCS, or Site Controller fault. Also, for Phase I the BESS will go into Stand-by in the case of an Islanding event, this prevents the BESS from continuing to follow the ISO-NE AGC signal while isolated from the local electric utility. In Phase II the BESS will turn over to Microgrid Dispatch mode during an Islanding event. Wiring details for the E-STOP and Protective Monitoring are found in Figure 5-8 as well as Appendix G.

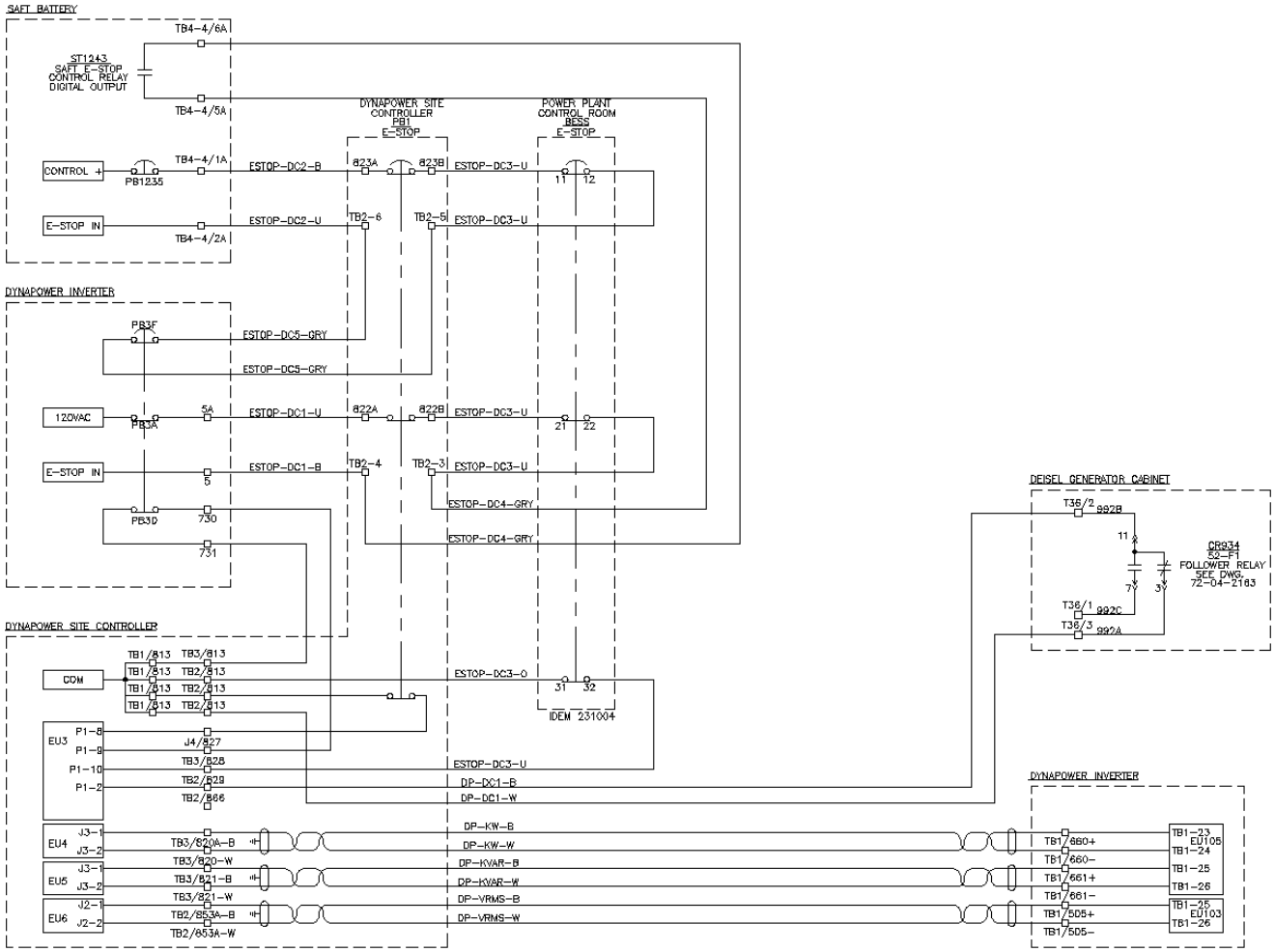

Figure 5-8 BESS E-Stop Schematic from PNS As-builts

5.4 OPERATIONAL TESTING

<u>Phase I – MCS/FLS</u>

- <u>Operational Testing of Cost and Performance</u>: The MCS/FLS will collect power, voltage and current values for monitored circuit breaker. The F35 relays are mounted in Racks and the phasing and measured values were verified during Factory Acceptance Testing. The Commissioning tests will utilize Doble F6150 Relay Test sets. The analog input to the relays will be verified during the Commissioning Tests. The HMI analog values will all be verified at the same time thus assuring data accuracy. The final verification will be made during the Performance Verification Tests as the Doble Test Sets will be used for offline testing of the Solution. The accuracy of the F35 relays will also be verified against existing meters once the relays are connected to the potential transformers and current transformers during online testing.
- <u>Modeling and Simulation</u>: No modeling or simulation will be performed.

- Timeline: The MCS/FLS Solution underwent Site Commissioning and Performance Verification Testing per the following Schedule:

Monday	Tuesday	Wednesday	Thursday	Friday	Saturday
9/7/2015	9/8/2015	9/9/2015	9/10/2015	9/11/2015	9/12/2015
Holiday	Travel	<==========Pre-Commissioning==========>			
9/14/2015	9/15/2015	9/16/2015	9/17/2015	9/18/2015	9/19/2015
<==========Site Commissioning==========>					Off
9/21/2015	9/22/2015	9/23/2015	9/24/2015	9/25/2015	9/26/2015
<==========Site Commissioning==========>					Off
12/7/2015	12/8/2015	12/9/2015	12/10/2015	12/11/2015	12/12/2015
Prep	<=Performance Verification Testing=>			Debrief	Off

Figure 5-9 MCS/FLS Commissioning and PVT Schedule

Please see GE Site Commissioning Plan (SCP) and Performance Verification Testing (PVT) plans included in Appendix B, the following are excerpts taken from those documents

Overview of the Site Commissioning Plan is as follows:

The following sections present overview of all chapters of this document and associated tests. It is the intention that every individual analog or digital input and output will be tested and verified during this test.

1. ***Pre-testing Inspections***
   a. *The inspections presented in Chapter 2 confirm that all hardware and software has been properly installed and the FLS system is available for testing.*

2. ***System Startup and Integrity Tests***
   a. *The tests described in Chapter 3 verify proper device and system startup and proper communications of all devices for the FLS. This includes the MCS HMI Server, C90+ Fast Load Shed Controller, F35 Multi- feeder Management Relays, GPS clock, and networking equipment.*

3. ***Relay GOOSE Communications Tests***
   a. *The tests described in Chapter 4 will verify the proper communication between the FLS Controller, MCS HMI, and F35 relays.*

4. ***System I/O Tests***
   a. *The tests described in Chapter 5 verify the processing within the system of all I/O points, including proper Display of their statuses and values in the MCS HMI Server. Both hardwired I/O points and the points polled from the F35 relays (soft I/O points) will be tested.*

5. ***Testing Restrictions***
   a. *When actual operation of the breaker(s) is not possible, the physical I/O shall be verified to the closest termination practicable.*

6. ***HMI Tests***

   a. *The tests described in Chapter 6 will verify the functionalities and screens configured in the Microgrid Control System (MCS) Human Machine Interface (HMI).*

7. ***System Time Synchronization Tests***

   a. *The tests described in Chapter 7 verify the MCS Time Synchronization to the GPS clock.*

Overview of the Performance Verification Test Procedures (PVT) is as follows:

FLS System Operation during PVT

The recommended method of verification that the FLS system is operating as designed is the trigger a number of actual load shed events, using several different Load Priority configurations to create different scenarios for shedding of loads. This live testing is subject to the approval and participation of NAVFAC personnel. Each scenario will be detailed on the Fast Load Shed Live Testing Configuration Form.

Live Fast Load Shed Verification

Using the "Fast Load Shed Live Testing Configuration Form", the settings of each FLS scenario will be recorded. The individual breaker loads and priority assignments are recorded, along with the loads being supplied by all available sources.

Once the desired test scenario has been programmed via the HMI FLS Configuration screen, the settings are recorded on the form. The total Facility load being supplied is totaled manually and entered in the appropriate space on the form. The Load to Be Shed will be the result of the Utility load minus the available online generation supply.

The loads expected to be shed are noted in the column "Expected Shed"

After the Load Shed Event, the loads actually shed will be noted in the "Actually Shed" column. The scenario will then be evaluated and the "Expected Shed" will be compared against the "Actually Shed", and the FLS response will be evaluated.

Oscillography records can be downloaded from the individual relays and analyzed. The HMI Event database and the HMI Alarm database can likewise be analyzed.

One form will be completed for each scenario being tested.

Results from both SCP and PVT are included in the final documents found in Appendix B of this report.

Phase II – Operation of BESS in ISO-NE Regulation Pilot

Installation of the BESS commenced in April 2014 and was completed in May 2014. Commissioning was completed during June 2014 and entailed a list of system checks of each primary piece of equipment including Battery, PCS, and Site Controller; followed by a series of real-time operational tests of the BESS on the ISO-NE AGC signal.

Participation in the ISO-NE Regulation Pilot was to commence once an Interconnection Agreement was reached between the Navy and Central Maine Power. Pending signing of the IA, the BESS was expected to run 24/7 from mid-December through March 31st 2015. Performance data was to be collected over this period with the expectation that during this time operating characteristic of the AGC signal would vary depending on time of day, weather conditions, and utility outages.

Though system checks while connected to ISO-NE were performed and successful operation was confirmed, a signed IA between the Navy and Central Maine Power was not obtained in time for participation in the ISO-NE Pilot program.

(Copies of the IA and modified Navy contract with CMP can be found in Appendix F)

Looking back to Phase I, the BESS was integrated and tested in conjunction with the GE FLS to demonstrate operation as both a "Buffer" and "Bridge".

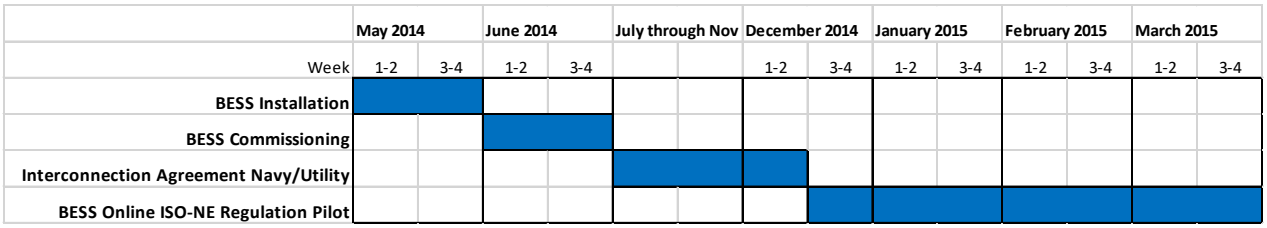

Figure 5-10 BESS Installation through Demonstration Schedule

5.5 DATA COLLECTION

The data collected for the MCS/FLS events originates from the C90Plus, F35s and D400. The F35 will provide the real-time information for the monitored circuit breakers. The F35 will also provide detailed records of the measured values, receipt of trip command from the C90Plus and waveform (Oscillography and Data Logger information). It is anticipated that GE will support Ameresco and NAVFAC with the analysis of each event during the Demonstration Phase. Ameresco/NAVFAC will be responsible for retrieving the records and forwarding them to the GE Project Manager.

- Data Collector(s): The GE F35, C90Plus and D400 each log pertinent data. The GE HMI utilizes GE Cimplicity SCADA software. The routine analog data is retrieved from the devices on realtime (every 2-3 seconds) basis and displayed at the HMI. This data can be stored on a scheduled interval in the Historian. Alarm events are logged and stored as they occur. The analog and digital data event log and waveforms are automatically retrieved by the solution and stored in Kepware Server software installed on the physical server hard disk

The Main MCS/FLS HMI Screen provides the Operator with a complete picture of the system. Key Summaries: Fast Load Shed System Status, Load Shed Summary, Load Breaker Status (Open, Local/Remote, Load Values, Shed Priority) and Minimum Load to Maintain (Station Service Load) and Power Source Summary (Utility, GTGs, DGs, and BESS). It also provides the means of assigning Load Shed Priorities, Enabling/Disabling the MCS/FLS, Enabling the inclusion of the BESS in the FLS Calculation, and Displaying an Expected Value of Load to be Shed.

Additional HMI Screens allow the Operator to know the status of the Local/Remote (L/R) switches installed on each breaker. The FLS automatically assigns a zero (0) priority for any breaker that is under Local control. This means that this load is not tripped for a LoU event and that it will continue to be served by the available generation Infeeds.

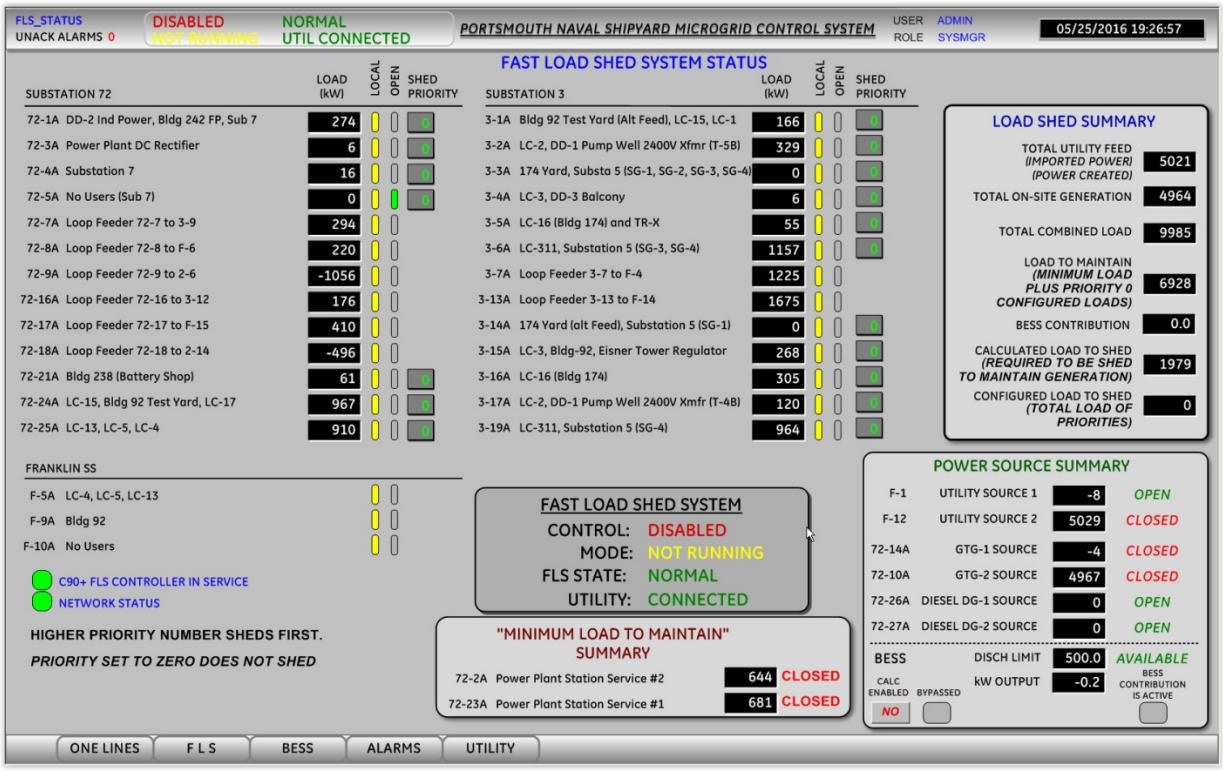

Figure 5-11 Main MCS/FLS HMI Screen

- Data Recording: Data recording is automatic in the devices as well as with the Cimplicity HMI/SCADA software.
- Data Description: The F35 has flexible settings for data capture. The internal sampling rate for measurements and protection functions is 64 samples per cycle. The oscillography sampling rate is selectable at 8, 16, 32 or 64 samples per cycle. The PNS sampling rate has been set at 32 samples per cycle. The F35 also include a Data Logger can record up 16 channels simultaneously at a sampling rate of 15 to 3600000 ms in steps of 1ms. The Data Logger recorders have finite recorder memory. An example of the memory capability is as follows: 15ms sampling time, 8 analog channels gives 120 seconds of stored data.

Each F35 Controller has a circular event log. These event logs are automatically retrieved by the HMI/SCADA using the GE Integrator software. The data is time stamped and assembled in a time sequence report by the HMI. The Event Logs for the Live Testing are available in Appendix C.

The C90Plus provides a Report (see Figure 5-12 below as an example) for each Fast Load Shed event. This Report provides power values for all Infeeds and Loads at the time of the C90Plus load shed decision point. The report documents which Infeeds were lost, the available generation in the Microgrid Island as well as the minimum amount of Load that was calculated to be shed and the actual amount of Load Shed based upon the assigned Priorities and measured power values.

The C90Plus does allow for a reserve margin for each Infeed to be used to avoid shedding loads, however, PNS Power Operations' made the decision to not depend upon available reserve margin for a LoU event. The primary goal of this demonstration was to keep the Power Plant operational so as to minimize the outage and restoration time. The FLS Reports for the PVT Live Testing can be found in Section 6.

- Data Storage and Backup: The F35 records data per the settings applied. The HMI/SCADA system automatically retrieves data and stores in a Historian. The Dell PowerEdge R720xd server is equipped with a 1 TB HDD. The backup for data would default to NAVFAC defined solutions. We recommend that the data be backed-up on a monthly basis although we do not anticipate that the hard disk capacity will be fully employed during this Project demonstration period.
- Non-standard Data: The Operator Logs will need to be completed after each event. This log can be prepared on the HMI using Excel software and can be printed out for hand written reporting, if necessary. The Operator Event Log is contained in the Performance Verification Test document, which is included in Appendix B.

Relay Data	
Relay Name	C90Plus
Firmware Version	1.90
Last Setting Change	Oct 16, 2016 12:43:59
Calculation Mode	Adaptive
Contingency Time Setting	1000 s
Events Enabled	Yes

FLS Report Summary	
Start Date and Time	Oct 16, 2016 12:33:55.727964
Duration	1000 s
Total Infeed	5093.2 kW
Total Reserve	0.0 kW
Total Avail Load	5121.0 kW
Total Infeed Lost	1047.5 kW
Total Load Shed Requested	1148.6 kW
Any FLS Comms Trbl	Yes

Infeed Designation	Infeed ID	Lost	Power	Reserve
GTG2	IF3	No	4044.7 kW	0.0 kW
GTG1	IF4	No	1.0 kW	0.0 kW
DG-1	IF5	No	0.0 kW	0.0 kW
DG-2	IF6	No	0.0 kW	0.0 kW
SS72-8A	IF7	Yes	143.4 kW	0.0 kW
SS72-9A	IF8	Yes	-962.8 kW	0.0 kW
SS72-17A	IF9	Yes	310.5 kW	0.0 kW
SS72-18A	IF10	Yes	-515.6 kW	0.0 kW
SS3-7A	IF11	Yes	841.5 kW	0.0 kW
SS3-13A	IF12	Yes	1230.5 kW	0.0 kW
BESS	IF32	No	0.0 kW	0.0 kW

Load Group Designation	Load Group ID	Priority	Power	Shed Request
SS72-1A	LG1	2	81.7 kW	No
SS72-2A	LG2	0	274.7 kW	No
SS72-3A	LG3	9	5.1 kW	No
SS72-4A	LG4	5	275.9 kW	No
SS72-5A	LG5	17	0.0 kW	Yes
SS72-7A	LG6	0	0.0 kW	No
SS72-8A	LG7	0	0.0 kW	No
SS72-9A	LG8	0	0.0 kW	No
SS72-16A	LG9	0	0.0 kW	No
SS72-17A	LG10	0	0.0 kW	No
SS72-18A	LG11	0	0.0 kW	No
SS72-21A	LG12	18	60.1 kW	Yes
SS72-23A	LG13	0	748.1 kW	No
SS72-24A	LG14	1	429.1 kW	No
SS72-25A	LG15	16	804.9 kW	Yes
SPARE1	LG16	0	0.0 kW	No
SPARE2	LG17	0	0.0 kW	No
SS3-1A	LG18	3	84.4 kW	No
SS3-2A	LG19	7	240.1 kW	No
SS3-3A	LG20	15	18.3 kW	Yes
SS3-4A	LG21	0	17.3 kW	No
SS3-5A	LG22	14	8.4 kW	Yes
SS3-6A	LG23	4	23.6 kW	No
SS3-7A	LG24	0	0.0 kW	No
SS3-13A	LG25	0	0.0 kW	No
SS3-14A	LG26	11	0.0 kW	No
SS3-15A	LG27	6	1595.9 kW	No
SS3-16A	LG28	12	256.9 kW	Yes
SS3-17A	LG29	8	120.2 kW	No
SS3-19A	LG30	10	76.3 kW	No
SSF-5-9-10	LG31	32	0.0 kW	Yes
	LG32	0	0.0 kW	No

Figure 5-12 Example C90 Plus Report from October 16, 2016 LoU Event

Calibration

- Equipment Calibration: The GE Multilin relays and D400 were tested during their production and were built specifically for the Demonstration. The F35 relays measurement accuracies are: Current: ± 0.25% of reading or 0.1% of rated for 0.1 to 2.0 x CT rating; Voltage: 0.5% of reading; and Real Power is + 1.0% of reading. These accuracies are not tested for each device, but sample testing is performed as the design of the devices and selection of components assures better results than in the specification.
- Post-Processing Statistical Analysis: An experienced GE engineer will review the data collected from a LoU event to ensure reasonableness of collected data and to identify possible discrepancies, such as unexpected results from the event. There have been three events since the PVT Testing in December. In each case, the GE engineers have reviewed the system performance and provided feedback to AMERESCO and PNS. See Section 6 for additional details.

Phase II – BESS, Participation in the ISO-NE Regulation Market

The SEL-735 Power Quality and Revenue Meter was built to order specifically for this demonstration by Schweitzer Engineering Laboratories and is shipped with certificate of calibration. This meter is accurate to at least 0.3%.

The D400 will be used to log Modbus communication points over Ethernet so calibration for this device is not applicable.

All other data collection and reporting is performed by ISO-NE and is transmitted to ISO-NE via the DNP3 protocol over a dedicated MPLS network.

These devices were ultimately not utilized for operation in the ISO-NE Pilot program however the SEL-735 did prove to serve as a secondary meter to capture dispatch capacity of the BESS during Phase I.

5.6 DATA RESULTS

Please go to the following appendices to view data results…

APPENDIX B - Performance Verification Test Plan

APPENDIX C – Performance Verification of the Fast Load Shed Solution

APPENDIX D – Event Logs for Live Event Testing of the Fast Load Shed Solution

6.0 PERFORMANCE ASSESSMENT

Refer to Section 3.0 for "Table 1 – Summary of Live Test Results"

Review of Quantitative Performance Objectives

- **Energy Security -** The FLS solution is being applied to assure that the Shipyard generators remain on-line following the tripping of the utility tie breakers. This facilitates the rapid restoration of power to the Shipyard loads and eliminates the disruption of shore power to the boats. The FLS solution provides adaptive tripping by monitoring the power values of the shipyard loads, shipyard generation (infeeds) and utility power (lost infeed). Following the LoU event, the Operator will document which generators were online and whether they remained online following the FLS tripping of loads.

- **Proficiency of MCS to Maintain Generation – Load Balance for Loss of Utility -** The data captured by solution for a Loss of Utility event is time stamped (microsecond accuracy) and stored in the HMI Historian. More extensive time stamped data for each load and source is captured and stored in the F35s and C90Plus. This device data can be retrieved and stored at the HMI server. The operator will capture a post event screenshot of the HMI display to provide a complete record of the breakers tripped and generation and load values.

  The data stored on the HMI server will be reviewed following an event and summarized in a form that lists the pre/post-event power data for all infeeds, each load circuit, the shed Priority of each load, and the C90Plus list of loads shed. This table will indicate which loads the HMI show as tripped and their priority. This allow for a comparison of the actual load shed versus based upon priority versus the pre LoU event. It will also provide a documented record of the post-event status of the Shipyard power system. The analysis of the data will be done Post-event by the PI, GE engineer and NAVFAC personnel to verify that the C90Plus tripped the proper amount of load to maintain the generation-load balance.

- **Demonstration of Fast Load Shedding –** The post event analysis will include the evaluation of the timing of the events as well as the waveforms and the operation of the monitored point within the C90Plus and the F35 feeder controllers. This data will be presented in a tabular format and any deviations from expected operational times will be noted.

- **Annual Avoided Cost of Lost Production –** The PI will establish the length of each outage. The PI will work with Shipyard Operations to establish an estimated hourly cost. And the size of the loads (MW) lost versus saved. This data will allow for the calculation of a yearly cost, or Annual Avoided Cost, for Loss of Utility Events. The Total Cost of the FLS can then be divided by the Annual Avoided Cost to establish a simple payback in years.

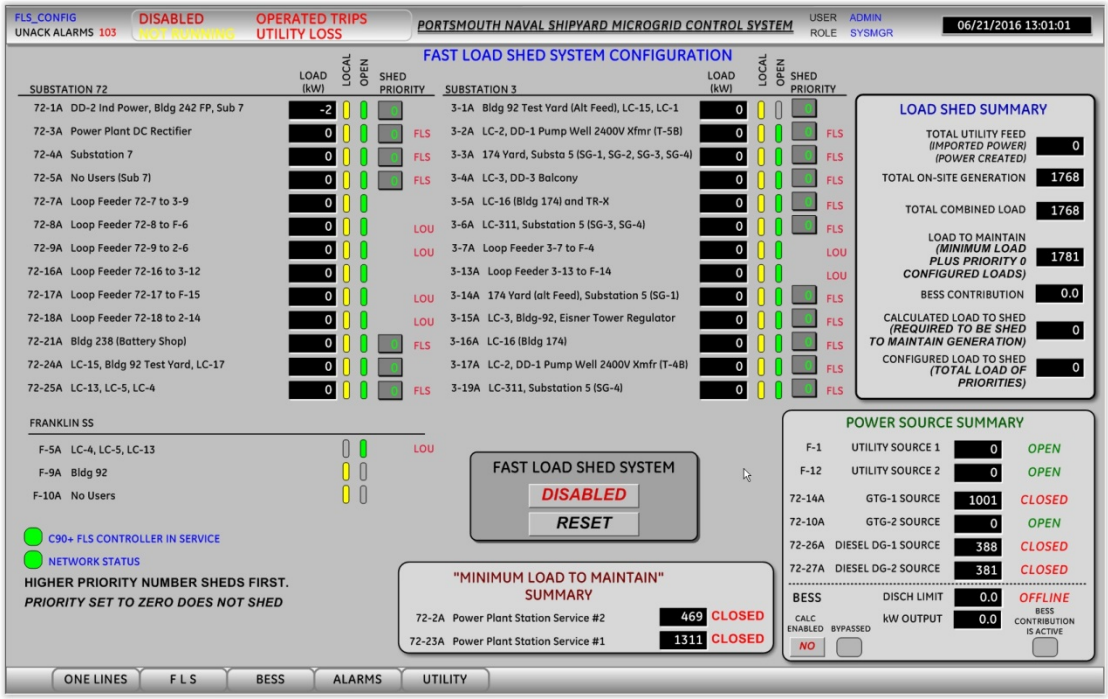

Figure 6-1 Example of HMI Screenshot – Post Event Analysis

- **BESS Participation in Transition to Island Mode –** The BESS can provide up to 1 MW of additional power to serve the Shipyard loads. The D400 will monitor the BESS site controller and provide current BESS power values (-500kW to +500kW) to the C90Plus for inclusion in the power balance calculation. Upon detection of the LoU event, the D400 will initiate the Microgrid control of the BESS to go to full kW output. This output will be maintained until the Diesel Generators are available to pick up load, acting as a "Bridge" until the back-up generation comes online. At that time, the BESS site controller will revert to normal operation mode.

  * Ultimately we were unsuccessful in getting the GE C90 to properly include this capacity in its calculation. Additional programming and tests would need to be performed to verify if this function is viable.

  <u>Review of Qualitative Performance Objectives</u>

  Ease of Use - will be demonstrated by the Operators ease in learning the system, the understanding of the HMI screens, the regular updates of the Load Shed Priority and use of the HMI system in aiding the Operator in the manual restoration of loads that were shed by the MCS/FLS.

  Operational value of MCS/FLS – will be determined by the successful demonstration of the MCS/FLS and the experience of NAVFAC management, Operators, and Technicians.

External Validity - Transferability of MCS-FLS application to other DoD sites – will convey the likelihood that the demonstration can be repeated with success at other installations.

Performance Verification Testing (PVT)

Please refer to Appendix C for the complete reports.

GE Microgrid Fast Load Shed Operation - The MCS continually monitored the PNS incoming utility breakers located in Franklin Substation for an islanded condition. An island condition was detected by the new F35 relays based upon tripping of the utility tie breakers by the existing utility under/over-voltage and under/over-frequency protective relays. When an island condition was detected, appropriate IEC 61850 Generic Object Oriented Substation Events (GOOSE) messages were sent to the MCS. When the PNS power system islanded from the main power grid the MCS completed the following actions (the priority of load shedding "candidates" is pre-configured):

Table 6-1 Operational Steps to Island

Step #	Step Description	Notes
1	Loss of utility; F1 and F12 at Franklin Substation trip and/or under-frequency detected at Power Plant (PP)	
2	Main substation controller sends trip messages to feeder controllers	Using IEC 61850 GOOSE messaging
3a	PP substation breakers 8, 9, 17 and 18 tripped by fast load shedding logic in main substation controller	Separates PP from Franklin Substation and Substation 2
3b	Feeder controllers trip Substation 3 breakers 7 & 13	Separates Substation 3 from Franklin Substation
3c	Power Plant feeder controllers trip appropriate load feeders to balance available generation	Depending on the output of the GTGs, station power requirements, and loads current being served
3d	Substation 3 feeder controllers trip appropriate load feeders to balance available generation	Same as 3c
3e	Franklin Substation feeder controller trips breakers 5, 9 and 10	Prevent back feeds through load centers
4	BESS Site Controller turns control of BESS over to D400 to charge or discharge real power to help balance available generation	C90Plus initiates Mode change in BESS Site Controller.
5	NAVFAC personnel initiate sequence to bring further generating units on-line and adjusting BESS output	Diesel Generators are automatically started and synchronized by DCS
6	NAVFAC personnel close breakers to pick-up additional critical loads	

To complete steps 3c, 3d, and 3e above, the MCS had up to 30 pre-defined load shedding tiers with corresponding priorities. The total power shed will be calculated from the instantaneous power loads recorded by GOOSE messages from the UR F35 relays just before the islanding event.

Simulated Testing

The first phase of the Demonstration of this system was performed by Simulated Testing (SIM Test) on December 3, 2015. Two tests of the FLS were conducted by varying the output of the PNS Gas Turbine Generators. The SIM Testing consisted of simulating the open of the Utility tie breakers and allowing the FLS to initiate breaker tripping actions per the above sequence. PNS Power Operations cutout the trip circuits by the opening of the trip test switches for each F35 relay. The detection of the Loss of Utility (closure of the Breaker F1 & F12 'b' switches) was simulated by placing a jumper across the appropriate input terminals of F-F35-1 at Franklin Substation. The trip outputs of the F35 relays at the Power Plant, Substation 3 and Franklin Substation were not disabled for the SIM Test so as to provide indication that F35 relays did attempt to trip the appropriate breakers. However, the trip outputs were not connected to the actual trip coils of the 13.2kV breakers.

The first control action initiated by the C90Plus for a Loss of Utility event is to create a power island consisting of the Power Plant and Substation 3. This command is communicated to the F35 controllers by sending a GOOSE message to two (72-F35-2 & 72-F35-3) of the four F35 relays at the Power Plant and a a single F35 relay (3-F35-2) at Substation 3. Each relay trips two loop feeders. This includes the two loop feeders that tie the Power Plant to Franklin Substation and the two loop feeders that tie the Power plant to Substation 2 (Step 3a), and the two loop feeders that tie Substation 3 to Franklin Substation (Step 3b). The single F35 at Franklin also tripped three load breakers (Step 3e). These breakers have the potential to be backfed from Substation 3 and the Power Plant.

Steps 3a, 3b and 3e occurred for both Simulated Tests. These actions resulted in complete loss of service to the Substation 2 and Franklin loads.

The Loss of Utility message is received by the C90Plus Fast Load Shed (FLS) device which continuously calculates the generation-load imbalance for the Power Plant/Substation 3 island. For Simulated Test #1 and #2, the C90Plus initiated tripping via GOOSE message (Step 3c & 3d) of the load breakers at Substation 3 and the Power Plant based upon the Load Priority Schedule established by PNS. Each F35 received the message and took action to trip the appropriate load breakers.

The BESS is operated during this testing as well and was tested in two operating conditions "Buffer" and "Bridge".

a. In "Buffer" mode: The unit is dispatched at the time of disconnection from the utility (operation of the FLS), but its capacity was not taken into account with the load shed calculations (referred to as "Buffer" mode). Thus the capacity of the BESS served as an additional 500kW "Buffer", where the FLS maintained critical loads to match the available capacity of the Gas Turbine Generators only. For initial testing the focus of the BESS was to confirm successful dispatch of the unit, but not to allow the FLS to take the additional generation capacity into consideration within the load shed calculations.

This was deemed a prudent approach to first confirm the programming to dispatch the BESS was functional.

b. In “Bridge” mode: The BESS was tested during a later PVT with the additional 500kW capacity of the battery taken into account with the load shed calculations. In this mode the BESS operates at full discharge, holding additional critical loads, until the emergency diesel generators come on-line, at which time the loads being held by the BESS are transferred to the generators; effectively acting as a “Bridge”.

In both the “Buffer” and “Bridge” operating modes the BESS dispatches and continues to put out a max discharge of 500kW until the emergency diesel generators come on-line. The “Bridge” mode was not tested during the demonstration, due to the inability to get the GE C90 to include the available battery storage in its calculations.

It should be noted that a Table was developed for logging of the Pre-FLS Test conditions by Ameresco, GE and key NAVFAC personnel, see Table 6-1 below as an example. A complete set of tables can be found in Appendix C.

Table 6-2 FLS Performance Verification Test Example

Portsmouth Naval Shipyard

Fast Load Shed System (FLS) Performance Verification Test

Scenario: Summer - CTG#1 **CTG#2 was running to provided Steam

Test Date: 12/3/2015 15:16:23 — Sim: X

Test No.: 1 of 2 — Live:

Fast Load Shed Test Configuration

Priority 0 - 32	Breaker	Actual Load	Total Load	Shed (Y / N)	HMI (Y / N)	Relay (Y / N)
32	F-10	Insert Total from Sub 2 Calc or Alt Sub 2 Loop Calc		Y	Y	Y
32	F-9			Y	Y	Y
32	F-5			Y	Y	Y
32	72-18a			Y	Y	Y
32	72-9a			Y	Y	Y
32	72-17a	4179		Y	Y	Y
32	72-8a			Y	Y	Y
32	3-7a			Y	Y	Y
32	3-13a			Y	Y	Y
18	72-21a	88	88	Y	Y	Y
17	72-5a	0	88	Y	Y	Y
16	72-25a	1230	1318	Y	Y	Y
15	3-6a	494	1812	Y	Y	Y
14	3-19a	0	1812			
13	72-4a	7	1819			
12	3-14a	5	1824			
11	3-16a	337	2161			
10	3-5a	49	2210			
9	72-3a	5	2215			
8	3-17a	60	2275			
7	3-2a	514	2789			
6	3-15a	549	3338			
5	3-4a	7	3345			
4	3-3a	155	3500			
3	3-1a	172	3672			
2	72-1a	128	3800			
1	72-24a	1725	5525			
0	72-16a	-96	Do Not Add			
0	72-7a	-119	Do Not Add			
0	72-23a	91				
0	72-2a	1287				
	Total Load	11082				

Source	Actual Load
UTILITY-1	5846
UTILITY-2	0
GTG-1	4701
GTG-2**	461
DG-1	0
DG-2	0
BESS	0
Total Gen	5162

Sub 2/Franklin	
2-1	
2-2	
2-4	
2-5	
2-10	
2-16	
2-17	
F-10	
F-9	
F-5	
Total	

Alt Sub 2/Franklin	
F1/F12	5846
	Subtract
PP <-> Sub 2 72-18a	-605
PP <-> Sub 2 72-9a	-1017
PP <-> Frank 72-17a	332
PP <-> Frank 72-8a	404
Sub 3 <-> Frank 3-7a	1428
Sub 3 <-> Frank 3-13a	1125
Total	4179
Load to Shed = PP/Sub3 Infeeds	1667

NAVFAC

AMERESCO

GE

This Table, along with a few quick math calculations, allowed the Test participants to predict which breakers should be tripped for each scenario. In both tests, the C90Plus attempted to shed the correct amount of load required to maintain the balance of generation and load for the Power Plant/Substation 3 island.

The Tables for each Test as well as the screen shots of the HMI Pre-Test and Post Test Conditions can be found in Appendix C. The values from the Pre-Test were used to fill-out the Table. The calculation of the PP/Sub3 Infeeds determines the amount of Priority Load to be shed. If this value is positive, then successive Priority loads are accumulated until the "Total Load" is greater than the PP/Sub3 Infeed (see center column of the Table). If the PP/Sub 3 Infeeds is negative, then this indicates that there will be surplus of power available after the Power Plant/Substation 3 power island is formed and none of the loads in the island will need to be shed.

Please note that the specific value of the load shed ultimately is determined by the actual loads at the time a Loss of Utility event occurs and the trip priorities in effect at the time that the C90Plus locks in its' calculation and establishes the load to be shed. Any variation in the Island loads is accounted for by changes in the Utility Infeed as the Shipyard DCS acts to maintain relatively constant power output when connected to the Utility. This variation in loads was observed during the PVT and made it challenging to log the values into the Table. The use of the HMI screen shots facilitated this effort, also found in Appendix C.

It should also be noted that due to the defined limitations of the demonstration, the loads at Franklin and Substation 2 will always be tripped. The Table allows for the calculation of the total value of the Load that will be lost. The preparation for the PVT led to discussion of whether there was a method to include this calculated load in the C90Plus calculations. The use of IEC61850 GOOSE messaging as implemented does not allow for this type of calculation. The future addition of F35 controllers at Substation 2 and Franklin is required. This led to the Shipyard establishing operational procedures whereby they will disable the FLS should the net of utility supplied power be nearly zero or negative. The condition can occur when bad weather is forecast and the probability increases that the utility tie will be lost.

Simulated Test #1

For Simulated Test #1, NAVFAC decided to perform this test with both GTGs running. GTG#1 was loaded to close to its' nameplate rating and GTG#2 was loaded at ~10% of its' nameplate rating. This was a preventative measure should GTG#1 trip off for an unanticipated reason thus assuring at least one GTG would be available to support the Shipyard. The C90Plus FLS Load Shed Order of 1,596kW (see lower left corner of SIM Test #1-Post Test HMI Screen) was required to offset the Utility power that was lost as an Infeed to the Island. This compares favorably to the 1,667 kW calculated for PP/Sub3 Infeeds as shown in Table - SIM Test #1. The actual load to be shed was calculated to be 1,812 kW as shown on the SIM Test #1 Table. This demonstrates the variability of the Shipyard loading.

The FLS did issue shed commands to load breakers 72-21a, 72-5a, 72-25a and 3-6a as shown on the HMI screen and was verified by the Substation personnel located at each Substation. This was as predicted in the Table.

The BESS was not operated during the first simulation.

Simulated Test #2

For Simulated Test #2, the calculations in the Table predicted that none of the Priority loads in the power island would have to be shed. The C90Plus determined that the loss of the Infeed from the Utility did not require any further load shedding in the power island once the load supplied at Substation 2 and Franklin was tripped off. The total load to be shed at these substations was calculated using FLS measured values at 4,296 kW. The FLS System performed exactly as designed.

The Simulated Tests demonstrated that the FLS was able to calculate the proper generation-load balance for the two key Scenarios. This assured PNS Power Operations that the FLS was properly configured and PNS Navy personnel gave the go ahead for Live Testing of the FLS.

The BESS was activated during this test but initially failed to operate. An error in the program was identified, the error was corrected and a second Test #2 was ran with the BESS successfully dispatching.

Live Testing

Live Testing of the FLS was conducted on December 8. The Scenarios tested were essentially the same as those in the Simulated Tests. There were three key purposes of the Live Testing: 1) verify that the Power Plant does not trip off for a Loss of Utility event, 2) verify that the FLS could detect the loss of utility and initiate tripping of the appropriate breakers within 20 milliseconds (ms) and that the overall clearing time was less than 80 ms from detection of the Loss of Utility and 3) verify the capability of the GTGs to continue to support the Shipyard. The original expectation was that the overall clearing time would be less than 140 ms. Subsequently, this was reduced to 80 ms. The verification of the GTG performance was done to establish their ability to function for these scenarios.

Live Test #1

The Summer Scenario was tested first. The Pre-Test data is included in the attached Scenario 1 Table and Pre-Test HMI Screen. The Post-Test data is as shown in the Post-Test HMI Screen. The same loads that were tripped in Simulated Test #1 were once again tripped in the Live Test. The Power Plant stayed on-line and the Diesel-Generators started up and synchronized to support the load restoration. Following the collection of data and verification that each breaker did trip, PNS Operations restored the connection to the Utility and restored power to all tripped loads. The FLS was placed out-of-service during the restoration process. The Test Team then moved on to perform Live Test #2.

Live Test #2

The Winter Scenario was then tested. GTG#2 was started and synchronized on-line with GTG#1. The DCS adjusted the power supplied by the GTGs such that the Utility tie supply was reduced from 5 MW in Test #1 to less than 1 MW. The combined output of the GTGs was clearly sufficient (see Live Test #2 Table) to supply all load in the Power Plant/Substation 3 island.

Demonstration Period Events

February 16, 2016 FLS Event -Subsequent to the Simulated and Live Testing, an unexpected FLS event (load was shed) occurred on February 16, 2016 when one of the Diesel Generators was manually shut down by the Power Plant Operators during a routine cycling. The data collected by the FLS equipment allowed for the quick identification of the cause of the FLS trip. The settings implemented in the C90Plus had incorrectly been set to allow FLS to occur for the tripping of the DG.

The settings were corrected and the FLS was re-tested on March 30, 2016 to verify that the C90Plus would not initiate a Fast Load Shed for this scenario. The Shipyard chose to conduct additional verification testing at that time to assure that the tripping of any of the six loop feeders (the ties between the Power Plant and Substation 2/Franklin and Substation 3 and Franklin) would not result in a FLS event. This testing verified that these normal tripping events would not result in the FLS causing load to be shed. In other words, the security of the scheme was verified. The FLS was place back into service on March 31.

June 16, 2016 FLS Event - On June 16, 2016, the 34.5kV feeder that supplies PNS with utility power experienced a flashover of a line switch. This caused a Loss of Utility event to be detected by the MCS/FLS and the solution acted to shed load. The Shipyard was operating under Summer Load conditions and only GTG#2 was online. A protective relay for this unit detected a failure and caused the sole power source to be tripped off just prior to the FLS acting to shed the necessary loads to keep this unit online. The subsequent analysis of the data collected by PNS revealed that the FLS had shed the correct amount of load and that the Power Plant would have stayed online absent the tripping of the GTG. An unrecognized issue arose with the initiation of waveform capture in each of the F35 Controllers and the capturing of this data at the HMI. The settings in the F35 relays were updated the week of August 22 to remedy this issue. The HMI server was originally to be installed in a GE furnished cabinet with a 4 hour UPS. It was decided to install the server in the Power Plant Operators' control room. The HMI server was not connected to the control room UPS. This connection has been remedied.

July 18, 2016 FLS Event - PNS experienced another LoU event on the morning of July 18. The FLS operated as expected, saving a substantial portion of critical operations on the yard. Coincidentally, the Power Plant Operators were exercising the DGs when the event took place, so in addition to GTG#1 being online, there was also an additional 1.5MW of capacity of emergency generation accounted for by the FLS. Since the DGs were online, the BESS discharge/support was not activated in accordance with the D400 control design.

The issue with the initiation of the waveform retrieval by the HMI remained. As a result, the capture of waveforms for the Power Plant and Substation F35 controllers did not occur. Fortunately, the Franklin F35 did capture the event. A review of the waveforms from the F35 at Franklin Substation was conducted by GE and they revealed that a phase-to-phase fault occurred on the Utility feeder. The fault lasted for about 630ms. The FLS acted to trip the loop feeders and create the power island. Breakers 5, 10 and 11 at Franklin Substation were also tripped as per the design. The FLS preserved the power island by tripping a total of 1,544.9kW of load being served by breakers 72-21A and 72-25A (both at the Power Plant). PNS started GTG#2 and began to pickup additional load and the Utility tie was finally restored 2-1/2 hours after the initiation of the LoU event. The C90Plus Load Shed Summary is attached along with the waveforms from the Franklin F35.

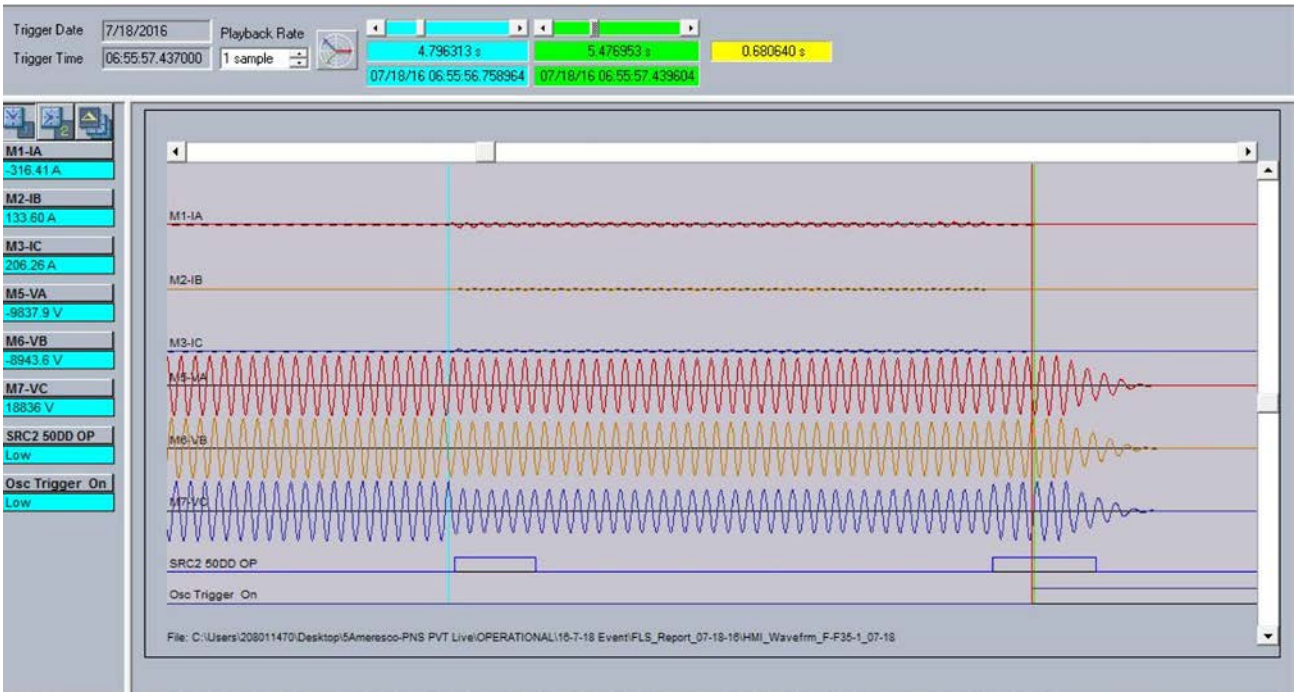

Figure 6-2 F-F35-1 Waveform Capture of July 18, 2016 Loss of Utility Event

The HMI was pre-configured to retrieve data from the Historian and provide an extended display of the Power Plant performance during a Loss of Utility Event. The following System Event display was captured by the PNS Operators for the July 18 Event.

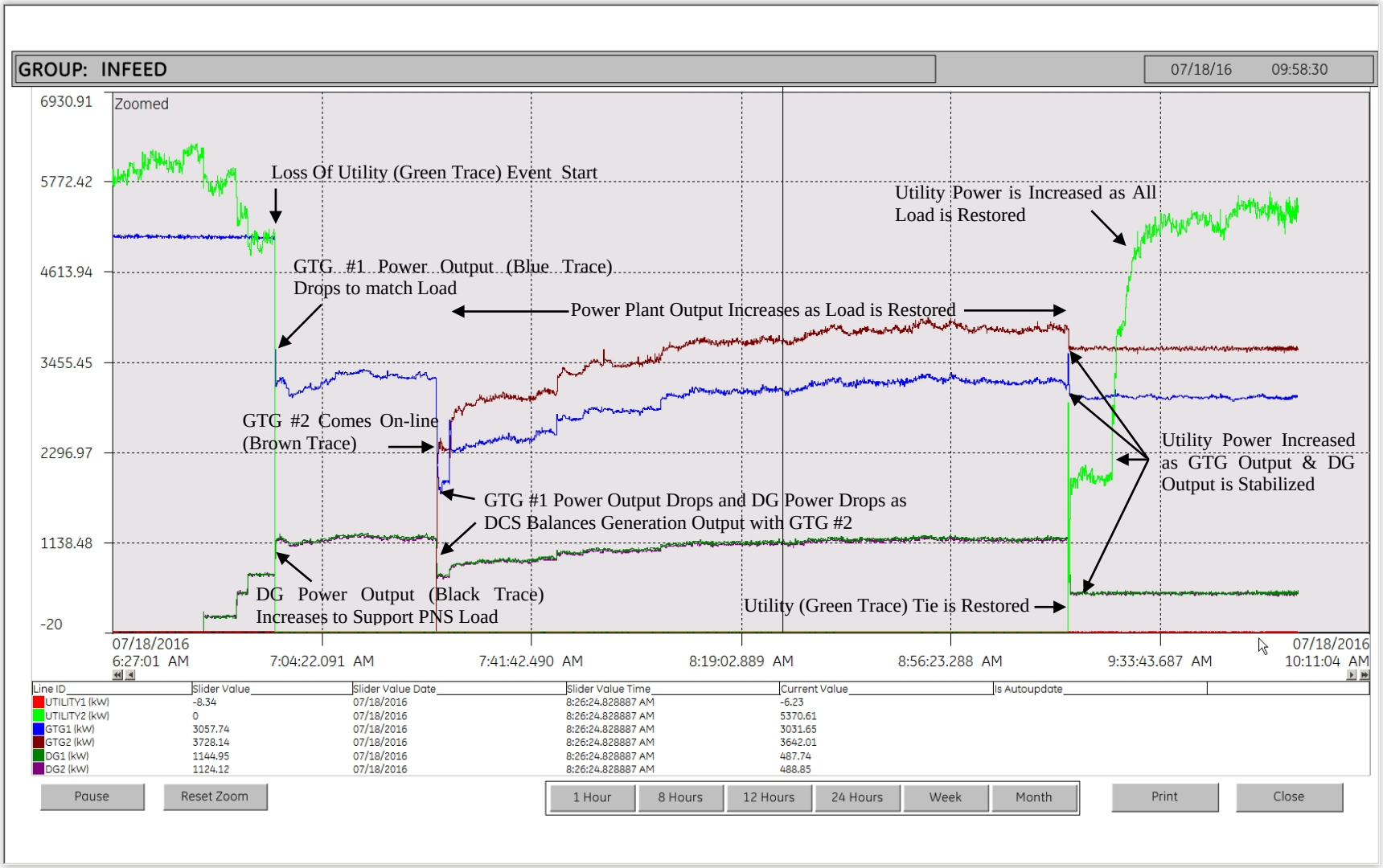

Figure 6-3 HMI Trend Display – July 18

PNS started GTG#2 and began to pick up additional load. The Utility tie was finally restored 2-1/2 hours after the initiation of the LoU event. The C90Plus Load Shed Summary is shown below.

Relay Data	
Relay Name	C90Plus
Firmware Version	1.90
Last Setting Change	Jul 06, 2016 06:10:55
Calculation Mode	Adaptive
Contingency Time Setting	1000 s
Events Enabled	Yes

FLS Report Summary	
Start Date and Time	Jul 18, 2016 05:56:24.773032
Duration	366 s
Total Infeed	7533.6 kW
Total Reserve	0.0 kW
Total Avail Load	7692.6 kW
Total Infeed Lost	1010.1 kW
Total Load Shed Requested	1544.9 kW
Any FLS Comms Trbl	Yes

Infeed Designation	Infeed ID	Lost	Power	Reserve
GTG2	IF3	No	0.1 kW	0.0 kW
GTG1	IF4	No	5059.2 kW	0.0 kW
DG-1	IF5	No	735.5 kW	0.0 kW
DG-2	IF6	No	725.7 kW	0.0 kW
SS72-6A	IF7	Yes	272.6 kW	0.0 kW
SS72-9A	IF8	Yes	-1376.6 kW	0.0 kW
SS72-17A	IF9	Yes	372.0 kW	0.0 kW
SS72-16A	IF10	Yes	-507.6 kW	0.0 kW
SS3-7A	IF11	Yes	1035.6 kW	0.0 kW
SS3-13A	IF12	Yes	1516.1 kW	0.0 kW
BESS	IF32	No	0.0 kW	0.0 kW

Load Group Designation	Load Group ID	Priority	Power	Shed Request
SS72-1A	LG1	2	439.0 kW	No
SS72-2A	LG2	0	730.0 kW	No
SS72-3A	LG3	9	5.2 kW	No
SS72-4A	LG4	5	232.7 kW	No
SS72-5A	LG5	17	0.0 kW	Yes
SS72-7A	LG6	0	0.0 kW	No
SS72-8A	LG7	0	0.0 kW	No
SS72-9A	LG8	0	0.0 kW	No
SS72-16A	LG9	0	0.0 kW	No
SS72-17A	LG10	0	0.0 kW	No
SS72-18A	LG11	0	0.0 kW	No
SS72-21A	LG12	18	104.1 kW	Yes
SS72-23A	LG13	0	751.9 kW	No
SS72-24A	LG14	1	1146.9 kW	No
SS72-25A	LG15	16	1440.5 kW	Yes
SPARE1	LG16	0	0.0 kW	No
SPARE2	LG17	0	0.0 kW	No
SS3-1A	LG18	3	178.3 kW	No
SS3-2A	LG19	7	236.5 kW	No
SS3-3A	LG20	15	12.5 kW	No
SS3-4A	LG21	13	19.4 kW	No
SS3-5A	LG22	14	57.6 kW	No
SS3-6A	LG23	4	15.2 kW	No
SS3-7A	LG24	0	0.0 kW	No
SS3-13A	LG25	0	0.0 kW	No
SS3-14A	LG26	11	147.6 kW	No
SS3-15A	LG27	6	1265.9 kW	No
SS3-16A	LG28	12	435.6 kW	No
SS3-17A	LG29	8	320.5 kW	No
SS3-19A	LG30	10	146.9 kW	No
SSF-5-9-10	LG31	32	0.0 kW	Yes
	LG32	0	0.0 kW	No

Figure 6-4 C90 Plus Load Shed Report – July 18, 2016 LoU Event

October 16, 2016 FLS Event - PNS experienced another LoU event on the afternoon of Sunday, October 16. The FLS operated as expected, however, the Fault was an extended time event resulting in the Tripping of the operating GTG before the FLS coulds act. This event was evaluated by PNS Power Operations and brought home the need to add a Fast Transfer Trip signal when the Utility breaker trips.

The F-F35-1 Controller at Franklin captured the complete event as shown in this waveform. The Fault Event lasted for over 0.9 seconds. `The waveform shows the extended amount of power (SRC 2 P) that flowed into the fault from the PNS System. This waveform also shows the FLS Load Shedding being initiated (F-5 LS Req On) 129 ms after the Franklin breaker had cleared the fault.

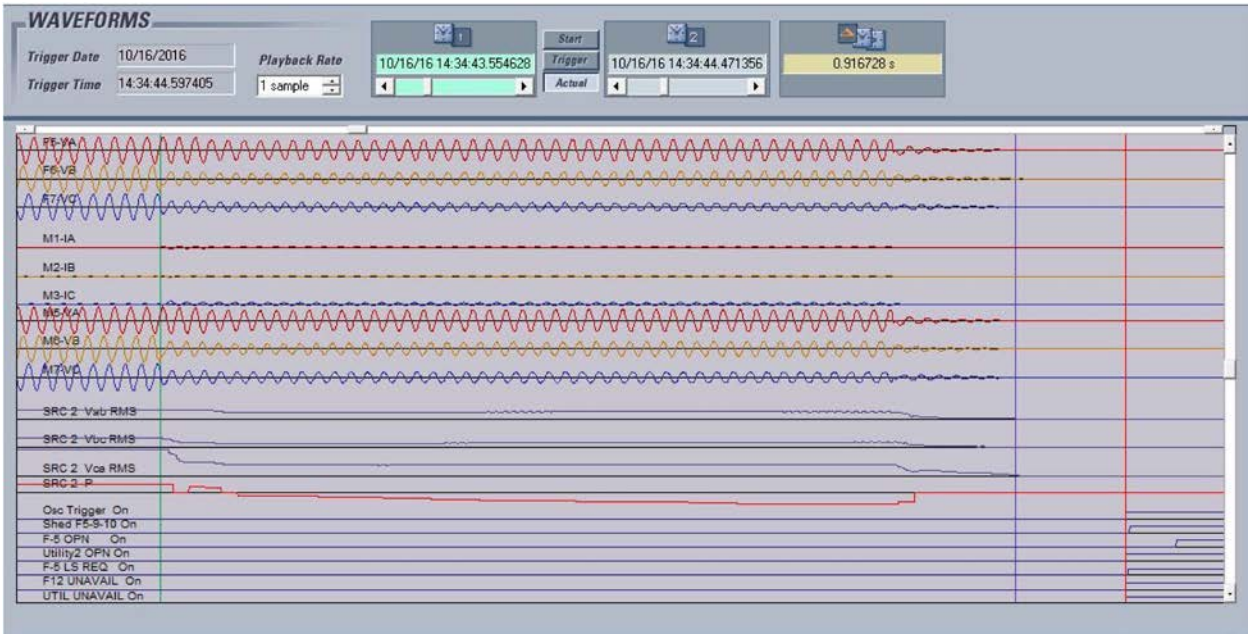

Figure 6-5 F-F35-1 Waveform and Event Capture – October 16, 2016 LoU Event

The Power Plant Controller, 72-F35-2, captured the waveforms and events associated with tripping two Loop Feeders (72-8A and 72-9A) as well as trip of GTG #2. The following waveform shows that GTG #2 tripped 805 milliseconds after the initiation of the fault on the CMP Feeder. It also shows the FLS initiating the Trip of the Loop Feeders 242 ms (delta time between Blue line and Red Line). The Plant DCS acted to trip GTG #2. If this had not occurred, the FLS would have acted to maintain the steady state generation load balance.

The FLS acted to trip the loop feeders and create the power island. Breakers 5, 10 and 11 at Franklin Substation were also tripped as per the design. The FLS acted to preserve the power island by tripping the Loop Feeder breakers. The C90Plus calculated that 1,047.5kW would need to be shed and issued a Load Shed Request for 1,148.6 kW. The C90Plus initiated shedding of load breakers 72-5A, 72-21A, 72-25A, 3-3A, 3-5A and 3-16A. The C90Plus Load Shed Summary is provided below.

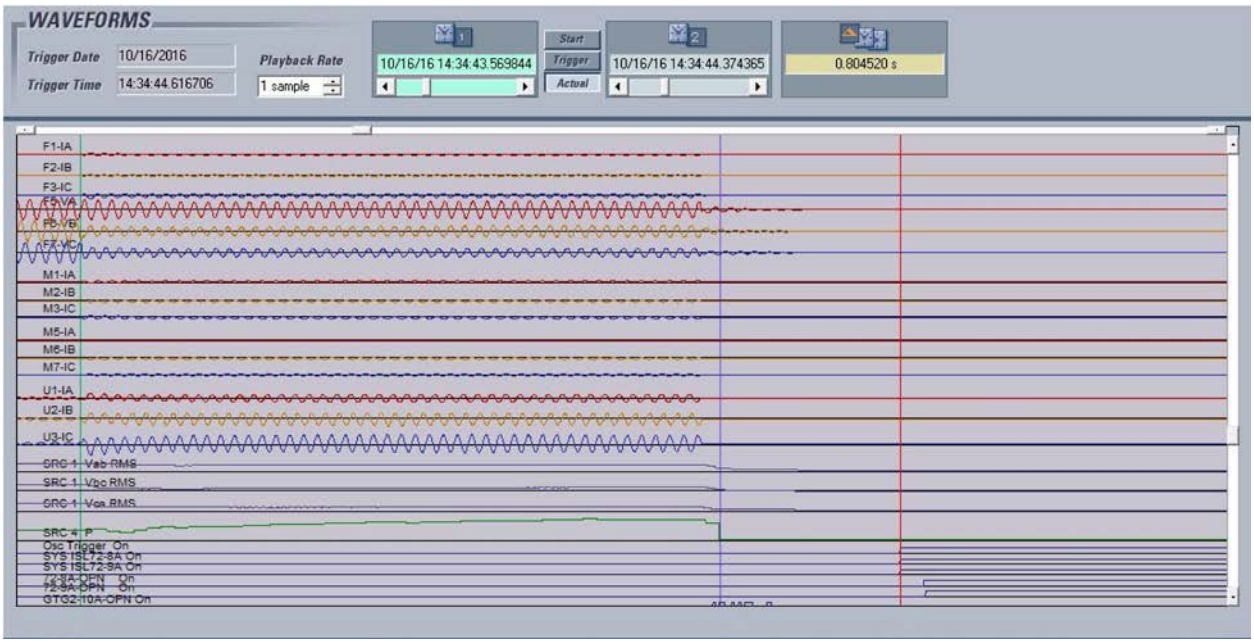

Figure 6-6 F-F35-1 Waveform and Event Capture – October 16, 2016 LoU Event

Relay Data	
Relay Name	C90Plus
Firmware Version	1.90
Last Setting Change	Oct 16, 2016 12:43:59
Calculation Mode	Adaptive
Contingency Time Setting	1000 s
Events Enabled	Yes

FLS Report Summary	
Start Date and Time	Oct 16, 2016 12:33:55.727964
Duration	1000 s
Total Infeed	5093.2 kW
Total Reserve	0.0 kW
Total Avail Load	5121.0 kW
Total Infeed Lost	1047.5 kW
Total Load Shed Requested	1148.6 kW
Any FLS Comms Trbl	Yes

Infeed Designation	Infeed ID	Lost	Power	Reserve
GTG2	IF3	No	4044.7 kW	0.0 kW
GTG1	IF4	No	1.0 kW	0.0 kW
DG-1	IF5	No	0.0 kW	0.0 kW
DG-2	IF6	No	0.0 kW	0.0 kW
SS72-8A	IF7	Yes	143.4 kW	0.0 kW
SS72-9A	IF8	Yes	-962.8 kW	0.0 kW
SS72-17A	IF9	Yes	310.5 kW	0.0 kW
SS72-18A	IF10	Yes	-515.6 kW	0.0 kW
SS3-7A	IF11	Yes	841.5 kW	0.0 kW
SS3-13A	IF12	Yes	1230.5 kW	0.0 kW
BESS	IF32	No	0.0 kW	0.0 kW

Load Group Designation	Load Group ID	Priority	Power	Shed Request
SS72-1A	LG1	2	81.7 kW	No
SS72-2A	LG2	0	274.7 kW	No
SS72-3A	LG3	9	5.1 kW	No
SS72-4A	LG4	5	275.9 kW	No
SS72-5A	LG5	17	0.0 kW	Yes
SS72-7A	LG6	0	0.0 kW	No
SS72-8A	LG7	0	0.0 kW	No
SS72-9A	LG8	0	0.0 kW	No
SS72-16A	LG9	0	0.0 kW	No
SS72-17A	LG10	0	0.0 kW	No
SS72-18A	LG11	0	0.0 kW	No
SS72-21A	LG12	18	60.1 kW	Yes
SS72-23A	LG13	0	748.1 kW	No
SS72-24A	LG14	1	429.1 kW	No
SS72-25A	LG15	16	804.9 kW	Yes
SPARE1	LG16	0	0.0 kW	No
SPARE2	LG17	0	0.0 kW	No
SS3-1A	LG18	3	84.4 kW	No
SS3-2A	LG19	7	240.1 kW	No
SS3-3A	LG20	15	18.3 kW	Yes
SS3-4A	LG21	0	17.3 kW	No
SS3-5A	LG22	14	8.4 kW	Yes
SS3-6A	LG23	4	23.6 kW	No
SS3-7A	LG24	0	0.0 kW	No
SS3-13A	LG25	0	0.0 kW	No
SS3-14A	LG26	11	0.0 kW	No
SS3-15A	LG27	6	1595.9 kW	No
SS3-16A	LG28	12	256.9 kW	Yes
SS3-17A	LG29	8	120.2 kW	No
SS3-19A	LG30	10	76.3 kW	No
SSF-5-9-10	LG31	32	0.0 kW	Yes
	LG32	0	0.0 kW	No

Figure 6-7 C90 Plus Load Shed Report – October 16, 2016 LoU Event

Results for Quantitative Performance Objectives

Energy Security - The SIM Tests and the Live Tests met the performance requirements by successfully islanding the Shipyard. The MCS Fast Load Shed tripped sufficient load to keep the Gas Turbine Generators on-line and maintain a steady state generation – load balance.

Proficiency of MCS to Maintain Generation – Load Balance for Loss of Utility – As expected, the FLS performed flawlessly once the settings were established for the Shipyard. The existence of the multiple Loop feeders at PNS provides a high level of power reliability as more than one loop can trip without any loss of load. However, this configuration required unique settings and control for the C90Plus. The detection of the Loss of Utility was done by monitoring the tripping of the Utility Tie breakers. This is the standard practice at existing installations of the C90Plus.

Normally, the amount of utility power lost would be a key factor in determining which priority loads to shed. In this demonstration the power level supplied by the utility is monitored by the MCS/FLS to provide a complete picture of the PNS system. However, the measurement of the power flows on the Loop feeders tied to the Power Plant and Substation 3 became the key power measurement used to establish which priority loads would be tripped. Further, the MCS/FLS had to trip the Loop feeders to isolate the power island. The ability of the MCS/FLS to accommodate this design demonstrated the flexibility of this technology. The potential for expansion of the MCS/FLS to include Substation 2 and Franklin in the FLS calculations will, in fact, simplify the operation of the scheme and reduce the tripping duty on the Loop feeder breakers.

Demonstration of Fast Load Shedding - The MCS FLS performance surpassed the expected performance criteria. The existing F1 utility tie breaker did not have a spare 'b" contact available to indicate the Loss of Utility. The design added an auxiliary relay into the 'b' contact circuit. This aux relay added a two cycle delay in the detection of Loss of Utility. The FLS acted to issue Shed commands in 3 milli-seconds and the Shipyard was islanded and load shed within 32 to 40 ms of detecting the Loss of Utility. Overall trip time, including the two cycle delay was a maximum of 72 ms. Please refer to Appendix D for the waveforms from Live Test #1.

Annual Avoided Cost of Lost Production - The calculation of the avoided cost requires 1) historical average of the number of outages, 2) average length of the outages and 3) hourly value of lost production. The Shipyard experienced three live events over the demonstration period. Through interview of PWD staff and experience on-site since 2001 we understand the length of outages to be in the range of 30 minutes to 2 hours. The restoration of the Shipyard following each the Live Test was accomplished within one hour. This included time to collect records, verify all substation breakers were in Local Control, loads restored and then re-synchronize to the Utility. See Section 7.0 for further calculations and results.

BESS Participation in Transition to Island Mode - The control of the BESS by the D400 (Steps 4 & 5) was tested in a separate Simulation Test that essentially duplicated a Summer scenario where one GTG was online. The C90Plus initiated the mode change to Microgrid operation and the D400 directed the BESS to ramp up at its' maximum rate to discharge 500kW. The response time for this change was less than 0.5 seconds. This included a 200 ms delay for the BESS Controller to change operation mode to Microgrid Dispatch, another 200 ms for the BESS Controller to execute the D400 commands and 16 ms for the BESS to achieve maximum output. The approximate overall time to achieve maximum BESS discharge output is 416 ms.

The Power Plant DCS detects a Loss of Utility (LoU) in through a separate detection circuit. Following the LoU, the DCS initiates the automatic start-up and synchronization of the two 1.5 MW Diesel Generators. The MCS detects that the Diesel-Generators have come on-line by monitoring the status of their circuit breakers. The D400 then commanded the BESS to reduce output to zero at a gradual rate of change. This allowed the D-Gs to pick-up the load that the BESS was supporting. The BESS Site Controller then returned to its' previous mode of operation.

Another portion of this performance objective was related to participating in the Avoided Cost of Lost Production. The plan was to capture and analyze value of the BESS saving additional loads above what could be carried by the CGTs during an FLS event. This is the function previously noted as a "bridge" where the BESS would hold load until the emergency generators came on-line. Ultimately, we were unsuccessful in getting the GE C90 to properly include this capacity in its calculation. Additional programming and tests would need to be performed to verify if this function is viable to count towards further savings in avoided production costs.

Results for Qualitative Performance Objectives

Ease of Use – The Power Plant Operators have been provided hands-on training in their interface with the MCS/FLS. The HMI screens have undergone a number of changes as the Shipyard has gained experience. Overall, the NAVFAC personnel have come to appreciate the capabilities of the MCS/FLS and have instituted and adjusted the necessary operational controls and procedures. The changes in the HMI have come about as the operators have become more familiar with the system and have requested the simplification and reduction in the number of steps required to enable/disable the system and to shorten these processes.

Operational Value of MCS/FLS – The NAVFAC Power Operation management have become key supporters of this solution and they fully appreciate the fact that they do not have to experience a shutdown/trip of the GTGs following a Loss of Utility event. They have expressed their satisfaction with the solution by moving ahead with the addition of a remote viewer at the Power Operations Building and they have begun to discuss their plans to expand the solution to cover Franklin Substation and Substation 2. NAVFAC personnel also recognize that the F35 Controllers have the capability to provide protection functions that would replace the existing solid state relays.

Transferability of MCS-FLS application to other DoD sites –Ameresco is moving forward to apply the technology at other DoD facilities such as Parris Island and Soto Cano. GE is also actively involved with a ESPC project at Diego Garcia Naval Station. Furthermore Portsmouth Naval Shipyard has released an ESPC to be developed since award of this demonstration and selected Ameresco to perform. This new ESPC will build out the demonstration to include additional generation and extend to the remaining two substations (Franklin, Substation 2).

Page Intentionally Left Blank

7.0 COST ASSESSMENT

The following costing and valuation analysis provides information useful to those who may be considering developing a project similar to this demonstration. Included are the upfront costs to purchase major technology components, design and build the system, and the routine maintenance and fees required to operate the system over its lifetime. Operational value of these systems comes in the form of avoided costs and generation of revenue through participation in ancillary services. Our conclusion is that both technologies offer quantifiable value to a project.

7.1 COST MODEL

Table 7-1A Cost Model for Microgrid Control System with Fast Load Shed

Element	Data Tracked During the Demonstration	Costs
Hardware Capital Costs and Design, Programming, Training	Including: C90, F35s (x8), D400, Server, GPS Clock, Network Switches, Test Switches, UPS units, and Cabinets. See Section 2.1 Included in this purchase is the design and programming necessary to assure a fully operational system crafted specifically to the site, this is a service provided directly by the hardware vendor.	$ 965,658
Engineering & Design	Installation Design focused on the mechanical, electrical, and civil engineering trades. The integration of the Microgrid Control System and Fast Loadshed System for this demonstration, as in many cases with other DoD facilities, includes retrofitting components into an existing electrical distribution system. Including in-depth review of existing electrical drawings and operating procedures.	$ 172,913
Installation costs	Labor and materials required to install the system per the Installation Design drawings. This includes substantial wire pulls within the medium voltage electrical breaker lineups. It should be noted that there is potential in the future to utilize fiber optic conversation routers to be housed at each breaker housing and then fiber optic run back to the MCS/FLS control cabinets. This will greatly reduce the volume of copper wire needed and the labor to pull that wire.	$ 180,985
Project Management & Overhead	We included in this estimate the cost for Project Management to coordinate the design, submittals, scheduling, installation, commissioning, and training for the system. Working with the government, one should expect the facility personnel to be very engaged through the process, requiring a high level of coordination and review through each step of the project from design to commissioning. Note: A demonstration project requires additional milestones and data collection/analysis which other projects may not require.	$ 250,000
Maintenance	An annual service agreement is recommended to be purchased with the MCS/FLS vendor to provide phone support and two visits to site per year. Maintenance should include control cabinet inspections, dusting of equipment, UPS maintenance, and firmware/software updates.	$ 28,000/yr
Hardware lifetime	Industrial based electronics and software packages should be expected to be supported by vendors past a number of generation updates of their technology. Thought the hardware may be capable of lasting longer than 20yrs, there will be a point in time when the vendor will no longer provide support for components for earlier product lines.	20yrs
Total Upfront Cost	Not Including Annual Maintenance	$ 1,569,556

* Pricing above is based on a system primarily designed to perform FLS on up to 30 medium voltage circuits, which is a representation of a system of a high complexity for a government facility. We would expect many facilities to require half or even a quarter of this many circuits. The estimator should keep in mind that utilizing the MCS for control of Distributed Generation Resources (DERs) was not part of this scope and carries a high cost to implement not included in this project.

Table 7-1B Cost Model for Battery Energy Storage System (BESS)

BESS Cost Element	Data Tracked During the Demonstration	Estimated Costs
Hardware Capital Costs and Training	Including: Batteries, Enclosure, Power Conversion System, and Controls. It must be noted that our cost estimates for if this system were built today are dramatically lower. This is due in part to manufacturer selection, as cost for systems vary across competitors. There has also been a downward trend in system costs across the Li-Ion battery market year over year in the range of 15%/yr.	(2013) $ 1,043,910 (Present) $ 365,252
Engineering, Design, Permitting	Installation Design focused on the mechanical, electrical, and civil engineering trades. The integration of a BESS for this demonstration, and as in many cases with other DoD facilities, includes retrofitting components into an existing electrical distribution system.	$ 167,571
Installation costs	Labor and material required to install the system per the Installation Design drawings. This includes any demolition necessary, forming of pads, conduit runs, and cable. It must be noted that for this specific project, we had access to an existing breaker which would otherwise need to be accounted for. Also, we were able to utilize sub-contractors who were already on-site which substantially reduced electrical and civil installation tasks.	$ 78,905
Project Management & Overhead	We included in this estimate the cost for Project Management to coordinate the design, submittals, scheduling, installation, commissioning, and training for the system. When working with the government, one should expect the facility personnel to be very engaged through the process, requiring a high level of coordination and review through each step of the project from design through commissioning. Note: A demonstration project requires additional milestones and data collection/analysis which other projects may not require.	$ 150,000
Battery Regen @ Yr 11	Li-Ion battery technology has a long life expectancy in the 20yr range, however this is heavily dependent on the number of charge/discharge cycles performed over the life of the system. For providing Frequency Regulation, as this project was intended for, we expect that life span to drop to around 10yrs for the cell chemistry. Since the rest of the BESS components still have a 20yr life it is economically wise to invest money in replacing the battery cells. As can be seen in the graphs in Section 7.3, the economic life and value of the investment is dramatically increased in performing this added Regen cost. Cost for Regen was not included in this demonstration.	(2013) $ 417,564 (Present) $ 146,101
Facility Operational Costs	Fee to ISO-NE to provide MPLS connection in order to participate in Reg Market	$ 400/mo
Maintenance	BESS components require very little annual maintenance, the costs in this line item are associated mostly with annual inspection.	$ 5,000/yr
Hardware lifetime	Assuming Battery Regen is performed.	20 Years
Total Upfront Cost	Not Including Annual Maintenance or Regen	$ 1,440,386

* Pricing above is for a 500kW/500kWh system. In terms of scalability, our market experience is that the cost to capacity curve is linear up to multi MW/MWh systems. This pricing does not apply to utility scale projects in the 10s of MW scale.

7.2 COST DRIVERS

Battery technology costs are on a downward trend with the market seeing on average a 15% reduction year over year. Over the demonstration period of this project, we confirmed this trend. Our analysis covered in the following Section 7.3 goes into detail on our findings. The outcome is that projects which may have not been feasible only 3 years ago may now be viable thanks to the reduced cost in both Li-ion chemistry and power conversion systems. When looking at revenue opportunities, the availability of an ancillary services market for a system to participate in should also be considered. As of today there are a number of markets in development or already operating, with the most mature being in PJM, ISO-NE, and CAISO. Other regions in development and should be looked at are NY-ISO, ERCOT, and MISO. See Figure 3-1 in Section 3.0.

7.3 COST ANALYSIS AND COMPARISON

The following steps in performing the LCC analysis were taken from the NIST 135 Handbook…

PART I: TABLES FOR FEDERAL LIFE-CYCLE COST ANALYSIS

Single Present Value and Uniform Present Value Factors for Non-Fuel Costs

Table A-1 *presents the single present value (SPV) factors for finding the present value of future non-fuel, non-annually recurring costs, such as repair and replacement costs and salvage values. The formula for finding the present value (P) of a future cost occurring in year t (Ct) is the following:*

$$P = C_t \times \frac{1}{(1+d)^t} = C_t \times SPV_t,$$ *where d = discount rate, and*

t = number of time periods (years) between the present time and the time the cost is incurred.

Table A-2 *presents uniform present value (UPV) factors for finding the present value of future non-fuel costs recurring annually, such as routine maintenance costs. The formula for finding the present value (P) of an annually recurring uniform cost (A) is the following:*

$$P = A \times \frac{(1+d)^N - 1}{d(1+d)^N} = A \times UPV_N,$$ *where d = discount rate, and*

N = number of time periods (years) over which A recurs.

UPV (FEMP): To compute the present value of an annually recurring maintenance cost for a renewable energy system over 20 years, go to Table A-2, find the 3.0 % UPV factor for 20 years (14.88), and multiply the factor by the annual maintenance cost as of the base date.

NIST Handbook 135

Table A-1. SPV factors for finding the present value of future single costs (non-fuel)

Number of years from base date	Single Present Value (SPV) Factors: DOE Discount rate 3.0 %	OMB Discount Rates[a] Short term[b] -0.4 %	OMB Discount Rates[a] Long Term[c] 1.1 %
0.25	0.993	1.001	0.997
0.50	0.985	1.002	0.995
0.75	0.978	1.003	0.992
1	0.971	1.004	0.989
2	0.943	1.008	0.978
3	0.915	1.012	0.968
4	0.888	1.016	0.957
5	0.863	1.020	0.947
6	0.837	1.024	0.936
7	0.813	1.028	0.926
8	0.789	1.033	0.916
9	0.766	1.037	0.906
10	0.744	1.041	0.896
11	0.722		0.887
12	0.701		0.877
13	0.681		0.867
14	0.661		0.858
15	0.642		0.849
16	0.623		0.839
17	0.605		0.830
18	0.587		0.821
19	0.570		0.812
20	0.554		0.803
21	0.538		0.795
22	0.522		0.786
23	0.507		0.778
24	0.492		0.769
25	0.478		0.761
26	0.464		0.752
27	0.450		0.744
28	0.437		0.736
29	0.424		0.728
30	0.412		0.720

[a]OMB discount rates as of April 2013.
[b]Short-term discount rate based on OMB discount rate for 7-year study period.
[c]Long-term discount rate based on OMB discount rate for 30-year study period.

Table A-2. UPV factors for finding the present value of annually recurring uniform costs (non-fuel)

	Uniform Present Value (UPV) Factors		
Number of years from base date	DOE Discount rate 3.0 %	OMB Discount Rates[a] Short term[b] -0.4 %	Long Term[c] 1.1 %
1	0.97	1.00	0.99
2	1.91	2.01	1.97
3	2.83	3.02	2.94
4	3.72	4.04	3.89
5	4.58	5.06	4.84
6	5.42	6.08	5.78
7	6.23	7.11	6.70
8	7.02	8.15	7.62
9	7.79	9.18	8.52
10	8.53	10.22	9.42
11	9.25		10.31
12	9.95		11.18
13	10.63		12.05
14	11.30		12.91
15	11.94		13.76
16	12.56		14.60
17	13.17		15.43
18	13.75		16.25
19	14.32		17.06
20	14.88		17.87
21	15.42		18.66
22	15.94		19.45
23	16.44		20.22
24	16.94		20.99
25	17.41		21.75
26	17.88		22.51
27	18.33		23.25
28	18.76		23.99
29	19.19		24.71
30	19.60		25.43

[a]OMB discount rates as of April 2013.
[b]Short-term discount rate based on OMB discount rate for 7-year study period.
[c]Long-term discount rate based on OMB discount rate for 30-year study period.

Annual Supplement to NIST Handbook 135 (2013) http://dx.doi.org/10.6028/NIST.IR.85-3273-28

The following calculations represent Present value (P) using the methods previously described in the NIST 135 Handbook. The "Calculated" values were performed in excel using the two equations as seen below. The "From Table" values are used for proofing the equations and utilize Tables A-1 and A-2 taken from the NIST 135 Handbook. By bringing all the associated costs and revenue to Present value, we can make a comparison to the initial costs of the system.

Figure 7-1 and Figure 7-2 on the following pages graphically demonstrate the calculations and show the breakeven point on the upfront investment.

$$P = A \times \frac{(1+d)^N - 1}{d(1+d)^N} = A \times UPV_N, \qquad P = C_t \times \frac{1}{(1+d)^t} = C_t \times SPV_t,$$

Values at time of Demonstration (2013)

P_Initial Cost	$(1,440,386)	
	Calculated	From Table
P_maint	$(74,387)	$(74,400)
P_revenue	$1,487,747	$1,488,000
P_regen	$(216,726)	$(223,200)
P_sum	$1,196,634	
P_variance	$(243,752)	

Total costs versus revenue over the 20-year life of the system resulted in a variance of $(243,752) in the negative and a breakeven point out past year 20, indicating that this project was not economically feasible at the time of initial investment. However, since the award of this demonstration (2013) battery system components have come down dramatically in cost. This is due to a number of factors but the two primary drivers have been related to an increase in competition with a wider choice of manufacturers entering the market as well as an increase in economies of scale in manufacturing.

There are multiple sources of information which project on average a 15% cost reduction year over year for battery systems. Our findings support this projection. The following calculations represent Present value (P_n) for a system procured in 2017 with the same maintenance and market revenue assumed.

Values at Present (2017)

P_n_Initial Cost	$(761,728)	
	Calculated	From Table
P_maint	$(74,387)	$(74,400)
P_revenue	$1,487,747	$1,488,000
P_n_regen	$(109,158)	$(112,419)
P_n_sum	$1,304,158	
P_n_variance	$542,474	

Total costs versus revenue over the 20-year life of this system resulted in a variance of $542,474 in the positive and a breakeven point at the end of year 9, indicating that this project is in fact economically feasible in present conditions.

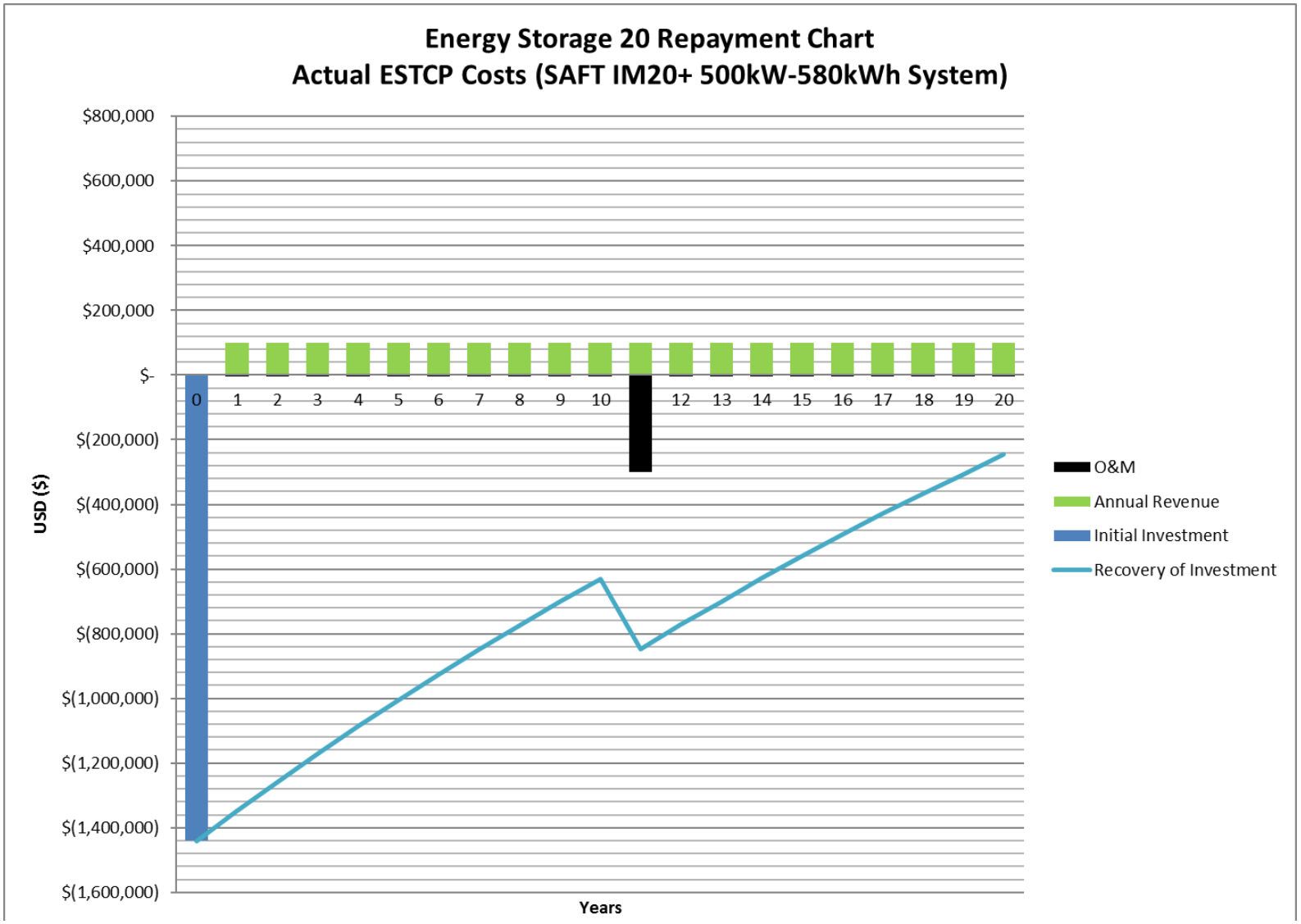

Figure 7-1 20 Year Economics of the 500kW-580kWh Saft IM20+ Battery Energy Storage System Participating in ISO-NE Regulation

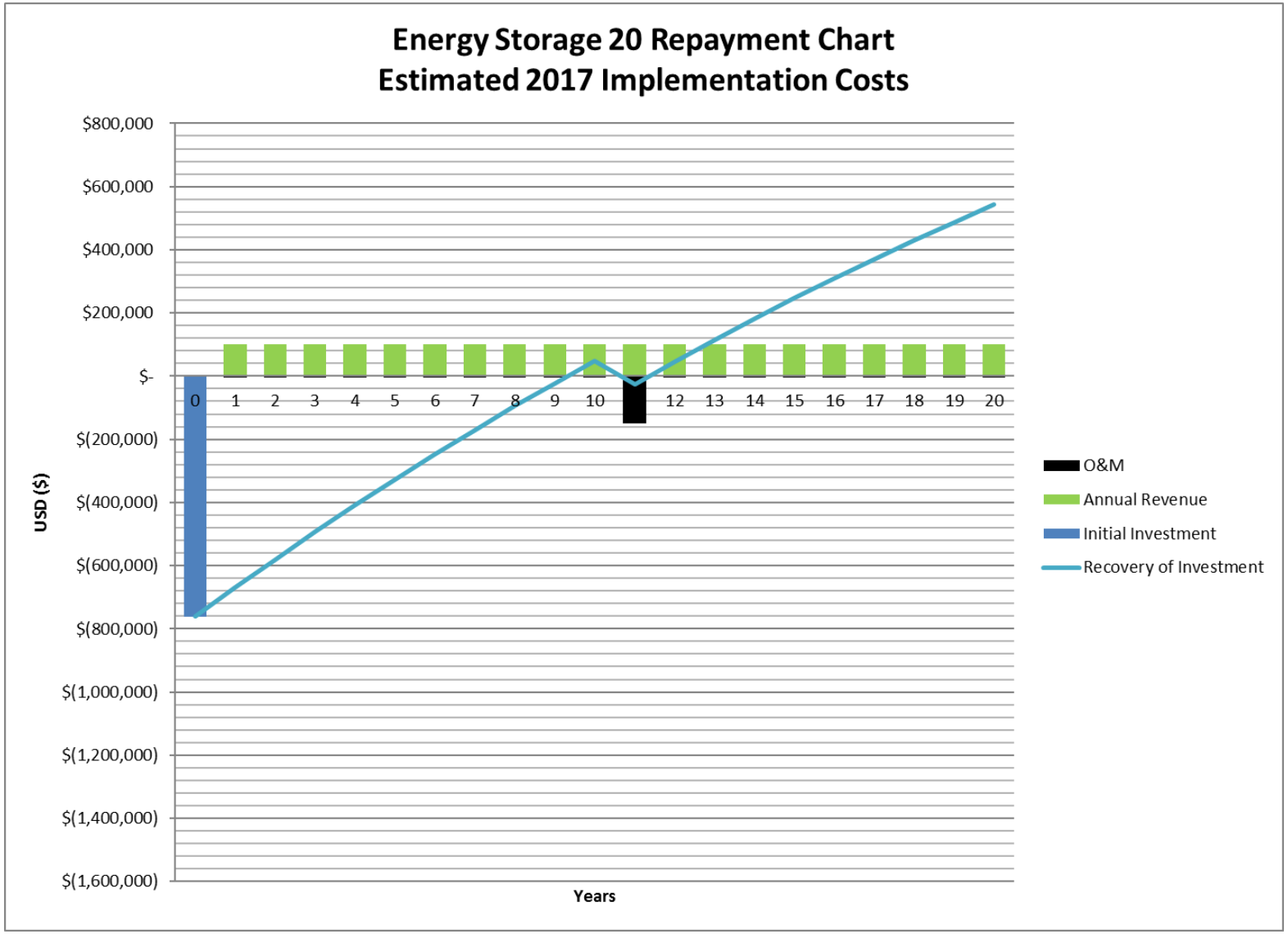

Figure 7-2 Expected 20Yr Economics of a 500kW/500kWh BESS with 2017 Equipment Pricing Participating in ISO-NE Regulation

Calculating Market Revenue (P_revenue)

Ameresco estimated annual revenue that can be received as payment for participation in the ISO-NE Regulation Ancillary Services market. To determine this estimated revenue, Ameresco conducted its own research into the ISO-NE market including analysis of multiple years of actual historical clearing price data and also utilized a third-party consulting service to conduct their analysis of the market. It should be noted, however, that this market is a merchant market and as such the actual revenue garnered is variable from year to year, and that there is a certain level of uncertainty with respect to Ameresco's revenue estimates since this is a newly emerging market.

Through our research, Ameresco assumed an average hourly Regulation Capacity Clearing Price of $25.00/MWh. Ameresco assumed an annual hourly participation of 8,000 hours. It is noted that the newly established minimum capacity for participation eligibility is 1,000 kW, however for the sake of example for this project an assumed participation capacity of 500kW is used to calculate the annual revenue estimate as:

$$\begin{aligned} &Annual\ Regulation\ Revenue \\ &\quad = Average\ Hourly\ Reg\ Payment * Annual\ Hours\ of\ Service \\ &\quad * Capacity\ Provided = \left(\frac{\$25.00}{MWh}\right) * \left(8000\,\frac{hours}{year}\right) * (0.5MW) = \frac{\$100{,}000}{year} \end{aligned}$$

Annual Avoided Cost of Lost Production

During this demonstration we took into consideration what the value may be in the avoided down-time realized in maintaining priority loads during a Loss of Utility (LoU) through implementation of the Fast Load Shed (FLS) system. Through interview with the PWD staff and our own personal experience in being on-site at Portsmouth Naval Shipyard since 2001, we know that the facility on average experiences an LoU two to three times per year. Over the demonstration period we captured three LoU events, confirming this average. Pre-existing to the implementation of FLS, the facility would experience a base-wide blackout during an LoU. This was due to an imbalance between a greater number of loads versus available on-site generation capacity. The overload resulted in the Gas Turbine Generators (GTGs) tripping off-line. Blackouts can have ranged anywhere from no less than 30 minutes up to 2 hours until the GTGs are re-started and power to priority loads is restored. With the FLS activated, we can eliminate this black-out period by matching the number of priority loads to be saved to the available on-site generation capacity.

Though the Navy does not budget for down-time in production, we learned from PWD staff that a good estimate is a cost of $100,000/hr. Assuming an event lasts on average one hour with the total facility load on average being 15MW, we can estimate an average cost per MW ($/MW) for the value of generation in relation to production cost.

$$Production\ Cost\ per\ MW = \frac{\left(\frac{\$100{,}000}{1hr}\right)}{15MW_{load}} = \$6{,}666/\mathrm{MW}$$

The FLS is capable of saving between 5MW and 10MW of priority loads depending on the number of GTGs operating at time of LoU. Two typical modes of operation exist, first being Summer with one GTG (5MW) online, and the second being Winter with two GTGs (10MW) online. Assuming each generator is running at full capacity, which is typical operation, we performed two additional calculations to come to a total Lost Opportunity Cost (LOC) per event at the time of an LoU.

$LOC_{Summer} = \$6{,}666 \text{ x } 5\text{MW} = \$33{,}000$ $\qquad$ $LOC_{Winter} = \$6{,}666 \text{ x } 10\text{MW} = \$66{,}000$

*Note that one of the performance objectives was to capture and analyze value of the BESS saving additional loads above what could be carried by the CGTs. This is the function previously noted as a "bridge" where the BESS would hold load until the emergency generators came on-line. Ultimately we were unsuccessful in getting the GE C90 to properly include this capacity in its calculation. Additional programming and tests would need to be performed to verify if this function is viable to count towards the LOC.

During the demonstration, we captured two LOC_{Summer} events and one LOC_{Winter} event, which resulted in an Annual Avoided Cost (AAC) of *$132,000*. Dividing the combined implementation costs found in Table 2.A by the ACC, we can now estimate a simple payback on the investment.

$$Simple\ Payback = \frac{\$1{,}569{,}556}{(\$33{,}000\ x\ 2)+(\$66{,}000\ x\ 1)} = 11.89 \text{ Years}$$

The result is a 12 year payback on the system and in theory this is an attractive savings. However it must be realized that a Lost Opportunity Cost is not a value that most if any government facility takes into consideration today when budgeting for its operations. As an energy services company (ESCO) providing energy savings performance contracts (ESPCs) to the Federal government it is Ameresco's experience that costs of this nature are not presently identified under the list of approved energy conservation measures (ECMs).

With that said, in review of the positive outcome from the above results, we would certainly be open to further discussions regarding the future potential of the government opening up LOC as a potential ECM to be added to an ESPC. The potential to apply such cost savings to other facilities is very real and with a broad application. Most any facility which serves a daily operational duty could benefit from deferring a disruption in its function during an emergency power outage and having the opportunity to include this in an ESPC could provide means to fund implementation of the technology.

Furthermore the implementation of technologies of this nature provide a greater yet intangible value above LOC in the form of increasing national security which can ultimately avoid casualties in the form of both government property and lives during times of crisis.

8.0 IMPLEMENTATION ISSUES

Battery Manufacturers: One challenge in bringing our demonstration from concept to activation was procurement of the grid-tied battery. Over the development phase, we witnessed battery companies, some of whom we sourced pricing proposals from for this project, go through substantial changes. From bankruptcy and plant closures, to limited component availability and redesign of systems resulting in extended product lead-times.

With each manufacturer offering a unique design and battery chemistry our task was even more challenging as a change in manufacturer meant revision to our installation design as well as electrical and communication specifications.

After re-visiting a number of manufacturer proposals settled on procuring a battery from Saft. The battery is from their Intensium Max product line. The IM20 is comprised of eleven (11) Li-ion modules equaling 580kWh of energy storage capacity, populated within a shipping container, providing power to run a 500kW bi-directional inverter.

Previously we were working to partner with GE Transporation to procure a battery from their Durathon Sodium-Nickel product line and in our original proposal to ESTCP we had been looking to partner with A123 to provide a Li-ion battery. We also considered an advanced lead-acid battery from Xtreme Power.

The decision to go with Saft was based on shorter lead-times, an installation design closer to the original A123 proposal, and more competitive pricing in $/kW compared to competitors. The $/kW offered by Saft was in line with A123's pricing and gave us the ability to meet our original 500kW proposed output where with the GE Durathon we would have needed to de-rate the system to 250kW.

Though the change in batteries set us back in finalizing our sub-contracts, we stayed on target in meeting our installation dates and within the budget set aside in the grant.

Battery Location and Installation: Another particular challenge we faced was determining a final location for the BESS. Choosing a place for the battery proved to be troublesome due to the weight, dimensions, and mounting requirements of the integrated shipping container. Originally the project had intended an exterior installation but due to limited appropriate space around the perimeter of the Power Plant, as well as neighboring construction in progress, this proved to be a substantial obstacle. We decided on an indoor location as an alternate which added some technical requirements such as Structural Analysis of the decking, Elevation Clearances, and Heat Load Calculations (See Appendix H). All of which were completed and received NAVFAC's record of review and approval. An indoor installation proved to introduce complications, some which were anticipated and some which were not. One of the more difficult obstacles was devising a plan to crane the battery container into the building. A few weeks were lost in coming to an agreement on a final plan for installing the battery which resulted in an equal delay in commencing with the preparatory phase of installation. Ultimately the hurdles were overcome with an end result of a successful installation which the Navy is satisfied with.

BESS Communications Integration

Saft IM20 and Dynapower BESS Site Controller: A number of challenges presented themselves during integration of the communication devices between the Saft IM20 and Dynapower Site Controller. To date, these two devices had never been programmed for integration, so it was our task to bring both parties together to understand the operating requirements of each manufacturer's design. One challenge is that Saft's system is programmed in CANBUS where as Dynapower and GE are using Modbus so conversion within the Site Controller was necessary and proved to be a programming challenge which took multiple weeks and a return trip by the programmer to get the systems to operate as intended. In addition, Dynapower worked with Ameresco and Saft to develop a Battery Charge Management program which took advantage of ISO-NE's "trinary" signal by biasing the battery charge/discharge in order to prevent fading. Low SOC cut-out protection was also written and included in the software update.

BESS Site Controller and ISO-NE Network: Also, during ISO-NE Circuit Testing it was identified that the Site Controller was not reporting Reg High/Low Limits as expected. Dynapower and SGC Engineering worked with Ameresco to better understand the ISO-NE communication register, which operates on yet another protocol known as DNP3 which is converted into Modbus via an RTU housed within the Site Controller cabinet.

BESS Site Controller and GE MCS/FLS: During integration of the BESS Site Controller communications into the GE MCS/FLS system, we experienced challenges here as well. The challenge was rooted in the fact this was the first time GE had worked to integrate with these two specific manufacturers and also as we understand the first time our GE team had integrated a BESS into an FLS schema. The result was that during PVT in December 2015, the BESS was only partially operational. Testing proved that the unit could operate as a "buffer" however additional programming in the C90 controller was necessary in order to operate as a "bridge". *(Please review Sections 2.2 and 6.0 with further explanation of the "buffer" and "bridge" functions)* After some additional programming by GE we received clearance by NAVFAC to perform another round of PVT in December of 2016 however after performing the test and reviewing the post-test data it was determined that the C90 failed to operate the BESS as a "Bridge". The programming error has been identified and the change has been determined to be set aside until a second phase build-out of the microgrid kicks off under Ameresco's ESPC development at Portsmouth and Norfolk shipyards. It is still inconclusive if the BESS is indeed fast enough to respond in concert with the FLS to act as a "Bridge" and carry additional critical loads until additional generation can be brought online. The size of the BESS being 500kW on a 12+MW load makes it difficult to capture if indeed an additional priority load was saved during testing, however we are certain that the FLS calculation did not take it into account as intended. Take-away is that further development is necessary to implement BESS technology as a "Bridge" in microgrids such as this demonstration set out to prove.

Despite these challenges, overall the host site has been pleased with the operational outcome of the FLS and the BESS "Buffer" thus in turn the system has been left operational and is planned to stay activated going forward. We also look forward to performing turn-over and acceptance of the system to the Navy, as it is our understanding that the host site is interested in taking over ownership and operation of the system.

Lessons learned, Ameresco has decided in future projects to source an integrated package from a single vendor when at all possible. There may be opportunity to procure separate systems at a lower price, however the task of bringing multiple parties together on-site or at a select manufacturer's testing facility is a logistical task which must be considered as an added cost.

BESS Reliability / Quality Control

See Appendix K for a complete list of Saft IM20 Warranty Issues to date.

Since installation of the IM20 container in June of 2014 Saft has returned to site to correct a number of component failures including two battery modules which had been identified as having failed cells, and also replacement of all 280 Safety Monitoring Units (SMUs) due to a factory recall identifying a redundant failure of circuitry on multiple IM20 units manufactured within the same time period as the one for this demonstration. We also experienced a failure of the main DC disconnect switch on the battery container, Saft was able to get this covered under warranty with ABB as well. In 2016 we experienced a number of additional component failures on the IM20 unit which prevented us from testing the BESS in sequence with some additional FLS testing in August. The failures were rooted in multiple fire suppression sensors going into trouble as well as half of the shunt trip breakers (5 out of 10) on the battery strings failing. Both issues prevented the system from being operated safely and in turn the unit was left off-line for approximately 2 months. After many hours of troubleshooting, identifying corrective actions, and two site visits Saft was successful in remedying the issues.

Saft has corrected every issue to date under warranty, which is commendable, however Ameresco and NAVFAC share some reservation on the future operational reliability of the unit. In order to assure ongoing reliability of the system, it has been determined that Saft would need to return to PNS to perform at the least a baseline state of health test on the battery cells as well as a thorough visual inspection of internal circuitry. Pending outcome of the testing and inspection, we see potential for additional maintenance or corrective repairs.

When weighing the costs to bring the system into good operating condition and ongoing annual maintenance against the benefits the BESS could provide post demonstration, it has been agreed by Ameresco and the host site that the potential costs outweigh the benefit. This is largely in part due to the unavailability of the BESS to continue participation in the ISO-NE regulation market due to the 500kW max capacity of our unit falling below the 1MW minimum capacity set by ISO-NE. This change in the market participation rules went into effect at the end of the Pilot program for which the demonstration was set up to run.

Battery Fire Suppression System Certification: We learned that the Navy required additional inspection and acceptance of the Battery Fire Suppression System than what was provided with the Saft container and what we had accounted for. The PNS Fire Department set forth requirements the system must meet under NFPA 2001 and NFPA 72 (See Appendix J). Though Saft's system satisfied the majority of requirements there were a couple tests outstanding not previously performed at the Saft factory. This included an "Enclosure Integrity Test" and "Discharge Pipe Integrity Test". Ameresco hired a 3rd party Fire Protection testing company to perform the checks onsite. Out of this inspection there was a smoke sensor deficiency identified pertaining to the interface between sensors and overhead air plenum.

Saft spent several visits onsite to satisfy the Navy Fire Protection Engineers request for smoke detectors meeting the NFPA code, modifications were performed to the overhead plenum within the battery container and after re-inspection the Navy FPE accepted the Fire Suppression System.

Regulation Market Rules: With the move to deregulate the electric utility market beginning in 1999, opportunities have developed in various regions of the U.S. for end users to participate in ancillary services such as Demand Response and Frequency Regulation. With the utilization of battery storage steadily increasing, and the support of FERC, ISO New England developed a pilot program creating a trial period for the technology to participate in Frequency Regulation. ISO-NE's pilot was originally scheduled to expire on Oct. 1st 2014, which aligned well with our planned demonstration period. At that point participants in the Pilot were to be required to comply with the new rules, under FERC Order 755, or discontinue service. The largest challenge in ISO-NE's new program was meeting a 1MW minimum participation capacity (our project is 500kW). In Q1 of 2014 we received notice from ISO-NE that the transition date was being accelerated to May 21st, 2014. Ameresco pursued an extension on the 1MW requirement to the original date of Oct 1st 2014, which we obtained, and proceeded with meeting the additional requirements necessary to participate in the Regulation Market. On May 15th ISO-NE announced that the transition would be delayed due to FERC rejecting the new rules filing, and that the Pilot program would continue operation until March 31st of 2015. After this date all fast response units were to exit the Pilot program and be required to meet the new 1MW requirement.

Interconnection Agreement: Unfortunately, we were unsuccessful in obtaining an Interconnection Agreement in time as required by ISO-NE in order to participate in the Regulation market. In February of 2014 Central Maine Power, the public utility, issued an IA for signing at which point on April 2nd of 2014 the Navy responded to CMP with request to changes in the Terms & Conditions. This request for changes would have put us into a 45+ day petition process with the Maine Public Utilities Commission for review and consideration for approval of changes to the Indemnity clause. Fortunately, the Navy weighed the size of this project (500kW) against the legal trouble to go through the petition process and decided to accept the T&Cs as they were originally worded. Despite this decision, the final signing of the Interconnection Agreement by the Navy did not take place until August of 2014. At this point we were optimistic that we would have approval to proceed with the demonstration from September of 2014 through March of 2015, giving us 7 months of run time in the market. Following this signing we learned from the Navy that they had discovered in the process that the government's master service agreement (N40085-15-F-7703, see Appendix F) to procure electricity from Central Maine Power had expired. This diverted us into an administrative contracting que to update the master contract terms and add a MOD to include operation of the BESS at PNS. To our dismay this process was extremely slow and ultimately resulted in the passing of the expiration of the Pilot program on March 31st 2015 with a contract finally being signed and executed in May of 2015.

From this point Ameresco then explored alternatives to bring the BESS up to the new Regulation market rules before completion of the ESTCP demonstration period for the FLS which was set for completion in December of 2016. One option we explored was to work with Customized Energy Solutions (CES) to aggregate the 500kW BESS at PNS with other fast response resources within the ISO-NE territory in order to get us up to the 1MW minimum bid capacity. This would include locating another participant site and setting up necessary telemetry/ hardware/ programming.

We met with CES and refined a Scope of Work identifying division of responsibilities in implementation and operation of the system for the duration of the demonstration along with associated costs. Ultimately our efforts did not identify another host site which was ready to activate a system within the timeframe we had for the demonstration period.

Another option Ameresco considered was to increase the size of the BESS at PNS to 1MW. After weighing the cost and logistics to develop and install additional capacity, we determined that this was not an option the host site was interested in at that time. In the same timeframe of considering options, Ameresco learned that PNS was in the process of assembling a request to the Navy to solicit a new Energy Saving Performance Contract for the facility. Our team saw this as an ideal opportunity to expand the BESS under that future contract. In early 2016 Ameresco was given notice that we have been selected to develop the ESPC for PNS, we are now looking forward to expanding upon the BESS in that project and re-visit participation in the ISO-NE Regulation Market.

MCS/FLS Testing and Operation: During Performance Verification Testing (PVT) in December of 2015 we uncovered a number of errors in settings and programming within the GE hardware, namely the F35s, C90, and D400. Even though the majority of commissioning had already been performed, there were certain operations of the system which could not be tested until the PVT, simply because some functions required activation and triggering of the FLS. Due to the extreme sensitivity of the Portsmouth Naval Shipyard maintaining power, we had a small window of approval to perform the PVT. On more than one occasion the tests did not run exactly as reviewed during the preparatory briefings presented to the Base Command. The result was clear concern from Navy personnel on how to proceed with correcting the issues while maintaining assurance that an inadvertent trip would not occur on a critical load. Even though we had two levels of safety in place (software and mechanical based lockouts) to ensure no inadvertent trips, the facility follows strict nuclear related protocols which require an all stop if testing deviates from the plans reviewed during the briefing. GE was able to identify the programming issues in each case within a timely manner and re-brief with the Navy to instill sufficient confidence to resume testing, successfully completing the PVT, and ultimately gaining approval for us to activate the system to commence with the 12 month demonstration period.

Even after completing PVT and activation of the system, in following weeks PNS later experienced an inadvertent trip of loads by the FLS. It was found that the issue manifested from a routine cycling of the Power Plant emergency diesel generators. We were fortunate that the event was isolated to just three (3) loads which were marked as non-critical and did not result in a disconnection from the utility. NAVFAC was able to recover from the isolated outage of these three breakers with minimal disruption to the Shipyard as whole. Working with GE and NAVFAC we determined that the trouble was rooted in the diesel breakers being left in an active infeed state where the two related F35 relays were monitoring and reporting these assets as generation necessary to keep loads satisfied. This state of monitoring was incorrect since the Shipyard was still connected to the utility and would have had no problem maintaining capacity to all loads (both non-critical and critical), where the utility would have simply picked up where the diesel left off. The GE team did an excellent job of being available for conference calls, data analysis, quickly identifying the issue, and returning to site to correct the settings in the two F35s. NAVFAC, Ameresco, and GE then proceeded to go through some additional review of how the C90 and F35s function and take the system through a series of testing scenarios over a three day period, and the end of this testing the FLS was approved to be put back online.

This was an excellent example of how a demonstration can provide great benefit to implementing relatively complex controls related to Microgrids in a grid-stability sensitive environment. It is also a lesson in the value of performing as much simulated testing as possible at the factory prior to integration with a DoD facility.

MIT Lincoln Laboratories hosted a symposium in February of 2017 demonstrating the advancement in simulating microgrid controls. Many of the leading manufacturers of controls hardware attended this event to demonstrate the newest capabilities to perform simulations utilizing their field hardware in testbeds. Ameresco attended the symposium and see this as an excellent opportunity for manufacturers to perform further in-depth testing of systems they design ahead of shipping to the end user's site. Given the sensitive nature of most DoD facilities to continue to operate without interruption to their mission, we highly recommend that future projects pursue this extensive factory testing option ahead of installation and commission on-site.

Islanding and Power Plant Stability: Over the course of the 12 month demonstration period, PNS experienced three accounts in Loss of Utility. In each case a full loss of utility and successful activation of the FLS occurred, however two of these events resulted in the Gas Turbine Generator tripping off-line and a full-blackout of the Shipyard.

The first event took place on 6-21-16 with 4MW of generation on-line from one Gas Turbine Generator and 15MW of load on the facility. The loss of utility was related to a major catastrophic failure of an air switch located just outside the Shipyard on the incoming feed from the utility. A direct short to ground occurred on one phase and in turn resulted in melting of connections on all three phases as well as starting a fire on the ground wire running down the pole. This short resulted in the GTG tripping on a Differential Relay current fault ahead of F12 (utility breaker) opening, which in turn initiates the FLS. The result is that though the FLS operated as designed the Shipyard still went black due to the loss of its only on-line generator. Data from the F35s, C90, and HMI was collected and full analysis can be found in Section 6.0 of this report.

The second live event occurred on 07-08-16 with 6.5MW of generation on-line from one GTG and two Emergency Diesel Generators, which coincidentally were online for routine cycling when the loss of utility occurred. The facility load was 11.6MW at 6:55am during the time of the event which is lower than the typical 16MW peak expected during mid-day. This event resulted in all mission critical feeders going out to the submarines being saved along with all but two breakers in the FLS priority list, the shedding of non-critical loads out at Sub2 relieved the majority of load required to be shed in order to match on-site generation. One thing to note is that the BESS did not dispatch during this event due to the EDGs already being online at the time of FLS, so we were not successful in capturing a live operation of the BESS. Utility power was restored hours later and the FLS was reset and brought back on-line.

The third loss of utility took place on 10-16-16. The disturbance on the grid is believed to have originated from the utility, resulting in a dramatic sag of voltage on one of the three phases, the utility recloser located at CMP's substation was successful in restoring power within seconds of the event however the disturbance was too long for the on-site GTG to ride through. NAVFAC's findings were inconclusive to what the root cause was on the utility's side.

After analyzing data from the FLS reports, it was determined that the system did indeed shed the appropriate amount of load, assuming that the GTGs where still on-line, however the Shipyard still experienced a black-out because generation was already disconnecting. The conclusion between Ameresco/ GE/ NAVFAC is that the opening of the tie-breaker at Franklin Station on-site was not fast enough to protect the GTGs from a shut-down.

A solution which is being reviewed by all teams is to install a Direct Transfer Trip mechanism between the utility's recloser located at their substation and the tie-breakers at Franklin Station at the Shipyard. This would dramatically reduce the amount of time between an opening of the recloser and in turn opening of the F1 and F12 tie-breakers at the Shipyard. Though this would be an upgrade to the Shipyard's existing interconnection system outside of the ESTCP scope we are working with NAVFAC to price and potentially assist with performing this upgrade under a separate funding mechanism; we see that for the ESTCP demonstration that this is a critical piece of knowledge when considering implementation of a microgrid at other locations.

Take-away is that the FLS has operated as designed. One caveat to this is that it has been determined that the trigger for the FLS (opening of the utility tie(s) at F1 and F12) is not sufficiently fast enough under most LoU cases to successfully prevent the Power Plant from tripping off-line, resulting in black-out of the facility in all but one of the events. Essentially, we have identified that the Gas Turbine Generator protective relay settings trip the units ahead of F1 and F12 opening and initiation of the FLS. NAVFAC is working with the local utility CMP to install a Direct Transfer Trip between their point of connection at F1 and F12 back to the utility's substation recloser which feeds the Shipyard. There is reasonable confidence that this solution will enable the Shipyard to disconnect from the utility before the Power Plant gas turbine(s) go into protective shutdown.

The NAVFAC engineering group at PNS is continuing to work with Central Maine Power (local utility) to devise a solution which will serve to open the utility-tie breaker(s) (F1 and F12) faster/earlier in sequence with opening of the feeder recloser which serves the Shipyard back from the utility's substation. This will serve to more quickly disconnect the Shipyard from a failing utility and set the on-site generation into transition Grid mode to Island mode earlier as well as initiate the FLS earlier. This work is anticipated to be funded directly by the government through NAVFAC PWD-ME's budget.