ERDC/CERL TR-17-38

Construction Engineering Research Laboratory

US Army Corps of Engineers®
Engineer Research and Development Center

ERDC
INNOVATIVE SOLUTIONS for a safer, better world

Strategic Environmental Research and Development Program (SERDP)

Rotary Kiln Gasification of Solid Waste for Base Camps

Stephen D. Cosper

October 2017

Approved for public release; distribution is unlimited.

Strategic Environmental Research and Development Program (SERDP)

ERDC/CERL TR-17-38
October 2017

Rotary Kiln Gasification of Solid Waste for Base Camps

Stephen D. Cosper

U.S. Army Engineer Research and Development Center (ERDC)
Construction Engineering Research Laboratory (CERL)
2902 Newmark Dr.
Champaign, IL 61822

Final Report

Approved for public release; distribution is unlimited.

Prepared for Strategic Environmental Research and Development Program (SERDP)
Arlington, VA 22203

Under SERDP Project No. WP-2211

Rotary Kiln Gasification of Solid Waste for Base Camps

SERDP Project Number WP-2211

U.S. Army Engineer Research and Development Center
Construction Engineering Research Laboratory
2902 Newmark Drive, Champaign, IL 61822

Lead Principal Investigator:
Stephen Cosper
USACE-ERDC-CERL

May 2017
Final Report

REPORT DOCUMENTATION PAGE

Form Approved
OMB No. 0704-0188

Public reporting burden for this collection of information is estimated to average 1 hour per response, including the time for reviewing instructions, searching existing data sources, gathering and maintaining the data needed, and completing and reviewing this collection of information. Send comments regarding this burden estimate or any other aspect of this collection of information, including suggestions for reducing this burden to Department of Defense, Washington Headquarters Services, Directorate for Information Operations and Reports (0704-0188), 1215 Jefferson Davis Highway, Suite 1204, Arlington, VA 22202-4302. Respondents should be aware that notwithstanding any other provision of law, no person shall be subject to any penalty for failing to comply with a collection of information if it does not display a currently valid OMB control number. PLEASE DO NOT RETURN YOUR FORM TO THE ABOVE ADDRESS.

1. REPORT DATE (DD-MM-YYYY)
05-May-2017

2. REPORT TYPE
Final Report

3. DATES COVERED (From - To)

4. TITLE AND SUBTITLE
Rotary Kiln Gasification of Solid Waste for Base Camps

5a. CONTRACT NUMBER

5b. GRANT NUMBER

5c. PROGRAM ELEMENT

6. AUTHOR(S)
Stephen D. Cosper

5d. PROJECT NUMBER
WP-2211

5e. TASK NUMBER

5f. WORK UNIT NUMBER

7. PERFORMING ORGANIZATION NAME(S) AND ADDRESS(ES)
U.S. Army Engineer Research and Development Center (ERDC)
Construction Engineering Research Laboratory (CERL)
PO Box 9005,
Champaign, IL 61826-9005

8. PERFORMING ORGANIZATION REPORT NUMBER
ERDC/CERL TR-14-DRAFT

9. SPONSORING / MONITORING AGENCY NAME(S) AND ADDRESS(ES)
Strategic Environmental Research and Development Program (SERDP)
901 North Stuart Street, Suite 303
Arlington, VA 22203

10. SPONSOR/MONITOR'S ACRONYM(S)
SERDP/OECIF

11. SPONSOR/MONITOR'S REPORT NUMBER(S)

12. DISTRIBUTION / AVAILABILITY STATEMENT
Approved for public release; distribution is unlimited.

13. SUPPLEMENTARY NOTES

14. ABSTRACT

This project was undertaken to design and construct a battalion-scale waste-to-energy (WTE) system based on the principle of gasification. This system was designed to convert 1 to 3 tons per day of mixed wastes to energy, with minimal pre-processing, and with a net-positive energy output (net of parasitic losses). The size of the system should be limited to two, 20-ft shipping containers. The rotary kiln WTE system was conceived to address the following criteria: (1) to accept and process mixed, unsorted municipal waste materials, (2) to minimize process energy required through careful heat management and use of hydraulics, and (3) to integrate into contingency utility systems by using standard diesel generators.

15. SUBJECT TERMS
Rotary Kiln, Gasification, Solid Waste, Waste Management, Contingency Base, Diesel Generator, Waste to Energy, Syngas

16. SECURITY CLASSIFICATION OF:			17. LIMITATION OF ABSTRACT	18. NUMBER OF PAGES	19a. NAME OF RESPONSIBLE PERSON
					Stephen Cosper
a. REPORT	b. ABSTRACT	c. THIS PAGE			19b. TELEPHONE NUMBER
Unclassified	Unclassified	Unclassified	SAR	813	217-398-5569

Standard Form 298 (Rev. 8-98)
Prescribed by ANSI Std. 239.18

Table of Contents

List of Figures ..... **iv**

List of Tables ..... **vi**

Acknowledgments ..... **vii**

Abstract **viii**

List of Acronyms ..... **ix**

1. Introduction **1**

1.1 Objectives 1
1.2 Core Design Objectives 1

2. General Design **2**

2.1 Introduction 2
2.2 Technology for the Project 2
2.3 Feedstock Preparation 2
2.4 Dewatering by Super-Compression 3
2.5 Thermodynamic Process Design Approach 3

3. Indirect Flaming Pyrolysis Rotary Gasifier (IIFPRG) System Equipment Test Configuration for SERDP Mixes **7**

3.1 General Arrangement of Complete System 7
3.2 Process Equipment 10
3.3 Feedstock Handling System 16
3.4 Rotary Gasifier 17
3.5 Quencher 19
3.6 Reflux Pump 20
3.7 Aspiration Gas Mover 20
3.8 Impingement Scrubber 21
3.9 Condenser Cooler 22
3.10 Polisher 23
3.11 Gas Reheater 24
3.12 Flow Orifice 25
3.13 Syngas Sampling Port 25
3.14 Trailer Interconnections 26
3.15 Flammability Test Flare 26
3.16 Syngas Fueling to Engine 27
3.17 Diesel Engine-Driven Generator 27
3.18 Fuel Consumption Measurement 29
3.19 Hydraulic Power System 30
3.20 Engine Exhaust System 31
3.21 Automation System 32

4. Summary of Analytical Data and System Operation **34**

4.1 Overview 34

4.2 Safety 34
4.3 Waste Mixes Used in Testing 35
4.4 Syngas Chemistry 36
4.5 Unexpected Performance and Results Regarding Pyrolysis Oil 37
4.6 Process Description Used for Waste Mix Testing 40
4.7 Sampling Results 42
4.8 Thermodynamics Discussion 54

5. Development of the IIFPRG 61

5.1 Engineering of the IIFPRG 61
5.2 Compression Dewatering 62
5.3 Gasification System Fabrication and Cold Testing 63
5.4 Feedstock Handling System 64
5.5 Feedstock Dewatering 66
5.6 Hot Testing of the IIFPRG 66
5.7 Corrective Action to the IIFPRG System in 2013 70
5.8 Summary Operations after 16 September 2013 75
5.9 Permitting Issues 75

6. CFD Modeling 77

6.1 Methodology 77
6.2 Model Setup 79
6.3 Geometric and CFD Modeling 83
6.4 Equipment arrangement 93

7. Diesel Engine Efficiency Studies 95

7.1 EPA Tier 2 and Tier 3 Engines 95
7.2 Feedstocks for EPA Tier 2 Engines Testing 95
7.3 Test Configuration 96
7.4 Baseline Factory Ratings 97
7.5 Clip Test Procedure 98
7.6 Clip Test Results 98
7.7 Conclusions 100

8. Dewatering Waste via Mechanical Compression 101

8.1 Mechanical Compression to Reduce Moisture Content 101
8.2 Mechanical Dewatering Tests Procedure 101
8.3 Results of Compressions Tests 103
8.4 Equipment and Procedures 106
8.5 Conclusions 107

9. Conclusions and Implications for Future Research/Implementation 109

9.1 Conclusions from this Project 109
9.2 Additional Research Needed 109
9.3 Suggested Implementation 110

10. Bibliography **111**

Appendices **113**

List of Figures

Figure 2-1. Process Design of IIFPRG. 3
Figure 3-1. View of Gasification Trailer #1. 7
Figure 3-2. Schematic Showing Main Reactor and Gas Conditioning. 8
Figure 3-3. Schematic Showing Power Generation. 9
Figure 3-4. Gasification Trailer and Hot Diesel Exhaust Piped to the Gasifier Shell. 10
Figure 3-5. Ram Feeder, Tag # RF-102. 16
Figure 3-6. Plastic Bag of Mixed Waste Place in Feed Bin. 16
Figure 3-7. Rotary Gasifier RG-103. 18
Figure 3-8. Gasifier Nozzle, Spring Plate, and Syngas Discharge Pipe. 18
Figure 3-9. Ash Discharge Pan. 18
Figure 3-10. Diesel Exhaust Discharge Nozzle, Final Emission Point to Atmosphere. 19
Figure 3-11. Quencher QC-104 Located to the Left of Rotary Gasifier RG-103. 20
Figure 3-12. Roots 45 URAI-G Positive Displacement Rotary Lobe Blower PDB-105. 21
Figure 3-13. Impingement Scrubber IS-106. 21
Figure 3-14. Condenser Cooler C-107 – Hydraulic Cooler End with Hydraulic Driven Cooling Fan. 23
Figure 3-15. BASCO Condensate separator CS-108. 23
Figure 3-16. Gas Polisher GP-109 Direct Drive by Hydraulic Motor M-3. 24
Figure 3-17. Polisher Separator PS-110. 24
Figure 3-18. Gas Reheater RH-111, a Fabricated Heat Exchanger. 25
Figure 3-19. Flow Orifice FO-112. 25
Figure 3-20. Syngas Sampling Port SP-120. 26
Figure 3-21. Interconnections between Trailers. 26
Figure 3-22. Syngas Flammability Test Flare FL-230. 27
Figure 3-23. 60kW Diesel Engine-Driven Electric Generator DG-220. 28
Figure 3-24. Three-Phase Digital Power Meter PM-215. 28
Figure 3-25. Load Center LC-216. 29
Figure 3-26. Liquid Fuel Usage Monitoring System LFM-219. 30
Figure 3-27. Gear Pump GP-235 Mounted to Engine Power Take off. 31
Figure 3-28. Catalytic Converter ECC-234 Mounted Directly to Turbo Expansion Turbine Outlet. 32
Figure 3-29. Diesel Exhaust Muffler and Pipe; Stainless Steel Exhaust Sampling Point SP-237. 32
Figure 3-30. Main System Control Enclosure with Color Touch Screen Mounted on Gasifier Trailer. 33
Figure 4-1. Energy Contribution from Organic Groupings. 45
Figure 4-2. Average Dry Heating Value for Each Waste Mix. 46
Figure 4-3. Average Heating Value of Each Mix as a Percentage of Natural Gas. 46
Figure 4-4. Percent of Energy in Syngas Sample Standard Mix #1. 48
Figure 4-5. Percent of Energy in Syngas Sample Standard Mix #2. 48
Figure 4-6. Percent of Energy in Syngas Sample 100% Construction Mix #1. 49
Figure 4-7. Percent of Energy in Syngas Sample 100% Construction Mix #2. 49

Figure 4-8. Percent of Energy in Syngas Sample 50% Food Mix #1. 50
Figure 4-9. Percent of Energy in Syngas Sample 50% Food Mix #2. 50
Figure 4-10. Percent of Energy in Syngas Sample 33% POL Mix #1. 51
Figure 4-11. Percent of Energy in Syngas Sample 33% POL Mix #2. 51
Figure 4-12. Percent of Energy in Syngas Sample 40% Tire Mix #1. 52
Figure 4-13. Percent of Energy in Syngas Sample 40% Tire Mix #2. 52
Figure 4-14. Percent of Energy in Syngas Sample 50% Plastics Mix #1. 53
Figure 4-15. Moisture vs. Heating Value. 59
Figure 4-16. Estimated Loss in Engine Efficiency. 59
Figure 4-17. Energy Flow through the Entire System. 60
Figure 5-1. Gasifier Trailer during Fabrication. 63
Figure 5-2. Six-in. Hydraulic Ram Piston and Compression Chamber. 64
Figure 5-3. Feedstock Hopper. 65
Figure 5-4. Thirty-Five Ton Feedstock Ram. 65
Figure 5-5. Miter Joint. 66
Figure 5-6. Rotary Chain Drive. 67
Figure 5-7. Various Syngas Exit Nozzle Geometries Tested. 68
Figure 5-8. Helical Lifter Uphill of Brick. 68
Figure 5-9. Feedstock Handling System at 22-Degree Inclination. 70
Figure 5-10. Feedstock Handling System and Gasifier at 40-Degree Inclination. 71
Figure 5-11. Hydraulic Rotational Direct Drive. 72
Figure 5-12. Problem of Dropping Brick. 73
Figure 5-13. Thermal Imaging Cut-Out on Stationary Outer Shell. 74
Figure 5-14. Gasifier Fully Insulated with Stainless Steel Cladding and 65-kW Generator, Exhaust Connected to Shell 74
Figure 5-15. Sixty-kW Generator Exhaust Connected to Gasifier. 74
Figure 5-16. Lighting Gasifier with Hand Torch. 75
Figure 6-1. Geometry of the Initial Design Requirements. 79
Figure 6-2. Mesh of the Initial Design Requirements. 80
Figure 6-3. Close up View of Meshed Geometry. 80
Figure 6-4. Meshed Geometry of Other Design Requirements, 360 Degrees. 81
Figure 6-5. Geometry of the Last Design Requirements. 81
Figure 6-6. Mesh of the Last Design Requirements. 82
Figure 6-7. Air Entrance Gap between Rotating and Nonrotating Plate. 82
Figure 6-8. Representative Reaction Chamber Regions. 84
Figure 6-9. May 2013 Configuration. 85
Figure 6-10. July 2013 Configuration. 85
Figure 6-11. September 2013 Configuration. 86
Figure 6-12. October 2013 Configuration. 87
Figure 6-13. October 2013 Configuration with “Pin-Fin” Heat Transfer Surface Extensions. 87
Figure 6-14. Nominal Exhaust Manifold Geometry. 88

Figure 6-15. Rotor Surface Heat Flux Distribution. 89
Figure 6-16. Rotor Surface Heat Flux Distribution with "Pin-Fins." 90
Figure 6-17. Representative Flow Patterns – Vertical Cross-Section. 91
Figure 6-18. Representative Flow Patterns – Plan View. 91
Figure 6-19. Representative Pressure Distributions without Chemical and Particle Dynamics. 92
Figure 6-20. Representative Temperature Distributions without Chemical and Particle Dynamics. 92
Figure 6-21. Side view of gasfier equipment in TRICONs. 93
Figure 6-22. Top View of Gasifier System in TRICONs. 94
Figure 7-1. Equipment Configuration for Clip Tests. 96
Figure 7-2. Fuel Consumption. 97
Figure 7-3. Brake Fuel Consumption. 97
Figure 7-4. Thermodynamic Efficiency. 98
Figure 7-5. Clip Test Efficiency and Fuel Savings. 99
Figure 8-1. Compression Dewatering of Paper Samples. 104
Figure 8-2. Compressed Paper Test Slugs. 105
Figure 8-3. Results of Switch Grass Compression Test. 105
Figure C-1. Syngas Fuel Feed System into a Naturally Aspirated Diesel Engine. 166
Figure C-2. Feeding Syngas into a Turbo Charged Diesel Engine. 168
Figure C-3. Minimum Controls to Feed Ultra-Low Energy Syngas into and I/C Spark Ignition. Engine. 171
Figure C-4. Hybrid Diesel-Otto Generating System for Ultra-Low Energy Syngas. 172

List of Tables

Table 3-1. Equipment and Instrument Tag List. 10
Table 4-1. Expected Syngas Chemistry. 37
Table 4-2. Compounds Analyzed in Syngas Samples. 44
Table 4-3. Summary of Syngas Samples. 47
Table 4-4. Total RCRA Metals in Ash. 4-55
Table 4-5. TCLP RCRA Metals in Ash. 4-55
Table 4-6. Selected PAH Concentration in Quencher Oil. 4-55
Table 4-7. BTEX and PAH Concentrations in Polisher Fluid. 4-56
Table 4-8. BTEX and PAH Concentrations in Condensate. 4-56
Table 7-1. Clip Test Feedstocks. 96
Table 7-2. Clip Test Results. 99
Table 8-1. Paper Dewatering Data. 104
Table 8-2. Switch Grass Samples for Compression. 105
Table B-1. GC Data Summary. 114
Table C-1. Diesel vs. Spark Operating Conditions. 165

Acknowledgments

Funding for this demonstration was provided by the Strategic Environmental Research and Development Program (SERDP) under Weapons Platform (WP) Project 2211 and Operational Energy Capability Improvement Funds, “Rotary Kiln Gasification of Solid Waste for Base Camps.”

To date, this project has featured many individuals and organizations, providing direct support or crucial advice and guidance.

The following persons and organizations are gratefully acknowledged (among other contributors):

- David Waage and Dr. Paul Amodeo, SUNY Cobleskill
- Phil Darcy and Frank Campo, Benét Laboratories
- COL Russell Lachance, USMA
- David Ferguson, USEPA
- Leigh Knowlton, Natick Soldier Center.

Abstract

Objectives

The objective of this project was to develop a battalion-scale waste-to-energy (WTE) system based on the principle of gasification. More specifically, the goal the WTE system was to convert 1 to 3 tons per day of mixed wastes to energy, with minimal pre-processing, and with a net-positive energy output (net of parasitic losses). Also, the size of the system was to be limited to two, 20-ft shipping containers.

Technical Approach

The research team took the approach of developing an entire working prototype, rather than analyzing a portion of the waste gasification process. The rotary kiln WTE system was conceived to address the Statement of Need (SON) criteria, with the following design principles:

- accept and process mixed, unsorted municipal waste materials
- minimize process energy required through careful heat management and use of hydraulics
- integrate into contingency utility systems by using standard diesel generators.

The main gasification reactor is a novel design, based on an updraft gasifier, but rotating with new techniques for introducing waste, and removing syngas. This system was tested on multiple waste mixtures, representative of reported, in-theater waste composition.

Results

The rotary gasification system was successfully developed and testing. The syngas produced was energy rich, mirroring commercial liquid fuels in composition. The resulting ash test non-hazardous for heavy metals. Perhaps most importantly, researchers showed that waste could be consumed with a net-positive energy output.

Benefits

If this technology were to be further developed, demonstrated, and fielded, it could solve the problem of contingency waste disposal, eliminating burn pits, or the need for hauling outside the perimeter of the camp. Additionally, this system outputs net-positive energy, tens of kilowatts at the target scale, thereby displacing a modest fuel requirement.

List of Acronyms

Term	Definition
AC	alternating current
AFT	Auxiliary Fuel Tank
AIChE	American Institute of Chemical Engineers
ASME	American Society of Mechanical Engineers
BGGE	Billion Gallons of Gasoline Equivalent
BHP	brake horsepower
BTU	British Thermal Unit
CB	Contingency Bases
CCG	Certified Calibration Gas (Standard)
CEA	Chemical Equilibrium with Applications (NASA computer program)
CERL	Construction Engineering Research Laboratory
CEST	Center for Environmental Science and Technology
CF	Cubic Feet
CFD	Computational Fluid Dynamics
CFR	Code of the Federal Regulations
CGMA	Cylinder Gas Metering Apparatus
CI ICE	Compression Ignition (Diesel) Internal Combustion Engines
CO	Carbon Monoxide
CONUS	Continental United States
CSIRO	Australia's Commonwealth Scientific and Industrial Research Organization
DC	Direct Current
DoD	US Department of Defense
DOE	US Department of Energy
DPM	Discrete Phase Model
ECM	Electronic Control Module
EG	Ethylene Glycol
EPA	Environmental Protection Agency
ERDC	Engineer Research and Development Center
FC	Fixed Carbon
FID	Flame Ionization Detector
FPD	Flame Photometric Detector
GC	Gas Chromatograph
GPM	Gallons Per Minute
HCL	hydrogen chloride
HDPE	High-Density Polyethylene
HHV	Higher Heating Value
HP	Horsepower
HV	Hand Valve
HVAC	Heating, Ventilating, and Air-Conditioning
I/C	Internal combustion
IFPD	Indirect Flaming Pyrolysis Downdraft
IIFPRG	Indirect Flaming Pyrolysis Downdraft

Term	Definition
IPR	In Progress Review
LHV	Lower Heating Value
METC	Morgantown Energy Technology Center
MFT	Main Fuel Tank
MGAS	METC Gasifier Advanced Simulation
MIG	Gas Metal Arc Welding
MSW	Municipal Solid Waste
NASA	National Aeronautics and Space Administration
NITS	National Technical Information Services
NOX	Generic term for mono-nitrogen oxides NO and NO_2 (nitric oxide and nitrogen dioxide])
NSPS	New Source Performance Standards
NYDEC	New York State Department of Environmental Conservation
OMB	Office of Management and Budget
OS	Oil Separator
OSB	Oriented Strand Board
PDB	Positive Displacement Blower
PG	Propylene Glycol
PID	Proportional Integral Derivative
PLC	Programmable Logic Controller
PM	particulate matter
PRV	pressure reducing valve
psi	Pounds per Square Inch
PSR	Polisher
PVC	Polyvinyl Chloride
R&D	research and development
RANS	Reynolds Averaged Navier- Stokes (RANS)
RDECOM	Research, Development, and Engineering Command
RF	Ram Feeder
RH	Reheater
RPC	Relative Power Capacity
RPM	revolutions per minute
SAR	Same As Report
SBR	Sequencing Batch Reactor
SC	Scrubber
SCADA	Supervisory Control And Data Acquisition
SCF	Standard Cubic Feet
SCFH	standard cubic feet per hour
SCFM	standard cubic feet per minute
SEP	Separator
SERDP	Strategic Environmental Research and Development Program
SLHV	Specific Low Heating Value (SLHV)
SON	Statement of Need
SOX	Sulfur Oxides
SRI	Statistical Research, Inc.

Term	Definition
TCD	Thermal Conductivity Detector
TIG	Gas Tungsten Arc Welding
TR	Technical Report
UHP	Ultra-High Purity
UPH	Ultra-High Purity
US	United States
USA	United States of America
USACE	US Army Corps of Engineers
USEPA	US Environmental Protection Agency
USMA	US Military Academy
VAC	Volt AC
VDC	volt DC
VM	Volatile Matter
WS	Water Separator
WTE	Waste-to-Energy

1. Introduction

1.1 Objectives

The statement of need (SON) to which this project responds, calls for a battalion-scale waste-to-energy (WTE) system based on the principle of gasification. The goal is to convert 1 to 3 tons per day of mixed wastes to energy, with minimal pre-processing, and with a net-positive energy output (net of parasitic losses). Also, the size of the system was required to be limited to two, 20-ft shipping containers.

While the SON states to not focus on engineering an entire WTE system, the research team believed that a holistic approach was really necessary to achieve the performance desired, rather than trying to make incremental improvements to existing technology.

The rotary kiln WTE system was conceived to address the SON criteria, with the following design principles:

- accept and process mixed, unsorted municipal waste materials
- minimize process energy required through careful heat management and use of hydraulics
- integrate into contingency utility systems by using standard diesel generators.

1.2 Core Design Objectives

The Inclined Indirect Flaming Pyrolysis Rotary Gasifier (IIFPRG) was invented and developed by researchers at SUNY Cobleskill in coordination with USACE-ERDC-CERL, Benét Laboratory, and USEPA. The intent was to develop a simple and reliable WTE system that could actually be used by the military, at forward operating bases, thereby meeting the challenge posed by the SON.

System design focused on the following core design objectives:

1. Ensure system safety as the highest priority.
2. Develop a portable, small, simple, and reliable 60 kW trailer-mounted system that can be military containerized in the future.
3. Process a wide variety of waste types with minimal or no feedstock preparation.
4. Handle feedstock only once. Avoid equipment prone to blockages such as multiple conveyors, storage bins, grinders, etc.
5. Dry wet wastes to less than 50% moisture content by squeezing under high compressive stress.
6. Use creative thermodynamic concepts to move heat where needed and recover lost heat to enable the processing of excessively wet feedstock.
7. Inert items such as glass, metals, soil, rocks, etc., must pass through the gasifier easily and discharge with the ash.

2. General Design

2.1 Introduction

The process developed by SUNY Cobleskill and research partners uses a unique form gasification to convert any flammable solid waste into to a synthetic fuel gas (syngas). A 60 kW diesel engine-driven generator operates in dual-fuel mode to generate electricity. The engine operates primarily on gaseous synthetic fuel created from wastes with supplemental liquid fuel.

The prototype system is mounted on two trailers and is fully portable. The system currently processes up to 1.25 tons of wet waste per day and generates between 50 and 60 kW of usable electrical power. Research focuses on how to reliably process mixed stream wastes with minimal requirements for sorting.

2.2 Technology for the Project

The technology uses a simple and robust means of precision thermodynamic energy management to process dripping wet waste into thermal and electrical energy. The energy to sustain the process is provided by the feedstock. SERDP funds were used to further develop and test the concept of IIFPRG.

The IIFPRG is a hybrid rotary gasifier that combines the properties of cross draft, updraft, downdraft, and indirect rotary gasification into one reactor. The thermal energy to sustain thermochemical reactions is provided by the following sources:

1. The combustion of fixed carbon at 1900 to 2100 °F within the reactor at the downhill end.
2. Combustion of a small portion of syngas to raise the temperature of engine exhaust.
3. Indirect thermal energy transfer from heated engine exhaust to process equipment.
4. Exothermic chemical reactions, primarily combustion and water shift reactions.

Sufficient thermal energy exists to process dripping wet wastes.

2.3 Feedstock Preparation

A significant advantage of the IIFPRG system is the ability to process as-received dripping wet wastes. The system is best suited for mixed homogenous wastes. Grinding or shredding of feedstock is required only if the waste will not physically fit into the feed system. A simple ram arrangement pushes feedstock into the gasifier. The ram has sufficient force to shear and break larger materials to allow passage through the feed system. Excessive amounts of fine particles are not a process problem and separation by screening is not required.

Small inert items, such as metals, glass, stones, soils, nails, etc., do not require separation. These items are introduced into the gasifier with the feedstock and discharge with the ash. Combustion temperatures in the downhill end of the gasifier are between 1900 and 2100 °F. The formation of slag may occur as ash and inert items are exposed to extreme temperatures before discharge. Fine bottom ash freely discharges during operation from the downhill end of the gasifier. Clinkers and

slag periodically discharge through an ash door. Large inert items such as structural steel, appliances, drywall, etc. should be separated from the feedstock before processing.

The system is designed to handle dripping wet wastes. Separation and pre-drying of waste is not required. The energy to process excessively wet waste is provided by the feedstock. Additional feedstock must be processed to compensate for excessive moisture. Although the system can process dripping wet wastes, care should be taken to keep feedstock as dry as possible before processing. Wastes should be protected from excessive moisture absorption during heavy weather.

2.4 Dewatering by Super-Compression

The IIFPRG system is designed to process dripping wet wastes, with moisture contents greater than 80% on a wet basis (20% solids / 80% liquids). The super-compression dewatering ram mechanically squeezes dripping wet feedstock, to both densify and remove excessive free liquids as feedstock enters the gasifier. Sufficient bulk chunks must exist in the feedstock to provide an active surface for the dewatering ram to push against. Slurries must be mixed with bulk for dewatering to occur.

The design target of the ram feeder is to lower the average moisture content of the feedstock entering the gasifier to less than 50%. The resulting liquids are captured and stored. Waste liquids are later disposed by injecting into the gasifier when processing excessively dry feedstock, such as wastes high in dry paper and cardboard content.

2.5 Thermodynamic Process Design Approach

The IIFPRG does numerous functions in one reactor vessel as illustrated in Figure 2-1.

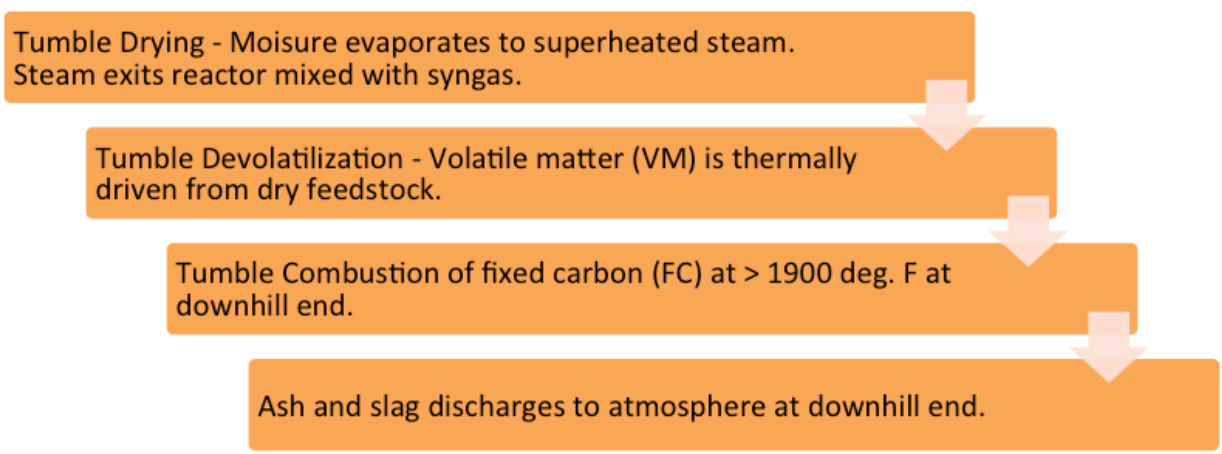

Figure 2-1. Process Design of IIFPRG.

2.5.1 Tumble Reactions

The entire gasifier vessel rotates, allowing raw and partially reacted feedstock to freely tumble within the reactor. Tumbling action allows continual exposure to drying, de-volatilization, and

combustion at different temperature zones within the reactor. The rotary action also helps ash and slag to freely discharge from the downhill end.

2.5.2 Proximate Analysis of Feedstock

The performance of the gasifier is based on the proximate analysis of the feedstock. Feedstock moisture varies dramatically, requiring the evaluation on a dry basis. Feedstock must be categorized on a moisture free percent mass basis as follows:

1. Higher Heating Value (HHV) of the composite feedstock
2. Percent volatile matter (VM)
3. Percent fixed carbon (FC)
4. Percent ash.

2.5.3 Simplified Thermochemical Reactions Using Proximate Analysis

The IIFPRG operates on the following core concepts:

1. All feedstock is first dried when entering the gasifier. Moisture is flashed to superheated steam. Steam exits the gasifier with the syngas.
2. Steam does not contact or pass through the burning char bed, preventing the highly endothermic water-gas reaction (H20 + C -> CO + H_2) from occurring.
3. The slightly exothermic water shift reaction (H_2O + CO -> CO_2 + H_2) does not freely occur within the gasifier due to the lack of a catalyst.
4. Dry feedstock is devolatilized using heat. All gaseous VM is driven out of the feedstock, leaving carbon rich FC.
5. Thermal heat within the gasifier is provided by burning FC at 2100 °F with air that enters the reactor on the far downhill end. Additional heat for drying is provided to the rotating gasifier shell using energy from the diesel exhaust.
6. FC burns fully to ash. Ash discharges from the gasifier at 1900 to 2100 °F.

2.5.4 IIFPRG System Thermodynamics

The operating concept and related thermodynamics of the IIFPRG system are summarized as follows:

1. Bagged and bulk feedstocks are stored in a staging area near the gasifier.
2. Super-compression ram feeder.
   a. Compression dewatering reduces moisture content from dripping wet to < 50% moisture (wet basis).
   b. Feedstock densifies under heat and pressure into a briquette when entering the gasifier.
   c. Compressed feedstock forms an airlock seal.
3. Densified dewatered feedstock enters the gasifier.
   a. Feedstock enters a few inches uphill of the > 1900 °F burning char bed.
   b. Densified feedstock fully dries and breaks apart.
   c. Moisture vaporizes to superheated steam using indirect heat from diesel exhaust.
      (1) Liquid heats from ambient to boiling.

(2) Latent heat of vaporization transforms liquid water into vapor.
(3) Steam is superheated to the gasifier exit temperature.

4. Feedstock heats from ambient to volatilization temperature.
5. Feedstock flash gasifies and devolatilizes into FC as it approaches the burning FC zone. Feedstock devolatilizes into carbon monoxide rich syngas.
6. FC combusts with air at 14,093 BTU/lb. Combustion temperature is between 1900 to 2100 °F at 1.0 equivalence ratio at the downhill end of the gasifier. Ash and inert materials are exposed to high combustion temperatures to thermally decompose all dioxins and furans.
7. The combustion products from burning FC (carbon dioxide and nitrogen) mix with exiting syngas and steam at 500 to 700 °F. These inert gases dilute the energy level of the syngas.
8. Syngas enters the super-heater (indirect exposure to the burning char layer) where the gas mixture is heated to 2100 °F (1150 °C) using direct heat transfer from diesel exhaust heated in the afterburner. This helps to thermally crack larger molecular weight materials.
9. Syngas enters the oil filled quencher-scrubber. This scrubber uses waste motor pool lubricants as the scrubbing liquid. Syngas is cooled from 2100 to 210 °F in less than 1 millisecond to minimize dioxin and furan formation.
10. High dewpoint tars and heavy particulates are removed in the oil scrubber. Syngas at 210 °F exits the quencher-scrubber and enters the condenser. The condenser cools the gas to within 20 °F of the ambient temperature. All remaining steam is condensed to liquid condensate.
11. Hydrogen-rich syngas enters the oil filled quencher-scrubber. This scrubber uses waste motor pool lubricants as the scrubbing liquid. Syngas is cooled from 2100 to 210 °F in less than 1 millisecond to minimize dioxin and furan formation.
12. High dewpoint tars and heavy particulates are removed in the oil scrubber. Syngas at 210 °F exits the quencher-scrubber and enters the condenser. The condenser cools the gas to within 20 °F of the ambient temperature. All remaining steam is condensed to liquid condensate. The majority of steam in the syngas reacts to hydrogen in the water shift reactor, minimizing the formation of condensate downstream of the condenser. Any condensate that forms is removed from the syngas using a cyclonic separator.
13. The flow of scrubbed and filtered syngas is fed both into the diesel engine and into the afterburner. Syngas is fed into the engine intake air stream. The engine speed increases with the presence of gaseous fuel and the governor reduces the injection rate of liquid fuel.
14. Syngas enters the reheater, where it is heated to about 20 °F above the dewpoint.
15. Syngas enters the fluid bed sorbent absorber, where various dry sorbents are used for SOx and heavy metals removal. Sorbents include a mixture of lime (CaO and hydrated), sodium bicarbonate, trona, and activated carbon. Sorbents are replaced based on experimentation. Syngas is filtered using Nomex cartridge filters at the outlet of the dry fluid bed scrubber.
16. The flow of scrubbed and filtered syngas is fed both into the diesel engine and into the afterburner. Syngas is fed into the engine intake air stream. The engine speed increases with the presence of gaseous fuel and the governor reduces the injection rate of liquid fuel.
17. Diesel exhaust, with about 11% excess oxygen enters the afterburner. Syngas mixes with the diesel exhaust and combusts using the excess oxygen in the exhaust stream. The afterburner raises the diesel exhaust temperature from 900 °F to 2400 °F (1316 °C). Automation limits the combustion temperature at 2400 °F to minimize NOx formation and oxygen content. All remaining CO and all dioxins are expected to be destroyed at this temperature (above 1200 °C), although this was not verified experimentally.

18. The heated diesel exhaust exits the afterburner and enters the super-heater to provide sufficient heat to crack raw syngas. Diesel exhaust at approximately 900 °F exits the super-heater and enters the indirect gasifier, where heat is transferred through the rotating gasifier shell to vaporize feedstock moisture. Diesel exhaust exits the gasifier shell to atmosphere at approximately 450 °F.

3. Indirect Flaming Pyrolysis Rotary Gasifier (IIFPRG) System Equipment Test Configuration for SERDP Mixes

3.1 General Arrangement of Complete System

The configuration of the gasification system used on SERDP mix testing was consolidated on two 7x18-ft equipment trailers. The purpose of this was to mimic the size and layout of two, 20-ft shipping containers.

Trailer #1 contained the feedstock handling system, rotary gasifier reactor, the complete syngas scrubbing system, and the master Allen Bradley automation system. Figure 3-1 shows the rotary gasifier in the center, and the waste feed bin on the right, and syngas cooling and cleanup on the left.

Trailer #2 contained a 60 kW generator driven by a John Deere 5030HF270 diesel engine (this is similar to a Tactical Quiet Generator), a 63 kW, 480 VAC, three-phase load center to electrically load the generator, a liquid fuel consumption measurement system, main hydraulic drive system components, DC power conversion system, and a local control panel for load control and data acquisition.

The equipment configuration for all testing of SERDP mixes is shown in Figure 3-2 and Figure 3-3. Full size drawings can be provided upon request. Figure 3-4 shows the main gasifier reactor and the horizontal pipe which carries hot diesel exhaust from the generator to the reactor shell.

Figure 3-1. View of Gasification Trailer #1.

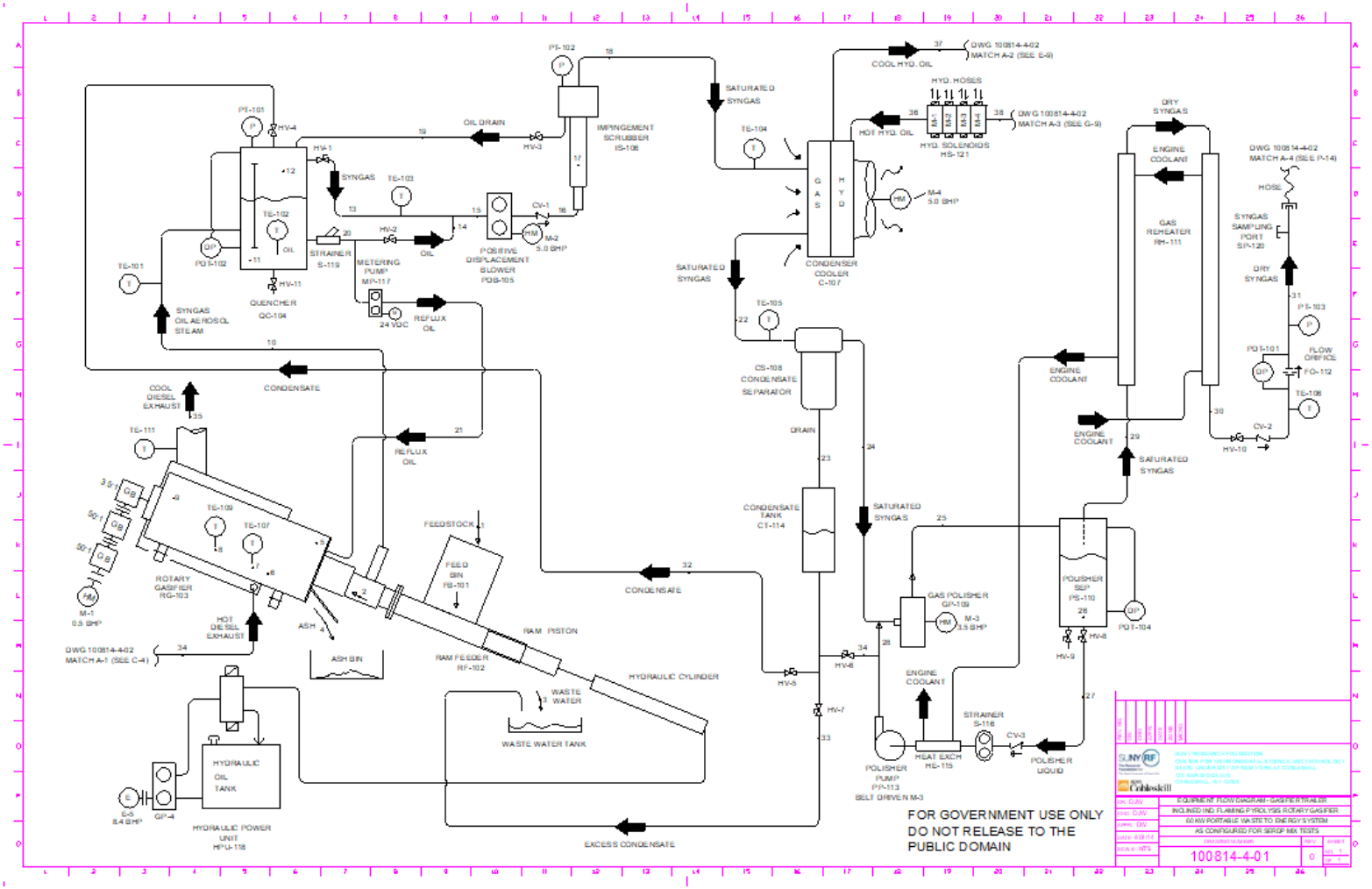

Figure 3-2. Schematic Showing Main Reactor and Gas Conditioning.

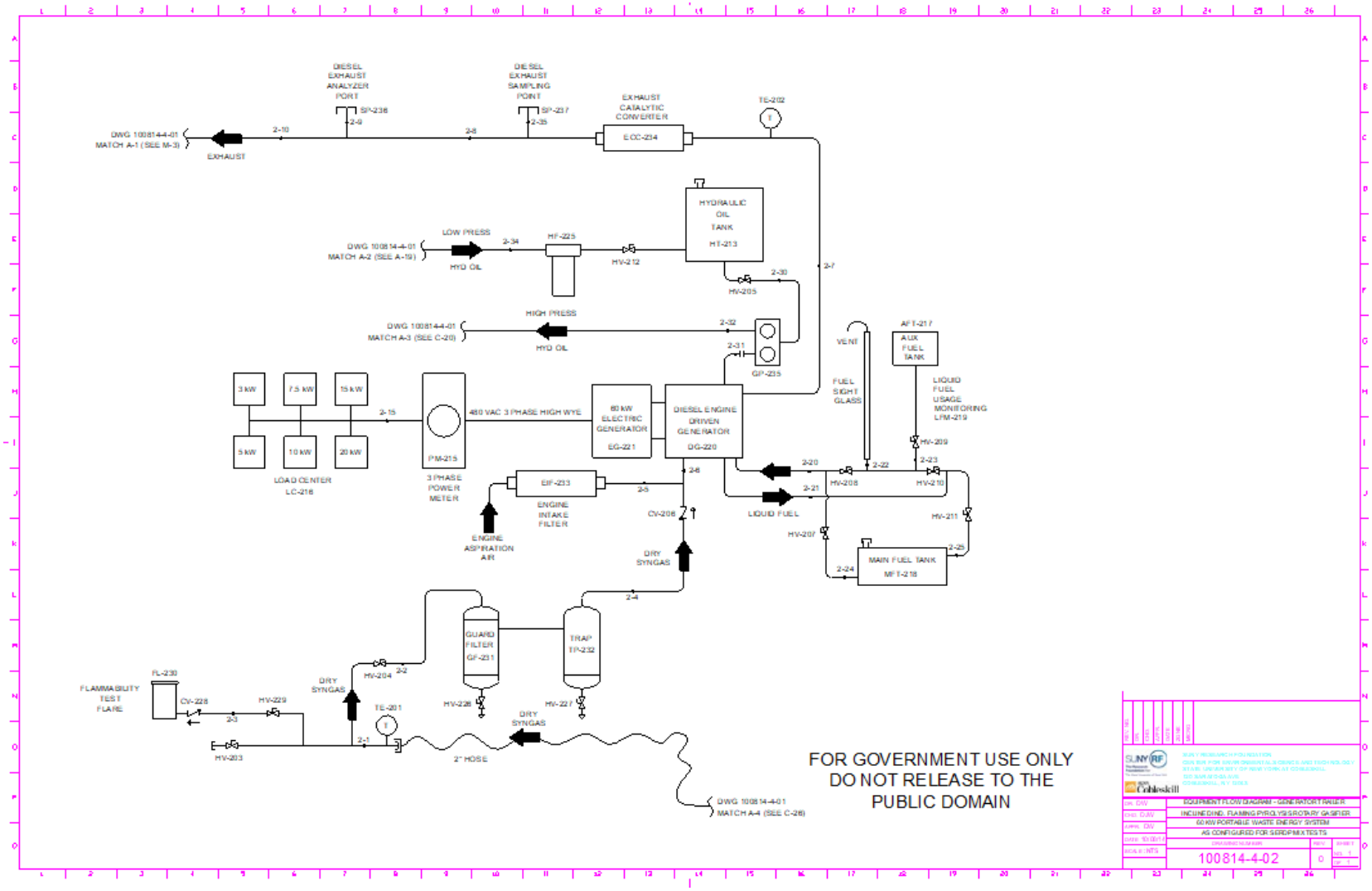

Figure 3-3. Schematic Showing Power Generation.

Figure 3-4. Gasification Trailer and Hot Diesel Exhaust Piped to the Gasifier Shell.

3.2 Process Equipment

Figure 3-2 and Figure 3-3 give the schematic layout of the entire system. These figures are labeled with each part, or "tag number." A description of each part follows in Table 3-1.

Table 3-1. Equipment and Instrument Tag List.

Tag Number	Device	Description	Function	Notes
AFT-217	Aux Fuel Tank	5 Gallon Auxiliary Diesel Fuel Tank	Refills fuel sight glass for fuel consumption measurement	Research purposes only
C-107	Condenser Cooler	Combination syngas condenser and hyd. cooler	Cools syngas to remove moisture and cools hydraulic oil	Hydraulic oil overheats (> 140 F) when attempting to raise dew point by slowing fan speed
CS-108	Condensate Separator	Liquid Separator	Removes liquids from syngas	Only required when condenser is used
CT-114	Condensate Tank	Condensate storage tank	Stores accumulating condensate	6 gallon tank, manual drain
CV-1	Check Valve	Main aspiration non-return check valve	Prevents backflow of syngas if blower stops	Swing check
CV-2	Check Valve	Main syngas non-return check valve	Flashback preventer	Swing check

Tag Number	Device	Description	Function	Notes
CV-206	Check Valve	Swing check - flapper lifts up	Prevents backflow of air into gasification system	Safety device
CV-228	Check Valve	Swing check	Prevents backflow of air into gasification system	Safety device
CV-3	Check Valve	Polisher Liquid non-return check valve	Prevents syngas from flowing thru polisher pump PP-113	Swing check
DG-220	Generator	60 kW Diesel Engine-Driven Generator	Dual fueled on liquid diesel fuel and gaseous synthetic fuel	No bypass flare used - syngas fed to engine during startup and shut down
E-5	Gasoline Engine	Ram Feeder Drive Engine	Engine to drive separate hydraulic pump GP-4	8.4 BHP, intermittent use, hand start
ECC-234	Exhaust Catalyst	Exhaust Catalytic Converter	Burns remaining hydrocarbons in exhaust stream	Significant reduction in unburnt hydrocarbons
EG-221	Electrical Generator Head	60 kW Marelli Generator Head	Generates AC Electricity	4 Pole Synchronous Generator - Wired 480 VAC 3 phase High Wye
EIF-233	Filter	Engine Air Intake Filter	Filters engine aspiration air	
FB-101	Feed Bin	Feed Point	Feedstock handling	Holds raw feedstock
FL-230	Flammability Test Flare	6 in. diameter micro-flare	Used to test syngas flammability at startup and shut down	Research Purposes
FO-112	Flow Orifice	Syngas flow measurement orifice	Measures syngas flow to engine	1.380-in. ID Cd=0.83
GF-231	Guard Filter	Guard Filter with Polypropylene Filter Bag	2, 5, 10, 20, and 50 micron rating tested	20 and 50 micron work well
GP-109	Gas Polisher	Gas Cleaner	Removes low dew point tars and particulates from syngas	Rotary mechanical gas cleaner - virtually no particulates
GP-235	Hydraulic Pump	Constant displacement hydraulic gear pump	Provides system power	Driven by engine mechanical power take off
GP-4	Hydraulic Pump	Ram Feeder Engine-Driven Hydraulic Pump	Pump for ram feeder RF-102	16 GPM, two-stage 4:1 ratio pump
HE-115	Heat Exchanger	Polisher liquid heat exchanger	Uses hot engine coolant to heat polisher liquid	Heat polishing liquid to avoid significant gain or loss
HF-225	Hydraulic Filter	Hydraulic return filter	Filters hydraulic oil returning to tank	10 micron

Tag Number	Device	Description	Function	Notes
HPU-118	Hydraulic Power Unit	Hydraulic power unit for ram feeder	Provides power to drive ram feeder RF-102	Self-contained engine-driven unit
HS-121	Hydraulic Solenoids	24 volt DC (VDC) Hydraulic Solenoid Bank	Reversing, closed center	Dual Coil with manual over-rides
HT-213	Hydraulic Tank	Main Hydraulic Oil Tank	37 gallon steel oil tank	With 100 mesh suction strainer. Oil heating required when operating below 50 °F (oil foams)
HV-1	Hand Valve	Syngas Exhaust from Quencher	Maintenance valve	Ball valve
HV-10	Hand Valve	Syngas shut off valve	Maintenance valve	Ball valve
HV-11	Hand Valve	Quencher QC-104 liquid drain valve	Maintenance valve	Ball valve with plug
HV-2	Hand Valve	Scrubber liquid flow control valve	Throttles scrubber liquid to impingement scrubber IS-106	Ball valve
HV-203	Valve	Hand Valve	Syngas shut off valve	Used to bypass syngas to external flare - early testing
HV-204	Valve	Hand Valve	Syngas shut off valve	Stops flow of syngas to engine - forces flow to flammability test flare F-230
HV-205	Valve	Hand Valve	Hydraulic suction shut off	Maintenance valve
HV-207	Valve	Hand Valve	Fuel shut off valve	Close HV-207 and HV-211 simultaneously to measure fuel usage
HV-208	Valve	Hand Valve	Fuel shut off valve	Maintenance valve
HV-209	Valve	Hand Valve	Fuel shut off valve	Normally closed - open to refill sight glass before fuel usage test
HV-210	Valve	Hand Valve	Fuel shut off valve	Maintenance valve
HV-211	Valve	Hand Valve	Fuel shut off valve	Close HV-207 and HV-211 simultaneously to measure fuel usage
HV-212	Valve	Hand Valve	Hydraulic return shut off	Maintenance valve
HV-226	Valve	Hand Valve	Drain condensate from guard filter	Liquid placed in QC-104
HV-227	Valve	Hand Valve	Drain condensate from Trap TP-232	Liquid placed in QC-104

Tag Number	Device	Description	Function	Notes
HV-229	Valve	Hand Valve	Syngas shut off valve	Normally closed - open to momentary test flammability in flare FL-230
HV-3	Hand Valve	Scrubber drain valve	Throttles scrubber liquid draining from imp. scrubber IS-106	Gate valve
HV-4	Hand Valve	Condensate feed valve	Maintenance valve	Ball valve
HV-5	Hand Valve	Condensate drain valve to quencher QC-104	On-Off to manually drain tank CT-114 as needed	Ball valve
HV-6	Hand Valve	Polisher liquid drain valve	On-Off to manually drain polisher separator PS-110 as needed	Ball valve
HV-7	Hand Valve	Condensate drain valve to wastewater tank	On-Off to manually drain tank CT-114 as needed	Ball valve, emergency drain
HV-8	Hand Valve	Polisher separator PS-110 liquid discharge valve	Maintenance valve	Ball valve
HV-9	Hand Valve	Polisher separator PS-110 drain valve	Maintenance valve	Ball valve with plug
IS-106	Impingement Scrubber	Gas Cleaner	Removes high dew point tars and particulates from syngas	High velocity exchange gas cleaner - Debris drains into quencher QC-104
LC-216	Load Center	Three-Phase AC Load Center	Places electrical load on generator	480 VAC 60 Hz Three-phase forced convection resistance type
LFM-219	Liquid Fuel Usage Monitor	Sight glass style liquid fuel metering	Measures liquid fuel consumption	Research purposes only - measures liquid fuel consumption over 1 minute intervals
M-1	Hydraulic Motor	Rotary Gasifier Drive Motor	Drive motor that rotates reactor vessel RG-103	0.5 BHP motor power, total gear reduction is 8750:1, 1 rot/4 min., manual speed adj., manual rev.
M-2	Hydraulic Motor	Positive Displacement Blower Drive Motor	Drive motor for main gas blower PDB-105	5.0 BHP, automated variable speed, non-reversing
M-3	Hydraulic Motor	Polisher Drive Motor	Drive motor for gas polisher GS-109 and Polisher Pump PP-113	3.5 BHP, direct drive to GS-109, synchronous belt drive to PP-113, manual speed adj., manual rev.
M-4	Hydraulic Motor	Cooling Fan Drive Motor	Drive motor for condenser cooler C-107	5.0 BHP, manual speed adjustment, manual reversing

Tag Number	Device	Description	Function	Notes
MFT-218	Main Fuel Tank	100 Gallon Main Diesel Fuel Tank	Main fuel tank for dual fueling	
MP-117	Metering Pump	Reflux oil metering pump	Meters reflux oil back into the gasifier	24 VDC brushless variable speed gear pump, 150 Watt
PDB-105	Positive Displ. Blower	Gas Mover	Main aspiration blower	Roots 45URAI-G, rotary lobe positive displacement, variable speed using hydraulic motor
PDT-101	Diff. Press. Transmitter	Flow Orifice Diff. Pressure	Instrument	Measures syngas flow to engine using flow orifice FO-112
PDT-102	Diff. Press. Transmitter	Quencher Liquid Level	Instrument	Indicates liquid level in quencher QC-104
PDT-104	Diff. Press. Transmitter	Polisher Separator Liquid Level	Instrument	Indicates liquid level in polisher separator PS-110
PM-215	Power Meter	Three-Phase AC Electrical Power Meter	Measures AC power produced by generator	Digital
PP-113	Polisher Pump	Circulates polisher liquid	Feeds polisher liquid to polisher, belt driven motor M-3	
PS-110	Polisher Separator	Liquid - Gas Separator	Removes polisher liquids from syngas	Gas exits separator saturated
PT-101	Pressure Transmitter	Quencher Static Pressure	Instrument	Quencher vacuum, represents differential pressure over Rotary Gasifier RG-103
PT-102	Pressure Transmitter	Static Pressure - Impingement Scrubber	Instrument	Syngas pressure at scrubber IS-106 outlet
PT-103	Pressure Transmitter	Downstream Orifice Static Pressure	Instrument	Static downstream pressure of sub critical flow orifice FO-112
QC-104	Quencher	Syngas Quencher	Quenches syngas temperature to 165 °F	Cools and cleans syngas, extinguishes flaming embers, removes particulates, condenses organics
RF-102	Ram Feeder	Hydraulic Ram Feeder	Feedstock handling	Compresses and pushes raw feedstock into the rotary reactor
RG-103	Rotary Gasifier	Thermal Reactor	Thermally converts solids and liquids to flammable gas	

Tag Number	Device	Description	Function	Notes
RH-111	Reheater	Heats syngas above dew point	Uses engine antifreeze heat to heat syngas above dew point	Gas exits reheater about 10-15 °F above saturation point
S-116	Strainer	Polisher liquid strainer	Strains debris from polisher liquid	100 mesh baskets
S-119	Strainer	Scrubber liquid strainer	Removes large debris	50 mesh
SP-120	Sample Point	Syngas Sampling Point	Filling point for sample bags and Summa containers	Contains condensate moisture trap
SP-236	Sample Port	Diesel exhaust analyzer port	Used for exhaust analyzer	Port in 4-in. diameter exhaust pipe
SP-237	Sample Port	Diesel exhaust sampling port	Used for exhaust sampling to fill Summa canisters	Stainless Steel 304 sampling train in 4-in. diameter exhaust pipe
TE-101	Type K Thermocouple	Temp of Syngas Exiting Reactor	Instrument	Mixture of syngas, organic vapor, and superheated steam - Normal 350 to 400 °F
TE-102	Type K Thermocouple	Temp of Quencher Liquid	Instrument	Mixture of pyrolysis oil and water - Normal 165 °F
TE-103	Type K Thermocouple	Temp of Syngas Exiting Quencher	Instrument	Saturated syngas with organic vapors - Normal 165 °F
TE-104	Type K Thermocouple	Temp of Syngas Entering Condenser	Instrument	Saturated syngas with organic vapors - Normal 155 °F
TE-105	Type K Thermocouple	Temp of Syngas Exiting Condenser	Instrument	Saturated syngas with organic vapors - Normal 90 to 100 °F
TE-106	Type K Thermocouple	Temp of Syngas Exiting Reheater	Instrument	Syngas heated 10 to 15 °F above dew point
TE-107	Type K Thermocouple	Temp of Reactor Charge 4-in. Uphill of Feed Point	Instrument	Reactor charge - normal operating temperature < 350 °F
TE-109	Type K Thermocouple	Temp of Reactor Charge 20-in. Uphill of Feed Point	Instrument	Reactor charge - normal operating temperature < 350 °F
TE-111	Type K Thermocouple	Temp of Final Diesel Exhaust at Release Point	Instrument	Temperature of diesel exhaust at final exhaust point
TE-201	Type K Thermocouple	Syngas Temperature at Engine Intake	Instrument	
TE-202	Type K Thermocouple	Exhaust Temperature at Turbo Discharge	Instrument	

Tag Number	Device	Description	Function	Notes
TP-232	Trap	Condensate Trap	Final moisture removal before introduction to engine	< 1 cup after full day run

3.3 Feedstock Handling System

Garbage bags containing waste feedstock are placed into feed bin FB-101. Ram feeder RF-102 uses a 35 ton hydraulically driven ram piston to shear, compress, dewater, and push the feedstock uphill into Rotary Gasifier RG-103. If the feedstock contains more than 40% moisture (wet basis), wastewater drains past the ram piston as the feedstock is compressed.

Ram feeder RF-102 is powered by hydraulic power unit HPU-118. For simplicity during research, hydraulic pump GP-4 is driven by an 8.5 horsepower gasoline engine M-5. Pump GP-4 is a two-stage 4:1 ratio gear pump rated for 16 GPM at 1000 psi and 4 GPM at 4000 psi. The pump automatically shifts from high flow-low pressure to low flow-high pressure as the resistance to compress and push the feedstock increases.

Figure 3-5. Ram Feeder, Tag # RF-102.

Figure 3-6. Plastic Bag of Mixed Waste Place in Feed Bin.

3.4 Rotary Gasifier

Cold and wet feedstock enters the Rotary Gasifier RG-103. Two thermocouples indicate the level of feedstock within the reactor. Thermocouple TE-107 is 4-in. uphill from the feedpoint and thermocouple TE-109 is 20-in. uphill from the feedpoint. The syngas exit is at the far uphill point within the gasifier.

The cold wet feedstock dries as the hot gases pass through the tumbling bed. Feedstock moisture evaporates to water vapor, which mixes with the syngas and exits the gasifier. Thermocouple TE-101 indicates the exit temperature of the syngas mixture. Dry feedstock devolatilizes on a very narrow layer of intense temperature gradient just downhill of the feed point. The remaining fixed carbon burns in the downhill section of Rotary Gasifier RG-103. The temperature at the downhill end where the aspiration air enters the reactor to burn the fixed carbon remains constant at 2000 to 2200 °F.

During steady state operation, the level of feedstock charge within the gasifier is maintained between 4 and 20 in. from the feed point. Thermocouples TE-107 and TE-109 indicate the level of feedstock as follows:

1. If TE-109 is about the same temperature as TE-101, the feedstock charge level is below 20-in. uphill of the feed point.
2. If the temperature of TE-109 is lower than TE-101, the feedstock charge level is above 20-in. uphill of the feed point, indicating the gasifier is over-full.
3. If the temperature of TE-107 is lower than TE-109, the feedstock charge level is between 4-in. and 20-in. uphill of the feed point.
4. If the temperature of TE-107, TE-109, and TE-101 are all about the same, the feedstock charge level is less than 4-in. uphill of the feed point, indicating the gasifier requires feeding.

The normal steady state operating temperatures are as follows:

1. TE-107 normally less than 250 °F.
2. Twenty inches uphill of the feedpoint at TE-109 and in the syngas exit pipe at TE-101 are approximately the same and normally operate between 250 to 350 °F.
3. Burning char zone about 1-in. uphill of the stationary spring plate operates consistently between 1800 to 2200 °F.

The gasifier thermally converts the raw feedstock completely into flammable syngas and ash. Any inert items mixed in with the feedstock, such as glass, metals, stones, soils, etc. discharge with the ash. The ash discharges through a narrow gap between the fixed spring plate and the rotating shell. The discharge arrangement naturally grinds clinkers to fine ash. An ash discharge door opens periodically to pass large items, such as metals, stones, glass, etc.

Hydraulic motor M-1 drives the gasifier to rotate slowly at about one rotation every 4 minutes. A variety of gear boxes are used to achieve a reduction ratio of 8750:1. The gasifier rotates reliably and without restriction or jamming during testing.

Hot diesel exhaust at a temperature between 800 to 1100 °F enters the gasifier shell at the downhill end. Exhaust heat transfers indirectly into the reactor through the rotating gasifier shell.

Cool diesel exhaust, at a temperature less than 450 °F, discharges through a nozzle located at the top of RG-103. Indirect heat provides sufficient energy to process exceptionally wet feedstocks (up to 70% moisture content – wet basis).

Figure 3-7. Rotary Gasifier RG-103.

Figure 3-8. Gasifier Nozzle, Spring Plate, and Syngas Discharge Pipe.

Figure 3-9. Ash Discharge Pan.

Figure 3-10. **Diesel Exhaust Discharge Nozzle, Final Emission Point to Atmosphere.**

3.5 Quencher

A mixture of syngas, oil aerosols, and water vapor flows through the gasifier exit pipe into quencher vessel QC-104. The mixture bubbles though a layer of liquid pyrolysis oil and water. The quencher immediately drops the syngas temperature to about 165 °F and extinguishes any flaming embers that may be entrained in the syngas stream exiting the gasifier. Thermocouple TE-102 indicates the temperature of the pyrolysis oil mixture. Pressure transmitter PT-101 indicates the aspiration vacuum and differential pressure transmitter PDT-102 indicates the liquid level in the vessel.

Oil aerosols condense into liquid pyrolysis oil within the quencher vessel. Water mixed in with the pyrolysis oil evaporates, saturating the syngas with moisture in the cavity above the liquid layer. Additional condensate water (32) is fed directly into the quencher vessel through hand valve HV-5, to provide sufficient moisture to maintain evaporative cooling.

The liquid temperature within the quencher is self-regulating and remains between 160 and 170 °F, regardless of the temperature and flow of the syngas entering the quencher. The normal temperature of the syngas mixture entering the quencher remains less than 350 °F, but may exceed 1200 °F when burning the gasifier totally out during a shut down. A liquid temperature in excess of 170 °F at TE-102 indicates water must be added to the quencher.

Figure 3-11. Quencher QC-104 Located to the Left of Rotary Gasifier RG-103.

3.6 Reflux Pump

Oil aerosols mixed with the syngas condense within the quencher, consistently raising the liquid level within the vessel during operation. Hot pyrolysis oil mixed with water at a temperature of about 165 °F exits quencher vessel QC-104, passes through strainer S-119, and enters metering pump MP-117. Variable speed metering pump MP-117 feeds pyrolysis oil back into the reactor vessel to maintain a constant liquid level in quencher vessel QC-104.

The liquid mixture enters the reactor through a dedicated conduit at the point of line flash gasification. This mixture is thermally cracked into lower molecular weight hydrocarbons. The cracking cycle continues until the molecular weight of the resulting hydrocarbons is low enough and the vapor pressure is high enough to evaporate as organic vapors into the syngas flow stream (C12 organics or less).

3.7 Aspiration Gas Mover

Saturated syngas exits the quencher, mixes with strained pyrolysis oil, and enters the intake of the rotary lobe positive displacement blower PDB-105. Hand valve HV-2 throttles the flow of the pyrolysis oil passing through the blower. This oil helps to seal the clearances within the blower, prevent the built up of tars on the rotary lobes, removes heat of compression, and is used as the primary scrubbing liquid within impingement scrubber IS-106.

Blower PDB-105 is driven by an infinitely adjustable variable speed hydraulic motor M-2. This blower aspirates gasifier RG-103 and directly varies the syngas production rate. A minimum aspiration rate of 7 standard cubic feet per minute (SCFM) of syngas is required to provide positive aspiration, which prevents syngas leakage from the air intake of gasifier RG-103.

The entire gasification system was designed for a syngas flow of 85 SCFM. The gasifier was tested to 60 SCFM, with insufficient hydraulic horsepower to drive aspiration blower PDB-105 being the limiting factor. The normal feed rate to the engine was between 20 and 25 SCFM for most feedstock mixes. The maximum flow of syngas into the engine was half to one third of the design flow, because the energy level of the gas was 2 to 3 times higher than expected. As a

result, the gasifier was significantly oversized for the engine-driven generator that was tested. The system could easily fuel an engine with twice the horsepower tested.

The mixture of saturated syngas and pyrolysis oil enter positive displacement blower PDB-105 at a vacuum of about 30 to 40 inches of water column. Thermocouple TE-103 measures the gas temperature at the blower inlet, which remains the about the same as the scrubbing liquid temperature TE-102, or about 160 to 170 °F. The blower isothermally compresses the gas to about 3 to 5 pounds per square inch (psi) pressure at the blower outlet. Check valve CV-1 prevents backflow into the quencher vessel if the blower were to stop.

Figure 3-12. Roots 45 URAI-G Positive Displacement Rotary Lobe Blower PDB-105.

3.8 Impingement Scrubber

The mixture of syngas and pyrolysis oil exit the blower and enter the impingement scrubber IS-106. The scrubber uses fresh oil mixed with recirculating oil to clean the syngas by high momentum exchange. A separator removes oil from the syngas stream and excess oil with high dew point tars drains back to quencher QC-104. Saturated syngas, free of pyrolysis oil and high dew point tars, exits the scrubber IS-106 at pressure PT-102. This oil, mixed with high dew point tars and ash, eventually gasifies as reflux and thermally cracks to low molecular weight hydrocarbons and ash. Any remaining organics in the oil ash fully burns with air within the burning char zone at temperatures between 1800 and 2200 °F. Oil ash mixes with feedstock ash, which discharges at the downhill end of the gasifier and falls into the main ash bin.

Figure 3-13. Impingement Scrubber IS-106.

3.9 Condenser Cooler

Syngas free of high dew point tars, exits the impingement scrubber saturated at temperature TE-104. The normal operating temperature of the syngas at TE-104 is about the same as TE-102 and TE-103, about 160 to 170 °F.

Condenser cooler C-107 is a combined syngas condenser and hydraulic cooler. A single fan, driven by variable speed hydraulic motor M-4, provides cooling air to both the syngas condenser and hydraulic oil cooler.

The syngas enters condenser cooler C-107 to remove moisture by reducing the dew point temperature by removing heat. Syngas mixed with liquid condensate discharge from the condenser. Liquid condensate is removed from the syngas using condensate separator CS-108. The condensate water, mixed with gasoline / diesel range organics drains from CS-108 and accumulates in condensate tank CT-114. The condensate tank periodically empties into quencher QC-104 (using hand valve HV-105), to provide sufficient free water for evaporative cooling and thermal cracking as reflux.

Hot hydraulic oil returning from hydraulic motors drains from hydraulic solenoid bank HS-214. Hot hydraulic oil passes through hydraulic cooler C-107 and cools to maintain a steady state operating temperature of 125 to 135 °F in tank HT-213. A thermostatically controlled hydraulic bypass valve (not shown) diverts oil from entering the cooler to maintain the target operating temperature if the fan is operating too fast. Cool oil exits hydraulic cooler C-107 and filters to 10 micron using hydraulic filter HF-225, before returning to hydraulic oil tank HT-213.

The objective is to vary the speed of the fan using hydraulic motor M-4, to condense the minimum amount of liquid required for quencher QC-104. The remaining moisture present in the syngas eventually passes through the engine as vapor. Removing excess liquid condensate, by excessively cooling the syngas at thermocouple TE-105, results in the removal of gasoline and diesel range organics. Condensing these organics can make the condensate water highly flammable and lowers the energy level of the syngas. Gasoline and diesel range organics should remain as vapor in the syngas mixture.

The shared fan creates operating problems. The fan must operate at a minimum speed to maintain a maximum hydraulic oil temperature of 135 °F. In most cases, this excessively cooled the syngas, providing excess condensate which had to be drained from the system. Reversing the fan to force heat from the hydraulic oil into the syngas condenser was occasionally necessary, especially in cold weather.

Figure 3-14. Condenser Cooler C-107 – Hydraulic Cooler End with Hydraulic Driven Cooling Fan.

Figure 3-15. BASCO Condensate separator CS-108.

3.10 Polisher

The primary purpose of the polisher is to remove low dew point tars and any remaining particulates from the syngas before fueling the engine. Saturated syngas mixes with polishing liquid at the gas polisher GP-109 intake. The polisher liquid is a mixture of ethylene glycol, water, and gasoline range liquids.

Gas polisher GP-109 mechanically transfers any remaining low dew point tars and particulates into the polishing liquid by high momentum exchange. The polishing liquid accelerates using an impeller driven by hydraulic motor M-3. The mixture of syngas and polishing liquid exit gas polisher GP-109 and enter the polisher separator PS-110, where the liquid separates cyclonically from the syngas.

Differential pressure transmitter PDT-104 indicates the level of the polishing liquid reservoir. Polishing liquid circulates through the polishing system by polisher pump PP-113. This pump is synchronously belt driven from hydraulic motor M-3. Polishing liquid exits the polisher separator PS-110 and enters strainer S-116, which contains 100 mesh baskets. S-116 baskets rarely required cleaning (once every 30 to 50 operating days). Check valve CV-3 prevents the backflow of syngas if pump PP-113 stops.

Heat exchanger HE-115 uses engine coolant to heat the polishing liquid to about the same temperature as TE-105. HE-115 regulates the temperature of the polishing liquid to avoid condensation or evaporation to maintain a constant liquid level in polisher separator PS-110. Heating the polishing liquid allows gasoline range organics to vaporize into the syngas, greatly increasing the heating value. Excess condensation in PS-110 occurs when the temperature of the polishing liquid is lower than TE-105. In this case, HE-115 heats the polisher liquid to a temperature 10 to 20 °F higher than TE-105 to evaporate polishing liquid into the syngas stream, lowering the liquid level in PS-110.

The polishing liquid constantly regenerates similar to the quencher liquid. Excess polishing liquid drains from the system using hand valve HV-6 and flows into quencher QC-104, where the liquid naturally fractions and cracks into additional hydrocarbons as reflux.

Figure 3-16. Gas Polisher GP-109 Direct Drive by Hydraulic Motor M-3.

Figure 3-17. Polisher Separator PS-110.

3.11 Gas Reheater

Syngas exits polisher separator PS-110 saturated and enters the gas reheater RH-111, which heats the syngas to 10 to 15 °F above the saturation dew point temperature using hot engine coolant. Dry gas at a relative humidity less than 80% exits the reheater to fuel the engine.

Figure 3-18. Gas Reheater RH-111, a Fabricated Heat Exchanger.

3.12 Flow Orifice

Flow orifice 112 measures the mass flow of syngas using thermocouple TE-106, differential pressure transmitter PDT-101, and downstream static pressure PT-103. The automation system constantly varies the speed of positive displacement blower PDB-105 to insure the actual flow of syngas measured at FO-112 remains equal to the required set point flow. Check valve CV-2 serves as a safety non-return valve if positive displacement blower PDB-105 stops.

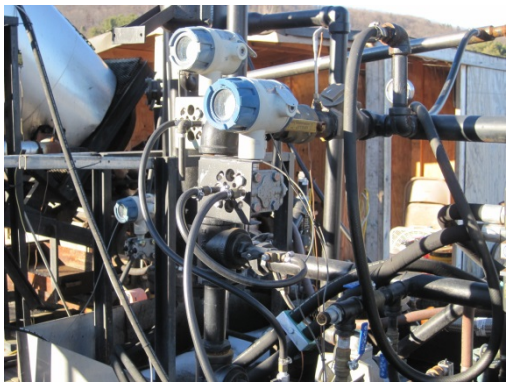

Figure 3-19. Flow Orifice FO-112.

3.13 Syngas Sampling Port

All syngas samples were taken using sampling port SP-120, located directly downstream of the flow orifice. SP-120 was used to fill all sample bags and Summa containers. The sample train was fabricated of stainless steel 304. The piping contained a drop out container to remove any liquids that condense when sampling. The piping was purged with syngas for 60 seconds before filling sampling containers.

Figure 3-20. Syngas Sampling Port SP-120.

3.14 Trailer Interconnections

The following connections are required between the two trailers:

1. 1-1/4-in. Hydraulic supply hose.
2. 1-1/4-in. Hydraulic return hose.
3. ¾-in. Hydraulic case drain hose.
4. 2-in. syngas hose.
5. ¾-in. Hot engine coolant supply hose.
6. ¾-in. Cool engine coolant return hose.
7. 4-in. Insulated diesel exhaust pipe.
8. 24 VDC power supply cable from engine charging system.
9. Ethernet data communication cable.

Figure 3-21. Interconnections between Trailers.

3.15 Flammability Test Flare

Syngas is not flared during startup or shut down. All of the syngas produced passes through the diesel engine. Flare FL-230 is a small flare cup that allows the momentary testing of syngas flammability during startup and shut down. Hand valve HV-229 throttles a small flow of syngas to flare FL-230, from the main syngas flow to the engine. Testing sustained combustion at startup indicates the gas is of sufficient energy to provide appreciable liquid fuel savings. The loss of combustion permits the engine to shut down when stopping the system.

Figure 3-22. Syngas Flammability Test Flare FL-230.

3.16 Syngas Fueling to Engine

Dry syngas enters 50µm guard filter GF-231 to remove any foreign debris, such as dirt from handling the 2-in. syngas hose connection when connecting the two trailers. Diesel engine DG-220 is a considerable distance (about 30 feet) from gas reheater RH-111, resulting in significant cooling in cold weather conditions. The piping and hose act as a heat exchanger, allowing the syngas to drop below the dew point and causing condensation. GF-231 also serves as a moisture trap to capture any liquids that may have condensed between the reheater and the engine. Future systems should locate the engine adjacent to the reheater to prevent condensation issues.

Trap TP-232 acts as a final guard to remove any remaining liquid from the syngas. In practice, very little water accumulates within this vessel (2 tablespoons per day).

Check valve CV-206 prevents air from entering the system in the event positive displacement blower PDB-105 suddenly stops and serves as a flashback preventer. Engine intake filter EIF-233 provides filtered aspiration air to mix with raw syngas at the inlet of the turbo charger compressor.

3.17 Diesel Engine-Driven Generator

Diesel engine-driven generator DG-220 drives a 60 kW synchronous electric generator EG-221. The generator produces 3-phase alternating current electrical power at 480 VAC and 60 Hz frequency. Power meter PM-215 monitors the voltage, current, frequency, power factor, and power generated. Load center LC-216 consumes the electrical power generated at varying loads set by the operator.

Figure 3-23. 60kW Diesel Engine-Driven Electric Generator DG-220.

Figure 3-24. Three-Phase Digital Power Meter PM-215.

Figure 3-25. Load Center LC-216.

3.18 Fuel Consumption Measurement

Syngas fueling reduces liquid fuel consumption. Liquid fuel usage monitoring system LFM-219 volumetrically monitors the amount of liquid fuel being consumed by the engine. Under normal conditions, liquid fuel (2-24) flows out of the main fuel tank and flows (2-20) to the engine fuel injection system. The engine uses an open fuel circuit allowing unused fuel (2-21) to return to the main fuel tank MFT-218 (2-25).

A 60 second duration "Clip test" is used to measure the volumetric consumption of liquid fuel using the following procedure:

1. Isolate main fuel tank MFT-218 by simultaneously closing hand valves HV-207 and HV-211.
2. Open hand valve HV-209 to fill the fuel sight glass using auxiliary fuel tank AFT-217. Close HV-209 when the fuel glass is adequately full.
3. All of the liquid fuel entering the engine withdraws from the fuel sight glass. The volumetric flow of fuel entering the engine (2-22) is measured over a 60 second duration using a dry erase marker.
4. The calculated volumetric flow rate of fuel into the engine is the product of the cross sectional area of the sight glass and the drop in fuel over a 60 second period.

Figure 3-26. Liquid Fuel Usage Monitoring System LFM-219.

3.19 Hydraulic Power System

The gasification system is mechanically driven by hydraulic powered components. The engine is equipped with a mechanical power take off that is separate from the crankshaft, which drives constant displacement hydraulic gear pump GP-235. A low pressure (< 1800 psi) and constant flow system was selected due to safety, simplicity, and economics.

Hydraulic oil from tank HT-213 provides suction flow to the gear pump. A heater was added to tank HT-213 to prevent foaming when the oil temperature is less than 50 °F. Pressurized oil at 1700 psi flows from the generator trailer to the gasification trailer. Hydraulic solenoid bank HS-121 uses dual coil three-position closed center hydraulic valves to control each hydraulic motor on the gasification trailer. Blower PDB-105 uses proportional hydraulic control valve downstream of the solenoid to vary shaft speed. Block mounted relief valves regulate the maximum system pressure at 1700 psi by allowing unused oil to return to hydraulic oil tank HT-213.

Low pressure oil exits HS-214 at about 25 psi and flows to hydraulic cooler C-107. A thermostatic control valve set at 130 °F (not shown) allows cool oil to bypass the cooler. This valve uses a thermal element to open, forcing hot hydraulic oil (over 130 °F) to flow through cooler C-107. Cool oil exits cooler C-107, flows to the generator trailer, filter HF-225, and tank HT-213.

Figure 3-27. Gear Pump GP-235 Mounted to Engine Power Take off.

3.20 Engine Exhaust System

Engine exhaust from the outlet of the turbo charger expander flows into exhaust catalytic converter ECC-234. Thermocouple TE-202 indicates the exhaust temperature at the inlet of converter ECC-234. This temperature varies from 900 to 1300 °F, depending on the gaseous fueling rate and engine load. ECC-234 is an after-market platinum based catalytic converter, which burns remaining hydrocarbons in the exhaust stream.

Engine exhaust exits converter ECC-234 and flows through an insulated 4-in. diameter pipe that interconnects the generator trailer to the gasification trailer. The onsite diesel exhaust analyzer was connected directly to diesel exhaust sampling point, located on the gasification trailer. Summa canisters were filled using diesel exhaust sampling point SP-237 for off-site analysis by Wadsworth Labs. The sample location was directly adjacent to the generator, 24 in. downstream of the discharge port of ECC-234, before muffler entrance. The Summa containers were certified cleaned and pre-evacuated to perfect vacuum before sampling. The stainless steel sampling lines were allowed to thermally stabilize and purge before filling. An inline particulate filter was not used, allowing diesel particulate matter to freely enter the Summa container.

Hot diesel exhaust, at approximately 800 °F flows into the annulus between the insulated stationary outer shell and the rotating inner shell at the downhill end of the gasifier. The rotating shell absorbs exhaust heat, which is primarily used to dry the feedstock within the reactor. Cool diesel exhaust discharges to atmosphere through the nozzle located at the uphill location on reactor RG-103. Thermocouple TE-111 indicates the diesel exhaust temperature, which is normally less than 450 °F.

Figure 3-28. Catalytic Converter ECC-234 Mounted Directly to Turbo Expansion Turbine Outlet.

Figure 3-29. Diesel Exhaust Muffler and Pipe; Stainless Steel Exhaust Sampling Point SP-237.

3.21 Automation System

The system was controlled by an Allen Bradley Micrologix 1600 programmable logic controller (PLC) and a Panel View Plus 1000 color touch screen located in a NEMA 4 electrical enclosure mounted on the gasifier trailer. Rockwell Automation Factory Talk software was used as a Supervisory Control And Data Acquisition (SCADA) system for data logging and collection.

A separate control panel was mounted on the generator trailer. This panel contained an Allen Bradley Micrologix 1100 programmable logic controller that communicated data with the gasifier PLC by Ethernet.

The system was operated remotely from a control room located within the Center for Environmental Science and Technology using the Factory Talk SCADA software running on a laptop computer. A wireless Ethernet router that is located within the generator trailer control panel was used to provide a wireless link between the gasifier control system and the control room.

All of the electrical components on the system and the entire automation system operate on 24 volts DC. Each trailer is powered by a 12 VDC to 24 VDC step up power converter located on the generator trailer to provide regulated 24 VDC power. The entire system is powered using the 12 VDC charging system and alternator mounted on the generator engine.

Figure 3-30. Main System Control Enclosure with Color Touch Screen Mounted on Gasifier Trailer.

4. Summary of Analytical Data and System Operation

4.1 Overview

Gasification testing on six different feedstock mixes that are representative of wastes encountered on forward operating bases was completed successfully. The system converted all of these waste mixes into usable electricity at a significant net energy gain.

A 60 kW diesel engine-driven generator operated at approximately 66% to 75% crankshaft load for 244 hours operating on syngas derived from the six SERDP waste mixes. The average liquid diesel fuel savings during the majority of these tests varied between 50 and 65%, with 81% being the maximum savings measured.

The engine operated a total of 472 hours on various waste derived syngas. Engine disassembly and inspection commenced at the conclusion of hot testing. The engine was disassembled, inspected, and reassembled to factory rebuilt specifications. No internal wear, loss of compression, or cylinder damage occurred due to operating on waste derived syngas.

The rotary gasification system has numerous unique advantages when compared to other WTE technologies, including small size, reliability, simplicity, and safety. The exhaust emissions when operating dual fueled are significantly lower than when operating on 100% liquid diesel fuel.

4.2 Safety

A significant advantage of the IIFPRG system is safety. A key design philosophy was simplicity and operator safety.

A significant finding from the research was the natural production of pyrolysis oil within the rotary gasifier dramatically improves overall safety of the system. Various changes to the system were required to handle the pyrolysis oil production and reformation. These changes resulted in the highest level of safety possible from any gasification system.

The production of free hydrogen can be very dangerous. Hydrogen has a high flame propagation speed, which greatly increases the risk of violent explosions within process vessels by direct ignition by a flaming ember or by flashback, where the combustion of syngas initiates at the engine and travels backwards through the scrubbing system towards the gasifier. The rate of combustion during flashback is so violent, the flame within the pipe acts as a jet pump, drawing air by Venturi action back into the scrubbing system and providing sufficient oxygen for a violent explosion.

The overall design of the system effectively addresses flashback by various mechanical design features and by intentionally preventing the production of free hydrogen. The gasifier design forces free hydrogen to react and reform into less volatile hydrocarbons, which evaporate into the syngas stream as gasoline and diesel range liquids.

The system implements the following safety features:

1. The rotary gasifier operates at slightly negative pressure.
2. The gasifier vessel is continuously welded and does not require any mechanical seals to prevent air from leaking into the system.
3. The syngas piping and scrubbing system is continuously welded with minimal joints, limiting the risk of leaks in the system.
4. The scrubbing system can be hermetically sealed, preventing the leakage of gas and liquids to atmosphere and preventing human exposure.
5. Syngas must be bubbled through a bed of liquid pyrolysis oil.
6. Immediately extinguishes any flaming embers entrained with the syngas.
7. Acts as a liquid flame stop if flashback occurs.
8. The amount of free hydrogen produced by the system is very low compared to other gasification technologies. Free hydrogen reforms into less volatile hydrocarbon gases and vapors.
9. Unreacted feedstock moisture causes the syngas to dilute with water vapor, which greatly reduces gas volatility with virtually no effect on engine performance.
10. Volume in process vessels are kept to a minimum and are designed with stirring velocities to prevent oxygen accumulation.
11. Gas residence time in entire system from gas production to engine combustion is less than 500 milliseconds. Gas is not stored and is immediately consumed.
12. The reactor operates at very low internal temperatures (less than 350 °F) preventing auto-ignition at the point where feedstock enters the gasifier.
13. The gasifier design prevents air from entering the system during an unexpected loss of aspiration due to a mechanical failure. Syngas flows backwards and gently combusts at the ash withdrawal point until aspiration is restored or the system cools.
14. Able to automatically adjust gas production to demand over a wide range of flows, providing a dramatic turn down ratio.
15. Gasifier naturally regulates the flow of aspiration air into the reactor based on thermal demands, which stops oxygen from entering the system at all times, preventing the need for the automation system to regulate the flow of blowing air to maintain safe oxygen levels during upset conditions.
16. Syngas is fed into the engine from startup through shut down. A combustion flare is not required or used.

4.3 Waste Mixes Used in Testing

Multiple field waste studies have been conducted by DoD agencies. Six synthetic mixes that either closely represent the actual waste content observed or are of significant military interest for disposal were developed for prototype testing as follows:

1. **Standard long term mix** consisting of 15% (by weight) corrugated cardboard (OCC), 15% office, news, and mixed clean paper, 6% HDPE plastic, 6% PET plastic, 6% PP plastic, 20% wet food waste, 24% wood waste, 4% inerts (metals, glass, stones, soils), and 4% textiles (polyester and cotton).
   a. The moisture content of the mix is 28% (wet basis).
   b. The HHV (dry basis) of the mix is 9559 BTU/lb.

c. Proximate analysis of the mix (dry basis) is 80.3% VM, 10.0% ash, 9.6% FC.

2. **50% Plastics** consisting of 15% HDPE plastic, 15% PET plastic, 15% PP plastic, 20% wet food waste, 15% wood waste, and 20% chopped rubber (mostly sequencing batch reactor [SBR]).
   a. The moisture content of the mix is 21.7% (wet basis).
   b. The HHV (dry basis) of the mix is 13787 BTU/lb.
   c. Proximate analysis of the mix (dry basis) is 80.3% VM, 10.0% ash, 9.6% FC.

3. **33% Petroleum, Oil, Lubricants (POL)** consisting of 15% corrugated cardboard (OCC), 5% office, news, and mixed clean paper, 15% wet food waste, 20% wood waste, 2% textiles (polyester and cotton), and 10% chopped rubber (mostly SBR).
   a. The moisture content of the mix is 18.3% (wet basis).
   b. The HHV (dry basis) of the mix is 12080 BTU/lb.
   c. Proximate analysis of the mix (dry basis) is 84.3% VM, 5.4% ash, 10.1% FC.

4. **50% Food** consisting of 20% corrugated cardboard (OCC), 15% office, news, and mixed clean paper, 3% HDPE plastic, 3% PET plastic, 3% PP plastic, 50% wet food waste, 5% wood waste, and 1% inerts (metals, glass, stones, soils).
   a. The moisture content of the mix is 44.3% (wet basis).
   b. The HHV (dry basis) of the mix is 8264 BTU/lb.
   c. Proximate analysis of the mix (dry basis) is 80.3% VM, 10.0% ash, 9.6% FC.

5. **100% Construction** consisting of 15% corrugated cardboard (OCC), 5% office, news, and mixed clean paper, 2% HDPE plastic, 2% PET plastic, 2% PP plastic, 10% wet food waste, 50% wood waste, and 14% inerts (metals, glass, stones, soils).
   a. The moisture content of the mix is 29.2% (wet basis).
   b. The HHV (dry basis) of the mix is 7095 BTU/lb.
   c. Proximate analysis of the mix (dry basis) is 65.3% VM, 23.5% ash, 10.6% FC.

6. **40% Tires** consisting of 8% (by wt.) corrugated cardboard (OCC), 8% office, news, and mixed clean paper, 5% HDPE plastic, 5% PET plastic, 5% HIPS (high index polystyrene) plastic, 8% wet food waste, 7% wood waste, 5% inerts (metals, glass, stones, soils), 5% textiles (polyester and cotton), and 40% chopped rubber (mostly SBR).
   a. The moisture content of the mix is 14.8% (wet basis).
   b. The HHV (dry basis) of the mix is 10374 BTU/lb.
   c. Proximate analysis of the mix (dry basis) is 67.3% VM, 17.2% ash, 15.7% FC.

4.4 Syngas Chemistry

The IIFPRG reactor was originally to produce synthetic gas chemistry similar to updraft gasifiers. The percent volume of each component gas was expected to vary between the low energy and the high energy chemistry shown in Table 4-1.

The expected HHV of the gas was between 81 and 144 BTU per standard cubic foot (BTU/scf). Syngas of similar chemistry marginally sustains combustion (with significant flame separation)

at a HHV greater than 110 BTU/scf in an open burn cup. A HHV greater than 140 BTU/scf is required for reliable sustained combustion. The projected syngas mixture was to have marginal flammability sufficient to co-fuel a diesel engine.

The intent of gasification is to devolatilize solid and liquid feedstock using thermal energy to the lowest molecular weight component gases possible, which are primarily hydrogen, carbon monoxide, and a small amount of methane gases. The chemical equilibrium of these reactions is well established and understood. As shown in Table 4-1, the energy content (HHV) of pure hydrogen and carbon monoxide gas are similar (326 and 323 BTU/scf), which is about 1/3rd the energy content of natural gas.

A mixture of fixed carbon and ash remain after the feedstock is fully devolatilized. The IIFPRG reactor uses flaming pyrolysis, which burns the remaining fixed carbon with air to provide the heat necessary to sustain the thermochemical reaction. The combustion of fixed carbon dilutes the syngas with carbon dioxide and nitrogen, which are inert and contribute no energy value.

The traditional syngas mixture consists of hydrogen, carbon monoxide, carbon dioxide, nitrogen, and a small amount of methane. The design of the IIFPRG reactor is to handle exceptionally wet feedstocks by preventing the highly endothermic water-gas reaction, which converts water into additional hydrogen and carbon monoxide gases. The design prevents the water shift reaction, which converts water and carbon monoxide to additional hydrogen and carbon dioxide. The reactor design limits hydrogen production to less than 9% by volume in the syngas mixture, primarily to conserve the highly endothermic process of converting water to hydrogen gas.

Table 4-1. Expected Syngas Chemistry.

Component	HHV BTU/scf	Low Energy % Volume	Component BTU/scf	High Energy % Volume	Component BTU/scf
Hydrogen	326	5%	16.3	10%	32.6
Carbon Monoxide	323	17%	54.91	25%	80.75
Methane	1011	1%	10.11	3%	30.33
Carbon Dioxide	0	9%	0	15%	0
Nitrogen	0	68%	0	47%	0
		HHV Total =	81	HHV Total =	144

4.5 Unexpected Performance and Results Regarding Pyrolysis Oil

Before the interim report issued in March 2014, the IIFPRG gasifier was successfully tested on various cafeteria waste, wood chips, and biomass, which produced small quantities of liquid "biocrude" pyrolysis oil that condensed out of the gas and accumulated at dry points in the gas cleanup system. The production rate of biocrude oil was relatively low (1 to 2 gallons per hour) and was difficult to measure due to the design of the gas cleanup system. Excess oil was drained from the system at the conclusion of testing each day.

Testing on various SERDP waste mixes commenced during the summer of 2014. Gasifying representative Forward Operating Base (FOB) waste mixes containing paper, cardboard, plastic, rubber, textiles, and POL greatly increased the production of pyrolysis oil to amounts that were 4 to 6 times greater than previous observations. ***This event dramatically changed the entire progression of this project.***

Various attempts to adjust process conditions to reduce oil generation failed (temperatures, flows, feeding methods, rotational speed, etc.). As a next step, multiple mechanical changes to the internals of the gasifier were also tested. Trials were unsuccessful and the gasifier did not produce flammable gas due to uncontrolled combustion of gas within the reactor when attempting to crack the oil into synthetic gas at higher temperatures.

4.5.1 Research on External Cracking Methods

Various methods were considered to crack the pyrolysis oil and tars after the syngas exited the reactor. The following methods were investigated:

1. Use plasma or carbon element electric arc to heat the mixture of syngas, oil vapor, and steam to a temperature of 2200 °F for at least 10 milliseconds retention on a platinum catalyst. The energy just to raise the temperature of the syngas mixture to the reaction temperature is over 200,000 BTU/hr. ***The amount of thermal energy just to heat the mixture will require 60 kW of electricity, which is all of the power generated, making an electrical powered cracking*** concept a net energy loss.
2. Energy recovery from exothermic cracking (partially burning on a catalyst) would be nearly impossible from a practical standpoint due to the lack of heat exchanger survival at the required operating temperatures and fouling.
3. Cracking the oil on a red-hot bed of burning carbon fueled by coal or coke. Researchers determined about 25 to 50 pounds per hour of coal or coke is required to sustain this reaction, since significant thermal energy is required for cracking the steam mixed with the syngas (not possible to prevent the water-gas and water shift reactions). This option has numerous safety issues, greatly increases complexity, significantly reduces the energy level of the syngas, and was determined not practical for use on FOB's.

Researchers at SUNY Cobleskill decided the best way to thermodynamically crack the pyrolysis oil would be to separate the liquids from the syngas and then use the burning char layer within the reactor for thermal cracking by pumping the liquids back into the reactor as reflux.

4.5.2 Development of Reflux Concept

The gasifier operates on the concept of "tumbling line flash gasification", where cold wet feedstock directly contacts the burning layer of red-hot char on a narrow line within the reactor. The temperature gradient is in excess of 1300 °F over a distance the length of which is less than 2-in. Feedstock devolatilizes by "flash pyrolysis" at a small interface area within the reactor.

Flash pyrolysis is well understood in other gasification technologies and is commonly used to generate high amounts of liquid pyrolysis oil. Researchers at SUNY Cobleskill eventually accepted the fact that it would be impossible to stop the production of liquid pyrolysis oil and it is not practical to crack these liquids external to the reactor.

The amount of oil production created numerous problems and serious safety concerns with the original scrubbing system that had to be resolved before further testing could occur. Safety issues included the elimination of the dust cyclone and numerous vessels with large volume, which could allow air to leak into the system and oxygen to accumulate in dead spaces. The original

scrubbing system also used waste crankcase oil as the scrubbing liquid, which quickly diluted with pyrolysis oil.

The quantity of pyrolysis oil produced required consistent draining from the system during operation and became a liquid waste disposal problem. A 5-hour test run could easily produce 30 to 40 gallons of pyrolysis oil, quickly filling 55 gallon storage drums. Researchers felt that the only way to complete the SERDP run testing was to develop a way to re-gasify the high quantities of pyrolysis oil as an effective means of disposal.

The pyrolysis oil was originally viewed as a problem, but was quickly found to be an asset if it could be used scrub the gas of tars and particulates, and then meter the "dirty" oil back into the reactor as reflux for disposal by re-gasification within the 2200 °F burning carbon layer. The implementation of this concept required major modifications to both the reactor and the entire scrubbing system, but dramatically improved the entire performance of the system while enhancing simplicity and optimizing safety.

Significant research was required to modify the reactor and develop a scrubbing system that could work reliably using the pyrolysis oil created by the reactor as the scrubbing liquid. This work was completed throughout 2014.

Numerous advantages to this concept quickly became apparent to researchers as follows:

1. The scrubbing system removes tars and particulates from the syngas and forces contaminates into the pyrolysis oil.
2. Pumping pyrolysis oil back into the reactor as reflux dramatically improves the energy value of the synthetic fuel gas (by a factor of five), which is significantly different than traditional syngas from gasification.
3. Dial-in energy value possible. The pumping rate directly affects the heating value of the syngas mixture. The heating value of the gas dramatically changes when the operator adjusts the speed of the reflux pump.
4. Particulates in the pyrolysis oil separate within the reactor and discharge with the normal feedstock ash.
5. Removing moisture by thermally cooling syngas also condenses significant amounts of gasoline and diesel range liquids. These compounds crack within the gasifier by mixing condensate with the reflux flow.
6. Unreacted oil naturally oxidizes near the air entry, greatly increasing the thermal energy within the reactor.
7. Significant improvement in overall system safety and reliability.
8. Ease of operation. The reactor gravitates to a natural thermal operating point where the aspiration air self-varies based on equilibrium energy of the chemical reactions, without the need of automation and controls.

Another observation after the pyro oil was added back to the gasifier was a dramatic reduction in liquid diesel fuel consumptions at lower gas flows, indicating a much greater energy value within the syngas;

4.5.3 Additional Gaseous Hydrocarbons

The above observations indicate there are additional flammable hydrocarbons within the syngas contributing to the excess energy. Researchers initially felt these hydrocarbons were limited to the gaseous C2, C3, and C4 family of organics (as is the case with downdraft gasification). The GC located at SUNY Cobleskill was calibrated during the summer and fall of 2014 to indicate C2 through C4 organics, but tests continued to indicate the GC analysis was missing significant hydrocarbons that were contributing to the energy level of the gas. In many cases, the energy level predicted by the GC chemistry was under-predicted by over 100% when compared to the combustion based gas analyzer.

The combustion based analyzer predicted wet gas energy values in excess of 280 BTU/scf, when the GC predicted a dry energy content of 130 BTU/scf. The combustion based analyzer was very close to the thermodynamic energy balance around the engine, further raising the suspicion of additional C5+ hydrocarbon vapors within the syngas.

In the fall of 2014, it was decided to do further analysis of both syngas and diesel exhaust samples to the New York State Dept. of Health, Wadsworth Labs. This lab has very extensive capabilities, and can provide a full organic range analysis.

4.5.4 Vapor Phase Organics

Organic psychrometric analysis indicates a significant amount of liquid organics can evaporate into the syngas mixture in the form of organic humidity, similar to how gasoline vapors evaporate into air at the intake of a spark ignition internal combustion engine. The ability of the liquids to evaporate into the gas depends on the molecular weight and vapor pressure of the liquid, as well as the temperature of the syngas. Analytical analysis indicated significant amounts of C5 through C9+ organic liquids can evaporate into the gas, contributing to the energy value of the gas mixture.

4.6 Process Description Used for Waste Mix Testing

Rotary reactor RG-103 fully dries and devolatilizes each feedstock mix using thermal energy from diesel engine exhaust (indirect heat transfer) and from burning the remaining fixed carbon in the feedstock using air. Feedstock moisture flashes to superheated steam that mixes with the syngas before exiting the reactor. Condenser C-107 removes the majority of moisture from the syngas before sampling point SP-120 using condensate separator CS-108, but the condensate obtained during early tests (Jan/Feb 2015) was highly flammable (similar to gasoline). All subsequent tests after Feb. 2015 operate with the lowest possible condenser fan speed (hydraulic motor M-4) to avoid producing excessive condensate while providing adequate cooling to the hydraulic system. Excess condensate was transferred to quencher QC-104. Heat from the engine cooling system was added to polisher GP-109 liquid using heat exchanger HE-115 to obtain an equilibrium liquid level in the polisher separator PS-110 (no condensation or evaporation). Excess condensate was drained from condensate tank CT-114 into a wastewater drum only when temperature conditions could not be maintained to evaporate all condensate produced due to weather conditions or equipment limitations. The objective for each test was to evaporate all of the condensate liquid into the syngas, producing a wet gas and recovering the energy value of

any organics mixed in the liquids. The resulting moisture content in the syngas at the sampling point was less than 15% by mass for all tests.

The reactor flash gasifies feedstock, which creates significant amounts of pyrolysis oil. The production of oil varies based on the feedstock and was in excess of 25% of the thermal energy in the unreacted feedstock. Oil aerosols mixed with the syngas condense into a liquid within quencher vessel QC-104, which scrubs the gas of high dew point tars at an equilibrium temperature of 165 °F. The quencher naturally operates consistently at 165 °F by evaporative cooling due to the presence of steam and water mixed in the pyrolysis oil.

Variable speed reflux metering pump MP-117 regulates the flow of reflux, which is a mixture of oil and condensate from quencher vessel QC-104 and into the reaction zone within the gasifier RG-103. The speed of the pump was manually set by the operator during each test to maintain a constant level within the quencher vessel QC-104. Condensate mixed with pyrolysis oil thermo-chemically cracks within the reactor into lighter organics (C12 or less) at temperatures approaching 2200 °F. The reflux mixture continually circulates and cracks until the combination of molecular weight and vapor pressure allow these organics to fully evaporate and leave the process as vapor with the syngas. Reflux pump MP-117 was adjusted each time feedstock was added to maintain a consistent liquid level in quencher QC-104 for the test duration tests.

Feedstock devolatilizes to fixed carbon within the reactor. Air enters the bottom of the reactor to burn this fixed carbon fully to ash. The combustion products (mostly carbon dioxide and nitrogen) mix with the syngas and exit the reactor. The reactor operated naturally aspirated on air for all tests.

Low dew point tars are removed downstream of condenser C-107 by polisher GP-109. The polisher uses a mixture of ethylene glycol and water at high momentum exchange to scrub the gas. The temperature of the polisher liquid was manually adjusted by the operator to maintain the same temperature or slightly higher than the condenser outlet, minimizing the gain or loss of polishing liquid. The ethylene glycol consistently evaporates into the syngas mixture and was not replaced. The polisher operates on 100% condensate, which has a high gasoline range liquid content and did not freeze during the cold weather tests. The polisher liquid regenerates when excess condensate accumulates in polisher separator PS-110 due to the loss of temperature control (manual adjustment or equipment limited), requiring the transfer of liquid to quencher QC-104 at least once per test run, where the tars in this liquid are eventually re gasified as reflux.

Reheater RH-111 uses excess thermal energy from the engine block to heat the syngas mixture about 15 °F above the pressure dew point. The syngas sampling point was directly downstream of the reheater.

Syngas is mixes with intake air and combusts in 60 kW diesel engine-driven generator DG-220. The engine governor automatically adjusts the liquid fueling rate based on the gaseous fueling rate. As the gaseous fueling rate increases, the liquid diesel fuel consumption decreases, with a maximum possible liquid fuel savings of about 81%.

4.7 Sampling Results

4.7.1 Syngas Sampling Procedure

A single feedstock mix was run for each test day. One syngas sample and one diesel exhaust sample was obtained at the midpoint of each test. A 4-hour test normally takes 6 to 8 hours from engine on until engine off.

The syngas sample is obtained downstream of the reheater at sampling port SP-120. Gas was allowed to flow through the sampling train for at least 60 seconds to allow full purging and thermal stabilization. A moisture trap at the sampling point removes liquid condensate. The sampling bag or Summa container was connected with syngas flowing through the sampling train to minimize the risk of air contamination.

Syngas is normally a mixture of carbon monoxide, hydrogen, nitrogen, carbon dioxide, and a slight amount of methane. Multiple samples were analyzed on site using a GC and combustion based calorimeter. Prior research on downdraft gasification indicated a close match in HHV between the GC and combustion based calorimeter when analyzing for these components.

A significant difference in heating value was observed between the GC and combustion based calorimeter when testing the rotary reactor. Researchers felt the mismatch was the difference of gaseous range organics (C2 to C4). The GC was re-calibrated to include C2 to C4 organics, which reduced the mismatch of HHVs between the two methods. A significant mismatch still occurs, especially when feeding reflux oil into the reactor, indicating the presence C5+ organic vapors in the syngas mixture. The main objective of Wadsworth Labs was to identify the type and content of these higher level organics that are in the syngas mixture.

The main objective of the syngas sampling is to determine the presence of gaseous organics (C2 to C4) and vapor organics (C5 to C9+). Even in small amounts, these organics were found to greatly increase the gross heating value of the syngas.

The following objectives were for the syngas analysis at Wadsworth Labs:

- Identify all significant organic compounds in the syngas.
- Measure each significant compound to the best possible accuracy.
- Determine the percentages of total hydrocarbons in each group. The group being determined by the number of carbon atoms (C2, C3, C4, C5, through C9). This percentage includes significant peaks, as well as insignificant peaks.
- Group hydrocarbons present based on their structures, i.e., alkanes, alkenes, aromatics, etc.
- Provide chromatograph outputs sheets.
- Summarize data in tables with compound names and percentages, as appropriate.
- Compare the chromatograph footprint to standard commercially available fuels.
- Provide a brief written summary of the method, equipment, dilution amount, findings, concerns, conclusions, and recommendations.

A full day test was conducted on each SERDP waste mix, with the exception of the 50% plastics run. High plastics content did not create a problem during testing, but increased the viscosity of

the pyrolysis oil used in quencher QC-104 after the test was complete and the system cooled overnight. The pyrolysis oil solidified in QC-104 and in all adjoining equipment where the pyrolysis oil contacts. A second duplicate test at 50% plastics content was cancelled to avoid a repeat of the problems experienced. The plastics content should be limited to less than 30% by mass to avoid this problem in the future.

Syngas samples for each waste mix were obtained after the system stabilized for at least 2 hours at steady state operation. Samples were obtained in certified pre-evacuated Summa containers for analysis at Wadsworth Labs. The results of the Wadsworth report are contained in Appendix A* to this report.

4.7.2 Syngas Components Analyzed

Each syngas sample was analyzed by Gas Chromatograph-Mass Spectrometer at Wadsworth Labs for a total of 35 compounds as shown in Table 4-2.

* Note that the Appendices to this report are included in a separate volume entitled, *Rotary Kiln Gasification of Solid Waste for Base Camps: Appendices A-D.*

Table 4-2. Compounds Analyzed in Syngas Samples.

Organic Compound	Formula	MW	Specific Gravity	Heat of Combustion kJ/mol	HHV Heat of Combustion BTU/scf	LHV Heat of Combustion BTU/scf
Carbon Dioxide	CO_2	44	1.52	0	0	0
Nitrogen	N_2	28	0.97	0	0	0
Hydrogen	H_2	2.016	0.069	290	326	274
Carbon Monoxide	CO	28.01	0.967	285	323	323
Methane	CH_4	16.04	0.5543	890	1011	909
Ethane	C_2H_6	30.07	1.05	1560	1791	1619
Propane	C_3H_8	44.09	1.56	2220	2582	2315
n-Butane	C_4H_{10}	58.12	2.07	2874	3365	3101
Propene	C_3H_6	42.08	1.4	1911	2332	2181
1,3-Butadiene	C_4H_6	54.09	1.9	2540	2933	2729
Isoprene	C_5H_8	68.12	2.35	3157	3580	3410
Acetone	C_3H_6O	58.08	2	1772	2006	1862
n-Hexane	C_6H_{14}	86.169	2.97	4202	4761	4404
Methyl Ethyl Ketone	C_4H_8O	72.11	2.5	2444	2786	2590
Cyclohexane	C_6H_{12}	84.16	2.98	3920	4563	4180
n-heptane	C_7H_{16}	100.2	3.45	4817	5452	5100
Benzene	C_6H_6	78.107	2.69	3315	3753	3591
Methylcyclohexane	C_7H_{14}	98.19	3.39	4565	5181	4200
Toluene	C_7H_8	92.132	3.176	3955	4482	4206
n-Nonane	C_9H_{20}	128.26	4.41	6125	6923	6494
Ethylbenzene	C_8H_{10}	106.17	3.66	4564	5172	4970
M,P-Xylene	C_8H_{10}	106.158	3.662	4559.8	5171	4956
O-Xylene	C_8H_{10}	106.158	3.662	4552	5162	4958
Styrene	C_8H_8	104.15	3.6	4394	4993	4830
Isopropylbenzene	C_9H_{12}	120.19	4.1	5260	5899	5661
n-Decane	$C_{10}H_{22}$	142.28	4.9	6778	7674	7190
n-Propylbenzene	C_9H_{12}	120.19	4.14	5260	5956	5661
1,3,5-Trimethylbenzene	C_9H_{12}	120.19	4.1	5241	5878	5584
1,2,4-Trimethylbenzene	C_9H_{12}	120.19	4.15	5195	5897	5602
d-Limonene	$C_{10}H_{16}$	136.24	4.7	6167	6994	6644
p-Isopropyltoluene	$C_{10}H_{14}$	134.22	4.62	5860	6631	6300
1,2,3-Trimethylbenzene	C_9H_{12}	120.19	4.15	5198	5900	5605
n-Undecane	$C_{11}H_{24}$	156.3	5.4	7429	8438	7846
n-Dodecane	$C_{12}H_{26}$	170.3	5.96	7901	9090	8650
Naphthalene	$C_{10}H_8$	128.2	4.421	5156	5845	5552

4.7.3 Syngas Chemistry – Executive Summary of Results

Figure 4-1 shows the average syngas chemistry broken down into flammable component groups as follows:

1. Traditional Syngas – Mixture of hydrogen, carbon monoxide, and methane.
2. Gas Phase – Grouping of gaseous C2 through C4 organics at standard conditions.
3. Gasoline Range – Grouping of liquid C5 through C9 organics at standard conditions.
4. Diesel Range – Grouping of liquid C10 and higher organics at standard conditions.

Figure 4-1 shows the dry syngas energy distribution of each flammable component group contributes to the total energy within the syngas mixture. The total energy of non-traditional

syngas components (C2 and higher) contributed more than 65% of the total energy within the gas sample. The data validates the theory C2 through C4 gaseous organics and C5+ liquid organics significantly enrich the energy content of the syngas. Gasoline and diesel range liquids evaporate into the syngas as vapor in the form of organic humidity.

Figure 4-2 shows the average dry heating value for each waste mix tested. The HHV is the gross energy (BTU per standard cubic foot) recovered if the water vapor from the hydrogen component portion is fully condensed within the exhaust. The low heating value is the net energy recovered if the exhaust remains hot, preventing the recovery of latent heat from condensing water vapor. The low heating value is used for all engine calculations, since the water vapor in the exhaust is not condensed.

Figure 4-3 shows the heating value of each waste mix as a percentage of natural gas. Table 4-3 summarizes the syngas mixtures tested at Wadsworth Labs.

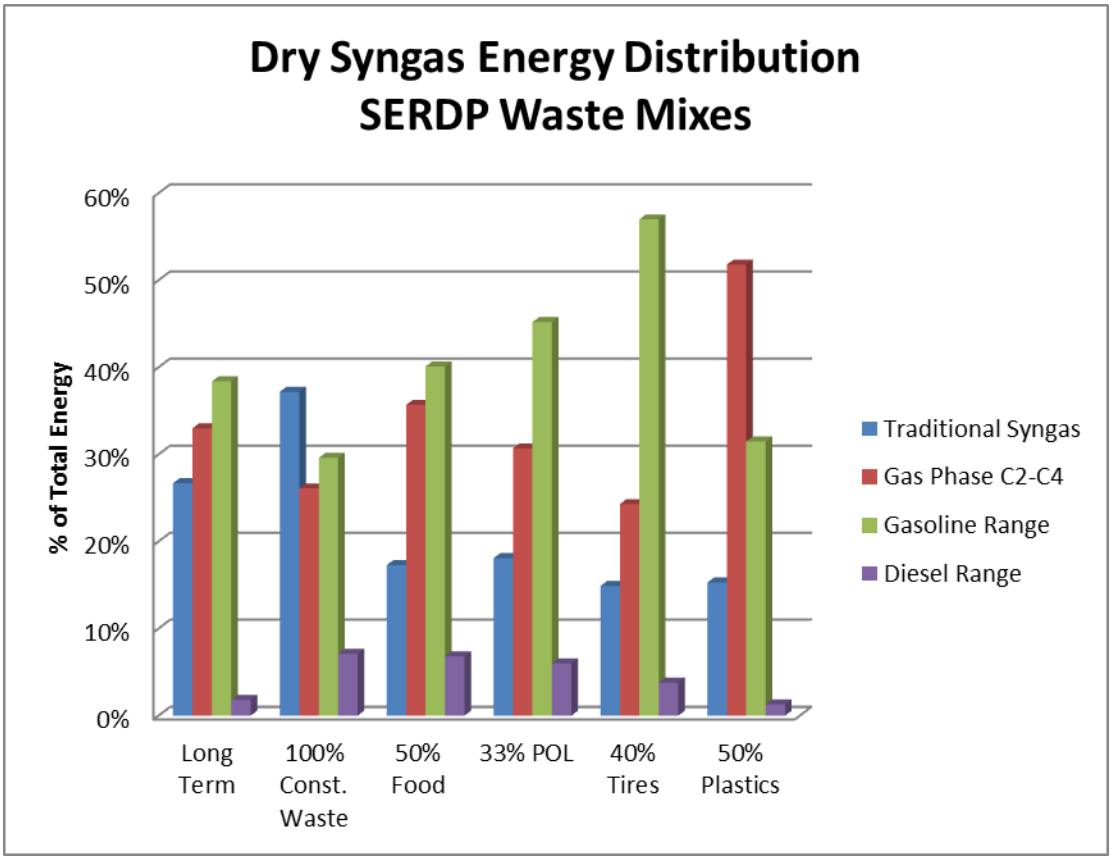

Figure 4-1. Energy Contribution from Organic Groupings.

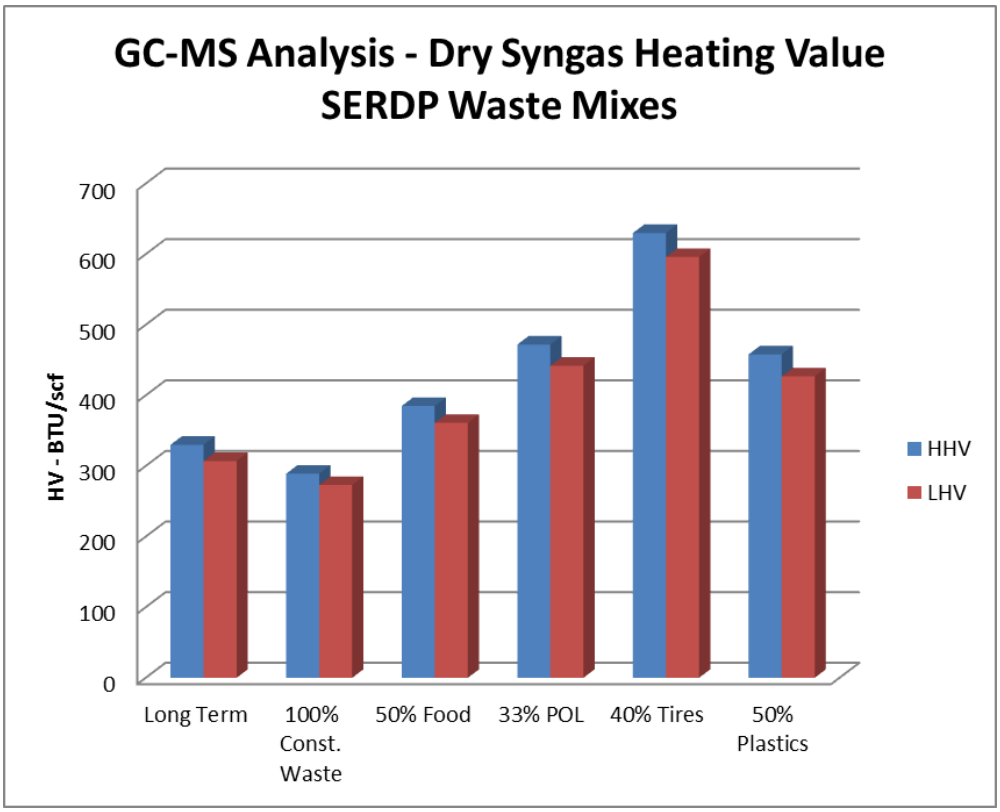

Figure 4-2. Average Dry Heating Value for Each Waste Mix.

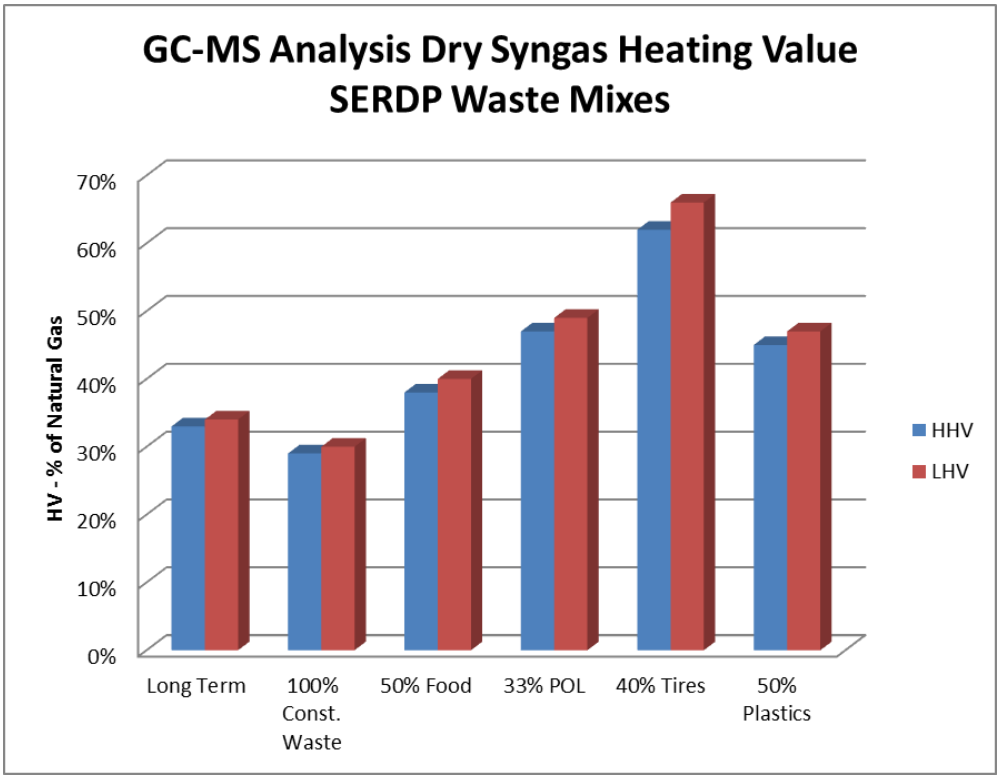

Figure 4-3. Average Heating Value of Each Mix as a Percentage of Natural Gas.

Table 4-3. Summary of Syngas Samples.

	Long Term Mix #1	Long Term Mix #2	Long Term AVG	100% Constr. Mix #1	100% Constr. Mix #2	100% Constr. AVG	50% Food Mix #1	50% Food Mix #2	50% Food AVG	33% POL Mix #1	33% POL Mix #2	33% POL AVG	40% Tire Mix #1	40% Tire Mix #2	40% Tire AVG	50% Plastics Mix #1
HHV BTU/scf	361	298	330	353	225	289	351	418	385	357	587	472	607	653	630	458
HHV % NG	36%	29%	33%	35%	22%	29%	35%	41%	38%	35%	58%	47%	60%	64%	62%	45%
LHV BTU/scf	339	275	307	332	213	273	329	392	361	336	547	442	574	617	596	427
LHV % NG	37%	30%	34%	37%	23%	30%	36%	43%	40%	37%	60%	49%	63%	68%	66%	47%
Energy Totals																
H2	5.69%	7.23%	6.5%	5.72%	8.33%	7.0%	4.37%	5.08%	4.7%	6.24%	4.50%	5.4%	2.93%	2.74%	2.8%	3.34%
C1	18.46%	22.08%	20.3%	21.90%	38.51%	30.2%	14.43%	10.75%	12.6%	15.73%	9.82%	12.8%	11.94%	12.16%	12.1%	11.94%
C2	5.45%	7.22%	6.3%	2.64%	4.38%	3.5%	4.89%	6.51%	5.7%	3.11%	13.13%	8.1%	3.72%	1.81%	2.8%	9.82%
C3	27.86%	15.83%	21.8%	21.31%	12.90%	17.1%	21.23%	23.70%	22.5%	10.99%	18.09%	14.5%	8.42%	23.29%	15.9%	30.43%
C4	5.31%	4.36%	4.8%	6.65%	4.28%	5.5%	7.07%	8.07%	7.6%	5.92%	10.08%	8.0%	6.47%	4.89%	5.7%	11.59%
C5	12.61%	3.98%	8.3%	5.70%	2.53%	4.1%	7.70%	14.42%	11.1%	23.75%	17.09%	20.4%	30.85%	31.41%	31.1%	13.82%
C6	18.01%	10.90%	14.5%	12.19%	8.45%	10.3%	18.77%	9.39%	14.1%	7.65%	12.81%	10.2%	10.37%	6.90%	8.6%	13.84%
C7	4.30%	16.46%	10.4%	5.00%	4.37%	4.7%	5.38%	4.29%	4.8%	3.68%	3.77%	3.7%	6.24%	4.22%	5.2%	2.47%
C8	1.01%	6.67%	3.8%	3.22%	6.46%	4.8%	3.62%	9.64%	6.6%	3.16%	4.07%	3.6%	7.65%	7.08%	7.4%	0.58%
C9	0.70%	2.21%	1.5%	7.58%	3.77%	5.7%	3.82%	3.18%	3.5%	12.05%	2.37%	7.2%	7.27%	2.04%	4.7%	0.82%
C10	0.50%	2.46%	1.5%	5.98%	3.75%	4.9%	5.58%	4.15%	4.9%	5.12%	3.24%	4.2%	2.80%	2.42%	2.6%	0.91%
C11	0.07%	0.48%	0.3%	1.83%	1.91%	1.9%	2.73%	0.67%	1.7%	2.32%	0.88%	1.6%	1.13%	0.90%	1.0%	0.31%
C12	0.02%	0.13%	0.1%	0.27%	0.35%	0.3%	0.41%	0.14%	0.3%	0.27%	0.15%	0.2%	0.21%	0.14%	0.2%	0.13%
	100.0%	100.0%	100.0%	100.0%	100.0%	100.0%	100.0%	100.0%	100.0%	100.0%	100.0%	100.0%	100.0%	100.0%	100.0%	100.0%
% of Energy																
Trad Syngas	24.1%	29.3%	26.7%	27.6%	46.8%	37.2%	18.8%	15.8%	17.3%	22.0%	14.3%	18.1%	14.9%	14.9%	14.9%	15.3%
C2 Thru C4	38.6%	27.4%	33.0%	30.6%	21.6%	26.1%	33.2%	38.3%	35.7%	20.0%	41.3%	30.7%	18.6%	30.0%	24.3%	51.8%
Gasoline Range	36.64%	40.22%	38.4%	33.68%	25.59%	29.6%	39.29%	40.94%	40.1%	50.29%	40.11%	45.2%	62.38%	51.65%	57.0%	31.53%
Diesel Range	0.59%	3.07%	1.8%	8.09%	6.02%	7.1%	8.73%	4.96%	6.8%	7.72%	4.27%	6.0%	4.14%	3.46%	3.8%	1.34%

4.7.4 Results from Waste Mixes

Figures 4-4 to 4-14 show the percent of energy each group contributes to the syngas sample. The sum of these groups equal 100%. The majority of energy in the plastic mix was from gaseous phase components, indicating polyethylene breaks down to ethylene, polypropylene breaks down to propylene, etc. These gases may be further cracked or reformed into other hydrocarbons due to the presence of free hydrogen.

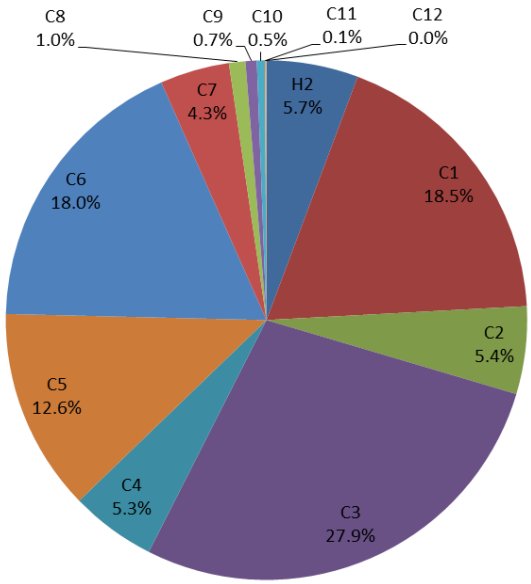

Figure 4-4. Percent of Energy in Syngas Sample Standard Mix #1.

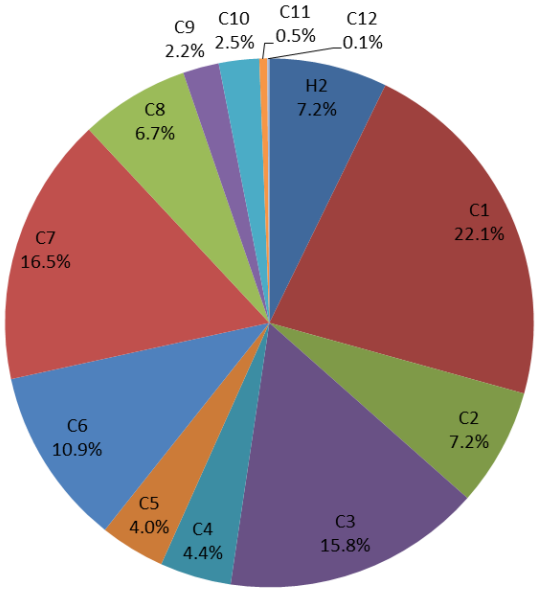

Figure 4-5. Percent of Energy in Syngas Sample Standard Mix #2.

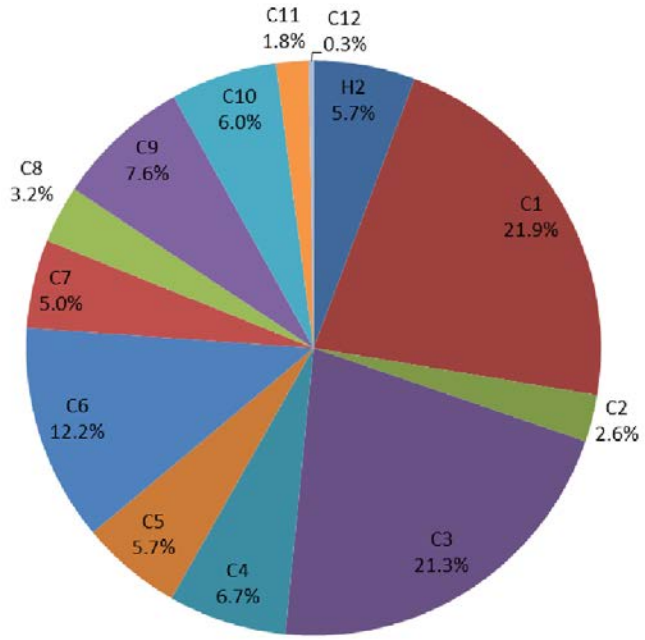

Figure 4-6. Percent of Energy in Syngas Sample 100% Construction Mix #1.

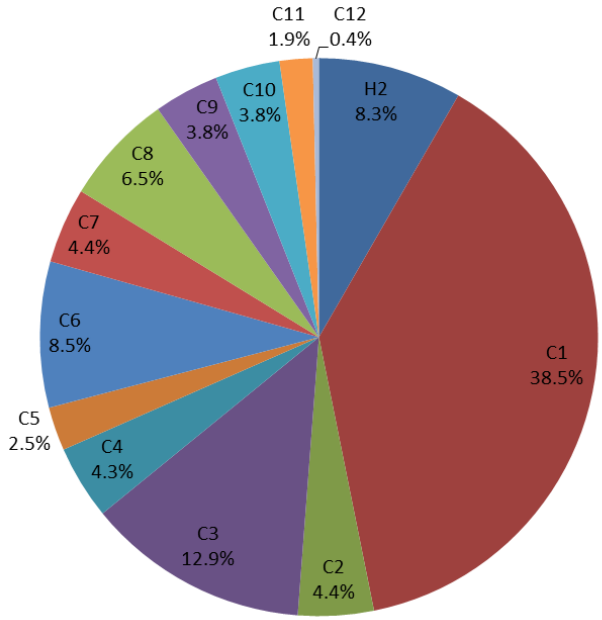

Figure 4-7. Percent of Energy in Syngas Sample 100% Construction Mix #2.

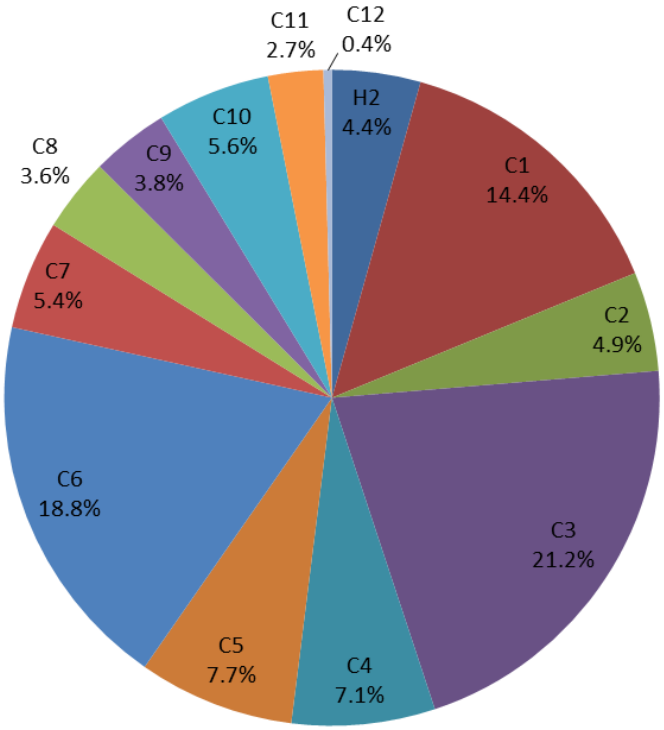

Figure 4-8. Percent of Energy in Syngas Sample 50% Food Mix #1.

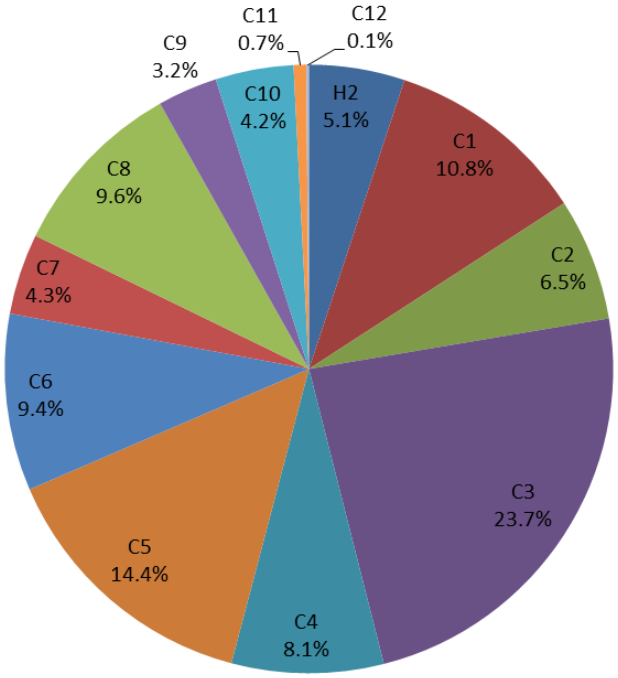

Figure 4-9. Percent of Energy in Syngas Sample 50% Food Mix #2.

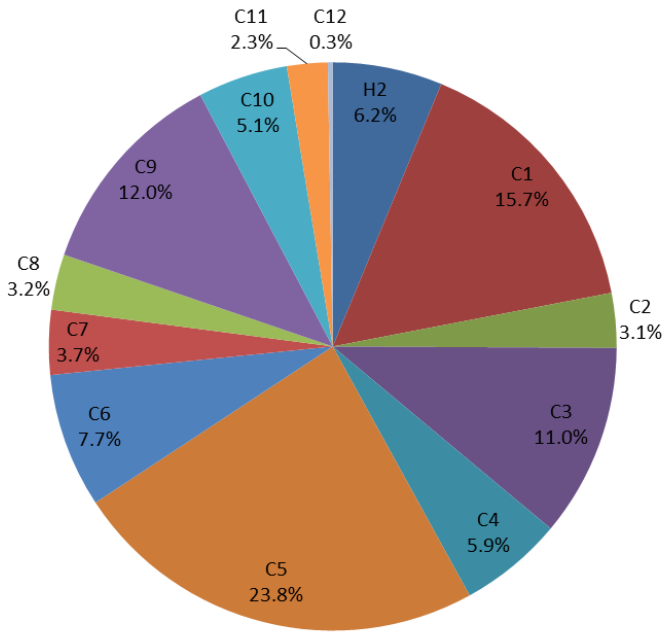

Figure 4-10. Percent of Energy in Syngas Sample 33% POL Mix #1.

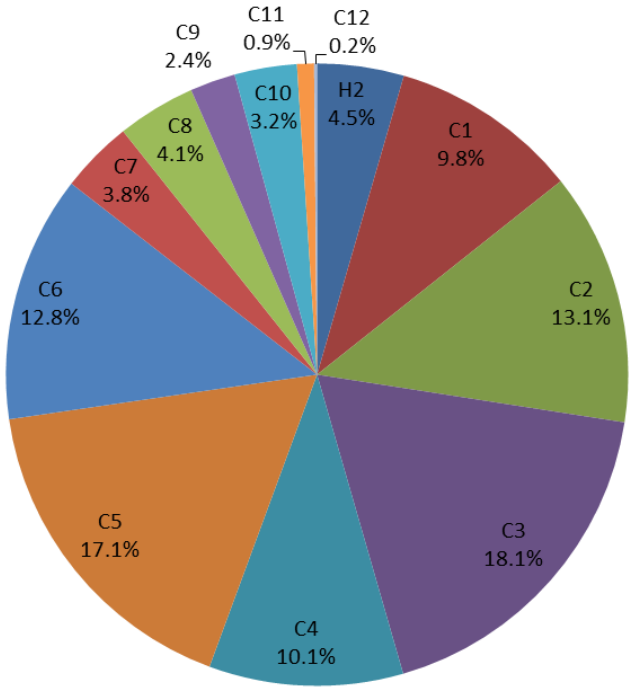

Figure 4-11. Percent of Energy in Syngas Sample 33% POL Mix #2.

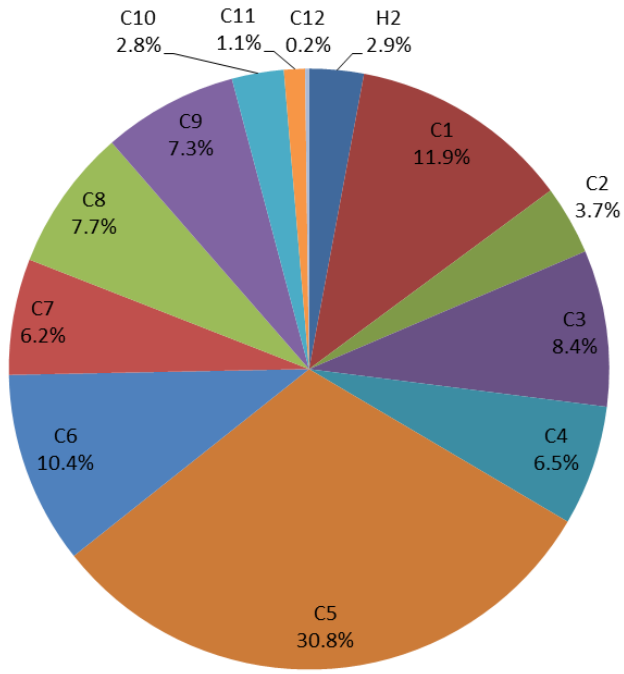

Figure 4-12. Percent of Energy in Syngas Sample 40% Tire Mix #1.

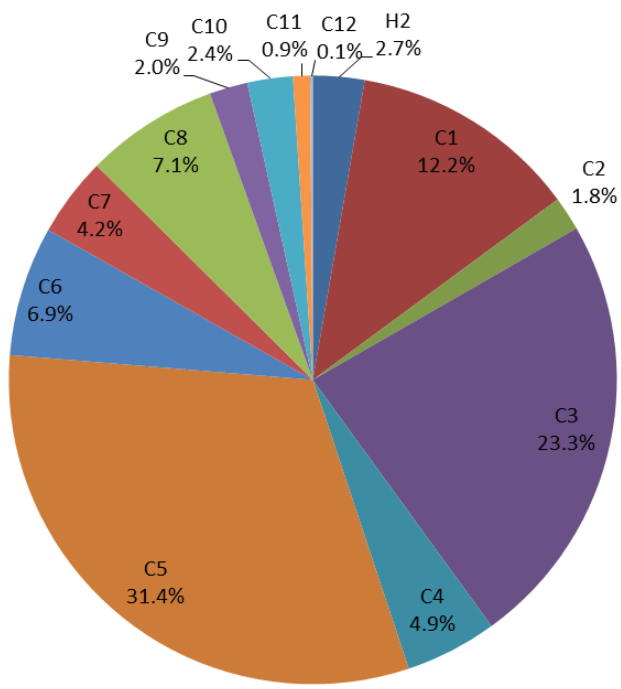

Figure 4-13. Percent of Energy in Syngas Sample 40% Tire Mix #2.

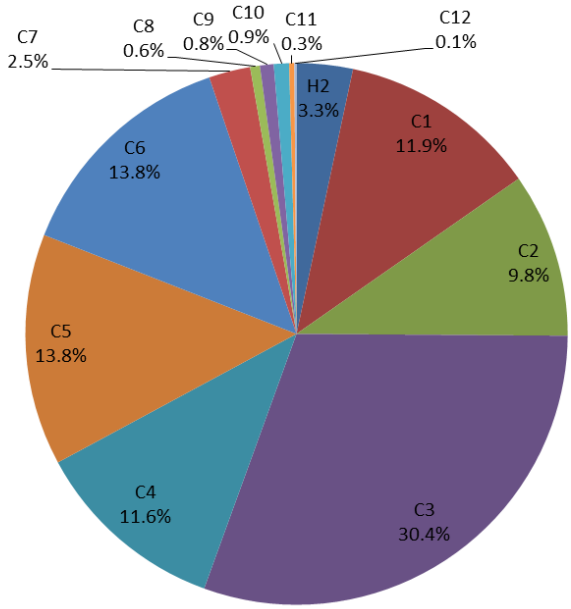

Figure 4-14. Percent of Energy in Syngas Sample 50% Plastics Mix #1.

4.7.5 Sampling of Residual By-products

There are four types of residuals generated as a by-product of the gasification process:

- Ash that is periodically removed from the main reactor
- Quencher oil
- Condensate which is generated through cooling hot syngas
- Polisher fluid (ethylene glycol and water)

Of these four, ash is the only inevitable, recurring residue – the inorganics in the waste stream become ash. Quencher oil begins as standard petroleum motor oil, but then becomes replaced over time by pyrolysis oils produced in the reactor. The pyro oils continue to perform tar removal from the syngas. Therefore the quencher oil would be replaced only when doing significant maintenance, and not routinely. Researchers determined that condensate can be eliminated by carefully managing system heat transfer to vaporize it, although it might be produced in transitory phases. Finally, the polisher (secondary scrubber) will occasionally have to be changed as it saturates with light fraction tars that get past the quencher.

Samples of each of these materials were sent to commercial labs to measure metals in the ash, and organics in the other three. The full analytical reports are attached as Appendixes B and C. Table 4-4 gives only the detects for Resource Conservation and Recovery Act (RCRA) total metals in four ash samples. Table 4-5 shows Toxicity Characteristic Leaching Procedure (TCLP) metals results for those same samples. Only three metals were detected via TCLP extraction, and these values were orders of magnitude below the limits for characteristic hazardous waste determination: Ba limit is 100 mg/l; Cr = 5 mg/l; and Pb = 5 mg/l.

Table 4-6 shows concentrations of selected Polycyclic Aromatic Hydrocarbons (PAHs) in the oil quench tank. These higher concentrations are expected because this is where almost all the

pyrolysis oils accumulate. As these oils accumulate, they are fed back into the gasifier for cracking.

Table 4-7 shows concentrations of BTEX compounds and total PAH in the polisher fluid. BTEX was selected because it was expected that lighter fraction organics would end up in this fluid. Note that the units for PAH concentration are three orders of magnitude lower than in the quencher oil

Table 4-8 shows concentrations of BTEX compounds and total PAH in condensate.

4.8 Thermodynamics Discussion

4.8.1 Syngas Condensate

The original design concept was to prevent the water-gas and water shift chemical reactions within Rotary Gasifier RG-103. The intent was to force all of the moisture entering the reactor with the feedstock to exit the reactor as superheated steam mixed with the syngas. Condenser C-107 cooled the gas as close to atmospheric temperature, essentially condensing 95% of the moisture in the syngas. This condensate was captured in condensate separator CS-108.

The original design concept works exactly as intended, but the following observations occurred:

1. The condensate water contained a high level of highly volatile “clean” (clear slight yellow color) organic liquids, which have a high vapor pressure and a strong odor.
2. The condensate water would separate in the wastewater tank after draining from the system. The top layer was highly flammable, with flammability similar to gasoline.
3. The condensate takes months to fully vaporize volatile organic compounds.

Researchers felt intentionally condensing this liquid creates a disposal problem and is not desirable.

To avoid creating this condensate, researchers were able to minimize condensate by reducing the speed of hydraulic motor M-4, which drives the cooling fan on condenser C-107. Heat exchanger HE-115 was added to heat the polishing liquid to the same temperature as the condenser discharge temperature. Excess liquid condensate was transferred into quencher QC-104.

Table 4-4. Total RCRA Metals in Ash.

Sample Date	Waste Feed	Sample ID	As (mg/ kg)	Ba (mg/ kg)	Cd (mg/ kg)	Cr (mg/ kg)	Ag (mg/ kg)	Pb (mg/ kg)	Se (mg/ kg)	Hg (mg/ kg)
4-Feb-2015	Long Term Mix	A-01-020415-1600	3.6	382	0.065	663	0.21	0.7	nd	nd
19-Mar-2015	Long Term Mix	A-01-031915-1600	3.3	350	nd	636	0.15	0.76	0.44	nd
2-Apr-2015	Constr. Mix	A-01-040215-1505	3.3	517	0.042	337	0.12	1.0	nd	nd
8-May-2015	Long Term Mix	A-01-050815-1600	1.9	351	nd	197	0.11	2.5	nd	0.011

Table 4-5. TCLP RCRA Metals in Ash.

Sample Date	Waste Feed	Sample ID	Ba (mg/l)	Cr (mg/l)	Pb (mg/l)
4-Feb-2015	Long Term Mix	A-01-020415-1600	3.2	nd	0.0040
19-Mar-2015	Long Term Mix	A-01-031915-1600	1.9	0.029	nd
2-Apr-2015	Construction Mix	A-01-040215-1505	3.7	0.015	0.0040
8-May-2015	Long Term Mix	A-01-050815-1600	3.8	nd	0.0074

Table 4-6. Selected PAH Concentration in Quencher Oil.

Waste Feed Type	Sample ID	Acenapthylene (mg/kg)	Fluoranthene (mg/kg)	Fluorene (mg/kg)	Naphthalene (mg/kg)	Phenanthrene (mg/kg)	Pyrene (mg/kg)	Total PAH (mg/kg)
Long Term Mix	OS-01-101514-0910	470	190	300	1,200		200	2,360
40% Tires Mix	OS-01-031815-1530	930	400	770	2,300	270	560	5,660
33% POL Mix	OS-01-042415-1600	1,400	410	590	3,600	1,200	580	8,856
Long Term Mix	OS-01-042815-1600	610	270	420	1,100		450	3,070
Long Term Mix	OS-01-050715-1630	980	610	590	1,200	410	750	4,830

Table 4-7. BTEX and PAH Concentrations in Polisher Fluid.

Sample date	Waste feed type	Sample ID	Benzene (µg/l)	Toluene (µg/l)	Ethylbenzene (µg/l)	m,p-Xylene (µg/l)	BTEX total (µg/l)	Total PAH (µg/l)
8-Oct-2014	Long Term Mix	P-01-100814-1120	18				18	
15-Oct-2014	Long Term Mix	P-01-101514-0910						20
22-Jan-2015	Long Term Mix	P-01-012215-0948	160	7.9		6.8	175	
30-Jan-2015	Long Term Mix	P-01-013015-0915						1,837
5-Mar-2015	50% Plastics Mix	P-01-030515-1557						160
13-Mar-2015	33% POL Mix	P-01-031315-1531	2,400	260		110	2,770	
1-Apr-2015	Long Term Mix	P-01-040115-1600	14,000	5,500	3,700	7,700	30,900	
6-May-2015	Long Term Mix	P-01-050615-1552	1,400	120		50	1,570	
13-May-2015	Long Term Mix	P-01-051315-1530						28

Table 4-8. BTEX and PAH Concentrations in Condensate.

Sample Date	Waste Feed Type	Sample ID	Benzene (µg/l)	Toluene (µg/l)	Ethylbenzene (µg/l)	m,p-Xylene (µg/l)	o-Xylene (µg/l)	BTEX, total (µg/l)	PAH total (µg/l)
15-Oct-2014	Long Term Mix	WW-01-101514-1120	320	11				331	
5-Mar-2015	50% Plastics Mix	WW-01-030515-1352							15
5-Mar-2015	50% Plastics Mix	WW-02-030515-1557							34
13-Mar-2015	33% POL Mix	WW-01-031315-1531	12	1.4			3.7	17	
19-Mar-2015	Long Term Mix	WW-01-031915-1600	1,500	240		75		1,815	
14-Apr-2015	40% Tires Mix	WW-01-041415-1640	1,800	890	450	300		3,440	
28-Apr-2015	Long Term Mix	WW-01-042815-1600							1,917
6-May-2015	Long Term Mix	WW-01-050615-1552	1,900	1,400	890	2,200		6,390	
7-May-2015	Long Term Mix	WW-01-050715-1600							2,188
20-May-2015	Long Term Mix	WW-01-052015-1500	670	87		55	160	972	

The following observations were the result of this change:

1. The cooling fan on cooler C-107 provides cooling to both the condenser and the main hydraulic drive system. Excessive slowing of the fan speed caused the hydraulic oil to overheat at temperatures above 135 °F.
2. The cooling fan on C-107 was reversed, to force heat from the hydraulic cooler into the condenser. This had a significant positive result on temperatures, but the fan vibrated excessively at certain speeds, limiting functionality.
3. Transferring condensate water from condensate tank CT-114 to quencher QC-104, allows water to form an emulsion with the pyrolysis oil. Reflux metering pump MP-117 doses this emulsion back into Rotary Gasifier RG-103 for reprocessing.
4. Organics mixed with the water either crack into hydrocarbon chains or vaporize into the syngas.
5. A portion of the water in the reflux cracks into hydrocarbons by the water-gas and water shift reactions. Additional thermal energy to sustain these reactions is provided by liquid organics (pyrolysis oil) partially burning with air in the burning char layer at 2200 °F.
6. Unreacted water exits as superheated steam.
7. All of the water in the feedstock can be processed without the formation of condensate when controlling the temperatures properly.
8. Additional condensate water from previous tests was pumped into quencher QC-104 for processing and disposal by thermal cracking. Numerous tests were conducted where there was negative condensate production from this practice.

Not all of the condensate water is cracked within the reactor, requiring excessive evaporation of this moisture into the syngas flow stream. The syngas exiting polisher separator PS-110 is saturated at the temperature of the polisher liquid. Heat exchanger HE-115 heated the polisher liquid to force the desired evaporation rate to maintain a net zero or negative condensate production rate. Excess condensate accumulated in condensate tank CT-114 due to the mechanical limitations of the system and was drained only when absolutely required.

Gas reheater RH-111 increases the temperature of the gas by 10 to 15 °F using heat from the engines cooling system. Adding heat locks the water vapor in the form of relative humidity. Condensation will not occur unless the gas temperature cools in downstream piping by 10 to 15 °F.

4.8.2 Dial-In Heating Value Adjustment

Metering pump MP-117 is infinitely adjustable up to the maximum operating speed. The heating value of the gas may be enriched by increasing the speed of the metering pump allowing additional flow of reflux into gasifier RG-103. The operators normally adjust the speed of the pump to maintain a constant liquid level in quencher QC-104. All of the oil condensed in Quencher QC-104 and some of the liquid water added from condensate tank CT-114 enters the reactor to be cracked into additional hydrocarbons. Adjusting the metering pump speed up or down allows the regulation of the heating value of the gas entering the engine.

4.8.3 Volume and Heating Value Adjustment

The HHV represents the gross energy in the syngas mixture. The heating value calculated from the GC-MS analysis was on a dry gas basis. Moisture creates numerous thermal loads in combustion, which reflects by the adjusted low heating value (LHV). The presence of water vapor creates the following issues:

1. Water vapor passes through the engine and discharges to atmosphere as a gas in the exhaust, displacing combustion air.
2. The density of water vapor is about half of syngas, small amounts of water vapor (by mass) greatly dilute the syngas mixture by volume.
3. Although latent heat of vaporization was added when evaporating this moisture into the syngas, the latent energy is not recovered in combustion since the engine exhaust discharges to atmosphere at high temperatures, preventing energy recovery by condensing (zero energy net gain or loss).
4. The combustion energy required to superheat the water vapor up to the combustion temperature creates an additional heat loss in the reactor.
5. Hydrogen (free or locked up in hydrocarbons) oxidizes to water vapor, where latent heat is not recovered.

Flow orifice FO-112 measures the mass flow of the mixture of syngas and water vapor entering the engine. Figure 4-15 represents a simplified method to adjust the heating value of the syngas (adjusted LHV) to compensate for the presence of water in the syngas mixture.

A psychrometric chart estimates the moisture content in the syngas on a mass basis. For example, if the temperature at TE-105 is 115 °F, the moisture content of the syngas on a mass basis is 07% (0.07 lbs of water per pound of syngas). Use Figure 4-15 to estimate the adjusted LHV due to the presence of water vapor in the syngas mixture. The adjusted LHV for the standard term mix would be 250 BTU/scf.

The gas flow measured by flow orifice FO-112 includes both water vapor and syngas. If the flow was measured to be 22 SCFM, the net adjusted gaseous fueling rate (LHV) entering the engine would be 250 BTU/scf * 22 SCFM * 60 min/hr = 330,000 BTU/hr.

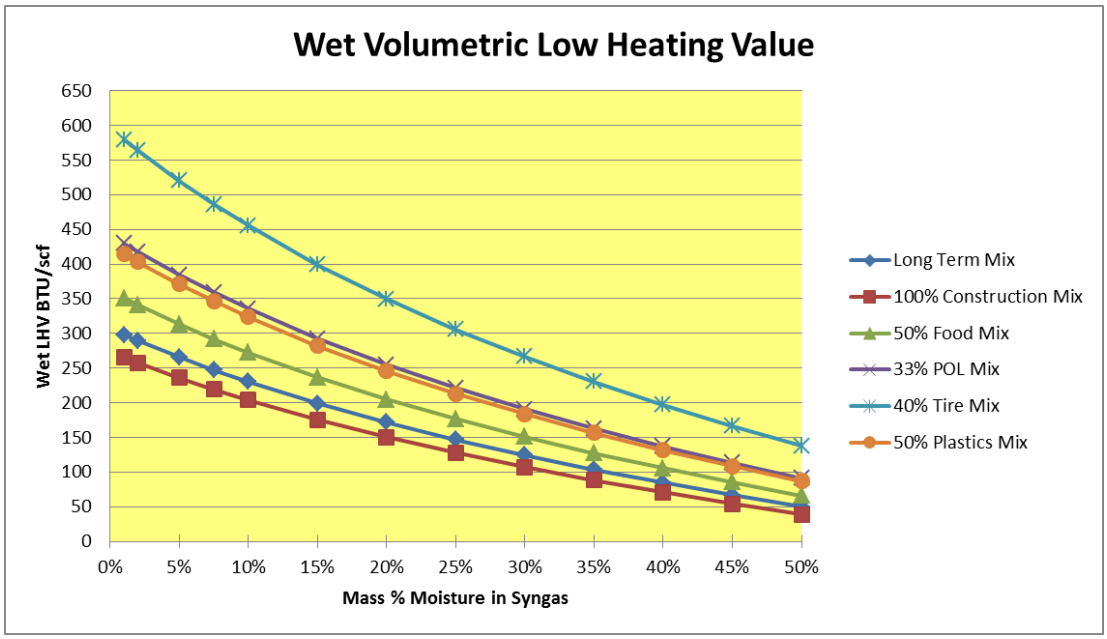

Figure 4-15. Moisture vs. Heating Value.

4.8.4 Loss of Thermodynamic Efficiency of Engine

Feeding syngas into the diesel engine results in a loss of thermodynamic efficiency as the engine transitions from a Diesel thermodynamic cycle to an Otto cycle with increasing gaseous fueling rate. Figure 4-16 estimates the loss in thermodynamic efficiency based on the gaseous fueling rate.

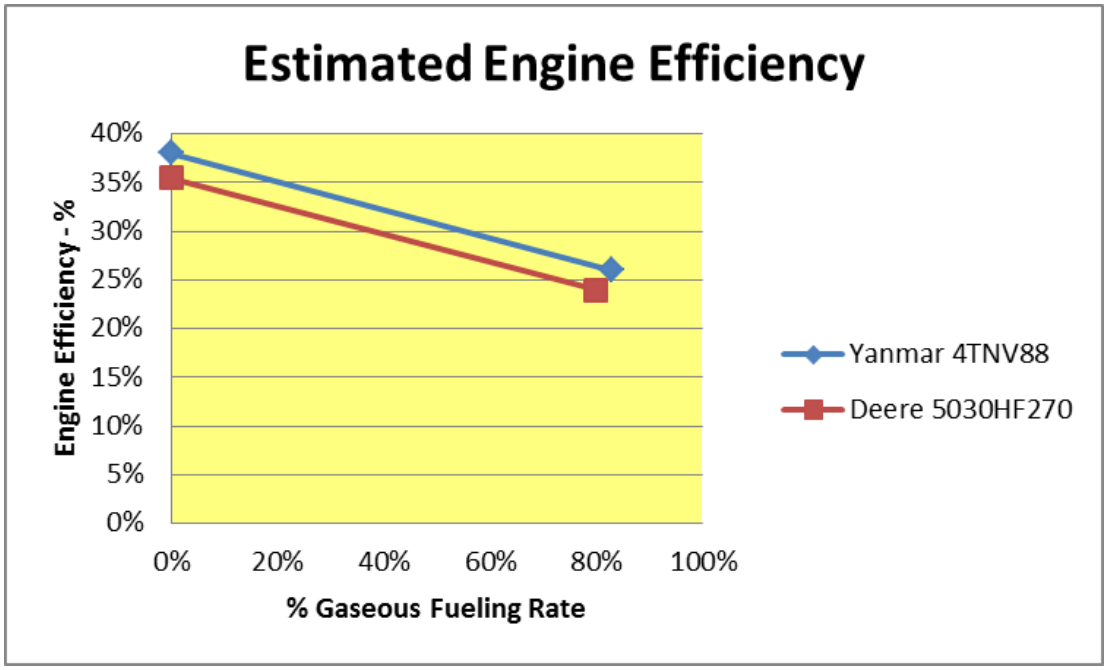

Figure 4-16. Estimated Loss in Engine Efficiency.

4.8.5 Thermodynamic Energy Balance Around Engine

Figure 4-17 shows the energy flow through the entire system.

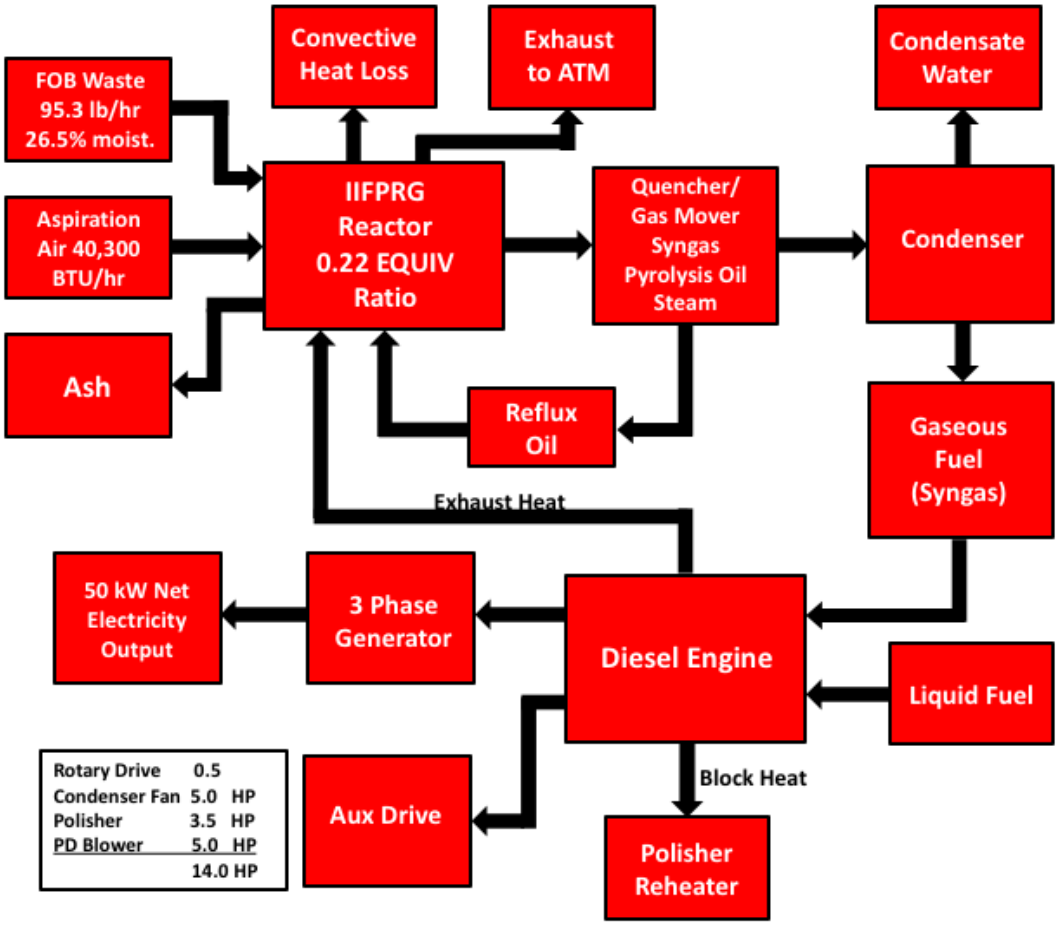

Figure 4-17. Energy Flow through the Entire System.

5. Development of the IIFPRG

The rotary gasifier (IIFPRG) uniquely combines the positive features of cross draft, updraft, downdraft, and indirect pyrolysis gasifiers into a single rotating unit. The gasifier is designed to process mixed and unsorted feedstock that can be dripping wet. Large inert items must be removed, but smaller inert items such as cans, glass, metals, soil, etc. simply pass through the gasifier and discharge with the ash.

The IIFPRG is designed to process plastics that have a low melting temperature, with little or no fixed carbon. The gasifier is not designed to operate on 100% plastics. Plastics must be mixed with other wastes to provide sufficient fixed carbon to sustain operation. The same issue applies when gasifying volatile liquids such as motor pool lubricants.

The gasifier rotates, causing a tumbling action that continually exposes fresh feedstock to the thermal reaction zone. This prevents clogging and passes inert materials out of the process. The design of the ram style feed system provides 70,000 lbs of hydraulic pushing force (up to 2,800 psi contact stress) to feed wastes into the gasifier without the blockages.

SUNY Cobleskill developed and engineered a complete trailer-mounted IIFPRG system to convert solid feedstock to electricity. The feedstock handling system delivers feedstock into the rotary gasifier and consists of a super-compression dewatering ram. The IIFPRG gasifier vessel, piping, and process components are constructed of carbon steel due to budget limitations (ideally, stainless steel would be used on a deployable system). The gas cleaning system consists of a unique oil based wet scrubber, an oil separator, a gas cooler/condenser, a condensate separator, and a gas reheater. The gas moving system consists of a variable speed positive displacement rotary lobe blower to deliver pressurized gas to either a combustion flare or to a 60 kW diesel engine-driven generator. The generator engine was slightly modified to allow the introduction of synthetic fuel gas (syngas) with the intake air.

5.1 Engineering of the IIFPRG

Researchers engineered the trailer-mounted IIFPRG prototype from January through April 2013. The following features were incorporated into the design:

1. The entire gasifier system fits on an 8 x 20-ft trailer.
2. The ram feed system compresses, densifies, and mechanically dewaters feedstock to less than 50% moisture content by squeezing in a one step process.
5. The outer fixed shell around the gasifier indirectly transfers heat from diesel engine exhaust into the rotating gasifier vessel.
6. The system maintains a 22-degree inclination angle based on AutoCAD layouts of the gasifier internals, char bed depth, and tumbling angle of repose.
7. The system uses refractory firebrick at the burning char zone (downhill end).
8. Thermodynamic heat balance ensures enough thermal energy exists to dry wet feedstock and fully volatilize within the gasifier.
9. The cyclone captures particulates from the syngas stream.
10. The water seal in the bottom of cyclone relieves any upset overpressure condition.
11. The all-in-one jet scrubber:

a. Cleans syngas of tars and particulates to allow use in an engine.
b. Fills with used motor pool lubricants.
c. Maintains fluid temperature of 220 °F to prevent steam from condensing out of the syngas.
d. Quenches syngas from > 800 °F to 210 °F.
e. Provides a liquid seal for flashback prevention and extinguish flaming fly embers (safety).
f. Cleans gas by high momentum exchange jet scrubbing using high pressure oil at 1,500 psi.
g. Incorporates internal recirculation to allow syngas to be cleaned multiple times before leaving vessel.
h. Gasifies spent scrubbing oil with feedstock.

12. Aspiration is forced by using positive displacement gas pump (rotary lobe blower) to deliver syngas to the engine without loss of engine power or efficiency.
13. All equipment is mechanically driven using hydraulic motors powered by the front power take off available on John Deere generator engines.
14. The three stage sandwich cooler is configured as follows:
    d. The (air intake) condenser cools syngas to within 20 °F of the ambient temperature to condense steam and lower dewpoint of the syngas.
    e. The hydraulic cooler cools hydraulic drive oil to less than 140 °F.
    f. The scrubbing oil cooler (fan with air discharge) cools scrubbing oil to 210 °F.
15. The gas reheater uses scrubbing oil heat to raise the syngas temperature 20 °F higher than the dewpoint (which lowers relative humidity to about 50%).
16. The system uses a 60 kW diesel engine-driven generator with the ability to accurately monitor liquid fuel usage.
17. The system employs a 0 to 60 kW load center to electrically load the diesel engine-driven generator at various loads.

5.2 Compression Dewatering

A student intern was assigned to research the ability to dewater various wastes using super-compression. Sixteen wastes were collected from the campus and analyzed for bulk density, moisture content, and proximate analysis.

Feedstocks with dramatic differences in physical properties were selected for compression dewatering. Water was added to each feedstock to obtain a moisture content of 80% (wet basis, 80% water, 20% solids). A modified hydraulic shop press was used to compress each feedstock using a piston / die. Various compressive stresses were tested to evaluate how much water could be mechanically removed. The results of this test are reported separately in Section 5.2 .

In summary, all of the feedstock types tested were mechanically dewatered to less than 50% moisture content (wet basis) at 1,800 psi compressive stress. Increasing the compressive stress to 4,000 psi only lowered the moisture content to less than 42%. Increasing further to 8,000 psi only lowered the moisture content to less than 38%.

Researchers decided to target a compressive stress of 1,800 psi to mechanically reduce the feedstock moisture content to less than 50% when entering the gasifier.

5.3 Gasification System Fabrication and Cold Testing

Fabrication of the complete trailer-mounted gasification system began in January 2013 and was completed in early May 2013 (Figure 5-1). Cold testing was conducted throughout the month of May, where numerous mechanical issues were identified and corrected. The scrubber (SC-105) was modified to incorporate a washed packed bed design developed by USMA Cadets. The USMA design used rolled stainless steel mesh as packing and vegetable oil as the wash liquid. Scrubber SC-105 was then filled with used cooking (vegetable) oil and fully tested at various gas flows up to the full design flow of 85 SCFM. Note: used cooking oil was replaced with used crankcase oil during hot testing in July 2013.

The entire gasification system is hydraulically powered using a hydraulic gear pump that is driven by a separate mechanical power take off located on the front end of the diesel engine. All hydraulic driven equipment immediately stops rotating when the generator stops.

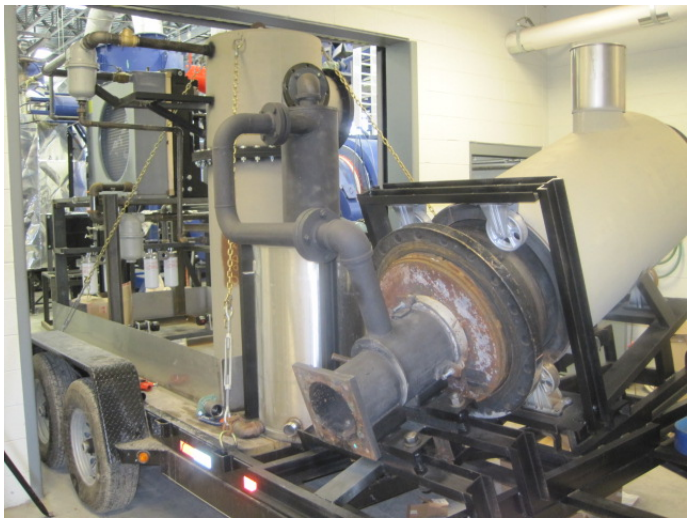

Figure 5-1. Gasifier Trailer during Fabrication.

The hydraulic system was fully commissioned during cold testing. Motors are controlled using 24 VDC dual coil hydraulic solenoid valves. Researchers found that the wrong hydraulic pump mount was provided on the engine block power take off, forcing the use of a gear pump that was 50% smaller than design. Budget limitations forced the following approach:

1. Positive displacement blower PDB-201 had to be electrically driven with a 3-phase variable speed drive. The blower was removed from scrubber SC-105 outlet and located on the ground about 75 ft from the gasifier trailer.
2. The hydraulic ram feeder RF-102 had to be powered by a separate gasoline engine.

Special hydraulic motors were purchased with high pressure seals that do not require case drains to relieve shaft seal pressure (when the system is designed with low hydraulic return pressure). All of the shaft seals began to leak within a few hours of cold testing, requiring the installation of separate case drains for all hydraulic motors and pumps. The seals were replaced on all of the hydraulic motors and pumps. The system was tested extensively after the installation of case drains and all seal failure problems were resolved before hot testing.

5.4 Feedstock Handling System

The feedstock handling system was constructed using a repurposed 35 ton hydraulic log splitter. The design had numerous problems that occurred during hot testing, forcing various mechanical changes. All problems have been resolved and the feedstock handling system currently works reliably as originally designed. Note that the feed system is driven by a small, external gasoline engine. This was done for expedience while testing. In a production version, the compression ram would be powered from the main system hydraulic pump.

The compression section was fabricated using a 6 x 6 x 24-in. stroke ram. Figure 5-2 shows the compression chamber and the end of the ram piston. Figure 5-3 shows the fabricated stainless steel feedstock hopper. Figure 5-4 shows the fabricated joint that is used to attach the hydraulic cylinder to the feedstock ram. A two-stage hydraulic pump (16:4 GPM) drives a 5-in. hydraulic cylinder. The ram is capable of pushing feedstock at a force of 70,000 lbs into the gasifier.

Figure 5-2. Six-in. Hydraulic Ram Piston and Compression Chamber.

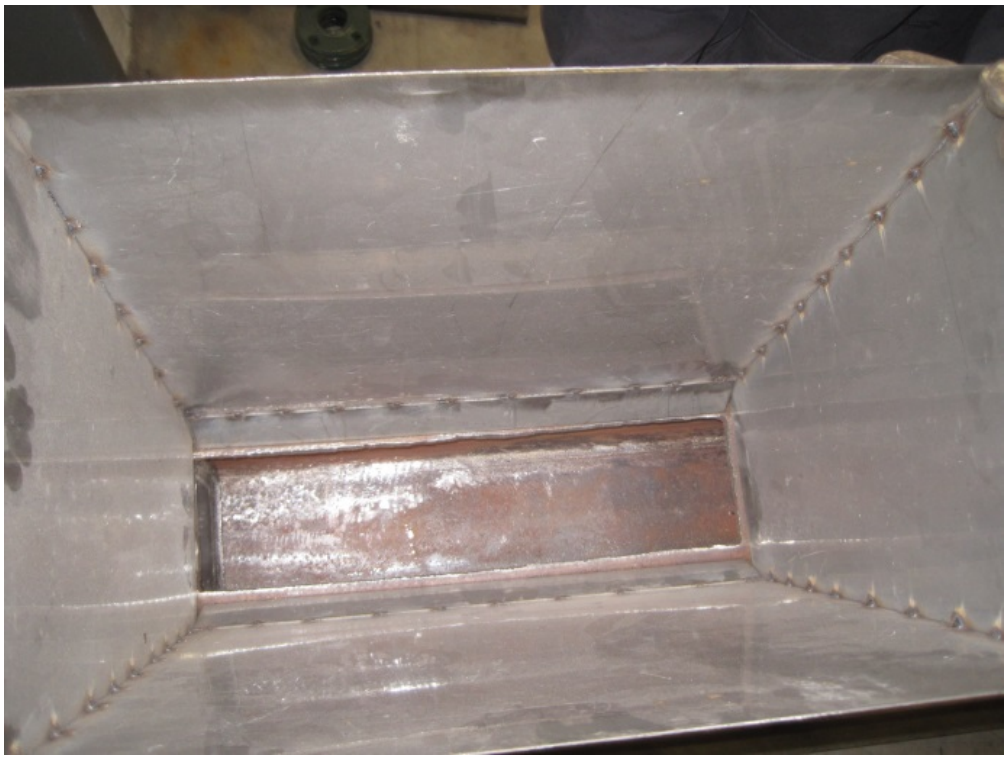

Figure 5-3. Feedstock Hopper.

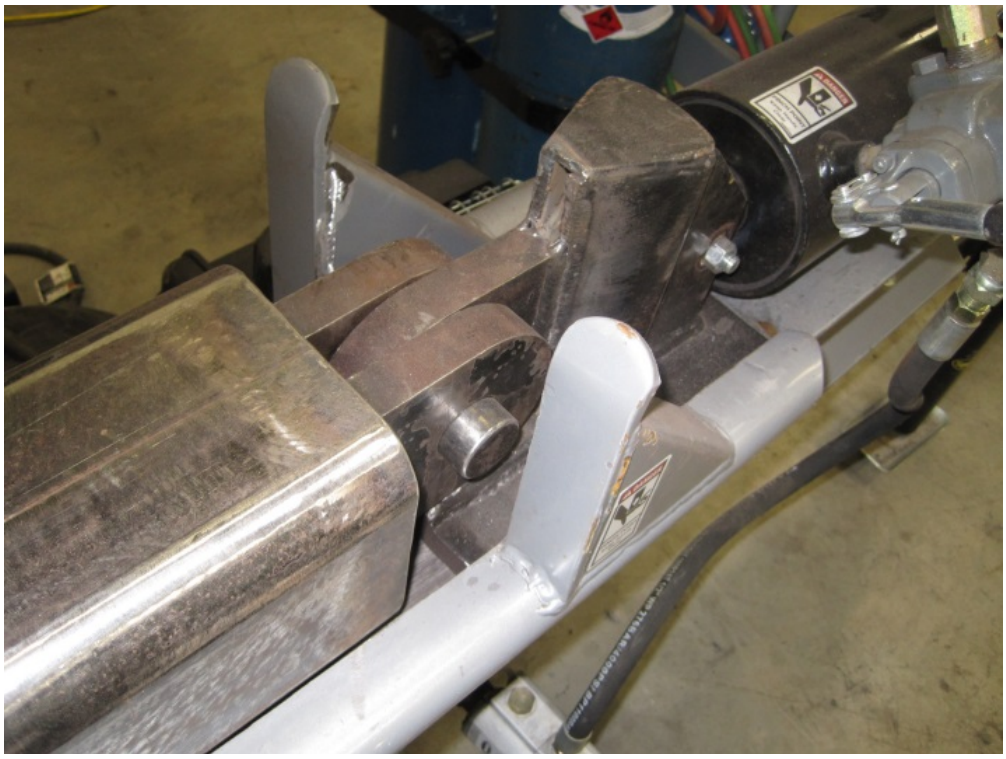

Figure 5-4. Thirty-Five Ton Feedstock Ram.

Originally, the ram was mounted at a 7-degree angle to allow feedstock water to freely drain by gravity as wet feedstock is compressed. This configuration required a 15-degree miter joint

(Figure 5-5), which became a significant problem during testing. Severe feedstock jamming occurred at the miter joint. This design was abandoned about a month into hot testing. The miter was eliminated and the feedstock system was mounted at the same inclination angle as the gasifier. Feedstock pushed directly straight up into the gasifier feed tube.

Figure 5-5. Miter Joint.

5.5 Feedstock Dewatering

A test was conducted in Sept. 2013 to determine if the ram feeder is able to dewater feedstock from 80% moisture content to less than 50% moisture content. A synthetic waste blend of dripping wet mixed paper and plastic at 80% was fed into the gasifier. Significant amounts of moisture was squeezed from the feedstock and drained. The moisture content was reduced to less than 50%. The system worked as designed and intended. Dewatering was also observed anytime when handling feedstock that has over 50% moisture content. Liquids freely drained from the compression chamber when processing dripping wet cafeteria waste.

Subsequent testing will focus on the effectiveness of feedstock dewatering using super-compression. Each feedstock will be tested using the ram feeder to determine moisture removal. Water will be captured and measured. Samples will be obtained and analyzed for moisture content by loss in weight. Data will be reported for each feedstock.

5.6 Hot Testing of the IIFPRG

Extensive hot testing commenced on 6 June 2013 and continued through 8 August 2013. Numerous technical problems occurred, preventing the system from operating at any level of steady state conditions. Each problem was addressed as it occurred. Numerous tests were attempted during this timeframe. Each test had a significant process or mechanical problem, preventing the system from ever reaching the steady state conditions necessary to obtain adequate data to meet project objectives.

Data was recorded for the majority of runs during the hot testing period. All available resources were dedicated to troubleshooting problems and ensuring safe operating conditions for the researchers working on the equipment.

The main problems experienced during hot testing were:

1. Rotary gasifier drive jamming and breakage
2. Overfilling the gasifier with feedstock
3. Nonflammable syngas at the flare
4. Feedstock jamming in the feed pipe.

5.6.1 Overfilling the Gasifier with Feedstock

5.6.1.1 Resulting Problems

The low inclination angle (22 degrees above horizontal) of the gasifier vessel did not allow unreacted feedstock to properly tumble downhill and adequately fill the reactor vessel. Excessive unreacted feedstock accumulated on the uphill end of the rotary vessel, consistently covering the gas exit point. The slightest amount of overfeeding caused the gas exit pipe to plug with unreacted feedstock, resulting in excessive vacuum within the downstream equipment. Blockages required the gasifier to be emptied and completely disassembled. Blockages of the syngas exit piping occurred almost every time the gasifier was operated.

Figure 5-6. Rotary Chain Drive.

Excessive vacuum sucked the safety water seal located on the bottom of the cyclone into the scrubber vessel, creating a dangerous situation by allowing air to enter the system. The water seal was replaced with a blank flange to correct this safety issue.

The gasifier required blind operation. Feedstock level within the gasifier vessel was impossible to determine. A magnetic material level sensor was developed to monitor feedstock level from the uphill end. This device was complicated, provided false indications, and promoted overfilling problems.

5.6.1.2 Attempted Corrective Action

The location of the gas exit port was moved to the furthest top uphill location. Three different port geometries (Figure 5-7) were fabricated and tested to force gas removal at the far uphill corner of the gasifier at the lowest gas velocity possible at the entrance point. A helical lifter (Figure 5-8) was added to help push unreacted feedstock downhill in the cylindrical reactor vessel. The helical lifter plate caused excessively high torque and jamming problems. These modifications did little to correct the problems.

Figure 5-7. Various Syngas Exit Nozzle Geometries Tested.

Figure 5-8. Helical Lifter Uphill of Brick.

5.6.2 Gas Burning Within the Gasifier Vessel

5.6.2.1 Resulting Problems

Air leakage into the reactor vessel caused a portion of the flammable gas generated to burn before exiting the reactor vessel. The flammability of the gas at the flare was weak or in most cases not flammable. Syngas samples were taken only when observing the highest levels of flammability in the combustion flare.

Air was observed to enter the reactor vessel through a rat-hole that formed at the top sector of the burning char bed between 10:00 and 2:00 o'clock positions. This "rat-hole" formed due to insufficient feedstock in the top portion of the rotary reactor that resulted from the low 22-degree inclination angle of the reactor vessel. Air was also observed to enter the reactor vessel and burn gas through the material feed pipe.

5.6.2.2 Attempted Corrective Action

Changing the inclination angle of the rotary vessel was a major modification and was not attempted during the summer hot testing period. Changing the rotational speed of the reactor vessel helped to control the rat-hole issue within the burning char bed. Speeds over 1 RPM quickly promoted the combustion of syngas within the gasifier vessel. The optimum speed was determined to be less than 0.5 RPM.

Various attempts to form an adequate char bed at startup were tested, which included wood char, charcoal, wood pellets, and anthracite coal. The use of this feedstock addressed the problem during startup, but the rat-holes returned after the initial charge was consumed. Using these materials for starting was not deemed practical for military applications. Other attempts including reversing the rotary drive direction multiple times per minute, increasing the rotational speed to 6 rpm, and adding a helical lifter to help move feedstock downhill did little to correct the problem.

5.6.3 Feedstock Jamming Within the Feed Pipe

Problems: Feedstock jammed within the feed pipe preventing the flow of fresh feedstock into the reactor vessel when using 70,000 lbs of pushing force. This was an ongoing problem throughout the summer hot testing period. The feedstock handling system worked fine when the system was cold, but consistently plugged when the system became hot.

The system was crashed stopped and opened to observe problems. Internals were inspected with a custom video camera. Large super-compressed briquettes (sausages) formed within the feed pipe and became rock hard with reactor heat. These briquettes created endless mechanical problems and did not readily gasify.

Blockages formed at the discharge end of the feed pipe at the uphill end of the gasifier. This caused a wedging action that progressively compacted the material for the entire length of the feed pipe. Blockages were nearly impossible to remove mechanically. Special tools were developed to allow boring and drilling to remove blockages. Hard blockages were also caused by the rubber sleeved pinch valve.

Attempted Corrective Action: Numerous tests were conducted on varying feedstock type, size, and preparation methods. Smaller amounts of feedstock per pushing cycle helped, but blockages remained a problem. A smaller ram and insert (5 x 5-in.) was fabricated to increase the pushing stress and to minimize compaction size. This change significantly helped, but blockages remained an ongoing problem. Both the ram and sleeve were modified numerous times with some positive effect.

A rubber sleeved pinch valve was installed to minimize air leakage through the material feed pipe. This rubber sleeve of this valve was partially burned as unreacted feedstock burned down the feed pipe overnight. The fire within the rubber sleeve caused the inside surface to become excessively rough. Feedstock continually jammed in the pinch valve regardless of the sleeve pressure, requiring the valve to be removed.

5.7 Corrective Action to the IIFPRG System in 2013

Significant ongoing problems occurred during early testing. Principal Investigator (Stephen Cosper) decided to stop all testing and execute a major corrective action plan to permanently resolve the ongoing problems.

The modifications consisted of:

1. Increase the inclination angle of the gasifier from 22 to 40 degrees (Figures 5-9 and 5-10).
2. Replace entire rotary gasifier drive with a torque tube line shaft drive, slip clutch, and all new gearboxes.
3. Modify the internals of the gasifier.
4. Shorten the feed pipe and inject feedstock directly into the reaction zone.
5. Install thermocouples at varying locations near the feedstock feed point to monitor the charge level within the gasifier.
6. Connect diesel exhaust to heat rotary shell. Insulate gasifier vessel to minimize heat losses.

Figure 5-9. Feedstock Handling System at 22-Degree Inclination.

Figure 5-10. Feedstock Handling System and Gasifier at 40-Degree Inclination.

5.7.1 Increase the Inclination Angle of the Rotary Gasifier from 22 to 40 Degrees

Researchers did full scale layouts of the rotary gasifier internals using AutoCAD to determine the optimum inclination. A minimum angle of 40 degrees was determined based on the desired char bed depth at the 12:00 position and the tumbling angle of repose. Increasing the angle above 45 degrees would reduce or even stop the tumbling action.

Hinges were added to the downhill end of the gasifier to allow the adjustment of the gasifier inclination angle. The angle was increased to 40 degrees, requiring reworking of the discharge piping and the feedstock handling system. Stabilizing jacks on the corners of the trailer allow further adjustment of the inclination angle from 36 to 44 degrees by tilting the entire trailer up to 4 degrees.

Increasing the angle resolved all problems with feedstock flow within the gasifier. The problem of “rat-hole” formation on the top segment of the burning char zone was resolved and feedstock freely tumbles downhill.

5.7.2 Replace the Rotary Gasifier Drive

The entire rotary gasifier drive and support platform was replaced with a line shaft drive. All chain drives were removed, eliminating the problems with excessive chain forces at high torque. The rotary gasifier was modified with a shaft drive to provide pure rotational torque free of dislodging forces (common to chain and gear drives).

Three new gearboxes were used to provide a drive reduction of 8750:1. The new drive allows the gasifier rotational speed to be varied from 0.15 to 0.5 RPM. An automatic slip clutch was added to limit the rotational torque on the rotary gasifier to 1,400 ft-lbs. A safety shear pin was added at the gasifier connection. All drive train components are rated for the maximum allowable drive torque. This change resolved all rotational drive problems. The rotational speed of the gasifier can be varied by simply adjusting the hydraulic flow control valve to hydraulic motor M-1

(Figure 5-11). The torque limiting clutch was adjusted and tested to slip as designed without damaging components.

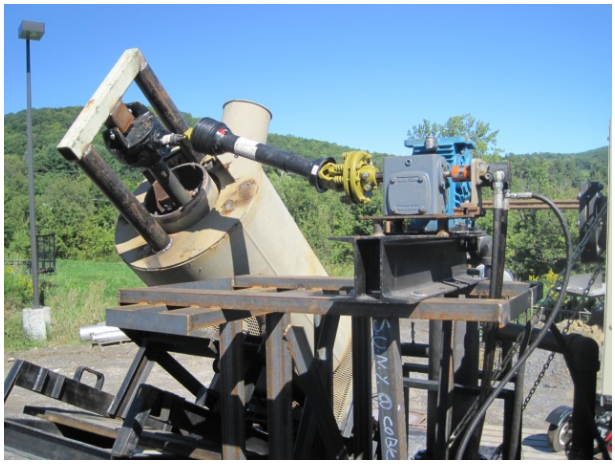

Figure 5-11. Hydraulic Rotational Direct Drive.

5.7.3 Modify the Gasifier Internals

The downhill end of the gasifier was cut off using a plasma torch to expose the fire brick. Mortar was not used, allowing the top brick fall down and creating a path for air to leak behind the brick and burn syngas within the gasifier vessel (Figure 5-12). Researchers felt there was no way to reliably resolve this problem and all brick was removed from the gasifier. The internals of the gasifier were modified using fabrications to replace the function of the brick. Various major internal modifications were made to the gasifier during September 2013 to remove all pinch points that could raise torque, causing problems with gasifier rotation. The gasifier was welded closed and the fixed downhill spring plate was modified to control the path of combustion air flow. These changes were a success. All subsequent testing from 19 September provided high and consistent gas flammability without any sign of gasifier jamming or high drive torque conditions.

5.7.4 Shorten the Feed Pipe

The entire feed pipe assembly was modified. The feed pipe was shortened by 75%, which significantly reduced the distance feedstock must be pushed by the ram feeder. The feed nozzle was modified to force feedstock to the bottom half of the rotating gasifier vessel. This change eliminated the formation of rock hard briquettes within the feed pipe.

This change also resolved all feedstock blockage problems in the feedstock handling system and corrected the safety issue of air leakage into the gasifier with feedstock. Any air that leaks into the gasifier with the feedstock is consumed immediately by combustion. This change greatly increases the overall safety of the system. The use of nitrogen during startup was no longer required and the gasifier no longer puffs due to overpressure during operation.

Figure 5-12. Problem of Dropping Brick.

The design of the gas outlet pipe was also changed. All pinch points that could cause feedstock wedging were removed. Changes allowed feedstock to freely tumble without obstructions downhill within the gasifier. This change resolved all problems with high rotational torque that had been caused by feedstock jamming between the stationary pipe and rotating reactor vessel.

5.7.5 Install Thermocouple Wells on the Feed Pipe to Determine Charge Depth

Four thermocouple wells were added to the feed pipe monitor the level of feedstock charge at various points within the gasifier. These thermocouples provide a temperature profile to determine the level of feedstock charge within the gasifier. Fresh and drying feedstock drives the temperature to less than 230 °F. Thermocouples that read significantly less than the discharge temperature are covered by feedstock. Thermocouples that read similar to the discharge temperature are not covered with feedstock. This change allowed researchers to use instrumentation to determine the level of charge within the gasifier. All problems related to overfeeding the gasifier and plugging the syngas exit pipe with feedstock were resolved.

5.7.6 Connect Diesel Exhaust to Provide Indirect Heat to Rotating Gasifier Shell

The outer stationary gasifier shell was cut open to allow the use of a thermal imaging camera to evaluate the temperature profile on the gasifier shell (Figure 5-13). Lower than expected temperatures were observed. The cut-out was installed with hinges to allow the use of future thermal imaging. The door can be opened anytime during operation to obtain thermal images of the rotating shell. The entire gasifier was insulated with 2-in. of mineral wool insulation. The insulation was covered with stainless steel cladding (Figure 5-14). Piping was added to provide hot diesel exhaust to the outside of the rotary gasifier shell. Hot diesel exhaust enters the gasifier at 900 to 1000 °F and exits to atmosphere at about 500 °F (Figure 5-15). The conduction of heat indirectly through the gasifier shell provides substantial energy to dry wet feedstock. A significant performance improvement was observed with this change. A highly flammable gas

was produced within 15 minutes after lighting the gasifier. The gas flammability was consistent throughout the entire test.

Figure 5-13. Thermal Imaging Cut-Out on Stationary Outer Shell.

Figure 5-14. Gasifier Fully Insulated with Stainless Steel Cladding and 65-kW Generator, Exhaust Connected to Shell

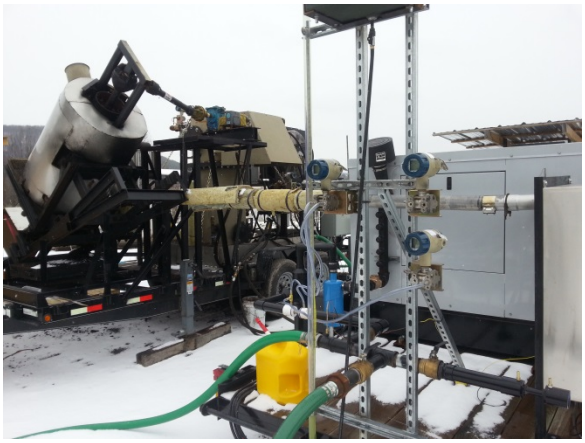

Figure 5-15. Sixty-kW Generator Exhaust Connected to Gasifier.

5.8 Summary Operations after 16 September 2013

The modifications were completed and testing continued from 16 September through 21 November 2013. The system currently works as follows:

1. The use of nitrogen during startup is no longer required.
2. No safety issues or concerns have occurred.
3. The gasifier starts on any feedstock. No special starting stock is required.
4. The gasifier ignites with a hand torch (Figure 5-16). The torch flame is licked into the gasifier to ignite feedstock. A burning char bed naturally forms within 15 minutes.
5. Flammable syngas is observed within 15 minutes of ignition. The flare ignites and sustains combustion at the flare.
6. The combustion at the flare is consistent throughout the operation. The gas burns directly on the water, indicating sufficient heating value to operate an engine.
7. No noticeable change in syngas flammability at the flare throughout operation.
8. All feedstock handling problems have been resolved. The system has handled woodchips, , plastic, rubber, and cafeteria waste without any malfunction or technical problems.
9. The rotary drive operates reliably and all jamming problems are resolved.
10. All problems related to air leaking past the burning char zone ("rat-holes" and brick stability) and combusting syngas within the gasifier have been resolved.
11. Optimum performance occurs at a gasifier rotational speed of one rotation in 3 minutes.
12. The burning char bed consistently runs between 1,900 and 2,200 °F on the far downhill end of the gasifier.
13. The gasifier was able to process any feedstock fed into flammable gas without any technical problems. Feedstocks tested include dripping wet cafeteria waste, rubber, office paper, cardboard, catalogs, plastic bags, packaging, and pellets, mixed wood chips with excessive shavings and fines.

Figure 5-16. Lighting Gasifier with Hand Torch.

5.9 Permitting Issues

Currently the IIFPRG is operated at SUNY Cobleskill under a research and development (R&D) permit with the New York State Department of Environmental Conservation (NYDEC). In a

contingency environment, technically there are no environmental regulations or permitting relevant. However, the research team acknowledges that for longer scale testing and demonstration purposes in the Continental United States (CONUS), the gasifier will need to fall under the appropriate regulatory regime. The difficulty arises because small scale WTE and gasification systems are rare. Consequently, there are no clear cut regulatory definitions or categories that apply. Further, because the IIFPRG is unique, there is literally no precedent. Added to that, each state (and each potential site) would have different criteria (e.g., pollutant).

Therefore, to scope the environmental permitting likely to be required, the research team is taking the approach of figuring out what would be required to permit the gasifier for a demonstration in the state of New York, even though there are currently no plans to do so. Consultations with an NYDEC engineer on specific requirements are ongoing.

A permitted site would require solid waste handling and air pollution permits, possibly wastewater discharge permits. The waste and water permits should be pro-forma exercise, but the air permit will likely be the more challenging. The primary emission point will be the diesel engine exhaust.

An air permit in NY would incorporate NSPS rules for stationary internal combustion engines. A portable generator on a trailer becomes stationary if parked at the same location for more than 12 months. CFR Title 40, Part 60, Subpart IIII, Standards of performance for stationary compression ignition (diesel) internal combustion engines (CI ICE), requires that any modified engine subject to this subpart must meet the emission standards applicable to the model year, maximum engine power, and displacement. Therefore, the gasifier modified engine it must still meet the same specifications as the initial manufacturer.

As a point of reference, a commercial biomass gasifier in NY (154 MMBTU/hr turbine) was recently permitted. The emissions are regulated for PM, opacity, Cd, Pb, Hg, SO_2, HCl, dioxin/furan, NO_X, and CO. This is of course a very large stationary power generator. There were several emissions points, but the primary is the turbine output, which also is the same stack that exhausts the flare and startup boiler emissions.

6. CFD Modeling

6.1 Methodology

The goal of this work is to use CFD simulations as a tool that provides an insight into thermal and chemical conversion of waste as it travels through the gasifier and effect of hydrodynamics on these processes. Several species were considered as waste, wood chips at the beginning, and later on plastic (cafeteria waste). CFD analysis will be able to predict the syngas composition and temperature in rotating bed gasifier close to collected experimental data. The CFD model will help to understand the effect of operating parameters like pressure, temperature, flow rates, mixing, and waste content on syngas composition. Over the years, many such studies are published in the literature [1-8]. However they do not address large scale gasifiers, which require superior computational power due to the large amount of cells in the mesh.

This work was able to mesh the gasifier with less than 1 million cells, which is enough to provide accurate results. One of the most important tasks in performing numerical simulations for gasification process is the evaluation of species concentration during devolatilization process. In this work, species were evaluated as a result of devolatilization, referred to as volatile break-up, and developed using step by step conversion of the elements in volatile into the species concentrations.

This approach conserves the mass of each of the elements as well as overall heat content in the solid fuel during this conversion. It was assumed that that the volatile material from the solid fuel consists of Carbon (C), Hydrogen (H), Oxygen (O), Nitrogen (N), and Sulfur (S). Other constituents (like Chlorine) exist in very small amount and therefore are neglected in this approach. Volatile matters from solid fuel are initially converted to a pseudo gas phase species, referred to as “volatile” using a devolatilization model. A gas phase volatile break-up reaction, R1 is added to convert this gaseous volatile to several other gas phase species. Species TAR is another pseudo gas phase species added to account for left over carbon from the volatiles, if any. Step by step approach is developed to evaluate the mass fractions of resultant species. Stoichiometric coefficients a, b, c, d, e, f, g, and h for the resultant species are calculated from the obtained mass fractions and molecular weights of these species. Using current approach, a SCHEME script is written to automatically calculate stoichiometric coefficients of volatile break-up reaction and setup the gasification simulation in ANSYS FLUENT (ANSYS. 2014).

$$\text{Volatile} \rightarrow a\ CO + b\ H_2S + c\ CH_4 + d\ H_2O + e\ H_2 + f\ N_2 + g\ TAR \qquad (R1)$$

This script in the form of add-on module is referred to as “Gasification calculator.” Heating value of species, *Volatile* is obtained by first converting as-received heating value of cal to its lower heating value and then subtracting the lower heating value of fixed carbon (Char) from it. Latent heat of water vapor formed from moisture content and hydrogen is considered appropriately while converting as-received heating value of waste (wood) to its lower heating value. A three dimensional CFD solver ANSYS FLUENT 14.5 is used to solve a set of governing equations for the gas phase and the solid phase. RANS based mass, momentum, turbulence, energy and species conservation equations are solved in Eulerian reference frame for the transport of gas phase.

Solid-particles/droplets are tracked using Lagrangian reference frame referred to as Discrete Phase Model (DPM) [9].

The entire gasification process will be broken up on the following sub processes:

- Inert heating of the fuel from initial temperature to the vaporization temperature
- Release of moisture from the fuel
- Devolatilization and tar cracking
- Char combustion and gasification
- Inert heating of ash.

Inert heating will be taken care by inbuilt inert heating law. Moisture release will be taken care by wet combustion model. For devolatilization, FLUENT allows only one species as the devolatilizing species. However, in actual case different species are evolved during devolatilization. This can be taken care by defining a pseudo species as a devolatilizing species and then breaking up this species into required composition of species using a volumetric reaction (volatile break-up reaction). Different gas phase reactions (R2-R7) will be defined as volumetric reactions. Other heterogeneous reactions (R8-R11) taking place during char combustion and gasification will be defined as particle surface reactions once the multiple char reactions model is enabled.

- CO combustion (R2)
  $CO + 0.5\ O_2 \rightarrow CO_2$
- Water-gas shift (R3)
  $CO + H_2O \rightarrow CO_2 + H_2$
  $CO_2 + H_2 \rightarrow CO + H_2O$
- H_2 combustion (R4)
  $H_2 + 0.5\ O_2 \rightarrow H_2O$
- CH_4 combustion (R5)
  $CH_4 + 1.5\ O2 \rightarrow CO_2 + 2\ H_2O$
- CH_4 reforming (R6)
  $CH_4 + H_2O \rightarrow CO + 3\ H_2$
  $CO + 3\ H_2 \rightarrow CH_4 + H_2O$
- Tar combustion (R7)
  $TAR + CO \rightarrow n\ CO_2$
- Char oxidation (R8)
  $C<S> + O2 \rightarrow CO_2$
- CO_2 gasification (R9)
  $C<S> + CO_2 \rightarrow 2\ CO$
- H_2O gasification (R10)
  $C<S> + H_2O \rightarrow CO + H_2$
- H_2 gasification (R11)
  $C<S> + 2\ H_2 \rightarrow CH_4$

6.2 Model Setup

The model is developed and ready to be applied on the right gasifier geometry (Figure 6-1)). This work built and meshed the geometry several times due to significant design changes (Figure 6-2). This delayed the simulation analysis. Since the design is complex, it was not possible to use automatic meshing procedure, so gasifier had to be decomposed on parts with simple geometry that could be meshed manually to receive good quality mesh (orthogonal quality > 0.1) (Figure 6-3). To ensure more accurate results, it was decided to use a 360-degree geometry despite the increase in the number of cells (Figure 6-4). The final design and corresponding mesh are shown on Figures 6-5 and 6-6. The small gap (0.08-in.) between rotating and nonrotating plates that allows entering small amount of air will also be incorporated in the model (Figure 6-7). To reduce time of calculations, the model did not include the external big pipe that surrounds the gasifier and keeps it heated. The heat flux is calculated separately and will be applied as boundary conditions on the walls. The feedstock is treated as porous material with 25% porosity. It will be introduced as feed inlet with injection rate of 0.018 kg/s. As results the model will provide contours of mass fractions of syngas main species and evaluate the temperature in different part of gasifier.

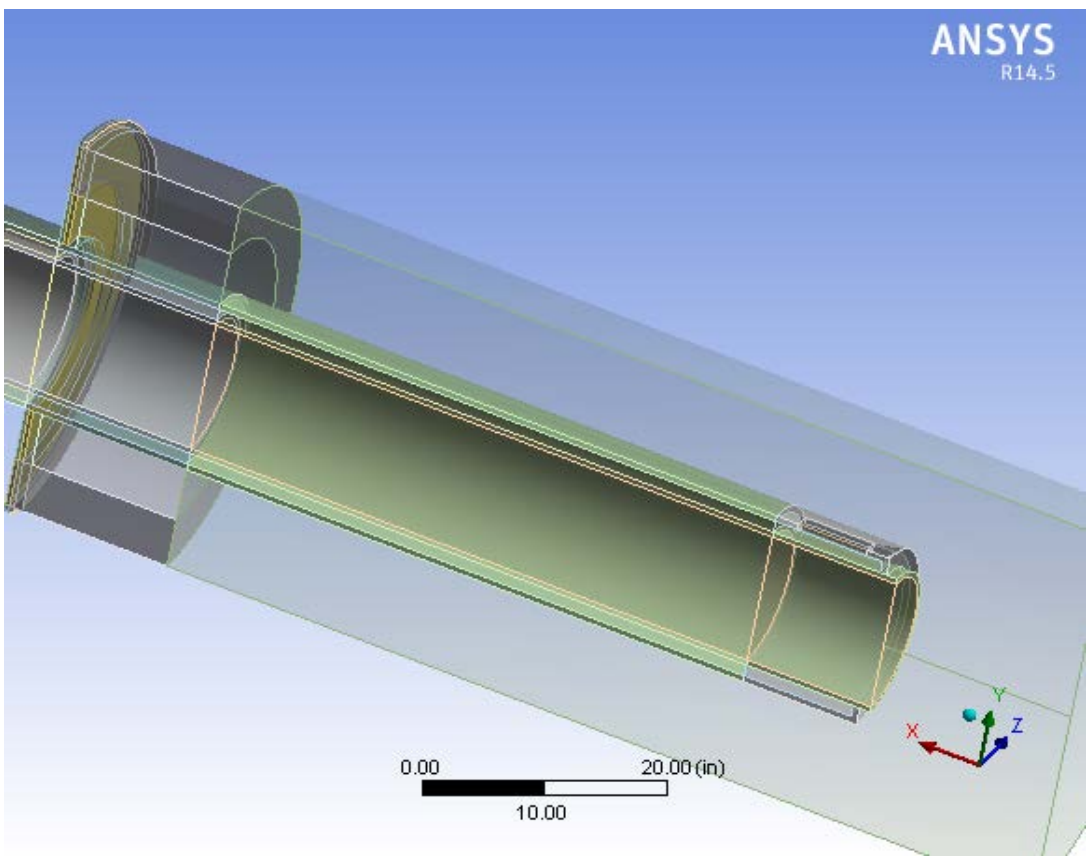

Figure 6-1. Geometry of the Initial Design Requirements.

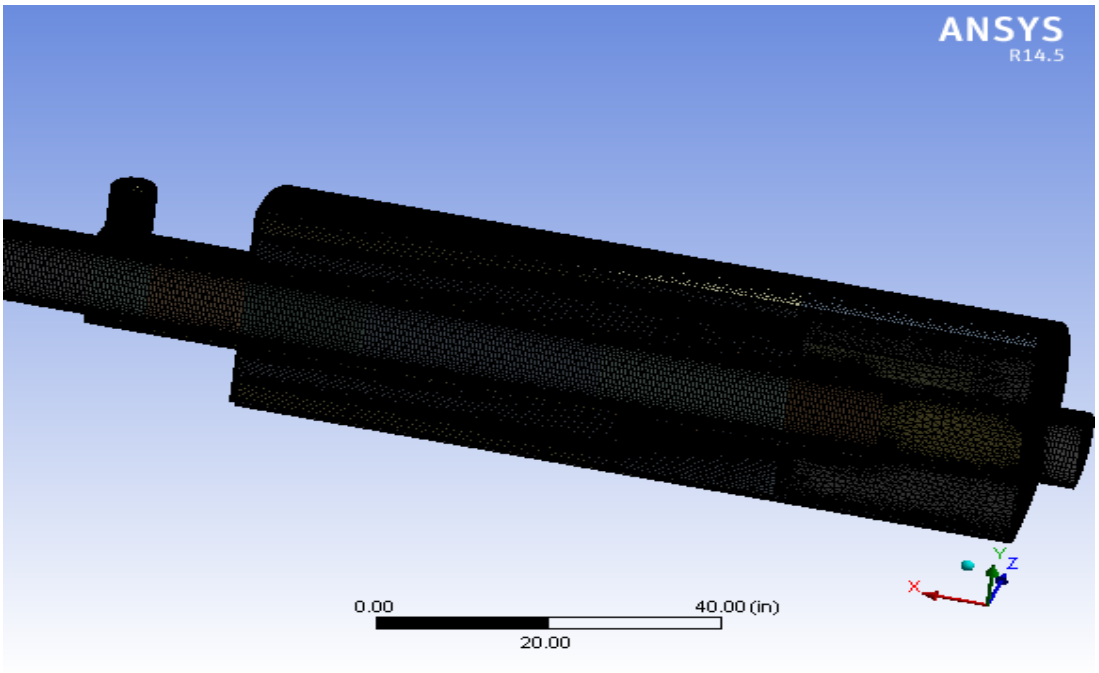

Figure 6-2. Mesh of the Initial Design Requirements.

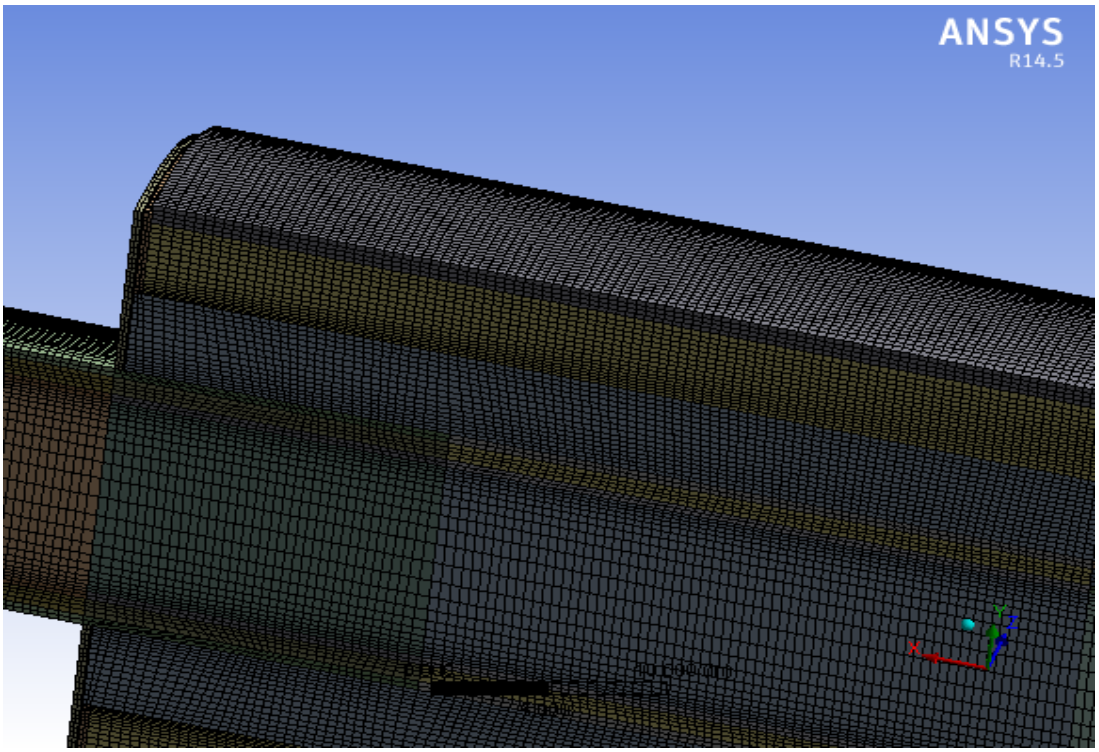

Figure 6-3. Close up View of Meshed Geometry.

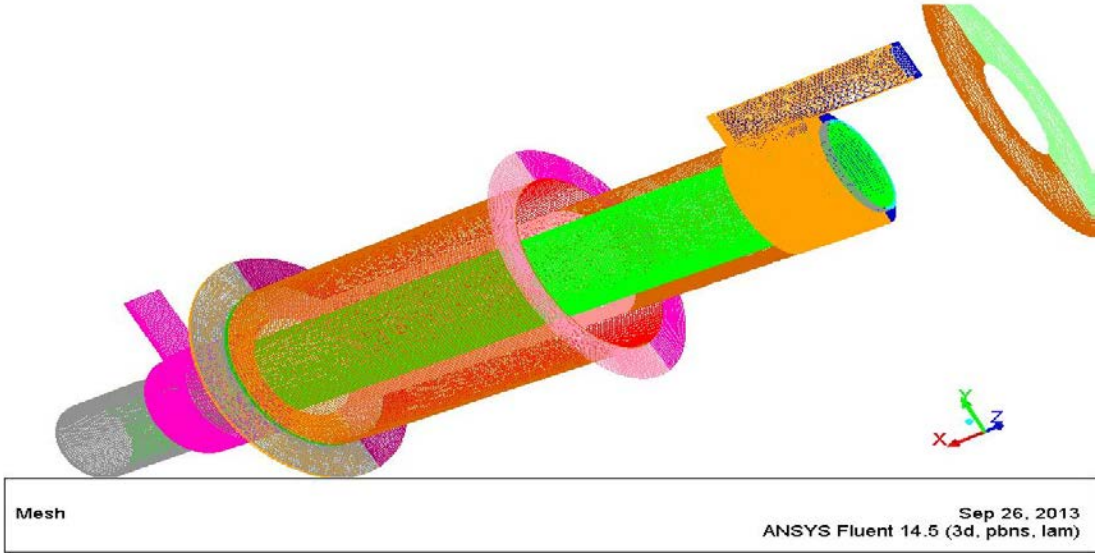

Figure 6-4. Meshed Geometry of Other Design Requirements, 360 Degrees.

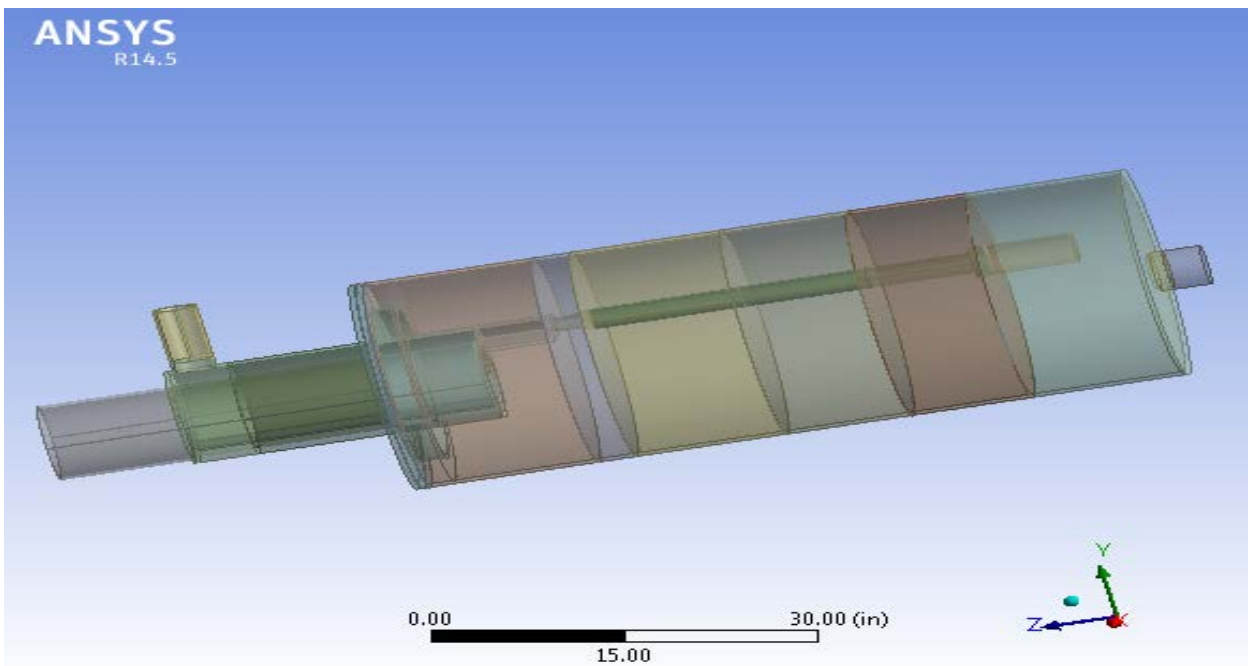

Figure 6-5. Geometry of the Last Design Requirements.

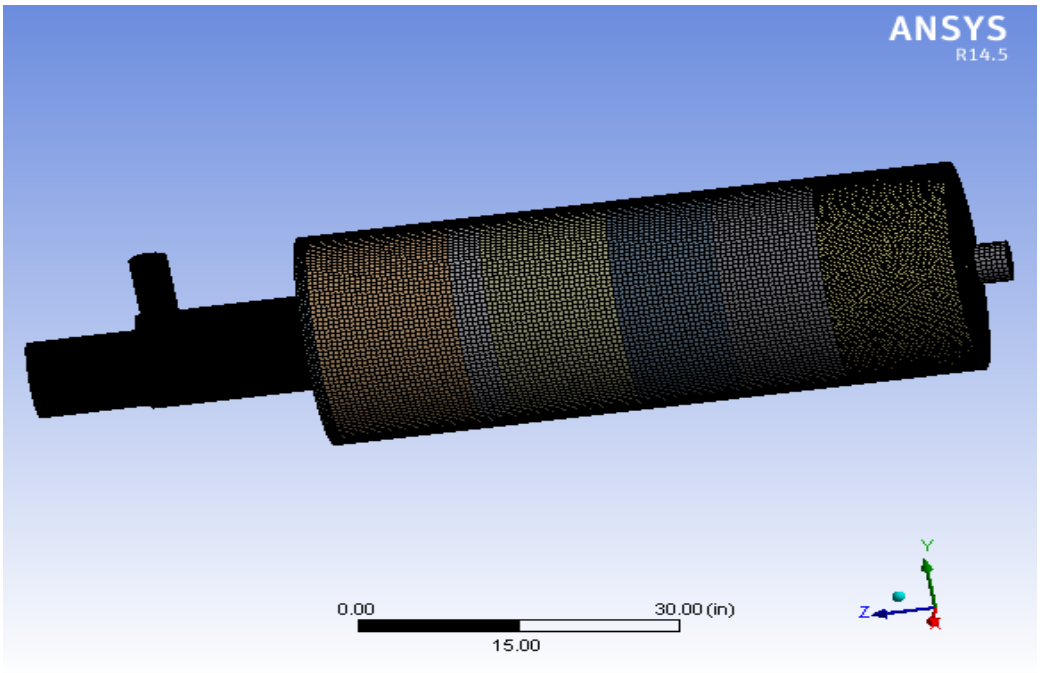

Figure 6-6. Mesh of the Last Design Requirements.

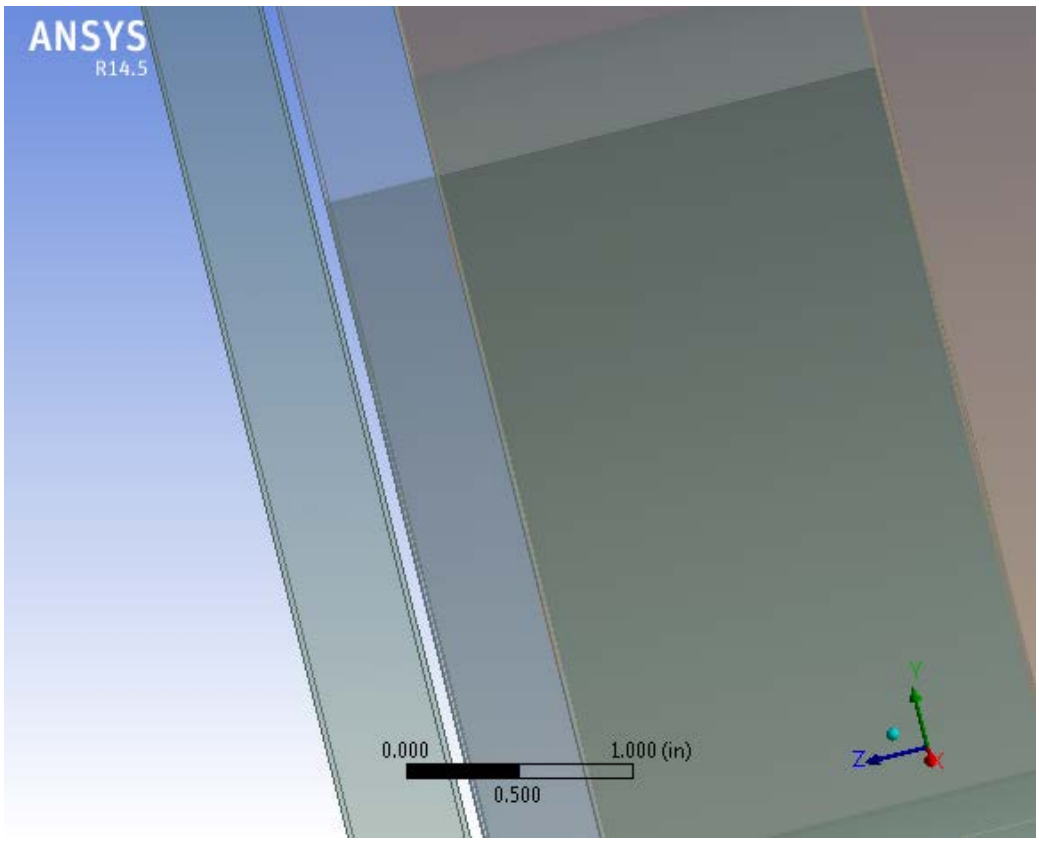

Figure 6-7. Air Entrance Gap between Rotating and Nonrotating Plate.

6.3 Geometric and CFD Modeling

Fluid dynamic modeling of the Reaction Chamber was initiated in FY13 to provide additional insight into the operating characteristics of the Rotary Kiln Gasifier under development at SUNY Cobleskill. CFD modeling of the primary reaction chamber initially used the ANSYS FLUENT software available at Picatinny Arsenal. A parallel effort using the Star-CCM+ software available at Benét Labs was initiated later in the year to take advantage of their computational resources. ANSYS FLUENT and Star-CCM+ are both well respected commercial software packages. Consistent geometric and thermochemical models were supplied to both CFD codes.

Modeling activity at Benét Labs focused on three areas:

- ProE solid model descriptions of the reaction chamber and the exhaust manifold surrounding it
- CFD analysis of exhaust manifold thermal performance
- CFD analysis of reaction chamber performance.

Solid models generated at Benét Labs were transmitted to Picatinny Arsenal staff for use in their FLUENT model preparations. The following sections describe results from each of these areas.

6.3.1 Geometric Model Development

The ProE solid modeling effort provided a convenient means to track test hardware evolution and to provide hardware geometry to the CFD software. Test hardware development followed a largely empirical path, which resulted in the testing of several hardware configurations during the current fiscal year. All configurations were similar in concept, but very different in detail. Concept similarities included the following:

- A central stationary piping system for waste supply and syngas extraction
- A rotating reactor drum assembly surrounding the piping assembly and containing the waste material undergoing chemical reaction
- A gap interface between the rotating drum and the stationary piping assembly to supply combustion air to the char bed at the lower end of the reactor chamber and between the rotor and the stator
- A stationary exhaust shroud channeling diesel exhaust gas over the outer surface of the reactor and supplying heat to the interior of the reactor.

Figure 6-8 shows these representative Reaction Chamber components and regions. Figures 6-9 – **6-12** show the four principal configurations tested during FY13.

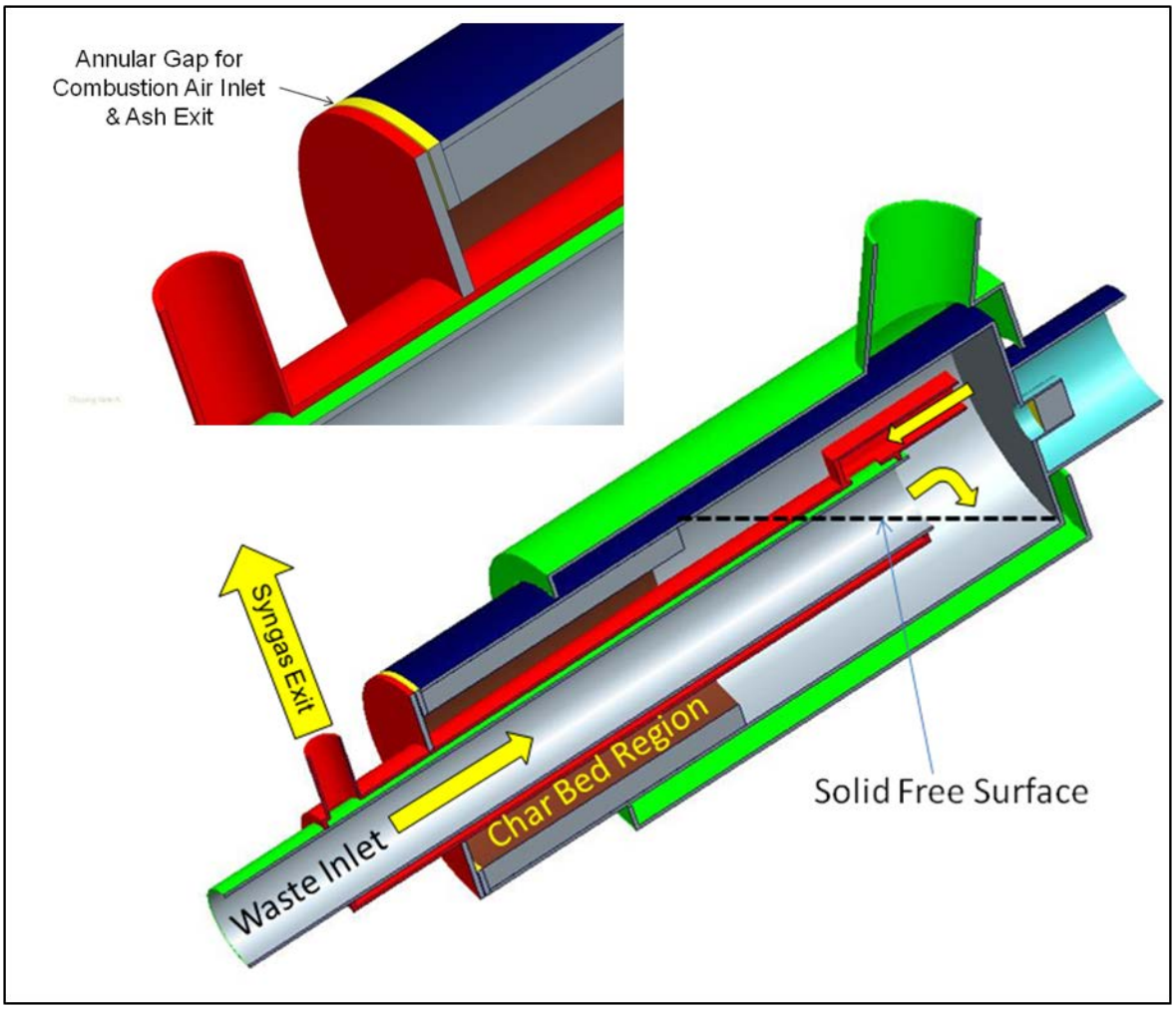

Figure 6-8. Representative Reaction Chamber Regions.

The May 2013 configuration (Figure 6-9) was operated with the reactor axis at an inclination angle of 22 degrees and the reactor drum rotating at various angular velocities. Several problems were encountered in this configuration. The long waste stream feed pipe often became impacted with compressed waste, which required system shutdown. Waste material in the reaction chamber developed a free surface that sometimes partially covered and plugged the syngas extraction pipe inlet leading to system shutdown. Increased drum angular velocity altered the free surface location to alleviate covering of the syngas pipe entrance, but also increased the potential for combustion air to burn through the char bed adjacent to the stationary piping, and provide a direct path for combustion air to reach and prematurely oxidize the syngas.

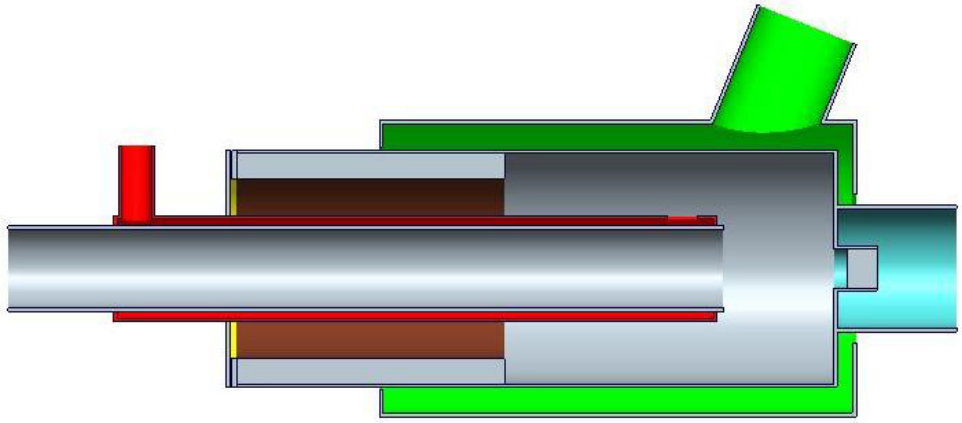

Figure 6-9. May 2013 Configuration.

The July 2013 configuration (Figure 6-10) added an extension to the syngas pipe entrance to move the syngas pipe was well above the expected waste material free surface. Testing quickly showed this modification did not provide successful operation, because the highly compacted material in the feed pipe filled and plugged the entire upper end of the reactor chamber, and did not distribute well onto the waste material free surface. Combustion air was still able to burn through the char bed adjacent to the stationary piping, and to generate a direct path for combustion air to reach and prematurely oxidize the syngas. Inadequate sealing in the lower end of the reaction chamber was also observed, which also permitted combustion air to flow through and around the porous fire brick adjacent to the outer edge of the char bed, and contribute to premature combustion of the syngas in the upper end of the reaction chamber. The additional testing associated with this configuration confirmed previously identified problems were not resolved, and led to isolation of problems associated with leakage around the fire brick insulation. Clearly additional changes were needed before successful reactor operation would become a reality.

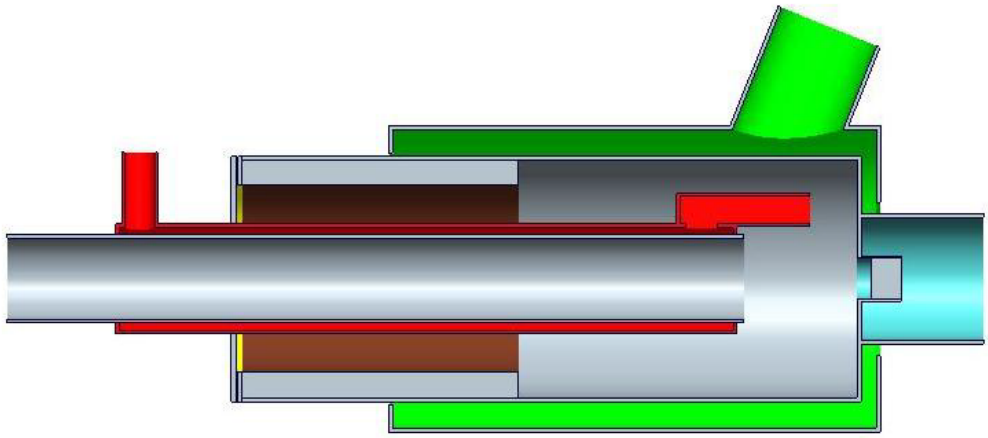

Figure 6-10. July 2013 Configuration.

The September 2013 configuration (Figure 6-11) included changes that alleviated many of the problems identified in the previous configuration. The reduced length of the waste stream feed pipe resulted in less compaction of the waste material in the feed pipe, a lower free surface level in the chamber, and improved delivery of the waste material to the top of the char bed. The syngas extraction pipe was also revised to locate it close to the top of the reaction chamber. Both of these changes virtually eliminated the potential for waste material to plug the upper end of the reaction chamber and directly enter the syngas extraction piping. The fire brick adjacent to the char bed were replaced by a steel wall assembly filled with Fiberfrax ceramic fiber and welded to the reaction chamber outer wall, which eliminated the potential combustion air leakage. To maintain the integrity of the char bed and reduce the potential for premature combustion of the syngas, the chamber inclination was increased to 40 degrees, and the rotation rate was limited to 0.5 rpm. Reactor performance was much improved, but still not acceptable.

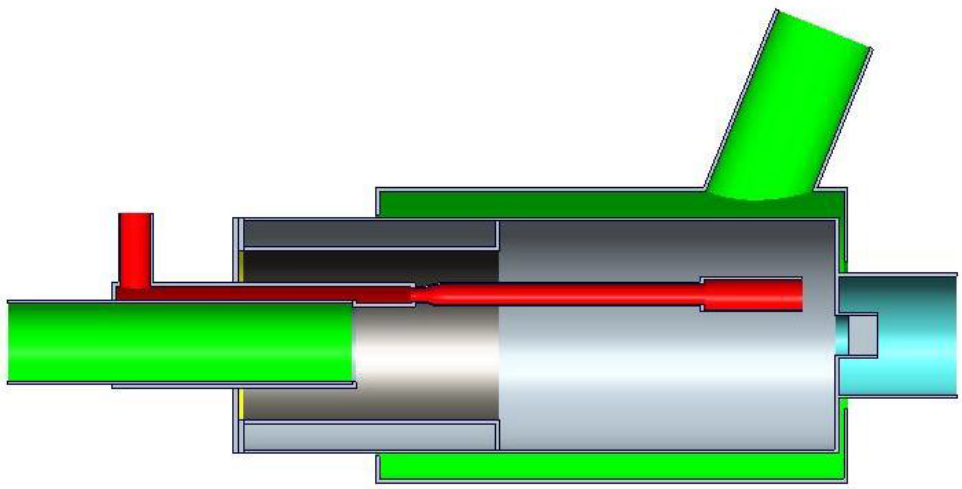

Figure 6-11. September 2013 Configuration.

The October configuration (**Figure 6-12**) eliminated the Fiberfrax insulation and most of the steel assembly containing it, which increased waste / char bed volume and allowed reaction chamber performance to approach system goals. The shortened feed pipe and increased bed axial cross-section appears to allow the feed stream to directly enter and replenish the char bed and to nearly the eliminate premature combustion of the syngas. Planned CFD analysis was expected to yield further insight into mechanisms controlling system performance. Because chamber internal temperature measurements were lower than expected, CFD based heat exchanger analysis of the exhaust heating configuration was initiated in parallel with CFD modeling of the primary reaction chamber.

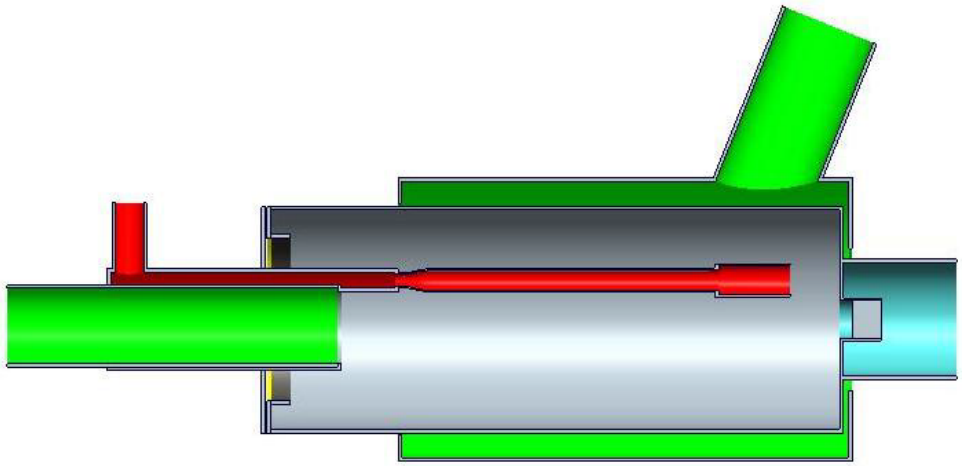

Figure 6-12. October 2013 Configuration.

Because of the several configuration changes, initial CFD analysis was limited to evaluating the performance of the exhaust gas heat exchanger associated with the September and October 2013 configurations (**Figure 6-13**). CFD modeling of the primary reaction chamber for the October 2013 configuration is currently underway in both FLUENT and Star-CCM+.

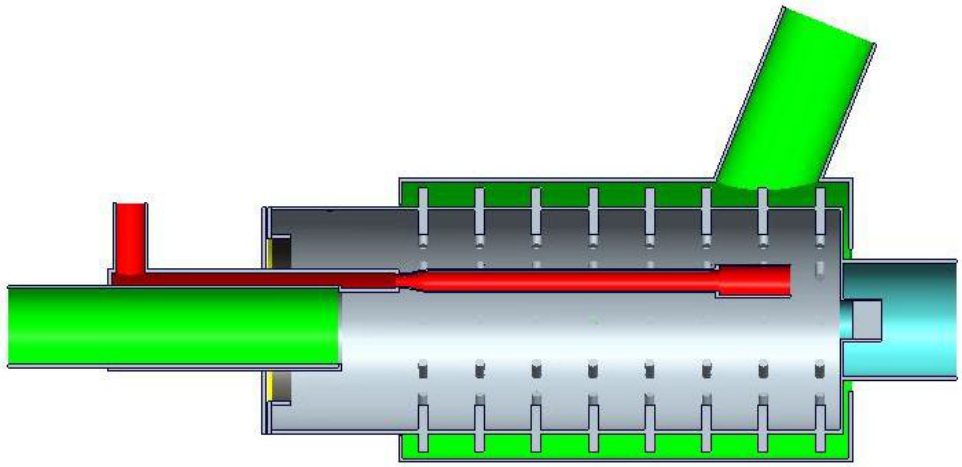

Figure 6-13. October 2013 Configuration with "Pin-Fin" Heat Transfer Surface Extensions.

The lower than expected chamber temperatures measured during testing of the October configuration prompted evaluation of a "Pin-Fin" enhanced chamber wall configuration. Measured exhaust inlet and exit temperatures suggested the thermal efficiency of the current heat exchanger geometry could be significantly improved. The October configuration was analytically modified to include the "Pin-Fin" surface extensions shown in **Figure 6-13**. "Pin-Fins" could be readily applied to the current system with either an "external" or "through" pin configuration. Exhaust manifold thermal performance results for the "external" version are presented in the next section.

6.3.2 Exhaust Manifold CFD Analysis

Two exhaust manifold models were completed to evaluate the thermal performance of the current configuration and a practical "Pin-Fin" configuration. From the outside, both models appeared as shown in **Figure 6-14**, and considered heat transfer in both the fluid and the exhaust shell. The reference model assumed the outer surface of the rotor adjacent to the exhaust gas was a uniform 533 K, while the "Pin-Fin" enhanced model assumed the inner reactor wall was a uniform 500 K and considered heat transfer in both the reactor wall and the exhaust shell. Both models were supplied with 922K air entering a tangential inlet port at 0.09 kg/s and exiting a "nominally" vertical exhaust pipe at the upper end of the reactor, and neither model considered radiations effects.

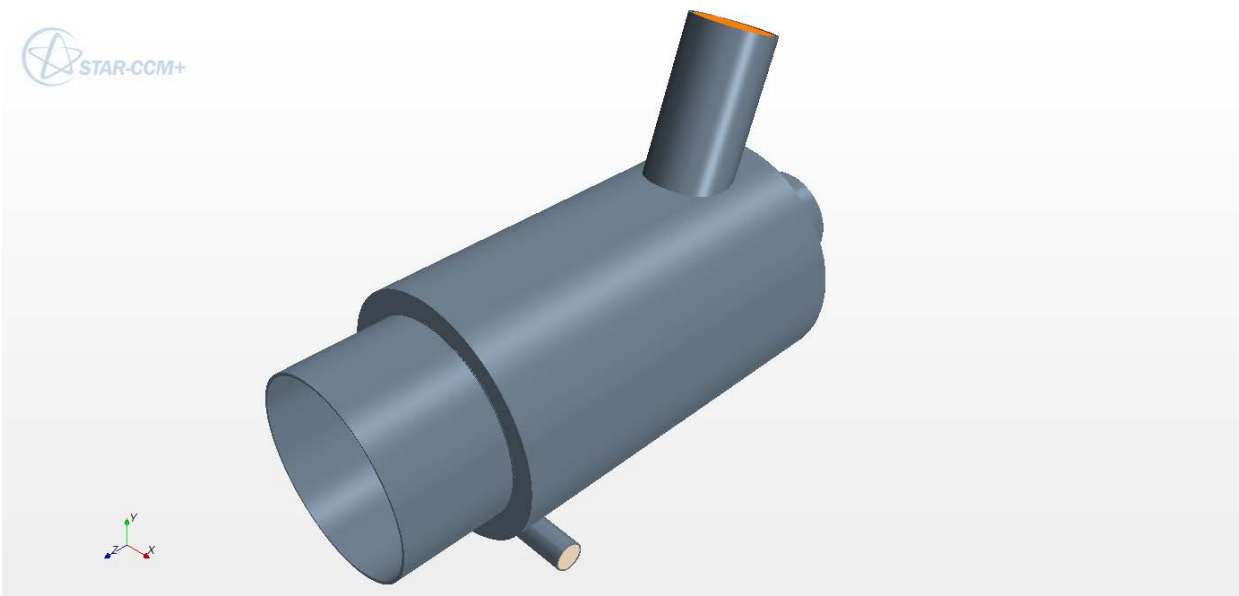

Figure 6-14. Nominal Exhaust Manifold Geometry.

6.3.2.1 Current Reactor Geometry

In the reference model, the steady RANS conservation equations were solved in a coupled-implicit manner on 375K cell mesh. The solution included the effects of flow turbulence, reactor wall rotation, and buoyancy. **Figure 6-15** shows the resulting Rotor Heat Flux distribution, which was fairly uniform except in the vicinity of the tangential exhaust gas inlet. For the assumed 533K rotor surface temperature, heat entered the rotor at the rate of 11.0 kW. The average heat transfer coefficient (H) was 18.9 W/m2/K, the corresponding surface area (S) was 2.5 m^2, and the H*S product was 47.3 W/K.

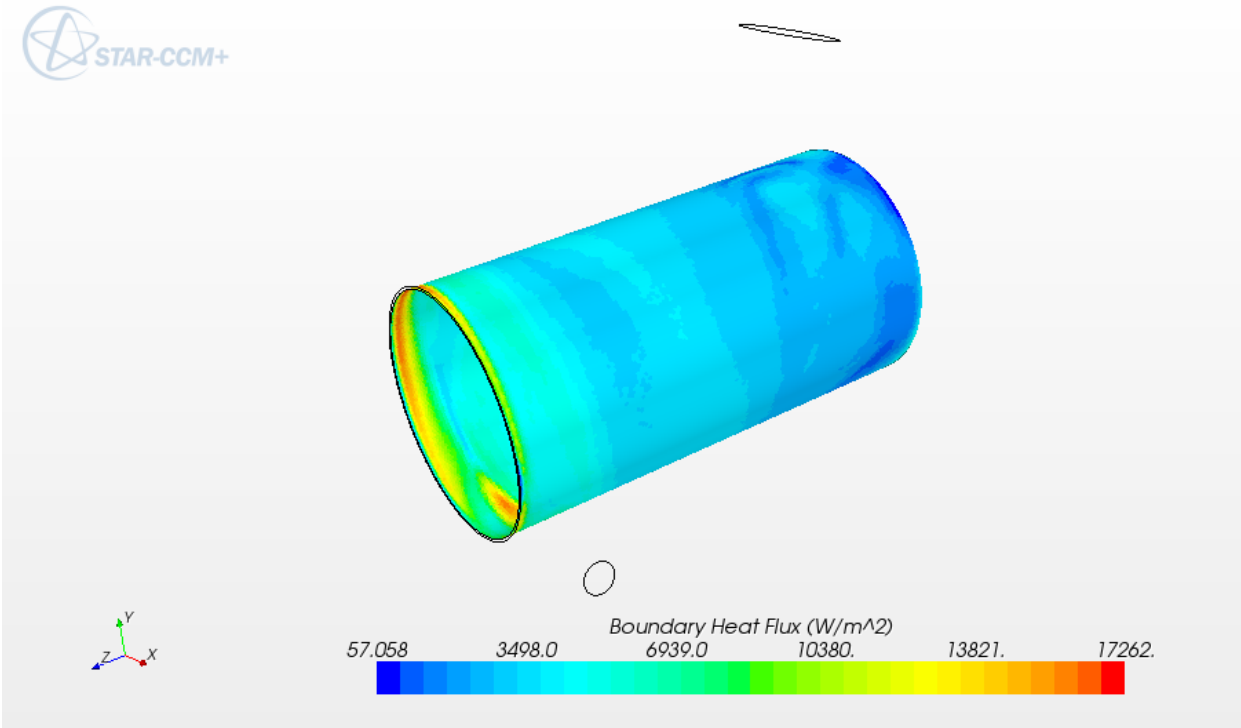

Figure 6-15. Rotor Surface Heat Flux Distribution.

6.3.2.2 Pin-Fin Enhanced Reactor Geometry

The "Pin-Fin" configuration model was solved in an equivalent manner on a much larger 2.285 million cell mesh. The larger grid size was required to "nominally" resolve flow characteristics around the pin-fins. Figure 6-16 shows the resulting Rotor Heat Flux distribution, which was fairly uniform except in the vicinity of the tangential exhaust gas inlet. For the assumed 500K internal rotor surface temperature, heat entered the rotor at the rate of 12.8 kW. The average heat transfer coefficient (H) was 16.0 W/m^2/K, the corresponding surface area (S) was 2.9 m^2, and the H*S product was 46.5 W/K. The thermal performance of this configuration was slightly less than the reference configuration, and would not be considered a beneficial addition to the system. Alternate surface enhancements may yield significantly improved performance without incurring excessive exhaust side pressure drop.

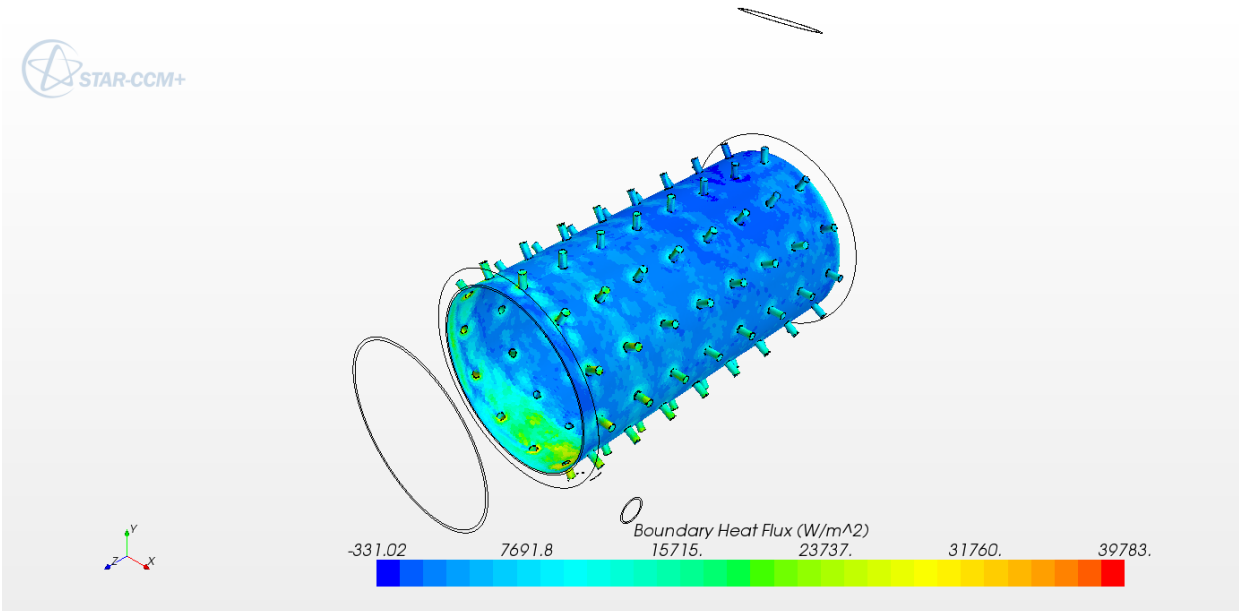

Figure 6-16. Rotor Surface Heat Flux Distribution with "Pin-Fins."

6.3.3 Reactor CFD Analysis

CFD analysis of the reactor chamber started with a fluid-thermal analysis of the reaction chamber without the effects of chemistry and discrete particles. This permitted selection and evaluation of a candidate mesh without the complexity of the chemical and particle dynamics. The initial fluid-thermal analysis solved the steady RANS conservation equations on a 1.03 million cell grid. The subsequent full model is expected to use the same grid, and include chemical and particle dynamics representative of the full system. Both steady and transient solutions are under consideration. The chemical and particle dynamics available in Star-CCM+ are similar to those available in ANSYS FLUENT, and will be selected for consistency between the two software packages. A brief discussion of relevant literature, chemical modeling, and particle dynamics has been provided in the section covering the Methodology and Model Setup of the ANSYS FLUENT model, and will not be repeated here.

6.3.3.1 Initial Fluid-Thermal Analysis

The initial model considered the fluid dynamics of chamber "air" coupled to the energy flows in the rotor and stator walls under boundary conditions representative of actual chamber operation. The inlet flow was set at 0.019 kg/s, the exit of the syngas extraction pipe was fixed to a static pressure of -1990 Pa relative to ambient, and the outer edge of the rotor-stator gap at the base of the reaction chamber was fixed to ambient conditions of 101325 Pa and 300K. A uniform convective boundary condition with a heat transfer coefficient of 300 W/m2/K and an exhaust temperature of 700 K was applied to the rotor surface in contact with the exhaust flowing through the exhaust shroud. Rotor and stator wall properties will be updated from Aluminum to Carbon Steel, and rotor convective boundary condition will be consistent with the above exhaust manifold analyses before execution of the full model.

Figures **6-17** to **6-20** show representative flow, pressure, and temperature distributions from this initial solution. The grid and solution parameter adjustments required to obtain this initial solution will be carried over to the full chamber solution.

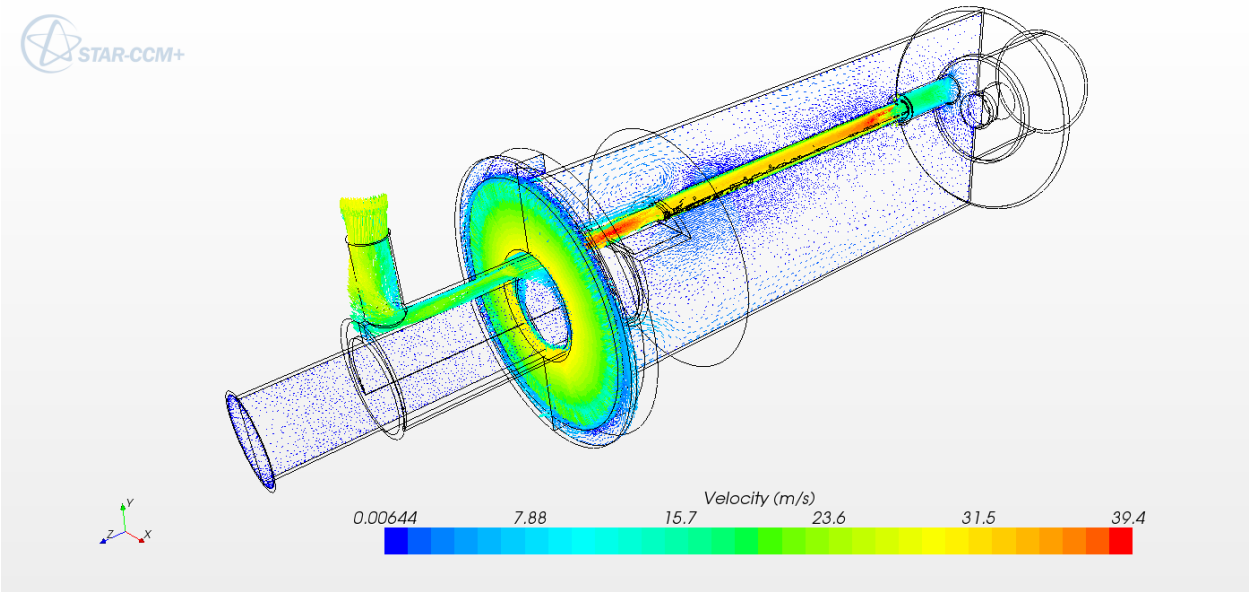

Figure 6-17. Representative Flow Patterns – Vertical Cross-Section.

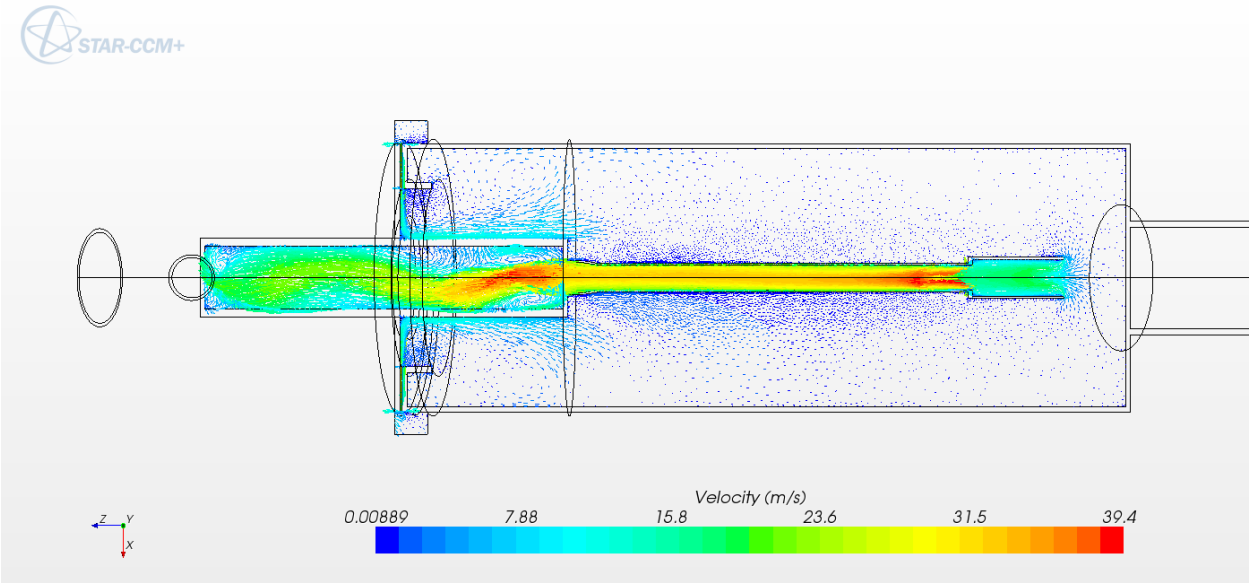

Figure 6-18. Representative Flow Patterns – Plan View.

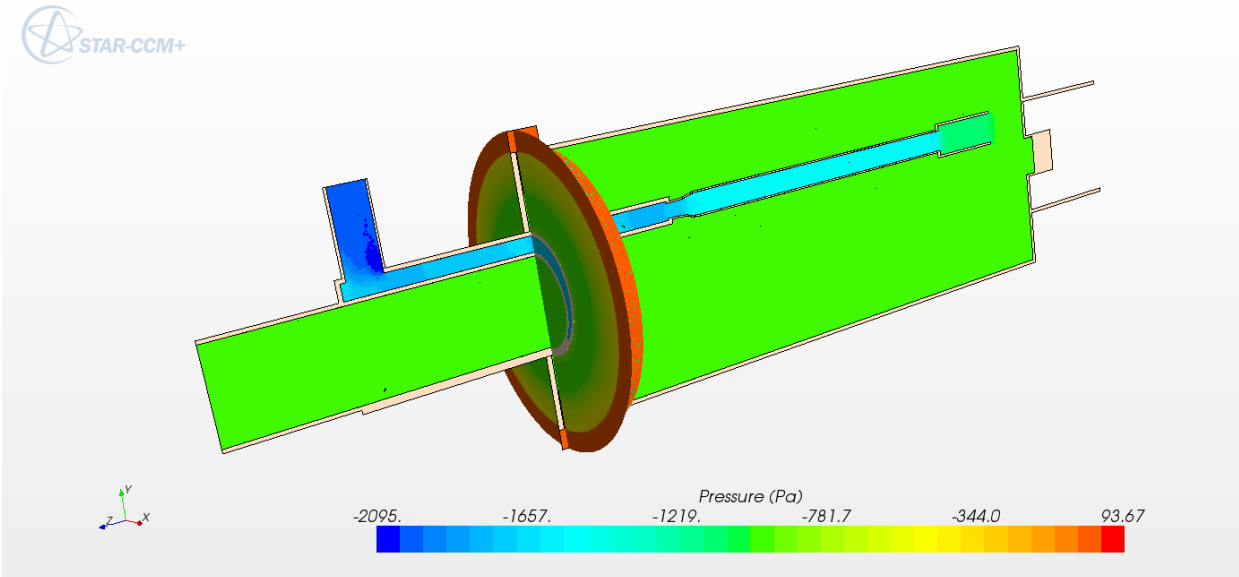

Figure 6-19. Representative Pressure Distributions without Chemical and Particle Dynamics.

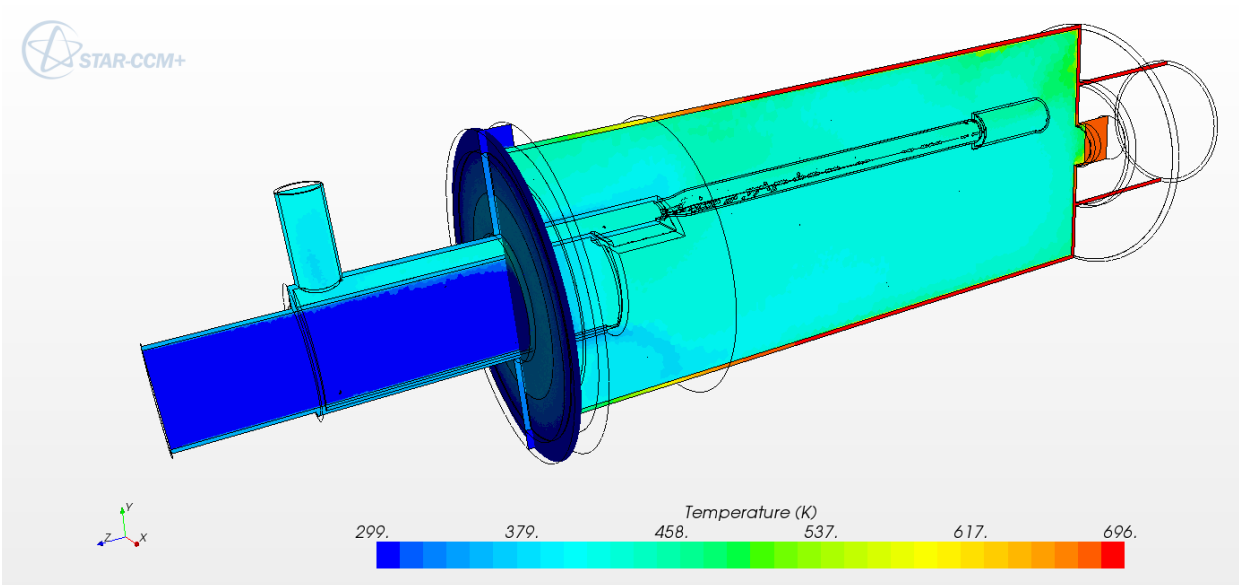

Figure 6-20. Representative Temperature Distributions without Chemical and Particle Dynamics.

6.3.3.2 Fluid-Thermal Analysis with Lagrangian Feed and Chemistry

Model preparation for a more complete solution of the Gasifier Reaction Chamber dynamics included selected review of relevant literature, and exploration of the Star-CCM+ modeling capabilities to confirm suitability for the current problem. The required chemical and particle dynamics will be added to the initial fluid dynamic model from Section 3.1 to form the basis for comparison to test data and evaluation of alternate chamber configurations.

6.3.4 Conclusions

Completed work has tracked evolution of the test hardware at SUNY Cobleskill, provided solid models for CFD activities at both Benét Labs and Picatinny Arsenal, has helped quantify thermal boundary conditions for the reaction chamber, and provided a basis for CFD evaluation of reaction chamber performance.

6.4 Equipment Arrangement

In addition to the thermodynamic modeling, staff at Benét Labs created detailed 3-D models of all parts of the gasifier system. The goal was to show that all the equipment could fit into standard shipping containers. TRICONs were selected because it is more likely that smaller camps would have the capability to move these, rather than an entire 20-ft container.

Figure 6-21 and Figure 6-22 show the results of this effort. All of the gasifier system, including generator fits into three TRICONs, which can be hauled on the back of a HEMTT. The TRICONs can be mounted in a standard steel rack, that can be mechanically dismounted (rolled-off the back) from the HEMTT.

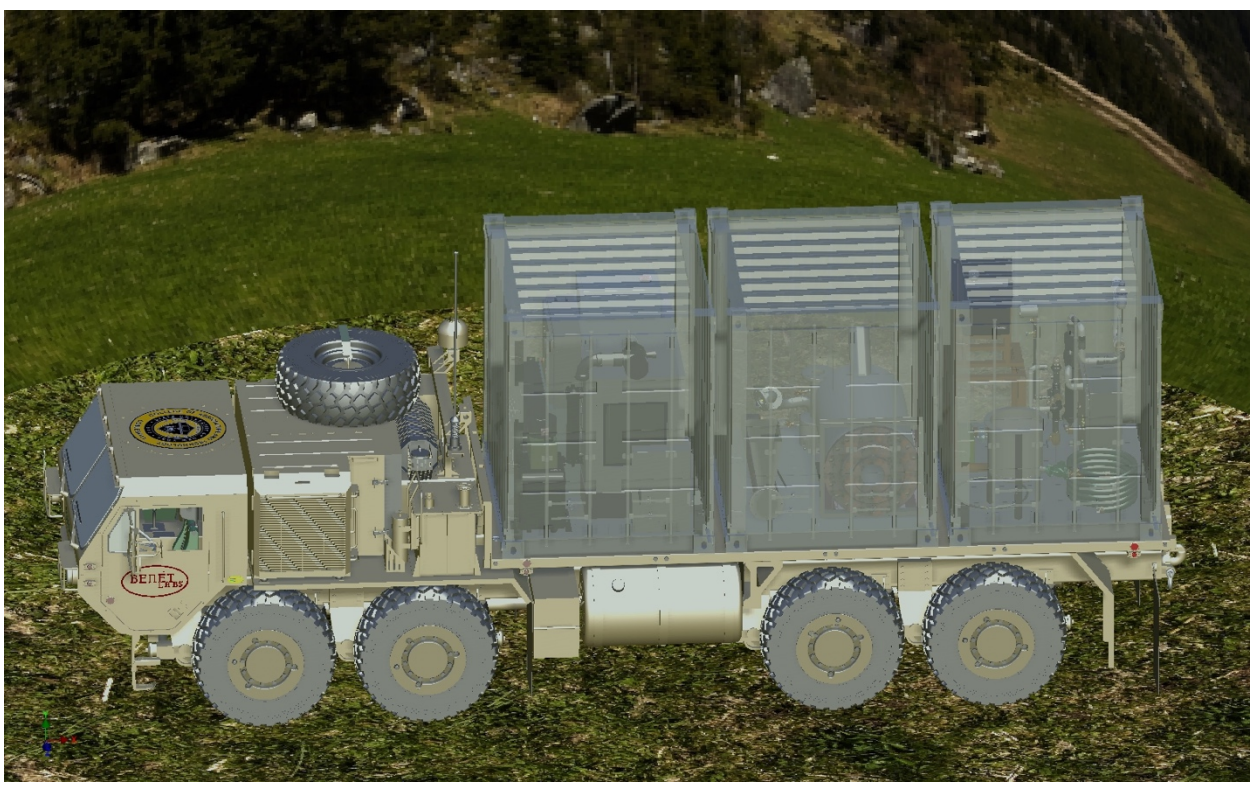

Figure 6-21. Side view of gasifier equipment in TRICONs.

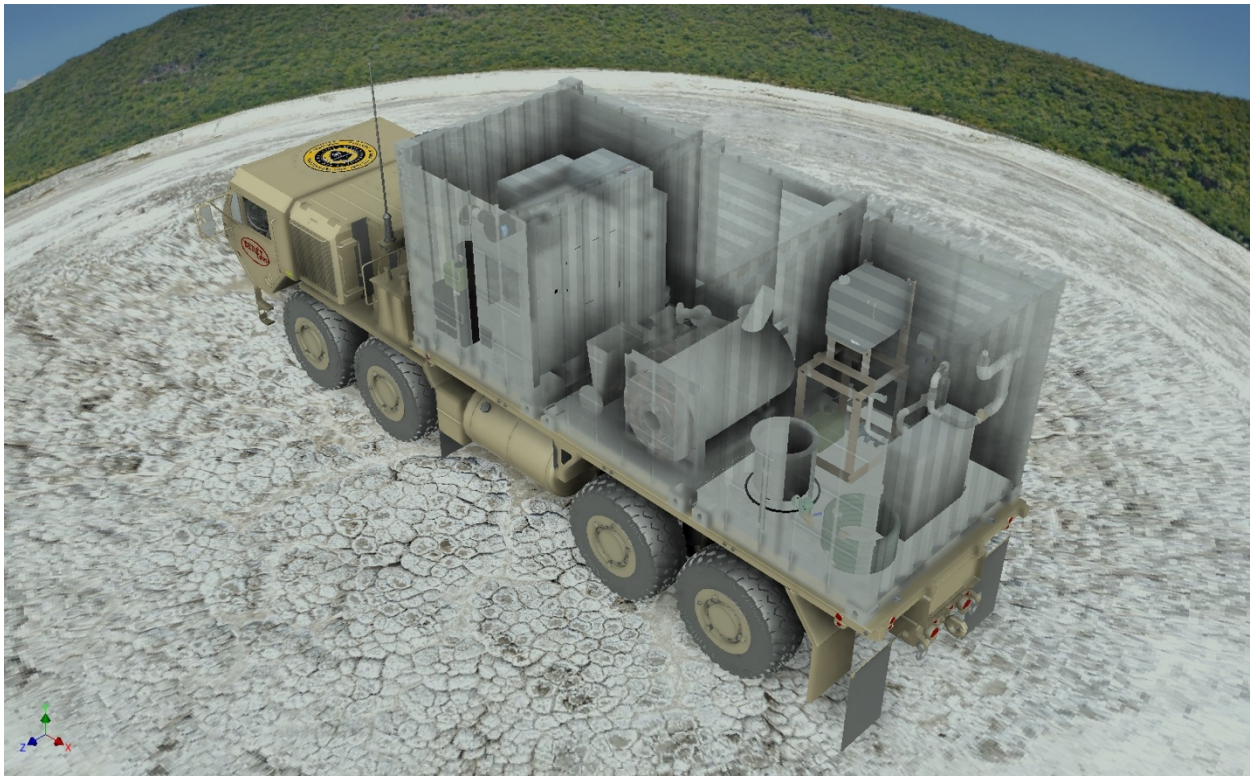

Figure 6-22. Top View of Gasifier System in TRICONs.

7. Diesel Engine Efficiency Studies

This chapter presents syngas efficiency testing on using commercial diesel engines with 60 kW generators, the common size for contingency power applications

7.1 EPA Tier 2 and Tier 3 Engines

Modern diesel engines replace mechanical governors with electronic fuel injection and electronic ECMs. Electronic governor controls maintain the engine speed at the exact synchronous speed to maintain 60 Hz electrical frequency. Electronic governors maintain precision frequency response over the entire operating range for electrical load.

Zero percent electronic governor "droop" is not a desired feature when dual fueling. Mechanical governors operate at a 4% governor droop (1860 rpm no load and 1780 rpm full load) for generator drives. Observations indicate a loss in fuel savings due to the fact that the electronic controls over-inject liquid fuel, which force the engine to operate more like a diesel cycle than as a combination "Diesel-Otto." The main observations are additional liquid fuel usage and heavy PM in the exhaust stream.

Tier 2 and Tier 3 engines were tested as follows:

1. Sixty-kW Generator with EPA Tier 2 John Deere 5030HF270 with electronic controlled fuel injection and Woodward electronic governor.
   a. No abnormal PM.
   b. Maximum liquid fuel savings measured was 65% on IIFPRG syngas.
   c. All tests conducted at >90% load. No noticeable loss in engine power when dual fueling.
2. Sixty-five-kW Generator with EPA Tier 3 John Deere 4045TF285 with electronic controlled fuel injection and John Deere electronic ECM.
   a. Heavy PM observed at the slightest amount of dual fueling.
   b. Maximum liquid fuel savings measured was 37% on IIFPRG syngas.
   c. All tests were conducted at > 90% load. There was no noticeable loss in engine power when dual fueling.

7.2 Feedstocks for EPA Tier 2 Engines Testing

Researchers decided to stop testing the EPA Tier 3 engine due to excessive black smoke emissions. The EPA Tier 2 engine was tested for 60-second fuel usage "clip tests" using syngas created from the IIFPRG. Table 7-1 lists the feedstocks tested.

Table 7-1. Clip Test Feedstocks.

Diesel Clip Tests			
Test	Date	Time	Feedstock
Test 1	11/19/2013	13:49	Cooksburg Wood Chips
Test 2	11/19/2013	14:17	50% Cooksburg Chips / 50% Prentice Hall Cafeteria Waste
Test 3	11/20/2013	12:52	Cooksburg Wood Chips
Test 4	11/20/2013	13:52	70% Cooksburg Wood Chips, 30% HDPE by weight
Test 5	11/20/2013	13:54	70% Cooksburg Wood Chips, 30% HDPE by weight
Test 6	11/20/2013	15:15	50% Cooksburg Wood Chips, 50% Horse Manure by weight
Test 7	11/20/2013	15:34	50% Cooksburg Wood Chips, 50% Horse Manure by weight
Test 8	11/21/2013	12:10	50% Cooksburg Wood Chips, 50% Cafeteria Waste by weight
Test 9	11/21/2013	12:12	50% Cooksburg Wood Chips, 50% Cafeteria Waste by weight
Test 10	11/21/2013	14:45	50% Cooksburg Wood Chips, 50% Cafeteria Waste by weight

7.3 Test Configuration

Figure 7-1 shows the equipment used to measure liquid fuel usage. Fuel consumption is determined using the change in fuel level in a clear sight glass over a 60-second test period. The density used for liquid diesel fuel is 7.1 pounds per US gallon.

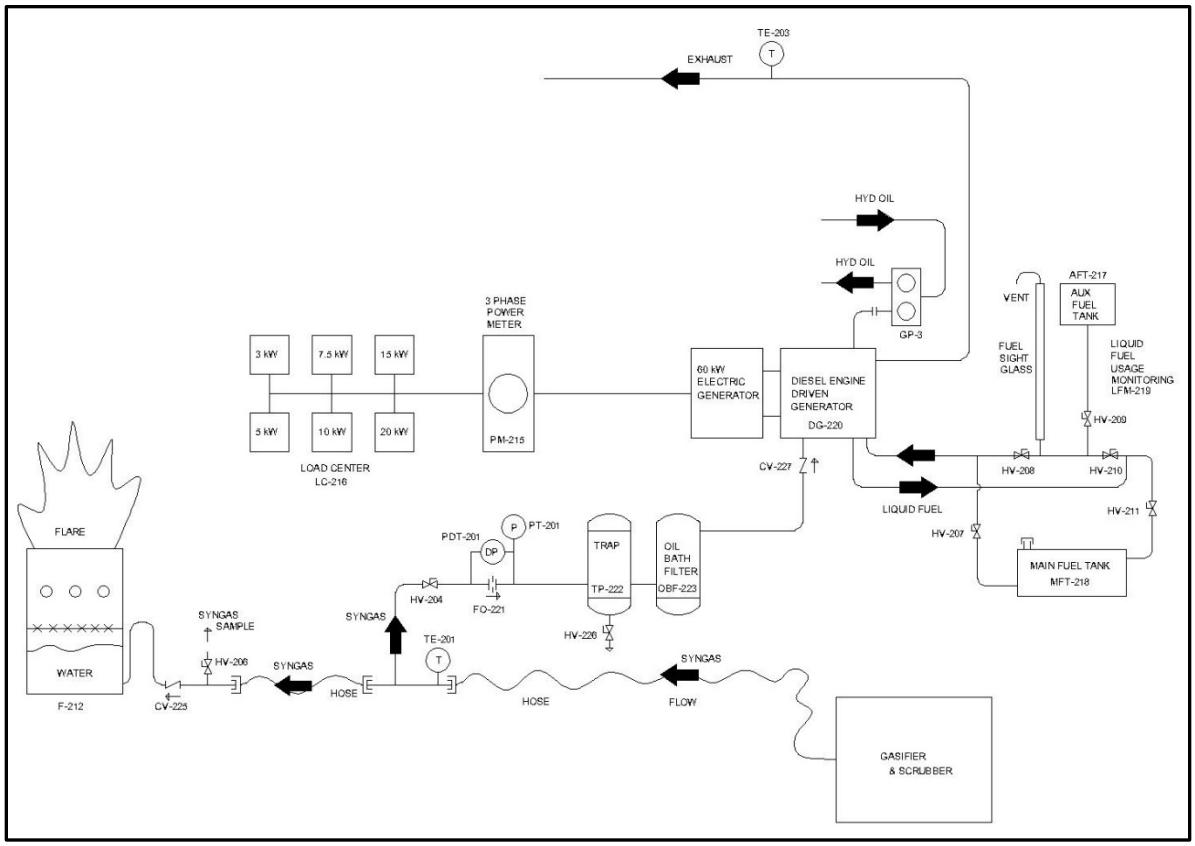

Figure 7-1. Equipment Configuration for Clip Tests.

7.4 Baseline Factory Ratings

Figure 7-2 shows the fuel consumption for the EPA Tier 2 John Deere 5030HF270 engine as shown on the engine manufacturer's data sheet. Figure 7-3 shows the brake specific fuel consumption and Figure 7-4 shows the thermodynamic efficiency as calculated from the engine data sheet.

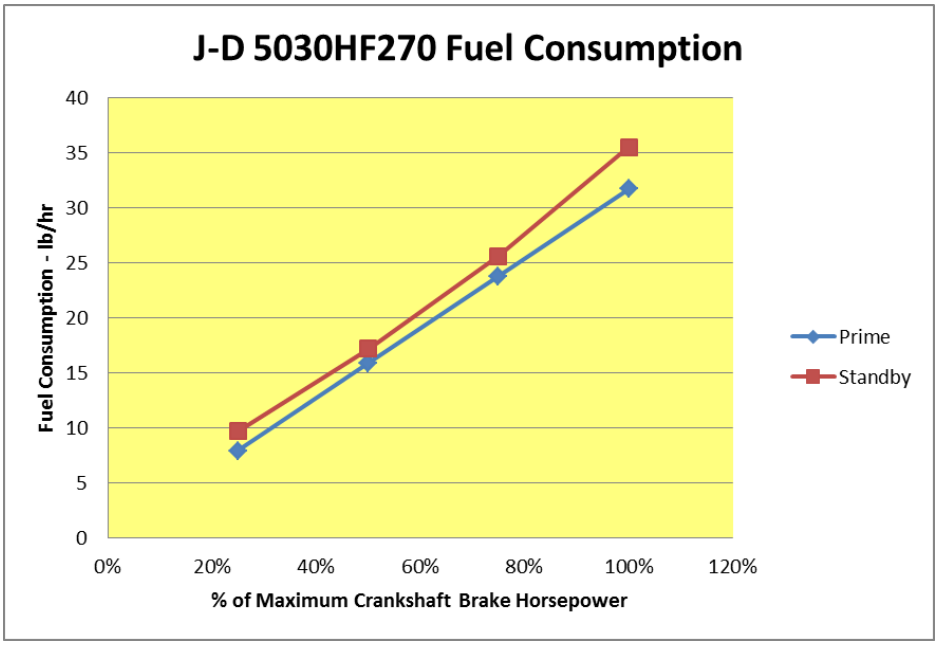

Figure 7-2. Fuel Consumption.

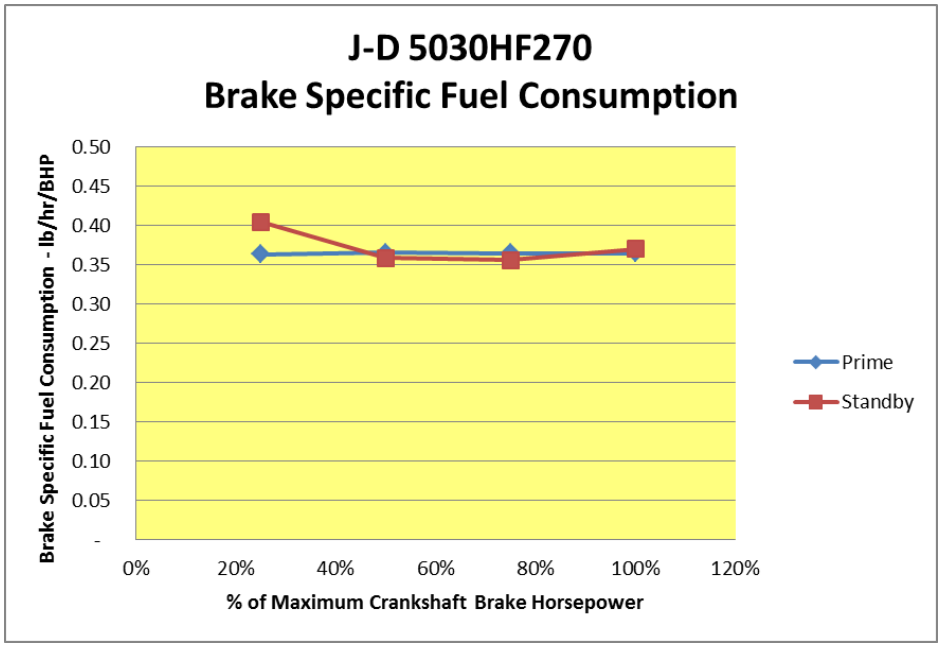

Figure 7-3. Brake Fuel Consumption.

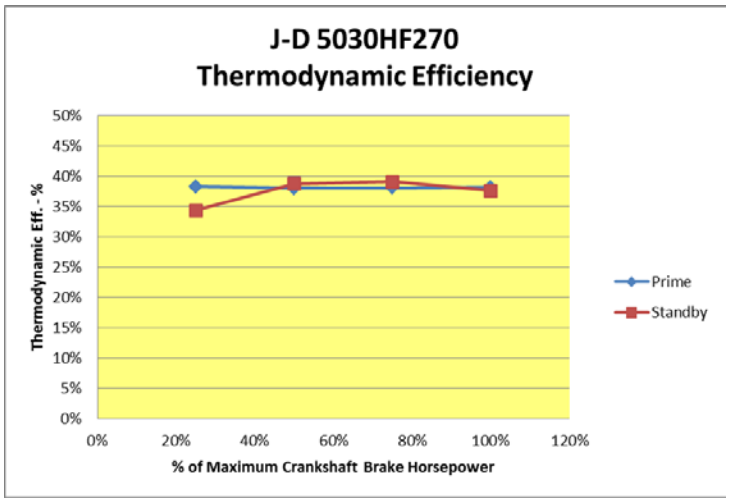

Figure 7-4. Thermodynamic Efficiency.

7.5 Clip Test Procedure

Clip tests are conducted as follows:

1. Hand valves HV-207 and HV-211 are open. HV-208 and HV-210 are closed. The engine operates normally using fuel from main fuel tank MFT-218.
2. Open HV-209. Fuel flows from aux. fuel tank AFT-217 and fills the sight glass.
3. Close HV-209 when the sight glass is full.
4. Open HV-208 and HV-210. Close HV-207 and HV-211. Fuel to run the engine flows from the fuel sight glass.
5. Open HV-204 to allow syngas to flow into the engine.
6. Mark the fuel level on the sight glass with a dry erase marker and start the 60-second timer.
7. Mark the fuel level on the sight glass with a dry erase marker when the 60-second timer expires.
8. Obtain exhaust emissions.
9. Open HV-207 and HV-211 to allow diesel fuel to flow from main fuel tank MFT-218.

7.6 Clip Test Results

The data in Table 7-2 summarize the results from this set of tests. This shows that 60% reductions in liquid fuel usage (for a constant electric load) are achievable on IIFPRG syngas, in diesel engines similar to those in common tactical generator sets. While CO exhaust emissions increase slightly, NO_X emissions are reduced by roughly 50%. The afterburner system should combust almost all CO from the exhaust.

Figure 7-5 shows no loss in thermodynamic efficiency when dual fueling with an electronic governor, which is contrary to the mechanical governor findings. The data indicates the electronic governor may be injecting more liquid fuel than necessary to maintain precision frequency control. Another possibility is electronic fuel injection atomizes liquid fuel better by pulsing up to 100 times per injection cycle. This may help to compression ignite the gaseous fuel-air mixture more efficiently.

Table 7-2. Clip Test Results.

Test:		Test 1	Test 2	Test 3	Test 4	Test 5	Test 6	Test 7	Test 8	Test 9	Test 10
Test Date:		11/19/2013	11/19/2013	11/20/2013	11/20/2013	11/20/2013	11/20/2013	11/20/2013	11/21/2013	11/21/2013	11/21/2013
Test Time:		13:49	14:17	12:52	13:52	13:54	15:15	15:34	12:10	12:12	14:45
Electrical Load:	kW	50	50	50	50	50	50	50	50	50	50
Power Take Off Load:	BHP	16.5	16.5	16.5	16.5	16.5	16.5	16.5	16.5	16.5	16.5
Syngas Flow to Engine During Test:		100%	100%	100%	100%	100%	100%	100%	100%	100%	100%
Syngas Sample Number:		SB111913-1345	SB111913-1417	SB112013-1245	SB112013-1400	SB112013-1400	SB112013-1515	SB112013-1515	SB112113-1217	SB112113-1217	SB112113-1455
Syngas Low Heating Value	BTU/scf	122	134	135	176	176	145	145	119	119	109
Visual Opacity		No Visible PM	No Visible PM	No Visible PM	No Visible PM	No Visible PM	No Visible PM	No Visible PM	No Visible PM	No Visible PM	No Visible PM
Dual Fuel Test											
Test Start Measurement:	inch	26.75	33.375	40	40.5	27	35.75	37	36.5	30.25	23.625
Test End Measurement:	inch	43.25	42.25	51.25	50.75	34.5	48.5	49.75	50.5	44	35.125
Test Duration:	sec	90	60	60	60	60	60	60	60	60	60
Liquid Fueling Rate	gal/hr	2.56	2.06	2.62	2.38	1.74	2.97	2.97	3.26	3.20	2.67
Liquid Fueling Rate	lb/hr	18.16	14.65	18.58	16.92	12.38	21.05	21.05	23.12	22.70	18.99
Syngas Flow to Engine	SCFM	36.5	36.5	28.9	20.3	27.0	22.0	27.8	26.5	26.9	24.6
Gaseous Fueling Rate	BTU/hr	267505	293817	234441	214550	285013	191723	241563	189092	192325	160884
Liquid Fueling Rate	BTU/hr	332734	268456	340297	310048	226864	385669	385669	423480	415918	347859
Total Gross Fueling Rate	BTU/hr	600240	562273	574738	524598	511877	577392	627233	612573	608243	508743
Crankshaft Load	BHP	88.7	88.7	88.7	88.7	88.7	88.7	88.7	88.7	88.7	88.7
Crankshaft Load	BTU/hr	225654	225654	225654	225654	225654	225654	225654	225654	225654	225654
Liquid Diesel Fuel Savings		47.6%	56.2%	46.4%	51.0%	64.1%	37.0%	37.0%	31.7%	32.9%	43.9%
Dual Fuel Thermodynamic Efficiency		37.6%	40.1%	39.3%	43.0%	44.1%	39.1%	36.0%	36.8%	37.1%	44.4%
Baseline Fuel Consumption											
Test Start Measurement:	inch	12.75	34.5	38.25	26.375	26.375	29.5	29.5	27.5	27.5	27.5
Test End Measurement:	inch	33.75	54.75	59.25	47.275	47.275	49.75	49.75	48	48	48
Test Duration:	sec	60	60	60	60	60	60	60	60	60	60
Liquid Fueling Rate	gal/hr	4.88	4.71	4.88	4.86	4.86	4.71	4.71	4.77	4.77	4.77
Liquid Fueling Rate	lb/hr	34.67	33.44	34.67	34.51	34.51	33.44	33.44	33.85	33.85	33.85
Liquid Fueling Rate	BTU/hr	635220	612534	635220	632195	632195	612534	612534	620096	620096	620096
Total Gross Fueling Rate	BTU/hr	635220	612534	635220	632195	632195	612534	612534	620096	620096	620096
Crankshaft Load	BHP	88.7	88.7	88.7	88.7	88.7	88.7	88.7	88.7	88.7	88.7
Crankshaft Load	BTU/hr	225654	225654	225654	225654	225654	225654	225654	225654	225654	225654
Baseline Thermodynamic Efficiency		35.5%	36.8%	35.5%	35.7%	35.7%	36.8%	36.8%	36.4%	36.4%	36.4%
Dual Fuel Emissions											
CO	% Vol	NA	NA	NA	0.16%	0.16%	0.41%	0.41%	NA	NA	NA
O_2	% Vol	NA	NA	NA	10.83%	10.83%	11.00%	11.00%	NA	NA	NA
CO_2	% Vol	NA	NA	NA	8.70%	8.70%	7.90%	7.90%	NA	NA	NA
NO_x	PPM	NA	NA	NA	300	300	213	213	NA	NA	NA
Baseline Emissions											
CO	% Vol	NA	NA	NA	0.04%	0.04%	0.04%	0.04%	NA	NA	NA
O_2	% Vol	NA	NA	NA	12.90%	12.90%	12.90%	12.90%	NA	NA	NA
CO_2	% Vol	NA	NA	NA	6.30%	6.30%	6.30%	6.30%	NA	NA	NA
NO_x	PPM	NA	NA	NA	493	493	493	493	NA	NA	NA

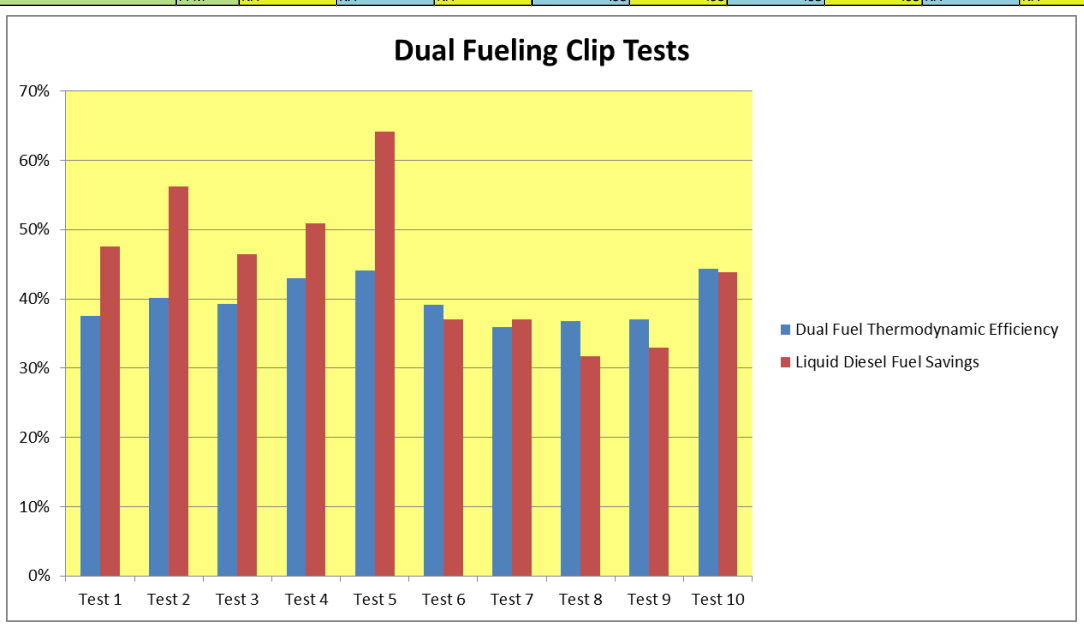

Figure 7-5. Clip Test Efficiency and Fuel Savings.

7.7 Conclusions

The diesel engine performance, when dual fueled on nitrogen diluted methane, is similar to operating on ultra-low energy syngas. Weak gaseous mixtures, that are not flammable in air, still provide liquid fuel savings in a diesel engine.

Diesel engines can operate with little or no power loss, even when dual fueled at high gaseous fueling rates using very weak syngas. Liquid fuel savings of 83% have been measured on 135 BTU/scf LHV syngas with less than 1.5% moisture content. Reducing the dewpoint of weak syngas greatly increases liquid fuel savings by reducing the thermal load (due to moisture) on the engine.

The engine governor automatically adjusts the liquid fuel injection rate to maintain crankshaft speed at the target 60 Hz synchronous speed. The engine automatically increases speed when feeding gaseous fuel. The governor automatically reduces the liquid fuel injection rate to provide a liquid fuel savings. Gaseous fueling can vary at any flow rate, without concern for air to fuel ratio, by mixing the syngas directly with the engine intake airflow.

Over-fueling is observed by engine speed instability. The governor momentarily stops the injection of liquid fuel to reduce engine speed. Compression ignition stops, causing the engine speed to decrease rapidly. The governor senses the loss of engine speed and starts liquid fuel injection again. The engine speed “hunts” until the gaseous fueling rate is reduced.

The optimum fueling point is determined by engine speed at any electrical load. Gaseous fuel is fed into the engine until the crankshaft speed reaches 98% of the no load governor speed. The control of air to fuel ratio is not required. This type of gas metering control will not work on engines with electronic governors using precision frequency regulation.

Gaseous fuel with significant nitrogen content reduces NOx emissions. Ultra-low energy syngas with a LHV between 100 and 160 BTU/scf provides the lowest NOx emissions. Reducing engine load also reduces NOx emissions.

Dual fueling a diesel engine increases carbon monoxide emissions. A significant loss of thermodynamic efficiency was also observed with mechanical governors. Researchers feel this is the result of the diesel thermodynamic cycle transitioning towards an Otto thermodynamic cycle as the gaseous fueling rate increases.

A significant loss of thermodynamic efficiency was not observed on electronically governed engines. These engines did not provide liquid fuel savings comparable to mechanically governed engines. Excessive PM (diesel soot) was observed in EPA Tier 3 engines. These observations indicate the electronic governor control with precision frequency regulation is over-fueling the engine with liquid fuel to maintain the precise synchronous speed. Reprogramming electronic controls to provide a traditional 4% governor droop may correct these problems.

After all of the gasification experiments, the diesel engine used to burn syngas was disassembled and thoroughly inspected. The engine was in very good condition, with small amounts of wear that could be attributed to syngas operation. Appendix D gives details of this inspection.

8. Dewatering Waste via Mechanical Compression

8.1 Mechanical Compression to Reduce Moisture Content

One of the chief challenges of processing unsorted Municipal Solid Waste (MSW) is the inconsistent and often high moisture content. Commercial mass-burn incineration plants rely on homogenization of vast quantities of incoming waste, excess oxygen, and sometimes supplemental fuels to overcome wet wastes. Some small scale gasification systems attempt to dry incoming waste by diverting a portion of produced thermal energy.

The current objective of the testing being done on biomass products is to test several theories and ideas concerning mechanical dewatering and moisture content percentage reduction. The objective is to first complete small scale testing to find out if using just mechanical and hydraulic methods the moisture content percentage on a wet basis scale can be reduced to a moisture percentage level that will allow for those materials to be burned cleanly and efficiently for heat, power and fuel generation and use. After testing has confirmed that the moisture percentage can be reduced by mechanical means alone or other methods must be used in conjunction with mechanical dewatering a prototype machine will be designed and built for use in testing the mechanical dewatering process. During the testing phase the amount of product being compressed and extruded as well as the integrity of the pressed products shape as well as density and moisture content shall all be tested and observed. Modifications will be done during and after testing to fix any problems or malfunctions that are observed during the building and testing phase of the prototype machine.

This report is to examine the results of tests on several biomass materials using a mechanical method to press out water and to reduce the amount of moisture content percentage within the materials themselves. These test results are the preliminary findings from the testing of paper at 80 and 50% moisture and switchgrass tested at 80% moisture content. The test were done to see what the results were after mechanically dewatering the samples and if the percentage of moisture removed from the biomass type being tested was within the allowable moisture percentage range to allow for it to be burned/combusted without the need for adding a drying element to the prototype that will be built in the near future.

8.2 Mechanical Dewatering Tests Procedure

I Determine as-Received Moisture Content of Feedstock Sample

1. Obtain an approximate 5 gallon (clean bucket) sample of as-received wet feedstock.
2. Remove a sample of about 100 grams from the center of the bucket.
3. Record the tare weight of the small foil drying pan.
4. Place the 100g wet sample in the small foil drying pan and spread the sample out evenly.
5. Record the total combined gross weight of the foil drying pan and the 100 gram as-received wet sample.
6. Calculate the net sample weight (subtract the gross weight from the tare weight).
7. Place the foil sample pan in the drying oven at 115 °C (239 °F) for at least 1 hour.
8. Remove the foil sample pan from the oven and measure the total gross weight.

9. Determine the net weight of the dried sample by subtracting the gross weight from the tare weight.
10. Calculate the percentage moisture (wet basis) of the as-received feedstock samples.

I Sample Preparation

1. Remove about 200 grams and place in one or two large foil pans (keep material depth less than 1-in.).
2. Place the large foil pans in the drying oven at 115 °C (239 °F) for at least 12 hours. Mix the sample by hand numerous times during the drying period.
3. Remove the large foil pans from the drying oven.
4. Remove a sample of about 100 grams from each large foil pan.
5. Record the tare weight of each small foil drying pan.
6. Place the 100g wet sample in the small foil drying pan and spread the sample out evenly (do this twice if there are two samples).
7. Record the total combined gross weight of the foil drying pan and the 100 gram dried sample.
8. Calculate the net sample weight (subtract the gross weight from the tare weight).
9. Place the foil sample pan in the drying oven at 115 °C (239 °F) for at least 1 hour.
10. Remove the foil sample pan from the oven and measure the total gross weight.
11. Determine the net weight of the dried sample by subtracting the gross weight from the tare weight.
12. Calculate the percentage moisture (wet basis) of the dried feedstock samples.
13. The samples must be less than 3% moisture before proceeding.
14. Measure the tare weight of a large foil pan.
15. Using the large foil pan, measure out approximately 200 grams of dried (< 3% moisture) feedstock sample (200 g + tare weight of the large foil pan).
16. Measure out 800 grams of tap water.
17. Hand mix the 800 grams of water with the 200 gram feedstock sample in the large foil pan.
18. As a check,
19. Measure the gross pan weight.
20. Determine the wet net weight (gross – pan tare).
21. The wet net weight should be approximately 1000 grams.

II Ram Dewatering Test Procedure

1. Measure the tare weight of the compression tube.
2. Hand fill the compression tube with wet feedstock (at 80% moisture).
3. Measure the gross weight of the filled compression tube.
4. Compress the tube to the target hydraulic pressure for 10 seconds.
5. Release and retract the hydraulic jack.
6. Measure the gross weight of the compressed sample cylinder.
7. Remove the pressed sample from the compression cylinder using the shaft punch.
8. Measure the tare weight of the foil sample pan.
9. Measure the gross weight of the foil sample pan and pressed sample.
10. Place sample in oven at 115 °C (239 °F) for 3 hours.
11. Measure the gross weight of the dried sample.
12. Calculate the percentage moisture in the as pressed condition.

8.3 Results of Compressions Tests

Table 8-1 lists (and Figure 8-1 shows) the percent moisture content that was in each paper sample after it had been mechanically dewatered at the compression indicated. If the moisture content percentage is above 25% moisture content wet then the material cannot be used as a fuel sources as it has too high a moisture content to allow for easy combustion. The numbers of each sample test at 80% and at 50% rule the current use of just compressing and dewatering the samples out. The data shows that across the test samples and at both 80% and 50 % moisture levels the moisture percentage show a steady decrease as the psi levels used in the compaction of each test are increased. With the increase in psi pressure the amount of water is all but removed at the higher levels and the material is just being compacted into a much denser form. With each sample test of paper the percentage numbers of each test for each sample varied between 1 to 5% in either direction of the percentage scale of all tests 1 through 5 across three different paper sample with several wide spread variations in percentage data that are explainable by the amount of initial moisture in the paper that was used in the test pipe, how hard packed the amount of material was in the test pipe and the kind of paper used. In the 80% moisture sample white office paper was used, which was thicker than the shredded magazine paper used for the 50 % moisture test, which would allow for more moisture absorption in the thicker paper but more moisture to be squeezed out from the thinner paper and allow for more compaction at the same pressure. Figure 8-2 shows compresses paper slugs after dewatering, then drying. From left to right, this shows test pressures from 1000 to 12000 psi.

The testing for switchgrass was the same as the testing done on the samples of paper. There were three tests done on the sample as was done for the paper test, but only the 80 % moisture content testing was done and the 50% moisture content testing was not done. The initial moisture content of the switchgrass as it was received was calculated at 11.1 % moisture content. During the 80% moisture content tests, the amount of water was 800g water to 200g of dry switchgrass sample to make about an 80% moisture content mixture to use for testing. For the test the switchgrass was cut into much smaller pieces before water was added to it, to allow for the same amount of material to take up less space than the uncut material was currently taking up in the tin pans. After compressing the switchgrass sample compressed at 12000 had about the same moisture content percentages as the paper samples did after being compressed at the sample psi pressure. These results would indicate that switchgrass that was extremely wet when compressed at a high compression psi than tested at could be dewatered enough to allow for the materials to be used as fuel (Table 8-2 and Figure 8-3).

Table 8-1. Paper Dewatering Data.

		Paper	Paper	Paper
		Sample 1	Sample 2	Sample 3
	Compres	moisture	moisture	moisture
	Stress	Content	Content	Content
	psi	Wet Basis	Wet Basis	Wet Basis
Test 0	0			
Test 1	1000	43.0%	41.9%	40.5%
Test 2	2000	37.7%	37.1%	34.4%
Test 3	4000	32.9%	32.5%	32.5%
Test 4	8000	31.9%	30.3%	30.0%
Test 5	12000	31.4%	28.4%	28.7%
	50 % MO	Paper	Paper	Paper
		Sample 1	Sample 2	Sample 3
	Compres	moisture	moisture	moisture
	Stress	Content	Content	Content
	psi	Wet Basis	Wet Basis	Wet Basis
Test 0	0			
Test 1	1000	47%	47.0%	46%
Test 2	2000	37%	38.5%	38%
Test 3	4000	33%	33.0%	37%
Test 4	8000	26%	29.0%	31%
Test 5	12000	28%	29.2%	33%

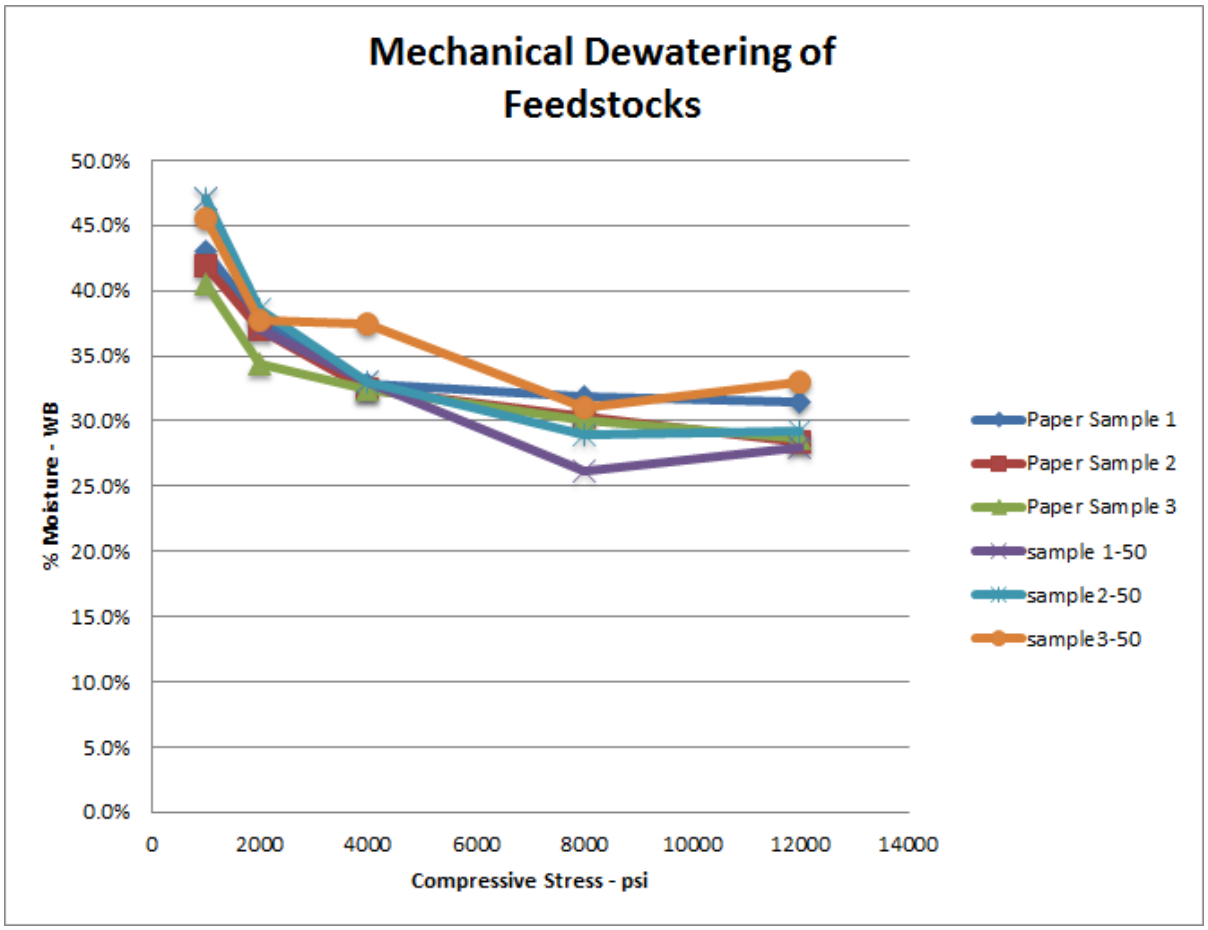

Figure 8-1. Compression Dewatering of Paper Samples.

Figure 8-2. Compressed Paper Test Slugs.

Table 8-2. Switch Grass Samples for Compression.

	Switch grass	Switch Grass	Switch Grass
	Sample 1	Sample 2	Sample 3
Compres	moisture	moisture	moisture
Stress	Content	Content	Content
psi	Wet Basis	Wet Basis	Wet Basis
0			
1000	46.20%	47.9%	50.9%
2000	41.50%	56.0%	41.3%
4000	39.10%	39.6%	36.4%
8000	37.00%	37.4%	36.0%
12000	36.30%	34.5%	35.1%

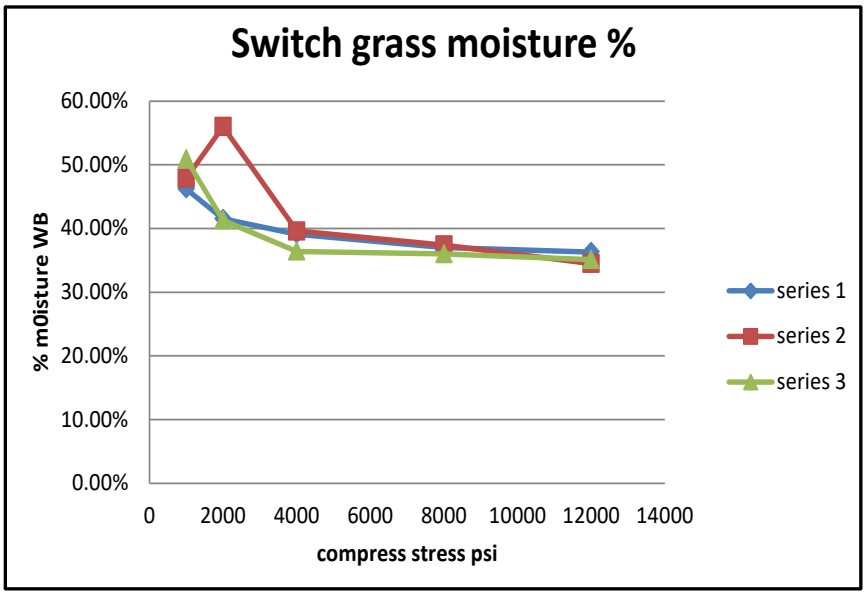

Figure 8-3. Results of Switch Grass Compression Test.

When paper was used the amount of moisture percentage in the remaining dried sample was still too high even in with the psi being between 8,000 to 12,000 when the test was performed it was found that the moisture content was still too high at around 28% moisture content. These results also occurred with the switchgrass tests with the moisture content of the lowest sample after dewatering was 34.5 % moisture content.

After the materials had been dewatered and pressed at the psi test point the slugs that were created were dried in an oven for several hours to remove moisture and to see how well the slugs of the material being tested at that particular moisture content held up when heated. The paper at the 80% test held its shape well, both when it was wet and had been pressed and also when the samples had been exposed to 115 °C (239 °F) heat for 3 to 4 hours to dry them and to see if prolonged drying would reduce the moisture down to 25% or lower. At lower compression psi levels the paper slug was bigger in size and could be broken apart more easily and had a higher moisture content percentage after drying. The higher the compression, the denser the paper slugs, which made breaking them apart much more difficult. The denser paper pellets moisture content was around 26% when compressed to 12,000 compress stress psi or just above the desired 25% moisture content of materials.

With compressing of switchgrass samples the switchgrass held its shape well after it had been compressed while each sample was still wet and had not been dried for several hours. After drying the switchgrass slugs pressed at the first 4 psi test pressures broke when picked up and handled, while the switchgrass sample pressed at 12,000 psi compress stress pressure barely maintained its shape when picked up, but the round shape of the switchgrass slug could still be made out.

With the data showing that even when switchgrass and paper were pressed at a high psi pressure that the amount of moisture pressed out was not lowered enough in terms of moisture percentage in the sample to allow for the materials to be used for burning as a fuel source. Paper at 50% moisture content was able to be dewatered down to the point of having 26% moisture content and that result was created by pressing the paper at 12,000 stress pressure psi limit on the bottle jack gauge. Switch grass had a relatively low initial moisture content percentage as received than paper.

8.4 Equipment and Procedures

Several different types of equipment were used during testing and each had a specific function during the testing procedure. The main piece of equipment used was a bottle jack that had a rated 12 ton load limit capacity and was manufactured by the Central Hydraulic Company. The bottle jack rested on two metal flat weights that then rested on a shop press frame made by the same company that made the bottle jack. The second piece of equipment that was used during testing was an oven that was used to dry samples. The oven was manufactured by Thermo Scientific with the type being the **Precision** model. An electronic scale with a 3,100g capacity was used for measuring all samples weight, the weight of the metal pipes both empty and full of test samples as well as the test samples that have been compressed before drying and the samples weights after drying. Twelve small tin pans were used to hold the compressed sample slugs to allow them to be weighed and then put into the oven with each sample being identifiable by the numbers on each of the pans. Six metal pipe sections were used for the forming of the samples and to hold

the sample in place while they were compressed under different psi loads by the bottle jack. Two five- gallon buckets were used to collect the necessary samples of switchgrass and horse manure while shredded paper material was collected from the local paper recycling box as well as the shredder itself. Two large foil tins or pans depending on what material was being tested were used during finding out the moisture content as collected of the current material type.

Several methods and analytical tools were used in the collection of the data acquired from testing the moisture content percentage on paper both at 50% and 80% moisture content as well as moisture content on switchgrass at 80% and as-received samples of horse manure. The test done to determine the as-received moisture content used the wet basis formula to figure out the moisture percentage from the test material. Once the percentage moisture content was found of the initial material test sample of which a 100g sample from the material being test was taken weighed to get the weight of the sample wet and then dried in an oven for 1 hour to get a dry weight. After this first test was done on each material sample, each material was tested the same way. A 200g sample of paper and 200g sample of switchgrass were mixed with 800g of water to create 80% moisture content sample mixture for testing both types of material samples and 100g of paper and 100g of water were mixed to create the 50% moisture sample. Six pipes were filled with the test material packed down to about a ¼ -in. below the rim surface of the pipe. Each individual pipe was weighed empty to get the tare of the pipe and then with a sample in it to get the gross weight of the sample and pipe. Each sample then had the moisture mechanically pressed out of it by use of a piston and bottle jack setup on the jack press stand. After each sample was dewatered the weight of the sample still in the individual test pipe was taken. The sample was taken out of the pipe and put in a numbered tin pan that had been weighed to get its tare weight. The wet compressed sample was weighed in the pan and the weight of the pan and sample was recorded. The sample was placed in an oven and dried for several hours at 115 °C (239 °F). After drying the sample were weighed again to get a dry weight. The gross weight of the dry sample in the pan minus the tare weight was subtracted from the gross weight of the wet sample in the pan minus the tare weight of the pan. This procedure was done for each of the three sample batches and was done for each of the five compression stress test psi compression levels to get the required data results.

8.5 Conclusions

Paper after testing samples of 80 % moisture content as well as testing of sample composed of a 50% moisture content proved to be the easiest in terms of reducing moisture content around the 25% or under moisture content percentages needed for burning. The highest that paper was compressed at was 12000 compression stress psi pressure and the average moisture content at a 50 % moisture content was 29%. This should mean that any paper products that are to be pressed should be as dry as possible and by doubling the amount of psi pressure used to compress the paper the amount of moisture should be reduced to the point of the moisture percentage being 25% or under. When the tests at 80% and 50% were done different kinds of paper was used. At 80% it was plain shredded office paper, which held and absorbed a lot of moisture and compacted nicely and maintained shaped even after drying and at 50% it was printed thin magazine paper and this absorbed water as well be also allowed for more water to be pressed out of it and that the pressed sample was compressed to an even thinner size. It is recommended that, when compressing paper-based products, the maximum amount of pressure (psi) be used to allow for the greatest amount of moisture to be pressed out. This should result in the lowest

possible moisture percentage and also creates a very dense very dry slug that holds its shape and is great for burning for fuel. In terms of design if by just compressing the materials at a higher psi pressure does not work to bring the moisture content of the materials down to an acceptable moisture content percentage level then a drying device of some form may have to be incorporated into the design plan as well as a some type of grinder for reducing the particle size of the material as its going into the machine to be compressed.

Viewing the graphs and data tables of each of the materials tested and compressed at different moisture content levels and what the graphs show of the data pattern that developed there can be several conclusions made. One that the idea of using mechanical means to dewater materials down to a level of moisture content percentage that allows for full combustion and burning can be done. That a much higher psi pressure has to be used in compressing materials to allows for such a level or moisture content percentage to be reached. Materials such as animal waste may not be suitable for compression by mechanical means at high psi pressure. That the results from these tests on paper, switchgrass and manure can only be used as a baseline for gauging test data results as there may be many kinds of material that may be compressed and dewatered that have much higher or lower as-received moisture contents then the materials tested and hold their shapes and structural integrity better.

9. Conclusions and Implications for Future Research/Implementation

9.1 Conclusions from this Project

The prototype gasification system performed well, in terms of accepting unsorted, realistic waste mixtures, and converting the waste to exportable power. The reactor and system design described in sections 2 and 3 have proven gasification of mixed (unsorted) solid wastes without the need for pre-processing (the requirement for intensive pre-processing in other systems based on downdraft gasification has proven problematic). Additionally, our team demonstrated that our overall system approach destroys waste and produces net-positive electric output. Our new reactor design is a novel gasifier type that meets its purpose.

When we began this project, we did not know what composition of syngas to expect. Most literature describes syngas from downdraft systems, which contain mostly C1 compounds. Our reactor is a modified version of an updraft gasifier. Experimentally, we found our syngas to be much higher in energy than could be accounted for by H_2, CO, and CH_4, etc. Then analytically, we found that the syngas was very similar to commercial liquid fuels (Appendix E). This updraft-like reactor, plus the oil reflux (below) contribute to the favorable overall energy balance.

The oil quench tank described in section 3.5 turned out to be very important to the overall process for a number of reasons. First, it performed its main job of removing tars from the syngas very well. Second, it very effectively, sharply reduced the temperature of the syngas coming out of the reactor, while maintaining itself at a constant temperature. We believe this is due to the entrained, emulsified water that enters the quencher as steam. As long as water is present, it keeps the temperature of the quencher below the boiling point of water. Third, refluxing the accumulating tars and pyro oils back into the gasifier greatly increased the energy content of the syngas (section 4.5.2

9.2 Additional Research Needed

There are several areas of engineering work left before moving towards a long term demonstration at a military site. These include integrating a shredder and automatic waste feed system; establishing redundant PLC logic controls for extra safety; and of course, putting the whole system into shipping containers.

The above items require work, but that work is well understood, using commercial technology. The one significant engineering problem that remains, is determine the most efficient way to introduce syngas into a diesel engine. Appendix C below, gives a detailed discussion of the benefits of using a diesel engine for this application. In short, diesel is more flexible in terms of syngas quality and quantity it will accept; and diesels are the dominant engine type in theater. However, the method of introducing the syngas, used in the project, is problematic. We introduced syngas into the engine air intake via the turbocharger, so the engine uses less liquid fuel because of the energy value in the syngas. This works up to a point, but by doing so, you displace air with the syngas. Therefore the engine becomes starved for oxygen at high rates of syngas feed, which causes the engine to run “rich” and produce soot. You want to maximize the

syngas feed because that means you are maximizing liquid fuel savings, and waste destruction throughput.

To solve this problem may require working with an engine manufacturer to figure out correct gas flow rates and turbo size and pressure to assure that adequate oxygen gets to the engine so it can run cleanly and efficiently (Appendix C).

9.3 Suggested Implementation

The author has participated in the Joint Defense Waste-to-Energy work group (JDW2E), which is hosted by the Navy. This working group is aware of this technology, and it is hoped that this report will generate interest among multiple services. The Air Force Research Lab's periodic WTE workshops have also been brief on this technology.

The prototype system developed under this project was a full scale, proof of concept. It is suitable for short term demonstrations, and SUNY Cobleskill has sought funds for upgrades to make the system more mobile and automated; better for short demonstrations in multiple types of venues.

To move this technology towards DoD contingency operations, the next logical steps would be to construct a new version in a 20-ft container, or three TRICONs, that incorporates all technical lessons-learned from this project, and an automated waste feed system. This version would be suitable for long term military testing at a location such as the Contingency Basing Integration Technology Evaluation Center at Fort Leonard Wood, MO – also the home of the Engineer School. There, the gasifier could be run and observed by soldiers in training; soldier waste disposal would be somewhat realistic; and the power output could be monitored and integrated into the camp micro-grid. There's another test center at Tyndall Air Force Base (AFB), which has hosted WTE demonstrations and a containerized system, could easily be moved there for Air Force exposure.

Once we are in a position for long term demonstration, it will be time to engage with PM-E2S2 to work on a formal technology transfer agreement.

10. Bibliography

ANSYS, Inc. 2014. ANSYS FLUENT. 14.5 Theory Guide Help Document, http://www.ansys.com

Bain, R. 2006. "Thermochemical Technologies for Conversion of Biomass to Fuels and Chemicals." Biomass to Chemicals and Fuels; Science, Technology and Public Policy. Presented at Rice University, Houston Texas, September 26, 2006.

Barrio, M., B. Gobel, H. Risnes, U. Henricksen, J. E. Hustad, and L. H. Sorensen. 2006. "Steam Gasification of Wood Char and the Effect of Hydrogen Inhibition on the Chemical Kinetics." In A.V. Bridgwater (ed.). *Progress in Thermochemical Biomass Conversion*. vol. 1. Oxford, United Kingdom: Blackwell Science, pp. 32–46.

Curkeet, R. 2011. *Wood Combustion Basics*. PowerPoint Presentation. EPA Workshop, March 2, 2011. Salt Lake City, UT, http://www.epa.gov/burnwise/workshop2011/WoodCombustion-Curkeet.pdf

Farooq, Abid, Moinuddin Ghauri, Mujtaba Hussain Jaffery, and Khurram Shahzad. 2103. "Modeling of Biomass Gasification with CO_2 as Gasifying Agent." Sci. Int (Lahore) 25(3):497-500.

Inayat, Abrar, Murni Melati Ahmad, M. Ibrahim A. Mutalib, and M. Khairuddin Yunus. 2009. "Kinetic Modeling of Biomass Steam Gasification System for Hydrogen Production with CO_2 Adsorption." *Proceedings of International Conference for Technical Postgraduates, Kuala Lumpur, Malaysia, 14-15 December, 2009.*

Kumar, Ajay, David D. Jones, and Milford A. Hanna. 2009. "Thermochemical Biomass Gasification: A Review of the Current Status of the Technology." *Energies* 2:556-581.

Kumar, M., and A. F. Ghoniem. 2012. "Multiphysics Simulations of Entrained Flow Gasification. Part I: Validating the Nonreacting Flow Solver and the Particle Turbulent Dispersion Model." *Energy Fuels* 26(1):451-463.

McBroom, M. "The Woody Cell Wall." Lecture Slides drawn from Roger M. Rowell (ed.). 2005. *Handbook of Wood Chemistry and Wood Composites.* Boca Raton, FL: CRC Press, http://titus.nsm.iup.edu/jford/projects/Cellulose/Wood_McBroom.pdf
(cited in John Ford. 2011. *The Conversion of Cellulosic Materials to Simple Organics*, http://titus.nsm.iup.edu/jford/projects/Cellulose/index.html

O'Brien, T. J., M. Syamlal, and C. Guenther. 2003. "Computational Fluid Dynamics Simulations of Chemically Reactive Fluidized Bed Processes." *Third International Conference on CFD in the Minerals and Process Industries, CSIRO, Melbourne, Australia, 2003*.

Radmanesh, R., J. Chaouki, and C. Guy. 2006. "Biomass Gasification in a Bubbling Fluidized Bed Reactor: Experiments and Modeling." *AIChE Journal* 52(12):4258-4272.

Ronsch, S., and H Wagner. 2012. *Calculation of Heating Values for the Simulation of Thermochemical Conversional Plants with Aspen Plus*. Leipzig, Germany: Deutsches Biomasseforschungszentrum, https://www.dbfz.de/web/uploads/media/Roensch_und_Wagner_2012_Calculation_of_heating_values_with_Aspen_Plus.pdf

Sharma, A. 2011. "Modeling and Simulation of a Downdraft Biomass Gasifier. Model Development and Validation." *Energy Conversion and Management* 52:1386-1396.

Shi, S., C. Guenther, and S. Orsino. 2007. "Numerical Study of Coal Gasification Using Eulerian-Eulerian Multiphase Model." *POWER2007-22144*. San Antonio, TX: ASME Power Conference, pp 497-505.

Silaen, A., and T. Wang. 2012. "Investigation of the Coal Gasification Process under Various Operating Conditions Inside a Two-Stage Entrained Flow Gasifier." *J. Thermal Sci. Eng. Appl*. 4(2).

Solar Energy Research Institute (SERI). 1988. *Handbook of Biomass Downdraft Gasifier Engine Systems*. Golden, CO: SERI, http://taylor.ifas.ufl.edu/documents/Handbook_of_Biomass_Downdraft_Gasifier_Engine_Systems.pdf

Syamlal, M., and L. A. Bissett. 1992. *METC Gasifier Advanced Simulation (MGAS) Model*. Technical note, DOE/METC-92/4108, NITS/DE92001111, Springfield, VA: National Technical Information Services.

Syed, Shabbar, Isam Janajreh, and Chaouki Ghenai. 2012. "Thermodynamics Equilibrium Analysis within the Entrained Flow Gasifier Environment." *Int J. of Thermal & Environmental Engineering*. 4(1):47-54, http://www.iasks.org/sites/default/files/ijtee20120401047054.pdf

Vaezi, M., M. Passandideh, M. Moghiman, and M. Charmchi. 2008. "Modeling Biomass Gasification: A New Approach to Utilize Renewable Sources of Energy." *Proceedings of IMECE2008*. Oct 31 – Nov 6, 2008. Boston, MA, http://profdoc.um.ac.ir/articles/a/1008098.pdf

USEPA. 1986. Treatment Technologies for Dioxin-Containing Wastes. EPA/600/2-86/096. October 1986.

Wu, Wei, Katsuya Kawamoto, and Hidetoshi Kuramochi. 2006. "Hydrogen-Rich Synthesis Gas Production from Waste Wood via Gasification and Reforming Technology for Fuel Cell Application." J. Mater. Cycles Waste Management 8:70-77, http://www.environmental-expert.com/Files%5C6063%5Carticles%5C9025%5C1.pdf

Wu, Y., P. J. Smith, J. Zhang, J. N. Thornock, and G. Yue. 2010. "Effects of Turbulent Mixing and Controlling Mechanisms in an Entrained Flow Coal Gasifier." *Energy Fuels* 24(2):1170-1175.

Appendices

Appendix A: Points of Contact

Point of Contact	Organization	Phone & E-mail	Role in Project
Mr. Stephen D. Cosper	U.S. Army ERDC-CERL	217-398-5569 Stephen.D.Cosper@usace.army.mil	Project Manager
Dr. Paul Amodeo	SUNY Cobleskill Center for Environmental Science and Technology	518-255-5384 AmodeoPA@cobleskill.edu	PI for technology development

Appendix B: Supporting Data Derived from Syngas Analysis Reports

The following pages shows initial GC work and calorific data for syngas samples during a series of IIFPRG trials in November 2013, processing a variety of feedstocks. Table B-1 summarizes this data by feedstock. For the measured HHV, the syngas was passed through a calorimeter and therefore includes all gases present, i.e., those not capture in the initial GC data which only looked for C1 species. Subsequent GC work (Appendix E) measures the full extent of organics.

Table B-1. GC Data Summary.

Feedstock into IIFPRG	Vol. % H_2	Vol. % O2	Vol. % N_2	Vol. % CH_4	Vol. % CO	Vol. % CO_2	Measured HHV (BTU/SCF)
70% woodchips, 30% rubber by weight	5.7	2.1	62.3	1.2	21.5	7.2	99.5
50% Cafeteria waste (wet food, liquids, plastic wrappers, packaging); 50% wood chips	5.8	1.7	59.0	1.5	23.9	8.2	111.5
Woodchips	6.8	2.1	60.2	1.8	22.3	9.0	104.1
70% woodchips, 30% HDPE	5.4	1.9	60.8	1.8	20.1	7.6	100.5
Pine chips	6.0	2.6	61.6	1.7	17.3	10.8	92.5

SUNY RF The Research Foundation for The State University of New York

SUNY Cobleskill

Synthetic Gas Analysis Report

Sample No.:	SB112113-1455
Sample Date:	11/21/2013
Sample Description:	IIRPG, 70% Cooksburg wood chips, 30% rubber by weight, 113 BTU on Calorval
Analysis Date:	11/21/2013

Analysis by Gas Chromatograph

Component	Chemical Formula	Analysis % Volume	Analysis % mole	Analysis % Mass
Hydrogen	H2	4.8%	4.8%	0.3%
Oxygen	O2	2.8%	2.8%	3.2%
Nitrogen	N2	63.9%	63.9%	64.3%
Methane	CH4	1.0%	1.0%	0.6%
Carbon Monoxide	CO	20.8%	20.8%	21.0%
Carbon Dioxide	CO2	6.7%	6.7%	10.6%
Water	H2O	0.0%	0.0%	0.0%
Acetylene	C2H2	0.0%	0.0%	0.0%
Ethylene	C2H4	0.0%	0.0%	0.0%
Ethane	C2H6	0.0%	0.0%	0.0%
	Total =	100%	100%	100%

Stoichiometric Combustion Products:

CO2	0.345	lb per lb of combustible
H2O	0.044	lb per lb of combustible
N2	0.565	lb per lb of combustible

CO2	0.218	ft^3 per ft^3 of combustible
H2O	0.068	ft^3 per ft^3 of combustible
N2	0.557	ft^3 per ft^3 of combustible

Calculated Values:

Molecular Weight - MW	27.83	
Resultant Gas Constant - R	55.52	Ft-lbf/lbm/R
Specific Gravity - SG	0.961	
Density at 70 F & 14.7 psia	0.0720	lbm/ft^3
Ratio of Specific Heats - k	1.3868	Cp/Cv
Critical Pressure Ratio - CPR	0.5198	
High Heating Value - HHV	93	BTU/SCF
Low Heating Value - LHV	89	BTU/SCF
Stoichometric Air:Fuel Ratio	0.704	by Volume
Stoichometric Air:Fuel Ratio	0.656	by Mass
Low Flammability Limit in Air	2.8%	LFL
High Flammability Limit in Air	19.2%	HFL
Auto Ignition Temperature	1,091	deg F

Technician Initials:	JTX
Report Date:	11/22/2013

SUNY RF The Research Foundation for The State University of New York

SUNY Cobleskill

Synthetic Gas Analysis Report

Sample No.:	SB112113-1150
Sample Date:	11/21/2013
Sample Description:	IIRGP, 50% Cafeteria Waste, 50% Cooksburg wood chips, 127 BTU on Calorval
Analysis Date:	11/21/2013

Analysis by Gas Chromatograph

Component	Chemical Formula	Analysis % Volume	Analysis % mole	Analysis % Mass
Hydrogen	H2	6.3%	6.3%	0.5%
Oxygen	O2	1.0%	1.0%	1.2%
Nitrogen	N2	57.6%	57.6%	58.6%
Methane	CH4	1.6%	1.6%	0.9%
Carbon Monoxide	CO	25.1%	25.1%	25.5%
Carbon Dioxide	CO2	8.3%	8.3%	13.3%
Water	H2O	0.0%	0.0%	0.0%
Acetylene	C2H2	0.0%	0.0%	0.0%
Ethylene	C2H4	0.0%	0.0%	0.0%
Ethane	C2H6	0.0%	0.0%	0.0%
	Total =	100%	100%	100%

Stoichiometric Combustion Products:

CO2	0.427	lb per lb of combustible
H2O	0.063	lb per lb of combustible
N2	0.733	lb per lb of combustible

CO2	0.267	ft^3 per ft^3 of combustible
H2O	0.096	ft^3 per ft^3 of combustible
N2	0.714	ft^3 per ft^3 of combustible

Calculated Values:

Molecular Weight - MW	27.55	
Resultant Gas Constant - R	56.10	Ft-lbf/lbm/R
Specific Gravity - SG	0.951	
Density at 70 F & 14.7 psia	0.0713	lbm/ft^3
Ratio of Specific Heats - k	1.3833	Cp/Cv
Critical Pressure Ratio - CPR	0.5166	
High Heating Value - HHV	118	BTU/SCF
Low Heating Value - LHV	113	BTU/SCF
Stoichometric Air:Fuel Ratio	0.904	by Volume
Stoichometric Air:Fuel Ratio	0.848	by Mass
Low Flammability Limit in Air	3.5%	LFL
High Flammability Limit in Air	23.6%	HFL
Auto Ignition Temperature	1,088	deg F

Technician Initials:	JTX
Report Date:	11/22/2013

SUNY RF The Research Foundation for The State University of New York

SUNY Cobleskill

Synthetic Gas Analysis Report

Sample No.:	SB112113-1217
Sample Date:	11/21/2013
Sample Description:	IIRGP, 50% Cafeteria Waste, 50% Cooksburg wood chips, 124 BTU on Calorval
Analysis Date:	11/21/2013

Analysis by Gas Chromatograph

Component	Chemical Formula	Analysis % Volume	Analysis % mole	Analysis % Mass
Hydrogen	H2	5.3%	5.3%	0.4%
Oxygen	O2	2.3%	2.3%	2.6%
Nitrogen	N2	60.3%	60.3%	60.6%
Methane	CH4	1.4%	1.4%	0.8%
Carbon Monoxide	CO	22.7%	22.7%	22.8%
Carbon Dioxide	CO2	8.1%	8.1%	12.7%
Water	H2O	0.0%	0.0%	0.0%
Acetylene	C2H2	0.0%	0.0%	0.0%
Ethylene	C2H4	0.0%	0.0%	0.0%
Ethane	C2H6	0.0%	0.0%	0.0%
	Total =	100%	100%	100%

Stoichiometric Combustion Products:

CO2	0.381	lb per lb of combustible
H2O	0.053	lb per lb of combustible
N2	0.643	lb per lb of combustible

CO2	0.241	ft^3 per ft^3 of combustible
H2O	0.081	ft^3 per ft^3 of combustible
N2	0.633	ft^3 per ft^3 of combustible

Calculated Values:

Molecular Weight - MW	27.84	
Resultant Gas Constant - R	55.51	Ft-lbf/lbm/R
Specific Gravity - SG	0.961	
Density at 70 F & 14.7 psia	0.0721	lbm/ft^3
Ratio of Specific Heats - k	1.3841	Cp/Cv
Critical Pressure Ratio - CPR	0.5194	
High Heating Value - HHV	105	BTU/SCF
Low Heating Value - LHV	100	BTU/SCF
Stoichometric Air:Fuel Ratio	0.801	by Volume
Stoichometric Air:Fuel Ratio	0.748	by Mass
Low Flammability Limit in Air	3.1%	LFL
High Flammability Limit in Air	21.0%	HFL
Auto Ignition Temperature	1,090	deg F

Technician Initials:	JTX
Report Date:	11/22/2013

SUNY RF The Research Foundation for The State University of New York

SUNY Cobleskill

Synthetic Gas Analysis Report

Sample No.:	SB112113-1335
Sample Date:	11/21/2013
Sample Description:	IIRPG, 70% Cooksburg wood chips, 30% rubber by weight, 133 BTU on Calorval
Analysis Date:	11/21/2013

Analysis by Gas Chromatograph

Component	Chemical Formula	Analysis % Volume	Analysis % mole	Analysis % Mass
Hydrogen	H2	6.5%	6.5%	0.5%
Oxygen	O2	1.3%	1.3%	1.6%
Nitrogen	N2	60.7%	60.7%	61.9%
Methane	CH4	1.4%	1.4%	0.8%
Carbon Monoxide	CO	22.1%	22.1%	22.6%
Carbon Dioxide	CO2	7.6%	7.6%	12.2%
Water	H2O	0.0%	0.0%	0.0%
Acetylene	C2H2	0.4%	0.4%	0.4%
Ethylene	C2H4	0.0%	0.0%	0.0%
Ethane	C2H6	0.0%	0.0%	0.0%
	Total =	100%	100%	100%

Stoichiometric Combustion Products:

CO2	0.377	lb per lb of combustible
H2O	0.060	lb per lb of combustible
N2	0.660	lb per lb of combustible

CO2	0.243	ft^3 per ft^3 of combustible
H2O	0.096	ft^3 per ft^3 of combustible
N2	0.680	ft^3 per ft^3 of combustible

Calculated Values:

Molecular Weight - MW	27.44	
Resultant Gas Constant - R	56.32	Ft-lbf/lbm/R
Specific Gravity - SG	0.947	
Density at 70 F & 14.7 psia	0.0710	lbm/ft^3
Ratio of Specific Heats - k	1.3843	Cp/Cv
Critical Pressure Ratio - CPR	0.5157	
High Heating Value - HHV	106	BTU/SCF
Low Heating Value - LHV	101	BTU/SCF
Stoichometric Air:Fuel Ratio	0.810	by Volume
Stoichometric Air:Fuel Ratio	0.750	by Mass
Low Flammability Limit in Air	3.1%	LFL
High Flammability Limit in Air	21.8%	HFL
Auto Ignition Temperature	1,092	deg F

Technician Initials:	JTX
Report Date:	11/22/2013

SUNY RF The Research Foundation for The State University of New York

SUNY Cobleskill

Synthetic Gas Analysis Report

Sample No.:	SB112113-1110
Sample Date:	11/21/2013
Sample Description:	IIRPG, Cooksburg wood chips, 121 BTU on Calorval
Analysis Date:	11/21/2013

Analysis by Gas Chromatograph

Component	Chemical Formula	Analysis % Volume	Analysis % mole	Analysis % Mass
Hydrogen	H2	6.4%	6.4%	0.5%
Oxygen	O2	1.7%	1.7%	1.9%
Nitrogen	N2	58.5%	58.5%	59.4%
Methane	CH4	1.6%	1.6%	0.9%
Carbon Monoxide	CO	23.2%	23.2%	23.6%
Carbon Dioxide	CO2	8.6%	8.6%	13.7%
Water	H2O	0.0%	0.0%	0.0%
Acetylene	C2H2	0.0%	0.0%	0.0%
Ethylene	C2H4	0.0%	0.0%	0.0%
Ethane	C2H6	0.0%	0.0%	0.0%
	Total =	100%	100%	100%

Stoichiometric Combustion Products:

CO2	0.396	lb per lb of combustible
H2O	0.063	lb per lb of combustible
N2	0.697	lb per lb of combustible

CO2	0.248	ft^3 per ft^3 of combustible
H2O	0.097	ft^3 per ft^3 of combustible
N2	0.680	ft^3 per ft^3 of combustible

Calculated Values:

Molecular Weight - MW	27.60	
Resultant Gas Constant - R	56.00	Ft-lbf/lbm/R
Specific Gravity - SG	0.953	
Density at 70 F & 14.7 psia	0.0714	lbm/ft^3
Ratio of Specific Heats - k	1.3829	Cp/Cv
Critical Pressure Ratio - CPR	0.5170	
High Heating Value - HHV	112	BTU/SCF
Low Heating Value - LHV	107	BTU/SCF
Stoichometric Air:Fuel Ratio	0.860	by Volume
Stoichometric Air:Fuel Ratio	0.800	by Mass
Low Flammability Limit in Air	3.2%	LFL
High Flammability Limit in Air	22.2%	HFL
Auto Ignition Temperature	1,085	deg F

Technician Initials:	JTX
Report Date:	11/22/2013

SUNY RF The Research Foundation for The State University of New York

SUNY Cobleskill

Synthetic Gas Analysis Report

Sample No.:	SB112113-1030
Sample Date:	11/21/2013
Sample Description:	IIRPG, Cooksburg wood chips, 121 BTU on calorval
Analysis Date:	11/21/2013

Analysis by Gas Chromatograph

Component	Chemical Formula	Analysis % Volume	Analysis % mole	Analysis % Mass
Hydrogen	H2	6.2%	6.2%	0.4%
Oxygen	O2	2.0%	2.0%	2.3%
Nitrogen	N2	58.5%	58.5%	58.7%
Methane	CH4	2.1%	2.1%	1.2%
Carbon Monoxide	CO	20.4%	20.4%	20.5%
Carbon Dioxide	CO2	10.7%	10.7%	16.8%
Water	H2O	0.0%	0.0%	0.0%
Acetylene	C2H2	0.0%	0.0%	0.0%
Ethylene	C2H4	0.0%	0.0%	0.0%
Ethane	C2H6	0.0%	0.0%	0.0%
	Total =	100%	100%	100%

Stoichiometric Combustion Products:

CO2	0.355	lb per lb of combustible
H2O	0.067	lb per lb of combustible
N2	0.669	lb per lb of combustible

CO2	0.225	ft^3 per ft^3 of combustible
H2O	0.104	ft^3 per ft^3 of combustible
N2	0.660	ft^3 per ft^3 of combustible

Calculated Values:

Molecular Weight - MW	27.93	
Resultant Gas Constant - R	55.33	Ft-lbf/lbm/R
Specific Gravity - SG	0.964	
Density at 70 F & 14.7 psia	0.0723	lbm/ft^3
Ratio of Specific Heats - k	1.3789	Cp/Cv
Critical Pressure Ratio - CPR	0.5196	
High Heating Value - HHV	107	BTU/SCF
Low Heating Value - LHV	102	BTU/SCF
Stoichometric Air:Fuel Ratio	0.836	by Volume
Stoichometric Air:Fuel Ratio	0.767	by Mass
Low Flammability Limit in Air	2.9%	LFL
High Flammability Limit in Air	20.1%	HFL
Auto Ignition Temperature	1,082	deg F

Technician Initials:	JTX
Report Date:	11/22/2013

SUNY RF The Research Foundation for The State University of New York

SUNY Cobleskill

Synthetic Gas Analysis Report

Sample No.:	SB112013-1400
Sample Date:	11/20/2013
Sample Description:	IIRPG, 70% Cooksburg wood chips, 30% HDPE by weight, 181 BTU on Calorval
Analysis Date:	11/20/2013

Analysis by Gas Chromatograph

Component	Chemical Formula	Analysis % Volume	Analysis % mole	Analysis % Mass
Hydrogen	H2	5.7%	5.7%	0.4%
Oxygen	O2	2.7%	2.7%	3.1%
Nitrogen	N2	59.9%	59.9%	61.1%
Methane	CH4	2.2%	2.2%	1.3%
Carbon Monoxide	CO	19.2%	19.2%	19.5%
Carbon Dioxide	CO2	6.9%	6.9%	11.0%
Water	H2O	0.0%	0.0%	0.0%
Acetylene	C2H2	0.0%	0.0%	0.0%
Ethylene	C2H4	3.5%	3.5%	3.6%
Ethane	C2H6	0.0%	0.0%	0.0%
	Total =	100%	100%	100%

Stoichiometric Combustion Products:

CO2	0.342	lb per lb of combustible
H2O	0.066	lb per lb of combustible
N2	0.650	lb per lb of combustible

CO2	0.284	ft^3 per ft^3 of combustible
H2O	0.171	ft^3 per ft^3 of combustible
N2	1.029	ft^3 per ft^3 of combustible

Calculated Values:

Molecular Weight - MW	27.48	
Resultant Gas Constant - R	56.23	Ft-lbf/lbm/R
Specific Gravity - SG	0.949	
Density at 70 F & 14.7 psia	0.0711	lbm/ft^3
Ratio of Specific Heats - k	1.3801	Cp/Cv
Critical Pressure Ratio - CPR	0.5156	
High Heating Value - HHV	102	BTU/SCF
Low Heating Value - LHV	97	BTU/SCF
Stoichometric Air:Fuel Ratio	0.800	by Volume
Stoichometric Air:Fuel Ratio	0.751	by Mass
Low Flammability Limit in Air	3.0%	LFL
High Flammability Limit in Air	19.3%	HFL
Auto Ignition Temperature	1,202	deg F

Technician Initials:	JTX
Report Date:	11/21/2013

SUNY RF The Research Foundation for The State University of New York

SUNY Cobleskill

Synthetic Gas Analysis Report

Sample No.:	SB112013-1330
Sample Date:	11/20/2013
Sample Description:	IIRPG, 70% Cooksburg wood chips, 30% High Density Poly Ethylene by weight, 142 BTU on Calorval
Analysis Date:	11/20/2013

Analysis by Gas Chromatograph

Component	Chemical Formula	Analysis % Volume	Analysis % mole	Analysis % Mass
Hydrogen	H2	5.1%	5.1%	0.4%
Oxygen	O2	1.0%	1.0%	1.1%
Nitrogen	N2	61.6%	61.6%	62.0%
Methane	CH4	1.4%	1.4%	0.8%
Carbon Monoxide	CO	21.0%	21.0%	21.1%
Carbon Dioxide	CO2	8.2%	8.2%	13.0%
Water	H2O	0.0%	0.0%	0.0%
Acetylene	C2H2	1.6%	1.6%	1.5%
Ethylene	C2H4	0.0%	0.0%	0.0%
Ethane	C2H6	0.0%	0.0%	0.0%
	Total =	100%	100%	100%

Stoichiometric Combustion Products:

CO2	0.354	lb per lb of combustible
H2O	0.052	lb per lb of combustible
N2	0.608	lb per lb of combustible

CO2	0.256	ft^3 per ft^3 of combustible
H2O	0.096	ft^3 per ft^3 of combustible
N2	0.748	ft^3 per ft^3 of combustible

Calculated Values:

Molecular Weight - MW	27.83	
Resultant Gas Constant - R	55.52	Ft-lbf/lbm/R
Specific Gravity - SG	0.961	
Density at 70 F & 14.7 psia	0.0720	lbm/ft^3
Ratio of Specific Heats - k	1.3823	Cp/Cv
Critical Pressure Ratio - CPR	0.5192	
High Heating Value - HHV	99	BTU/SCF
Low Heating Value - LHV	95	BTU/SCF
Stoichometric Air:Fuel Ratio	0.757	by Volume
Stoichometric Air:Fuel Ratio	0.705	by Mass
Low Flammability Limit in Air	2.9%	LFL
High Flammability Limit in Air	21.2%	HFL
Auto Ignition Temperature	1,122	deg F

Technician Initials:	JTX
Report Date:	11/21/2013

SUNY RF The Research Foundation for The State University of New York

SUNY Cobleskill

Synthetic Gas Analysis Report

Sample No.:	SB112013-1245
Sample Date:	11/20/2013
Sample Description:	IIRPG,Cooksburg wood chips, 141 BTU on calorval
Analysis Date:	11/20/2013

Analysis by Gas Chromatograph

Component	Chemical Formula	Analysis % Volume	Analysis % mole	Analysis % Mass
Hydrogen	H2	7.4%	7.4%	0.5%
Oxygen	O2	1.2%	1.2%	1.4%
Nitrogen	N2	56.0%	56.0%	57.2%
Methane	CH4	2.2%	2.2%	1.3%
Carbon Monoxide	CO	23.1%	23.1%	23.6%
Carbon Dioxide	CO2	9.6%	9.6%	15.5%
Water	H2O	0.0%	0.0%	0.0%
Acetylene	C2H2	0.5%	0.5%	0.4%
Ethylene	C2H4	0.0%	0.0%	0.0%
Ethane	C2H6	0.0%	0.0%	0.0%
	Total =	100%	100%	100%

Stoichiometric Combustion Products:

CO2	0.406	lb per lb of combustible
H2O	0.077	lb per lb of combustible
N2	0.760	lb per lb of combustible

CO2	0.262	ft^3 per ft^3 of combustible
H2O	0.122	ft^3 per ft^3 of combustible
N2	0.780	ft^3 per ft^3 of combustible

Calculated Values:

Molecular Weight - MW	27.41	
Resultant Gas Constant - R	56.38	Ft-lbf/lbm/R
Specific Gravity - SG	0.946	
Density at 70 F & 14.7 psia	0.0709	lbm/ft^3
Ratio of Specific Heats - k	1.3801	Cp/Cv
Critical Pressure Ratio - CPR	0.5149	
High Heating Value - HHV	120	BTU/SCF
Low Heating Value - LHV	114	BTU/SCF
Stoichometric Air:Fuel Ratio	0.933	by Volume
Stoichometric Air:Fuel Ratio	0.865	by Mass
Low Flammability Limit in Air	3.3%	LFL
High Flammability Limit in Air	23.5%	HFL
Auto Ignition Temperature	1,088	deg F

Technician Initials:	JTX
Report Date:	11/21/2013

SUNY RF The Research Foundation for The State University of New York

SUNY Cobleskill

Synthetic Gas Analysis Report

Sample No.:	SB111913-1515
Sample Date:	11/19/2013
Sample Description:	IIRPG,Cooksburg wood chips, 143 BTU on calorval
Analysis Date:	11/19/2013

Analysis by Gas Chromatograph

Component	Chemical Formula	Analysis % Volume	Analysis % mole	Analysis % Mass
Hydrogen	H2	7.8%	7.8%	0.6%
Oxygen	O2	1.1%	1.1%	1.3%
Nitrogen	N2	54.9%	54.9%	56.7%
Methane	CH4	2.1%	2.1%	1.2%
Carbon Monoxide	CO	25.5%	25.5%	26.3%
Carbon Dioxide	CO2	8.3%	8.3%	13.5%
Water	H2O	0.0%	0.0%	0.0%
Acetylene	C2H2	0.3%	0.3%	0.3%
Ethylene	C2H4	0.0%	0.0%	0.0%
Ethane	C2H6	0.0%	0.0%	0.0%
	Total =	100%	100%	100%

Stoichiometric Combustion Products:

CO2	0.447	lb per lb of combustible
H2O	0.080	lb per lb of combustible
N2	0.818	lb per lb of combustible

CO2	0.282	ft^3 per ft^3 of combustible
H2O	0.123	ft^3 per ft^3 of combustible
N2	0.817	ft^3 per ft^3 of combustible

Calculated Values:

Molecular Weight - MW	27.11	
Resultant Gas Constant - R	57.01	Ft-lbf/lbm/R
Specific Gravity - SG	0.936	
Density at 70 F & 14.7 psia	0.0702	lbm/ft^3
Ratio of Specific Heats - k	1.3825	Cp/Cv
Critical Pressure Ratio - CPR	0.5124	
High Heating Value - HHV	129	BTU/SCF
Low Heating Value - LHV	123	BTU/SCF
Stoichometric Air:Fuel Ratio	0.992	by Volume
Stoichometric Air:Fuel Ratio	0.932	by Mass
Low Flammability Limit in Air	3.6%	LFL
High Flammability Limit in Air	25.3%	HFL
Auto Ignition Temperature	1,087	deg F

Technician Initials:	JTX
Report Date:	11/20/2013

SUNY RF The Research Foundation for The State University of New York

SUNY Cobleskill

Synthetic Gas Analysis Report

Sample No.:	SB111913-1440
Sample Date:	11/19/2013
Sample Description:	IIRPG,Cooksburg wood chips, 142 BTU on calorval
Analysis Date:	11/19/2013

Analysis by Gas Chromatograph

Component	Chemical Formula	Analysis % Volume	Analysis % mole	Analysis % Mass
Hydrogen	H2	7.9%	7.9%	0.6%
Oxygen	O2	1.1%	1.1%	1.3%
Nitrogen	N2	55.4%	55.4%	56.7%
Methane	CH4	2.2%	2.2%	1.3%
Carbon Monoxide	CO	22.5%	22.5%	23.0%
Carbon Dioxide	CO2	10.2%	10.2%	16.4%
Water	H2O	0.0%	0.0%	0.0%
Acetylene	C2H2	0.8%	0.8%	0.7%
Ethylene	C2H4	0.0%	0.0%	0.0%
Ethane	C2H6	0.0%	0.0%	0.0%
	Total =	100%	100%	100%

Stoichiometric Combustion Products:

CO2	0.397	lb per lb of combustible
H2O	0.081	lb per lb of combustible
N2	0.761	lb per lb of combustible

CO2	0.262	ft^3 per ft^3 of combustible
H2O	0.130	ft^3 per ft^3 of combustible
N2	0.808	ft^3 per ft^3 of combustible

Calculated Values:

Molecular Weight - MW	27.36	
Resultant Gas Constant - R	56.49	Ft-lbf/lbm/R
Specific Gravity - SG	0.944	
Density at 70 F & 14.7 psia	0.0708	lbm/ft^3
Ratio of Specific Heats - k	1.3787	Cp/Cv
Critical Pressure Ratio - CPR	0.5142	
High Heating Value - HHV	120	BTU/SCF
Low Heating Value - LHV	114	BTU/SCF
Stoichometric Air:Fuel Ratio	0.932	by Volume
Stoichometric Air:Fuel Ratio	0.857	by Mass
Low Flammability Limit in Air	3.3%	LFL
High Flammability Limit in Air	23.6%	HFL
Auto Ignition Temperature	1,091	deg F

Technician Initials:	JTX
Report Date:	11/20/2013

SUNY RF The Research Foundation for The State University of New York

SUNY Cobleskill

Synthetic Gas Analysis Report

Sample No.:	SB111913-1415
Sample Date:	11/19/2013
Sample Description:	IIRPG,Cooksburg wood chips, 140 BTU on calorval
Analysis Date:	11/19/2013

Analysis by Gas Chromatograph

Component	Chemical Formula	Analysis % Volume	Analysis % mole	Analysis % Mass
Hydrogen	H2	8.2%	8.2%	0.6%
Oxygen	O2	1.6%	1.6%	1.9%
Nitrogen	N2	55.0%	55.0%	56.5%
Methane	CH4	2.2%	2.2%	1.3%
Carbon Monoxide	CO	22.6%	22.6%	23.2%
Carbon Dioxide	CO2	9.9%	9.9%	15.9%
Water	H2O	0.0%	0.0%	0.0%
Acetylene	C2H2	0.6%	0.6%	0.6%
Ethylene	C2H4	0.0%	0.0%	0.0%
Ethane	C2H6	0.0%	0.0%	0.0%
	Total =	100%	100%	100%

Stoichiometric Combustion Products:

CO2	0.400	lb per lb of combustible
H2O	0.082	lb per lb of combustible
N2	0.769	lb per lb of combustible

CO2	0.260	ft^3 per ft^3 of combustible
H2O	0.131	ft^3 per ft^3 of combustible
N2	0.800	ft^3 per ft^3 of combustible

Calculated Values:

Molecular Weight - MW	27.27	
Resultant Gas Constant - R	56.68	Ft-lbf/lbm/R
Specific Gravity - SG	0.941	
Density at 70 F & 14.7 psia	0.0706	lbm/ft^3
Ratio of Specific Heats - k	1.3794	Cp/Cv
Critical Pressure Ratio - CPR	0.5135	
High Heating Value - HHV	121	BTU/SCF
Low Heating Value - LHV	115	BTU/SCF
Stoichometric Air:Fuel Ratio	0.938	by Volume
Stoichometric Air:Fuel Ratio	0.862	by Mass
Low Flammability Limit in Air	3.3%	LFL
High Flammability Limit in Air	23.8%	HFL
Auto Ignition Temperature	1,087	deg F

Technician Initials:	JTX
Report Date:	11/20/2013

SUNY RF The Research Foundation for The State University of New York

SUNY Cobleskill

Synthetic Gas Analysis Report

Sample No.:	SB111913-1345
Sample Date:	11/19/2013
Sample Description:	IIRPG,Cooksburg wood chips, 128 BTU on calorval
Analysis Date:	11/19/2013

Analysis by Gas Chromatograph

Component	Chemical Formula	Analysis % Volume	Analysis % mole	Analysis % Mass
Hydrogen	H2	7.2%	7.2%	0.5%
Oxygen	O2	2.5%	2.5%	2.9%
Nitrogen	N2	57.4%	57.4%	57.9%
Methane	CH4	2.3%	2.3%	1.3%
Carbon Monoxide	CO	18.7%	18.7%	18.9%
Carbon Dioxide	CO2	11.3%	11.3%	17.8%
Water	H2O	0.0%	0.0%	0.0%
Acetylene	C2H2	0.6%	0.6%	0.6%
Ethylene	C2H4	0.0%	0.0%	0.0%
Ethane	C2H6	0.0%	0.0%	0.0%
	Total =	100%	100%	100%

Stoichiometric Combustion Products:

CO2	0.333	lb per lb of combustible
H2O	0.076	lb per lb of combustible
N2	0.672	lb per lb of combustible

CO2	0.223	ft^3 per ft^3 of combustible
H2O	0.124	ft^3 per ft^3 of combustible
N2	0.719	ft^3 per ft^3 of combustible

Calculated Values:

Molecular Weight - MW	27.77	
Resultant Gas Constant - R	55.65	Ft-lbf/lbm/R
Specific Gravity - SG	0.959	
Density at 70 F & 14.7 psia	0.0719	lbm/ft^3
Ratio of Specific Heats - k	1.3770	Cp/Cv
Critical Pressure Ratio - CPR	0.5179	
High Heating Value - HHV	107	BTU/SCF
Low Heating Value - LHV	101	BTU/SCF
Stoichometric Air:Fuel Ratio	0.835	by Volume
Stoichometric Air:Fuel Ratio	0.755	by Mass
Low Flammability Limit in Air	2.8%	LFL
High Flammability Limit in Air	20.2%	HFL
Auto Ignition Temperature	1,087	deg F

Technician Initials:	JTX
Report Date:	11/20/2013

SUNY RF The Research Foundation for The State University of New York

SUNY Cobleskill

Synthetic Gas Analysis Report

Sample No.:	SB102413-1310
Sample Date:	10/24/2013
Sample Description:	IIRPG, Campus Pine Chips, Shortly after blower overload, 99 BTU on Calorval
Analysis Date:	10/24/2013

Analysis by Gas Chromatograph

Component	Chemical Formula	Analysis % Volume	Analysis % mole	Analysis % Mass
Hydrogen	H2	3.6%	3.6%	0.3%
Oxygen	O2	1.2%	1.2%	1.3%
Nitrogen	N2	66.1%	66.1%	64.5%
Methane	CH4	1.5%	1.5%	0.8%
Carbon Monoxide	CO	15.6%	15.6%	15.2%
Carbon Dioxide	CO2	11.3%	11.3%	17.3%
Water	H2O	0.0%	0.0%	0.0%
Acetylene	C2H2	0.7%	0.7%	0.6%
Ethylene	C2H4	0.0%	0.0%	0.0%
Ethane	C2H6	0.0%	0.0%	0.0%
	Total =	100%	100%	100%

Stoichiometric Combustion Products:

CO2	0.262	lb per lb of combustible
H2O	0.041	lb per lb of combustible
N2	0.467	lb per lb of combustible

CO2	0.185	ft^3 per ft^3 of combustible
H2O	0.073	ft^3 per ft^3 of combustible
N2	0.541	ft^3 per ft^3 of combustible

Calculated Values:

Molecular Weight - MW	28.73	
Resultant Gas Constant - R	53.78	Ft-lbf/lbm/R
Specific Gravity - SG	0.992	
Density at 70 F & 14.7 psia	0.0744	lbm/ft^3
Ratio of Specific Heats - k	1.3780	Cp/Cv
Critical Pressure Ratio - CPR	0.5269	
High Heating Value - HHV	77	BTU/SCF
Low Heating Value - LHV	74	BTU/SCF
Stoichometric Air:Fuel Ratio	0.600	by Volume
Stoichometric Air:Fuel Ratio	0.549	by Mass
Low Flammability Limit in Air	2.2%	LFL
High Flammability Limit in Air	15.2%	HFL
Auto Ignition Temperature	1,110	deg F

Technician Initials:	JTX
Report Date:	10/24/2013

SUNY RF The Research Foundation for The State University of New York

SUNY Cobleskill

Synthetic Gas Analysis Report

Sample No.:	SB102413-1245
Sample Date:	10/24/2013
Sample Description:	IIRPG, Campus Pine Chips, 111 BTU on Calorval
Analysis Date:	10/24/2013

Analysis by Gas Chromatograph

Component	Chemical Formula	Analysis % Volume	Analysis % mole	Analysis % Mass
Hydrogen	H2	5.5%	5.5%	0.4%
Oxygen	O2	1.4%	1.4%	1.6%
Nitrogen	N2	60.5%	60.5%	60.5%
Methane	CH4	1.8%	1.8%	1.0%
Carbon Monoxide	CO	20.0%	20.0%	20.0%
Carbon Dioxide	CO2	10.0%	10.0%	15.7%
Water	H2O	0.0%	0.0%	0.0%
Acetylene	C2H2	0.8%	0.8%	0.8%
Ethylene	C2H4	0.0%	0.0%	0.0%
Ethane	C2H6	0.0%	0.0%	0.0%
	Total =	100%	100%	100%

Stoichiometric Combustion Products:

CO2	0.342	lb per lb of combustible
H2O	0.058	lb per lb of combustible
N2	0.619	lb per lb of combustible

CO2	0.234	ft^3 per ft^3 of combustible
H2O	0.098	ft^3 per ft^3 of combustible
N2	0.689	ft^3 per ft^3 of combustible

Calculated Values:

Molecular Weight - MW	28.02	
Resultant Gas Constant - R	55.16	Ft-lbf/lbm/R
Specific Gravity - SG	0.967	
Density at 70 F & 14.7 psia	0.0725	lbm/ft^3
Ratio of Specific Heats - k	1.3796	Cp/Cv
Critical Pressure Ratio - CPR	0.5205	
High Heating Value - HHV	100	BTU/SCF
Low Heating Value - LHV	96	BTU/SCF
Stoichometric Air:Fuel Ratio	0.776	by Volume
Stoichometric Air:Fuel Ratio	0.715	by Mass
Low Flammability Limit in Air	2.8%	LFL
High Flammability Limit in Air	20.0%	HFL
Auto Ignition Temperature	1,102	deg F

Technician Initials:	JTX
Report Date:	10/24/2013

SUNY RF The Research Foundation for The State University of New York

SUNY Cobleskill

Synthetic Gas Analysis Report

Sample No.:	SB102413-1210
Sample Date:	10/24/2013
Sample Description:	IIRPG, Campus Pine Chips, 103 BTU on Calorval
Analysis Date:	10/24/2013

Analysis by Gas Chromatograph

Component	Chemical Formula	Analysis % Volume	Analysis % mole	Analysis % Mass
Hydrogen	H2	4.6%	4.6%	0.3%
Oxygen	O2	1.7%	1.7%	1.9%
Nitrogen	N2	63.3%	63.3%	62.2%
Methane	CH4	1.4%	1.4%	0.8%
Carbon Monoxide	CO	17.9%	17.9%	17.7%
Carbon Dioxide	CO2	11.1%	11.1%	17.1%
Water	H2O	0.0%	0.0%	0.0%
Acetylene	C2H2	0.0%	0.0%	0.0%
Ethylene	C2H4	0.0%	0.0%	0.0%
Ethane	C2H6	0.0%	0.0%	0.0%
	Total =	100%	100%	100%

Stoichiometric Combustion Products:

CO2	0.298	lb per lb of combustible
H2O	0.047	lb per lb of combustible
N2	0.524	lb per lb of combustible

CO2	0.193	ft^3 per ft^3 of combustible
H2O	0.074	ft^3 per ft^3 of combustible
N2	0.528	ft^3 per ft^3 of combustible

Calculated Values:

Molecular Weight - MW	28.48	
Resultant Gas Constant - R	54.26	Ft-lbf/lbm/R
Specific Gravity - SG	0.983	
Density at 70 F & 14.7 psia	0.0737	lbm/ft^3
Ratio of Specific Heats - k	1.3789	Cp/Cv
Critical Pressure Ratio - CPR	0.5247	
High Heating Value - HHV	87	BTU/SCF
Low Heating Value - LHV	83	BTU/SCF
Stoichometric Air:Fuel Ratio	0.668	by Volume
Stoichometric Air:Fuel Ratio	0.607	by Mass
Low Flammability Limit in Air	2.5%	LFL
High Flammability Limit in Air	17.0%	HFL
Auto Ignition Temperature	1,087	deg F

Technician Initials:	JTX
Report Date:	10/24/2013

SUNY RF The Research Foundation for The State University of New York

SUNY Cobleskill

Synthetic Gas Analysis Report

Sample No.:	SB102413-1110
Sample Date:	10/24/2013
Sample Description:	IIRPG, Campus Pine Chips, 124 BTU on Calorval
Analysis Date:	10/24/2013

Analysis by Gas Chromatograph

Component	Chemical Formula	Analysis % Volume	Analysis % mole	Analysis % Mass
Hydrogen	H2	8.4%	8.4%	0.6%
Oxygen	O2	1.9%	1.9%	2.2%
Nitrogen	N2	57.4%	57.4%	58.5%
Methane	CH4	2.1%	2.1%	1.2%
Carbon Monoxide	CO	19.0%	19.0%	19.4%
Carbon Dioxide	CO2	11.3%	11.3%	18.1%
Water	H2O	0.0%	0.0%	0.0%
Acetylene	C2H2	0.0%	0.0%	0.0%
Ethylene	C2H4	0.0%	0.0%	0.0%
Ethane	C2H6	0.0%	0.0%	0.0%
	Total =	100%	100%	100%

Stoichiometric Combustion Products:

CO2	0.338	lb per lb of combustible
H2O	0.082	lb per lb of combustible
N2	0.693	lb per lb of combustible

CO2	0.211	ft^3 per ft^3 of combustible
H2O	0.126	ft^3 per ft^3 of combustible
N2	0.673	ft^3 per ft^3 of combustible

Calculated Values:

Molecular Weight - MW	27.47	
Resultant Gas Constant - R	56.26	Ft-lbf/lbm/R
Specific Gravity - SG	0.948	
Density at 70 F & 14.7 psia	0.0711	lbm/ft^3
Ratio of Specific Heats - k	1.3774	Cp/Cv
Critical Pressure Ratio - CPR	0.5151	
High Heating Value - HHV	110	BTU/SCF
Low Heating Value - LHV	103	BTU/SCF
Stoichometric Air:Fuel Ratio	0.852	by Volume
Stoichometric Air:Fuel Ratio	0.761	by Mass
Low Flammability Limit in Air	2.8%	LFL
High Flammability Limit in Air	20.6%	HFL
Auto Ignition Temperature	1,069	deg F

Technician Initials:	JTX
Report Date:	10/24/2013

SUNY RF The Research Foundation for The State University of New York

SUNY Cobleskill

Synthetic Gas Analysis Report

Sample No.:	SB102413-1055
Sample Date:	10/24/2013
Sample Description:	IIRPG, Campus Pine Chips, 105 BTU on calorval
Analysis Date:	10/24/2013

Analysis by Gas Chromatograph

Component	Chemical Formula	Analysis % Volume	Analysis % mole	Analysis % Mass
Hydrogen	H2	7.1%	7.1%	0.5%
Oxygen	O2	4.7%	4.7%	5.4%
Nitrogen	N2	60.9%	60.9%	61.4%
Methane	CH4	1.8%	1.8%	1.0%
Carbon Monoxide	CO	15.3%	15.3%	15.4%
Carbon Dioxide	CO2	10.3%	10.3%	16.3%
Water	H2O	0.0%	0.0%	0.0%
Acetylene	C2H2	0.0%	0.0%	0.0%
Ethylene	C2H4	0.0%	0.0%	0.0%
Ethane	C2H6	0.0%	0.0%	0.0%
	Total =	100%	100%	100%

Stoichiometric Combustion Products:

CO2	0.270	lb per lb of combustible
H2O	0.069	lb per lb of combustible
N2	0.566	lb per lb of combustible

CO2	0.171	ft^3 per ft^3 of combustible
H2O	0.107	ft^3 per ft^3 of combustible
N2	0.556	ft^3 per ft^3 of combustible

Calculated Values:

Molecular Weight - MW	27.78	
Resultant Gas Constant - R	55.64	Ft-lbf/lbm/R
Specific Gravity - SG	0.959	
Density at 70 F & 14.7 psia	0.0719	lbm/ft^3
Ratio of Specific Heats - k	1.3797	Cp/Cv
Critical Pressure Ratio - CPR	0.5183	
High Heating Value - HHV	90	BTU/SCF
Low Heating Value - LHV	85	BTU/SCF
Stoichometric Air:Fuel Ratio	0.704	by Volume
Stoichometric Air:Fuel Ratio	0.618	by Mass
Low Flammability Limit in Air	2.3%	LFL
High Flammability Limit in Air	16.9%	HFL
Auto Ignition Temperature	1,066	deg F

Technician Initials:	JTX
Report Date:	10/24/2013

SUNY RF The Research Foundation for The State University of New York

SUNY Cobleskill

Synthetic Gas Analysis Report

Sample No.:	SB102413-1030
Sample Date:	10/24/2013
Sample Description:	IIRPG, Campus Pine Chips, 102 BTU on Calorval
Analysis Date:	10/24/2013

Analysis by Gas Chromatograph

Component	Chemical Formula	Analysis % Volume	Analysis % mole	Analysis % Mass
Hydrogen	H2	6.7%	6.7%	0.5%
Oxygen	O2	4.4%	4.4%	5.0%
Nitrogen	N2	60.9%	60.9%	61.1%
Methane	CH4	1.8%	1.8%	1.0%
Carbon Monoxide	CO	15.8%	15.8%	15.9%
Carbon Dioxide	CO2	10.5%	10.5%	16.5%
Water	H2O	0.0%	0.0%	0.0%
Acetylene	C2H2	0.0%	0.0%	0.0%
Ethylene	C2H4	0.0%	0.0%	0.0%
Ethane	C2H6	0.0%	0.0%	0.0%
	Total =	100%	100%	100%

Stoichiometric Combustion Products:

CO2	0.277	lb per lb of combustible
H2O	0.066	lb per lb of combustible
N2	0.564	lb per lb of combustible

CO2	0.176	ft^3 per ft^3 of combustible
H2O	0.102	ft^3 per ft^3 of combustible
N2	0.557	ft^3 per ft^3 of combustible

Calculated Values:

Molecular Weight - MW	27.91	
Resultant Gas Constant - R	55.37	Ft-lbf/lbm/R
Specific Gravity - SG	0.963	
Density at 70 F & 14.7 psia	0.0722	lbm/ft^3
Ratio of Specific Heats - k	1.3794	Cp/Cv
Critical Pressure Ratio - CPR	0.5195	
High Heating Value - HHV	91	BTU/SCF
Low Heating Value - LHV	85	BTU/SCF
Stoichometric Air:Fuel Ratio	0.705	by Volume
Stoichometric Air:Fuel Ratio	0.624	by Mass
Low Flammability Limit in Air	2.3%	LFL
High Flammability Limit in Air	17.0%	HFL
Auto Ignition Temperature	1,070	deg F

Technician Initials:	JTX
Report Date:	10/24/2013

SUNY RF The Research Foundation for The State University of New York

SUNY Cobleskill

Synthetic Gas Analysis Report

Sample No.:	SB101613-1329
Sample Date:	10/15/2013
Sample Description:	IIRPG, Dry Wood Chips, Good Flare
Analysis Date:	10/15/2013

Analysis by Gas Chromatograph

Component	Chemical Formula	Analysis % Volume	Analysis % mole	Analysis % Mass
Hydrogen	H2	3.1%	3.1%	0.2%
Oxygen	O2	5.2%	5.2%	6.0%
Nitrogen	N2	85.9%	85.9%	86.0%
Methane	CH4	0.0%	0.0%	0.0%
Carbon Monoxide	CO	2.2%	2.2%	2.2%
Carbon Dioxide	CO2	3.6%	3.6%	5.6%
Water	H2O	0.0%	0.0%	0.0%
Acetylene	C2H2	0.0%	0.0%	0.0%
Ethylene	C2H4	0.0%	0.0%	0.0%
Ethane	C2H6	0.0%	0.0%	0.0%
	Total =	100%	100%	100%

Stoichiometric Combustion Products:

CO2	0.034	lb per lb of combustible
H2O	0.020	lb per lb of combustible
N2	0.101	lb per lb of combustible

CO2	0.022	ft^3 per ft^3 of combustible
H2O	0.031	ft^3 per ft^3 of combustible
N2	0.100	ft^3 per ft^3 of combustible

Calculated Values:

Molecular Weight - MW	27.99	
Resultant Gas Constant - R	55.21	Ft-lbf/lbm/R
Specific Gravity - SG	0.966	
Density at 70 F & 14.7 psia	0.0724	lbm/ft^3
Ratio of Specific Heats - k	1.3933	Cp/Cv
Critical Pressure Ratio - CPR	0.5220	
High Heating Value - HHV	17	BTU/SCF
Low Heating Value - LHV	16	BTU/SCF
Stoichometric Air:Fuel Ratio	0.126	by Volume
Stoichometric Air:Fuel Ratio	0.080	by Mass
Low Flammability Limit in Air	0.4%	LFL
High Flammability Limit in Air	4.0%	HFL
Auto Ignition Temperature	1,013	deg F

Technician Initials:	JTX
Report Date:	10/15/2013

SUNY RF The Research Foundation for The State University of New York

SUNY Cobleskill

Synthetic Gas Analysis Report

Sample No.:	SB092513-1418
Sample Date:	9/25/2013
Sample Description:	IIRPG, Cafeteria Waste, 125 BTU on Calorval
Analysis Date:	9/25/2013

Analysis by Gas Chromatograph

Component	Chemical Formula	Analysis % Volume	Analysis % mole	Analysis % Mass
Hydrogen	H2	5.9%	5.9%	0.4%
Oxygen	O2	1.4%	1.4%	1.6%
Nitrogen	N2	64.7%	64.7%	63.6%
Methane	CH4	1.6%	1.6%	0.9%
Carbon Monoxide	CO	12.7%	12.7%	12.5%
Carbon Dioxide	CO2	13.6%	13.6%	21.0%
Water	H2O	0.0%	0.0%	0.0%
Acetylene	C2H2	0.0%	0.0%	0.0%
Ethylene	C2H4	0.0%	0.0%	0.0%
Ethane	C2H6	0.0%	0.0%	0.0%
	Total =	100%	100%	100%

Stoichiometric Combustion Products:

CO2	0.221	lb per lb of combustible
H2O	0.057	lb per lb of combustible
N2	0.466	lb per lb of combustible

CO2	0.143	ft^3 per ft^3 of combustible
H2O	0.091	ft^3 per ft^3 of combustible
N2	0.470	ft^3 per ft^3 of combustible

Calculated Values:

Molecular Weight - MW	28.52	
Resultant Gas Constant - R	54.19	Ft-lbf/lbm/R
Specific Gravity - SG	0.984	
Density at 70 F & 14.7 psia	0.0738	lbm/ft^3
Ratio of Specific Heats - k	1.3742	Cp/Cv
Critical Pressure Ratio - CPR	0.5244	
High Heating Value - HHV	76	BTU/SCF
Low Heating Value - LHV	72	BTU/SCF
Stoichometric Air:Fuel Ratio	0.595	by Volume
Stoichometric Air:Fuel Ratio	0.511	by Mass
Low Flammability Limit in Air	1.9%	LFL
High Flammability Limit in Air	14.1%	HFL
Auto Ignition Temperature	1,067	deg F

Technician Initials:	JTX
Report Date:	9/26/2013

SUNY RF The Research Foundation for The State University of New York

SUNY Cobleskill

Synthetic Gas Analysis Report

Sample No.:	SB092513-1407
Sample Date:	9/25/2013
Sample Description:	IIRPG, Cafeteria Waste, 124 BTU on Calorval
Analysis Date:	9/25/2013

Analysis by Gas Chromatograph

Component	Chemical Formula	Analysis % Volume	Analysis % mole	Analysis % Mass
Hydrogen	H2	4.7%	4.7%	0.3%
Oxygen	O2	2.3%	2.3%	2.6%
Nitrogen	N2	65.4%	65.4%	63.6%
Methane	CH4	1.7%	1.7%	1.0%
Carbon Monoxide	CO	12.5%	12.5%	12.1%
Carbon Dioxide	CO2	13.4%	13.4%	20.4%
Water	H2O	0.0%	0.0%	0.0%
Acetylene	C2H2	0.0%	0.0%	0.0%
Ethylene	C2H4	0.0%	0.0%	0.0%
Ethane	C2H6	0.0%	0.0%	0.0%
	Total =	100%	100%	100%

Stoichiometric Combustion Products:

CO2	0.217	lb per lb of combustible
H2O	0.051	lb per lb of combustible
N2	0.444	lb per lb of combustible

CO2	0.142	ft^3 per ft^3 of combustible
H2O	0.081	ft^3 per ft^3 of combustible
N2	0.452	ft^3 per ft^3 of combustible

Calculated Values:

Molecular Weight - MW	28.82	
Resultant Gas Constant - R	53.63	Ft-lbf/lbm/R
Specific Gravity - SG	0.995	
Density at 70 F & 14.7 psia	0.0746	lbm/ft^3
Ratio of Specific Heats - k	1.3748	Cp/Cv
Critical Pressure Ratio - CPR	0.5272	
High Heating Value - HHV	73	BTU/SCF
Low Heating Value - LHV	69	BTU/SCF
Stoichometric Air:Fuel Ratio	0.572	by Volume
Stoichometric Air:Fuel Ratio	0.502	by Mass
Low Flammability Limit in Air	1.8%	LFL
High Flammability Limit in Air	13.0%	HFL
Auto Ignition Temperature	1,074	deg F

Technician Initials:	JTX
Report Date:	9/26/2013

SUNY RF The Research Foundation for The State University of New York

SUNY Cobleskill

Synthetic Gas Analysis Report

Sample No.:	SB092513-1403
Sample Date:	9/25/2013
Sample Description:	IIRPG, Cafeteria Waste, 110 BTU on Calorval
Analysis Date:	9/25/2013

Analysis by Gas Chromatograph

Component	Chemical Formula	Analysis % Volume	Analysis % mole	Analysis % Mass
Hydrogen	H2	4.7%	4.7%	0.3%
Oxygen	O2	2.4%	2.4%	2.8%
Nitrogen	N2	62.3%	62.3%	61.4%
Methane	CH4	1.2%	1.2%	0.7%
Carbon Monoxide	CO	19.1%	19.1%	18.8%
Carbon Dioxide	CO2	10.3%	10.3%	16.0%
Water	H2O	0.0%	0.0%	0.0%
Acetylene	C2H2	0.0%	0.0%	0.0%
Ethylene	C2H4	0.0%	0.0%	0.0%
Ethane	C2H6	0.0%	0.0%	0.0%
	Total =	100%	100%	100%

Stoichiometric Combustion Products:

CO2	0.314	lb per lb of combustible
H2O	0.045	lb per lb of combustible
N2	0.533	lb per lb of combustible

CO2	0.202	ft^3 per ft^3 of combustible
H2O	0.070	ft^3 per ft^3 of combustible
N2	0.535	ft^3 per ft^3 of combustible

Calculated Values:

Molecular Weight - MW	28.39	
Resultant Gas Constant - R	54.44	Ft-lbf/lbm/R
Specific Gravity - SG	0.980	
Density at 70 F & 14.7 psia	0.0735	lbm/ft^3
Ratio of Specific Heats - k	1.3803	Cp/Cv
Critical Pressure Ratio - CPR	0.5241	
High Heating Value - HHV	89	BTU/SCF
Low Heating Value - LHV	85	BTU/SCF
Stoichometric Air:Fuel Ratio	0.678	by Volume
Stoichometric Air:Fuel Ratio	0.617	by Mass
Low Flammability Limit in Air	2.6%	LFL
High Flammability Limit in Air	17.9%	HFL
Auto Ignition Temperature	1,088	deg F

Technician Initials:	JTX
Report Date:	9/26/2013

SUNY RF The Research Foundation for The State University of New York

SUNY Cobleskill

Synthetic Gas Analysis Report

Sample No.:	SB083013-1325
Sample Date:	8/30/2013
Sample Description:	Wood Pellets, IIRPG
Analysis Date:	8/30/2013

Analysis by Gas Chromatograph

Component	Chemical Formula	Analysis % Volume	Analysis % mole	Analysis % Mass
Hydrogen	H2	8.6%	8.6%	0.6%
Oxygen	O2	2.1%	2.1%	2.5%
Nitrogen	N2	55.2%	55.2%	57.8%
Methane	CH4	2.1%	2.1%	1.2%
Carbon Monoxide	CO	25.0%	25.0%	26.2%
Carbon Dioxide	CO2	7.1%	7.1%	11.7%
Water	H2O	0.0%	0.0%	0.0%
Acetylene	C2H2	0.0%	0.0%	0.0%
Ethylene	C2H4	0.0%	0.0%	0.0%
Ethane	C2H6	0.0%	0.0%	0.0%
	Total =	100%	100%	100%

Stoichiometric Combustion Products:

CO2	0.445	lb per lb of combustible
H2O	0.086	lb per lb of combustible
N2	0.833	lb per lb of combustible

CO2	0.271	ft^3 per ft^3 of combustible
H2O	0.127	ft^3 per ft^3 of combustible
N2	0.788	ft^3 per ft^3 of combustible

Calculated Values:

Molecular Weight - MW	26.76	
Resultant Gas Constant - R	57.75	Ft-lbf/lbm/R
Specific Gravity - SG	0.924	
Density at 70 F & 14.7 psia	0.0693	lbm/ft^3
Ratio of Specific Heats - k	1.3850	Cp/Cv
Critical Pressure Ratio - CPR	0.5094	
High Heating Value - HHV	129	BTU/SCF
Low Heating Value - LHV	123	BTU/SCF
Stoichometric Air:Fuel Ratio	0.997	by Volume
Stoichometric Air:Fuel Ratio	0.936	by Mass
Low Flammability Limit in Air	3.6%	LFL
High Flammability Limit in Air	25.2%	HFL
Auto Ignition Temperature	1,078	deg F

Technician Initials:	JTX
Report Date:	8/30/2013

SUNY RF The Research Foundation for The State University of New York

SUNY Cobleskill

Synthetic Gas Analysis Report

Sample No.:	SB083013-1318
Sample Date:	8/30/2013
Sample Description:	Wood Pellets, IIRPG
Analysis Date:	8/30/2013

Analysis by Gas Chromatograph

Component	Chemical Formula	Analysis % Volume	Analysis % mole	Analysis % Mass
Hydrogen	H2	9.2%	9.2%	0.7%
Oxygen	O2	1.2%	1.2%	1.5%
Nitrogen	N2	53.5%	53.5%	56.1%
Methane	CH4	2.3%	2.3%	1.4%
Carbon Monoxide	CO	25.4%	25.4%	26.7%
Carbon Dioxide	CO2	8.3%	8.3%	13.7%
Water	H2O	0.0%	0.0%	0.0%
Acetylene	C2H2	0.0%	0.0%	0.0%
Ethylene	C2H4	0.0%	0.0%	0.0%
Ethane	C2H6	0.0%	0.0%	0.0%
	Total =	100%	100%	100%

Stoichiometric Combustion Products:

CO2	0.457	lb per lb of combustible
H2O	0.093	lb per lb of combustible
N2	0.876	lb per lb of combustible

CO2	0.278	ft^3 per ft^3 of combustible
H2O	0.139	ft^3 per ft^3 of combustible
N2	0.827	ft^3 per ft^3 of combustible

Calculated Values:

Molecular Weight - MW	26.72	
Resultant Gas Constant - R	57.84	Ft-lbf/lbm/R
Specific Gravity - SG	0.922	
Density at 70 F & 14.7 psia	0.0692	lbm/ft^3
Ratio of Specific Heats - k	1.3826	Cp/Cv
Critical Pressure Ratio - CPR	0.5087	
High Heating Value - HHV	135	BTU/SCF
Low Heating Value - LHV	128	BTU/SCF
Stoichometric Air:Fuel Ratio	1.047	by Volume
Stoichometric Air:Fuel Ratio	0.980	by Mass
Low Flammability Limit in Air	3.7%	LFL
High Flammability Limit in Air	26.1%	HFL
Auto Ignition Temperature	1,076	deg F

Technician Initials:	JTX
Report Date:	8/30/2013

SUNY RF The Research Foundation for The State University of New York

SUNY Cobleskill

Synthetic Gas Analysis Report

Sample No.:	SB083013-1307
Sample Date:	8/30/2013
Sample Description:	Wood Pellets, IIRPG
Analysis Date:	8/30/2013

Analysis by Gas Chromatograph

Component	Chemical Formula	Analysis % Volume	Analysis % mole	Analysis % Mass
Hydrogen	H2	7.9%	7.9%	0.6%
Oxygen	O2	1.3%	1.3%	1.5%
Nitrogen	N2	51.6%	51.6%	52.2%
Methane	CH4	2.7%	2.7%	1.6%
Carbon Monoxide	CO	24.2%	24.2%	24.5%
Carbon Dioxide	CO2	12.4%	12.4%	19.7%
Water	H2O	0.0%	0.0%	0.0%
Acetylene	C2H2	0.0%	0.0%	0.0%
Ethylene	C2H4	0.0%	0.0%	0.0%
Ethane	C2H6	0.0%	0.0%	0.0%
	Total =	100%	100%	100%

Stoichiometric Combustion Products:

CO2	0.428	lb per lb of combustible
H2O	0.086	lb per lb of combustible
N2	0.824	lb per lb of combustible

CO2	0.269	ft^3 per ft^3 of combustible
H2O	0.133	ft^3 per ft^3 of combustible
N2	0.806	ft^3 per ft^3 of combustible

Calculated Values:

Molecular Weight - MW	27.67	
Resultant Gas Constant - R	55.86	Ft-lbf/lbm/R
Specific Gravity - SG	0.955	
Density at 70 F & 14.7 psia	0.0716	lbm/ft^3
Ratio of Specific Heats - k	1.3752	Cp/Cv
Critical Pressure Ratio - CPR	0.5167	
High Heating Value - HHV	131	BTU/SCF
Low Heating Value - LHV	124	BTU/SCF
Stoichometric Air:Fuel Ratio	1.020	by Volume
Stoichometric Air:Fuel Ratio	0.940	by Mass
Low Flammability Limit in Air	3.5%	LFL
High Flammability Limit in Air	24.2%	HFL
Auto Ignition Temperature	1,079	deg F

Technician Initials:	JTX
Report Date:	8/30/2013

SUNY RF The Research Foundation for The State University of New York

SUNY Cobleskill

Synthetic Gas Analysis Report

Sample No.:	SB083013-1301
Sample Date:	8/30/2013
Sample Description:	Wood Pellets, IIRPG
Analysis Date:	8/30/2013

Analysis by Gas Chromatograph

Component	Chemical Formula	Analysis % Volume	Analysis % mole	Analysis % Mass
Hydrogen	H2	8.9%	8.9%	0.7%
Oxygen	O2	1.3%	1.3%	1.5%
Nitrogen	N2	52.7%	52.7%	53.6%
Methane	CH4	2.8%	2.8%	1.6%
Carbon Monoxide	CO	21.0%	21.0%	21.3%
Carbon Dioxide	CO2	13.3%	13.3%	21.3%
Water	H2O	0.0%	0.0%	0.0%
Acetylene	C2H2	0.0%	0.0%	0.0%
Ethylene	C2H4	0.0%	0.0%	0.0%
Ethane	C2H6	0.0%	0.0%	0.0%
	Total =	100%	100%	100%

Stoichiometric Combustion Products:

CO2	0.380	lb per lb of combustible
H2O	0.095	lb per lb of combustible
N2	0.793	lb per lb of combustible

CO2	0.238	ft^3 per ft^3 of combustible
H2O	0.145	ft^3 per ft^3 of combustible
N2	0.773	ft^3 per ft^3 of combustible

Calculated Values:

Molecular Weight - MW	27.55	
Resultant Gas Constant - R	56.09	Ft-lbf/lbm/R
Specific Gravity - SG	0.951	
Density at 70 F & 14.7 psia	0.0713	lbm/ft^3
Ratio of Specific Heats - k	1.3732	Cp/Cv
Critical Pressure Ratio - CPR	0.5153	
High Heating Value - HHV	125	BTU/SCF
Low Heating Value - LHV	118	BTU/SCF
Stoichometric Air:Fuel Ratio	0.978	by Volume
Stoichometric Air:Fuel Ratio	0.883	by Mass
Low Flammability Limit in Air	3.1%	LFL
High Flammability Limit in Air	22.6%	HFL
Auto Ignition Temperature	1,070	deg F

Technician Initials:	JTX
Report Date:	8/30/2013

SUNY RF The Research Foundation for The State University of New York

SUNY Cobleskill

Synthetic Gas Analysis Report

Sample No.:	SB082913-1328
Sample Date:	8/29/2013
Sample Description:	Wood Pellets, IIRPG
Analysis Date:	8/29/2013

Analysis by Gas Chromatograph

Component	Chemical Formula	Analysis % Volume	Analysis % mole	Analysis % Mass
Hydrogen	H2	5.3%	5.3%	0.4%
Oxygen	O2	1.3%	1.3%	1.5%
Nitrogen	N2	62.7%	62.7%	62.7%
Methane	CH4	1.4%	1.4%	0.8%
Carbon Monoxide	CO	20.1%	20.1%	20.1%
Carbon Dioxide	CO2	9.3%	9.3%	14.6%
Water	H2O	0.0%	0.0%	0.0%
Acetylene	C2H2	0.0%	0.0%	0.0%
Ethylene	C2H4	0.0%	0.0%	0.0%
Ethane	C2H6	0.0%	0.0%	0.0%
	Total =	100%	100%	100%

Stoichiometric Combustion Products:

CO2	0.338	lb per lb of combustible
H2O	0.051	lb per lb of combustible
N2	0.587	lb per lb of combustible

CO2	0.215	ft^3 per ft^3 of combustible
H2O	0.080	ft^3 per ft^3 of combustible
N2	0.581	ft^3 per ft^3 of combustible

Calculated Values:

Molecular Weight - MW	28.02	
Resultant Gas Constant - R	55.16	Ft-lbf/lbm/R
Specific Gravity - SG	0.967	
Density at 70 F & 14.7 psia	0.0725	lbm/ft^3
Ratio of Specific Heats - k	1.3819	Cp/Cv
Critical Pressure Ratio - CPR	0.5208	
High Heating Value - HHV	96	BTU/SCF
Low Heating Value - LHV	92	BTU/SCF
Stoichometric Air:Fuel Ratio	0.736	by Volume
Stoichometric Air:Fuel Ratio	0.677	by Mass
Low Flammability Limit in Air	2.8%	LFL
High Flammability Limit in Air	19.1%	HFL
Auto Ignition Temperature	1,087	deg F

Technician Initials:	JTX
Report Date:	8/29/2013

SUNY RF The Research Foundation for The State University of New York

SUNY Cobleskill

Synthetic Gas Analysis Report

Sample No.:	SB082913-1322
Sample Date:	8/29/2013
Sample Description:	Wood Pellets, IIRPG
Analysis Date:	8/29/2013

Analysis by Gas Chromatograph

Component	Chemical Formula	Analysis % Volume	Analysis % mole	Analysis % Mass
Hydrogen	H2	7.7%	7.7%	0.6%
Oxygen	O2	1.2%	1.2%	1.4%
Nitrogen	N2	57.1%	57.1%	59.0%
Methane	CH4	2.5%	2.5%	1.5%
Carbon Monoxide	CO	22.9%	22.9%	23.7%
Carbon Dioxide	CO2	8.6%	8.6%	13.9%
Water	H2O	0.0%	0.0%	0.0%
Acetylene	C2H2	0.0%	0.0%	0.0%
Ethylene	C2H4	0.0%	0.0%	0.0%
Ethane	C2H6	0.0%	0.0%	0.0%
	Total =	100%	100%	100%

Stoichiometric Combustion Products:

CO2	0.412	lb per lb of combustible
H2O	0.084	lb per lb of combustible
N2	0.797	lb per lb of combustible

CO2	0.254	ft^3 per ft^3 of combustible
H2O	0.127	ft^3 per ft^3 of combustible
N2	0.764	ft^3 per ft^3 of combustible

Calculated Values:

Molecular Weight - MW	27.13	
Resultant Gas Constant - R	56.96	Ft-lbf/lbm/R
Specific Gravity - SG	0.936	
Density at 70 F & 14.7 psia	0.0702	lbm/ft^3
Ratio of Specific Heats - k	1.3822	Cp/Cv
Critical Pressure Ratio - CPR	0.5125	
High Heating Value - HHV	124	BTU/SCF
Low Heating Value - LHV	118	BTU/SCF
Stoichometric Air:Fuel Ratio	0.967	by Volume
Stoichometric Air:Fuel Ratio	0.906	by Mass
Low Flammability Limit in Air	3.3%	LFL
High Flammability Limit in Air	23.1%	HFL
Auto Ignition Temperature	1,079	deg F

Technician Initials:	JTX
Report Date:	8/29/2013

SUNY RF The Research Foundation for The State University of New York

SUNY Cobleskill

Synthetic Gas Analysis Report

Sample No.:	SB082913-1310
Sample Date:	8/29/2013
Sample Description:	Wood Pellets, IIRPG
Analysis Date:	8/29/2013

Analysis by Gas Chromatograph

Component	Chemical Formula	Analysis % Volume	Analysis % mole	Analysis % Mass
Hydrogen	H2	8.0%	8.0%	0.6%
Oxygen	O2	1.1%	1.1%	1.3%
Nitrogen	N2	54.7%	54.7%	56.8%
Methane	CH4	1.9%	1.9%	1.2%
Carbon Monoxide	CO	26.6%	26.6%	27.6%
Carbon Dioxide	CO2	7.7%	7.7%	12.6%
Water	H2O	0.0%	0.0%	0.0%
Acetylene	C2H2	0.0%	0.0%	0.0%
Ethylene	C2H4	0.0%	0.0%	0.0%
Ethane	C2H6	0.0%	0.0%	0.0%
	Total =	100%	100%	100%

Stoichiometric Combustion Products:

CO2	0.465	lb per lb of combustible
H2O	0.079	lb per lb of combustible
N2	0.835	lb per lb of combustible

CO2	0.285	ft^3 per ft^3 of combustible
H2O	0.119	ft^3 per ft^3 of combustible
N2	0.797	ft^3 per ft^3 of combustible

Calculated Values:

Molecular Weight - MW	26.98	
Resultant Gas Constant - R	57.27	Ft-lbf/lbm/R
Specific Gravity - SG	0.931	
Density at 70 F & 14.7 psia	0.0698	lbm/ft^3
Ratio of Specific Heats - k	1.3840	Cp/Cv
Critical Pressure Ratio - CPR	0.5114	
High Heating Value - HHV	131	BTU/SCF
Low Heating Value - LHV	125	BTU/SCF
Stoichometric Air:Fuel Ratio	1.009	by Volume
Stoichometric Air:Fuel Ratio	0.950	by Mass
Low Flammability Limit in Air	3.7%	LFL
High Flammability Limit in Air	25.9%	HFL
Auto Ignition Temperature	1,082	deg F

Technician Initials:	JTX
Report Date:	8/29/2013

SUNY RF The Research Foundation for The State University of New York

SUNY Cobleskill

Synthetic Gas Analysis Report

Sample No.:	SB082913-1304
Sample Date:	8/29/2013
Sample Description:	Wood Pellets, IIRPG
Analysis Date:	8/29/2013

Analysis by Gas Chromatograph

Component	Chemical Formula	Analysis % Volume	Analysis % mole	Analysis % Mass
Hydrogen	H2	7.8%	7.8%	0.6%
Oxygen	O2	1.1%	1.1%	1.3%
Nitrogen	N2	55.2%	55.2%	57.1%
Methane	CH4	1.8%	1.8%	1.0%
Carbon Monoxide	CO	26.4%	26.4%	27.3%
Carbon Dioxide	CO2	7.8%	7.8%	12.6%
Water	H2O	0.0%	0.0%	0.0%
Acetylene	C2H2	0.0%	0.0%	0.0%
Ethylene	C2H4	0.0%	0.0%	0.0%
Ethane	C2H6	0.0%	0.0%	0.0%
	Total =	100%	100%	100%

Stoichiometric Combustion Products:

CO2	0.458	lb per lb of combustible
H2O	0.075	lb per lb of combustible
N2	0.810	lb per lb of combustible

CO2	0.282	ft^3 per ft^3 of combustible
H2O	0.113	ft^3 per ft^3 of combustible
N2	0.776	ft^3 per ft^3 of combustible

Calculated Values:

Molecular Weight - MW	27.07	
Resultant Gas Constant - R	57.08	Ft-lbf/lbm/R
Specific Gravity - SG	0.935	
Density at 70 F & 14.7 psia	0.0701	lbm/ft^3
Ratio of Specific Heats - k	1.3840	Cp/Cv
Critical Pressure Ratio - CPR	0.5122	
High Heating Value - HHV	128	BTU/SCF
Low Heating Value - LHV	122	BTU/SCF
Stoichometric Air:Fuel Ratio	0.982	by Volume
Stoichometric Air:Fuel Ratio	0.922	by Mass
Low Flammability Limit in Air	3.7%	LFL
High Flammability Limit in Air	25.6%	HFL
Auto Ignition Temperature	1,083	deg F

Technician Initials:	JTX
Report Date:	8/29/2013

SUNY RF The Research Foundation for The State University of New York

SUNY Cobleskill

Synthetic Gas Analysis Report

Sample No.:	SB082913-1258
Sample Date:	8/29/2013
Sample Description:	Wood Pellets, IIRPG
Analysis Date:	8/29/2013

Analysis by Gas Chromatograph

Component	Chemical Formula	Analysis % Volume	Analysis % mole	Analysis % Mass
Hydrogen	H2	8.2%	8.2%	0.6%
Oxygen	O2	1.0%	1.0%	1.2%
Nitrogen	N2	54.6%	54.6%	56.6%
Methane	CH4	2.0%	2.0%	1.2%
Carbon Monoxide	CO	25.6%	25.6%	26.6%
Carbon Dioxide	CO2	8.5%	8.5%	13.8%
Water	H2O	0.0%	0.0%	0.0%
Acetylene	C2H2	0.0%	0.0%	0.0%
Ethylene	C2H4	0.0%	0.0%	0.0%
Ethane	C2H6	0.0%	0.0%	0.0%
	Total =	100%	100%	100%

Stoichiometric Combustion Products:

CO2	0.451	lb per lb of combustible
H2O	0.082	lb per lb of combustible
N2	0.828	lb per lb of combustible

CO2	0.277	ft^3 per ft^3 of combustible
H2O	0.123	ft^3 per ft^3 of combustible
N2	0.791	ft^3 per ft^3 of combustible

Calculated Values:

Molecular Weight - MW	27.02	
Resultant Gas Constant - R	57.19	Ft-lbf/lbm/R
Specific Gravity - SG	0.933	
Density at 70 F & 14.7 psia	0.0699	lbm/ft^3
Ratio of Specific Heats - k	1.3825	Cp/Cv
Critical Pressure Ratio - CPR	0.5116	
High Heating Value - HHV	130	BTU/SCF
Low Heating Value - LHV	124	BTU/SCF
Stoichometric Air:Fuel Ratio	1.001	by Volume
Stoichometric Air:Fuel Ratio	0.937	by Mass
Low Flammability Limit in Air	3.6%	LFL
High Flammability Limit in Air	25.5%	HFL
Auto Ignition Temperature	1,080	deg F

Technician Initials:	JTX
Report Date:	8/29/2013

SUNY RF The Research Foundation for The State University of New York

SUNY Cobleskill

Synthetic Gas Analysis Report

Sample No.:	SB082913-1253
Sample Date:	8/29/2013
Sample Description:	Wood Pellets, IIRPG
Analysis Date:	8/29/2013

Analysis by Gas Chromatograph

Component	Chemical Formula	Analysis % Volume	Analysis % mole	Analysis % Mass
Hydrogen	H2	8.3%	8.3%	0.6%
Oxygen	O2	1.0%	1.0%	1.2%
Nitrogen	N2	54.0%	54.0%	55.6%
Methane	CH4	2.3%	2.3%	1.3%
Carbon Monoxide	CO	24.6%	24.6%	25.3%
Carbon Dioxide	CO2	9.9%	9.9%	15.9%
Water	H2O	0.0%	0.0%	0.0%
Acetylene	C2H2	0.0%	0.0%	0.0%
Ethylene	C2H4	0.0%	0.0%	0.0%
Ethane	C2H6	0.0%	0.0%	0.0%
	Total =	100%	100%	100%

Stoichiometric Combustion Products:

CO2	0.434	lb per lb of combustible
H2O	0.085	lb per lb of combustible
N2	0.819	lb per lb of combustible

CO2	0.268	ft^3 per ft^3 of combustible
H2O	0.128	ft^3 per ft^3 of combustible
N2	0.788	ft^3 per ft^3 of combustible

Calculated Values:

Molecular Weight - MW	27.21	
Resultant Gas Constant - R	56.80	Ft-lbf/lbm/R
Specific Gravity - SG	0.939	
Density at 70 F & 14.7 psia	0.0704	lbm/ft^3
Ratio of Specific Heats - k	1.3799	Cp/Cv
Critical Pressure Ratio - CPR	0.5130	
High Heating Value - HHV	129	BTU/SCF
Low Heating Value - LHV	122	BTU/SCF
Stoichometric Air:Fuel Ratio	0.998	by Volume
Stoichometric Air:Fuel Ratio	0.926	by Mass
Low Flammability Limit in Air	3.5%	LFL
High Flammability Limit in Air	24.7%	HFL
Auto Ignition Temperature	1,078	deg F

Technician Initials:	JTX
Report Date:	8/29/2013

SUNY RF The Research Foundation for The State University of New York

SUNY Cobleskill

Synthetic Gas Analysis Report

Sample No.:	SB082913-1248
Sample Date:	8/29/2013
Sample Description:	Wood Pellets, IIRPG
Analysis Date:	8/29/2013

Analysis by Gas Chromatograph

Component	Chemical Formula	Analysis % Volume	Analysis % mole	Analysis % Mass
Hydrogen	H2	8.4%	8.4%	0.6%
Oxygen	O2	1.0%	1.0%	1.1%
Nitrogen	N2	53.1%	53.1%	54.2%
Methane	CH4	2.5%	2.5%	1.5%
Carbon Monoxide	CO	23.1%	23.1%	23.6%
Carbon Dioxide	CO2	11.8%	11.8%	19.0%
Water	H2O	0.0%	0.0%	0.0%
Acetylene	C2H2	0.0%	0.0%	0.0%
Ethylene	C2H4	0.0%	0.0%	0.0%
Ethane	C2H6	0.0%	0.0%	0.0%
	Total =	100%	100%	100%

Stoichiometric Combustion Products:

CO2	0.411	lb per lb of combustible
H2O	0.088	lb per lb of combustible
N2	0.807	lb per lb of combustible

CO2	0.257	ft^3 per ft^3 of combustible
H2O	0.134	ft^3 per ft^3 of combustible
N2	0.784	ft^3 per ft^3 of combustible

Calculated Values:

Molecular Weight - MW	27.47	
Resultant Gas Constant - R	56.25	Ft-lbf/lbm/R
Specific Gravity - SG	0.948	
Density at 70 F & 14.7 psia	0.0711	lbm/ft^3
Ratio of Specific Heats - k	1.3761	Cp/Cv
Critical Pressure Ratio - CPR	0.5150	
High Heating Value - HHV	127	BTU/SCF
Low Heating Value - LHV	121	BTU/SCF
Stoichometric Air:Fuel Ratio	0.992	by Volume
Stoichometric Air:Fuel Ratio	0.910	by Mass
Low Flammability Limit in Air	3.4%	LFL
High Flammability Limit in Air	23.8%	HFL
Auto Ignition Temperature	1,076	deg F

Technician Initials:	JTX
Report Date:	8/29/2013

SUNY RF The Research Foundation for The State University of New York

SUNY Cobleskill

Synthetic Gas Analysis Report

Sample No.:	SB082913-1243
Sample Date:	8/29/2013
Sample Description:	Wood Pellets, IIRPG
Analysis Date:	8/29/2013

Analysis by Gas Chromatograph

Component	Chemical Formula	Analysis % Volume	Analysis % mole	Analysis % Mass
Hydrogen	H2	8.8%	8.8%	0.7%
Oxygen	O2	1.3%	1.3%	1.7%
Nitrogen	N2	50.9%	50.9%	59.6%
Methane	CH4	3.3%	3.3%	2.2%
Carbon Monoxide	CO	21.3%	21.3%	25.0%
Carbon Dioxide	CO2	0.0%	0.0%	0.0%
Water	H2O	14.3%	14.3%	10.8%
Acetylene	C2H2	0.0%	0.0%	0.0%
Ethylene	C2H4	0.0%	0.0%	0.0%
Ethane	C2H6	0.0%	0.0%	0.0%
	Total =	100%	100%	100%

Stoichiometric Combustion Products:

CO2	0.453	lb per lb of combustible
H2O	0.116	lb per lb of combustible
N2	0.965	lb per lb of combustible

CO2	0.247	ft^3 per ft^3 of combustible
H2O	0.154	ft^3 per ft^3 of combustible
N2	0.818	ft^3 per ft^3 of combustible

Calculated Values:

Molecular Weight - MW	23.95	
Resultant Gas Constant - R	64.53	Ft-lbf/lbm/R
Specific Gravity - SG	0.827	
Density at 70 F & 14.7 psia	0.0620	lbm/ft^3
Ratio of Specific Heats - k	1.3907	Cp/Cv
Critical Pressure Ratio - CPR	0.4826	
High Heating Value - HHV	131	BTU/SCF
Low Heating Value - LHV	123	BTU/SCF
Stoichometric Air:Fuel Ratio	1.035	by Volume
Stoichometric Air:Fuel Ratio	1.087	by Mass
Low Flammability Limit in Air	3.2%	LFL
High Flammability Limit in Air	22.9%	HFL
Auto Ignition Temperature	1,071	deg F

Technician Initials:	JTX
Report Date:	8/29/2013

SUNY RF The Research Foundation for The State University of New York

SUNY Cobleskill

Synthetic Gas Analysis Report

Sample No.:	SB080113-1112
Sample Date:	8/1/2013
Sample Description:	IIRPG, Pine Shavings
Analysis Date:	8/1/2013

Analysis by Gas Chromatograph

Component	Chemical Formula	Analysis % Volume	Analysis % mole	Analysis % Mass
Hydrogen	H2	6.9%	6.9%	0.5%
Oxygen	O2	2.4%	2.4%	2.8%
Nitrogen	N2	56.4%	56.4%	58.0%
Methane	CH4	1.7%	1.7%	1.0%
Carbon Monoxide	CO	25.3%	25.3%	26.0%
Carbon Dioxide	CO2	7.3%	7.3%	11.7%
Water	H2O	0.0%	0.0%	0.0%
Acetylene	C2H2	0.0%	0.0%	0.0%
Ethylene	C2H4	0.0%	0.0%	0.0%
Ethane	C2H6	0.0%	0.0%	0.0%
	Total =	100%	100%	100%

Stoichiometric Combustion Products:

CO2	0.436	lb per lb of combustible
H2O	0.068	lb per lb of combustible
N2	0.760	lb per lb of combustible

CO2	0.270	ft^3 per ft^3 of combustible
H2O	0.103	ft^3 per ft^3 of combustible
N2	0.733	ft^3 per ft^3 of combustible

Calculated Values:

Molecular Weight - MW	27.28	
Resultant Gas Constant - R	56.66	Ft-lbf/lbm/R
Specific Gravity - SG	0.942	
Density at 70 F & 14.7 psia	0.0706	lbm/ft^3
Ratio of Specific Heats - k	1.3852	Cp/Cv
Critical Pressure Ratio - CPR	0.5143	
High Heating Value - HHV	121	BTU/SCF
Low Heating Value - LHV	116	BTU/SCF
Stoichometric Air:Fuel Ratio	0.928	by Volume
Stoichometric Air:Fuel Ratio	0.872	by Mass
Low Flammability Limit in Air	3.5%	LFL
High Flammability Limit in Air	24.2%	HFL
Auto Ignition Temperature	1,085	deg F

Technician Initials:	JTX
Report Date:	8/1/2013

SUNY RF The Research Foundation for The State University of New York

SUNY Cobleskill

Synthetic Gas Analysis Report

Sample No.:	SB080113-1050
Sample Date:	8/1/2013
Sample Description:	IIRPG, Pine Shavings
Analysis Date:	8/1/2013

Analysis by Gas Chromatograph

Component	Chemical Formula	Analysis % Volume	Analysis % mole	Analysis % Mass
Hydrogen	H2	7.5%	7.5%	0.6%
Oxygen	O2	1.5%	1.5%	1.8%
Nitrogen	N2	54.5%	54.5%	56.3%
Methane	CH4	1.6%	1.6%	1.0%
Carbon Monoxide	CO	27.4%	27.4%	28.2%
Carbon Dioxide	CO2	7.5%	7.5%	12.1%
Water	H2O	0.0%	0.0%	0.0%
Acetylene	C2H2	0.0%	0.0%	0.0%
Ethylene	C2H4	0.0%	0.0%	0.0%
Ethane	C2H6	0.0%	0.0%	0.0%
	Total =	100%	100%	100%

Stoichiometric Combustion Products:

CO2	0.470	lb per lb of combustible
H2O	0.071	lb per lb of combustible
N2	0.810	lb per lb of combustible

CO2	0.290	ft^3 per ft^3 of combustible
H2O	0.107	ft^3 per ft^3 of combustible
N2	0.778	ft^3 per ft^3 of combustible

Calculated Values:

Molecular Weight - MW	27.14	
Resultant Gas Constant - R	56.95	Ft-lbf/lbm/R
Specific Gravity - SG	0.937	
Density at 70 F & 14.7 psia	0.0702	lbm/ft^3
Ratio of Specific Heats - k	1.3848	Cp/Cv
Critical Pressure Ratio - CPR	0.5129	
High Heating Value - HHV	129	BTU/SCF
Low Heating Value - LHV	123	BTU/SCF
Stoichometric Air:Fuel Ratio	0.984	by Volume
Stoichometric Air:Fuel Ratio	0.927	by Mass
Low Flammability Limit in Air	3.8%	LFL
High Flammability Limit in Air	26.1%	HFL
Auto Ignition Temperature	1,086	deg F

Technician Initials:	JTX
Report Date:	8/1/2013

SUNY RF The Research Foundation for The State University of New York

SUNY Cobleskill

Synthetic Gas Analysis Report

Sample No.:	SB071613-1115
Sample Date:	7/16/2013
Sample Description:	IIRPG, Pine Shavings
Analysis Date:	7/17/2013

Analysis by Gas Chromatograph

Component	Chemical Formula	Analysis % Volume	Analysis % mole	Analysis % Mass
Hydrogen	H2	15.2%	15.2%	1.2%
Oxygen	O2	0.0%	0.0%	0.0%
Nitrogen	N2	60.6%	60.6%	67.9%
Methane	CH4	2.8%	2.8%	1.8%
Carbon Monoxide	CO	13.3%	13.3%	14.9%
Carbon Dioxide	CO2	8.0%	8.0%	14.2%
Water	H2O	0.0%	0.0%	0.0%
Acetylene	C2H2	0.0%	0.0%	0.0%
Ethylene	C2H4	0.0%	0.0%	0.0%
Ethane	C2H6	0.0%	0.0%	0.0%
	Total =	100%	100%	100%

Stoichiometric Combustion Products:

CO2	0.284	lb per lb of combustible
H2O	0.150	lb per lb of combustible
N2	0.847	lb per lb of combustible

CO2	0.161	ft^3 per ft^3 of combustible
H2O	0.208	ft^3 per ft^3 of combustible
N2	0.749	ft^3 per ft^3 of combustible

Calculated Values:

Molecular Weight - MW	25.01	
Resultant Gas Constant - R	61.79	Ft-lbf/lbm/R
Specific Gravity - SG	0.863	
Density at 70 F & 14.7 psia	0.0647	lbm/ft^3
Ratio of Specific Heats - k	1.3817	Cp/Cv
Critical Pressure Ratio - CPR	0.4920	
High Heating Value - HHV	121	BTU/SCF
Low Heating Value - LHV	110	BTU/SCF
Stoichometric Air:Fuel Ratio	0.948	by Volume
Stoichometric Air:Fuel Ratio	0.822	by Mass
Low Flammability Limit in Air	2.4%	LFL
High Flammability Limit in Air	21.7%	HFL
Auto Ignition Temperature	1,028	deg F

Technician Initials:	JTX
Report Date:	7/17/2013

SUNY RF The Research Foundation for The State University of New York

SUNY Cobleskill

Synthetic Gas Analysis Report

Sample No.:	SB071613-1025
Sample Date:	7/16/2013
Sample Description:	IIRPG, Pine Shavings
Analysis Date:	7/17/2013

Analysis by Gas Chromatograph

Component	Chemical Formula	Analysis % Volume	Analysis % mole	Analysis % Mass
Hydrogen	H2	11.0%	11.0%	0.9%
Oxygen	O2	0.0%	0.0%	0.0%
Nitrogen	N2	72.0%	72.0%	78.1%
Methane	CH4	2.0%	2.0%	1.3%
Carbon Monoxide	CO	9.4%	9.4%	10.2%
Carbon Dioxide	CO2	5.6%	5.6%	9.6%
Water	H2O	0.0%	0.0%	0.0%
Acetylene	C2H2	0.0%	0.0%	0.0%
Ethylene	C2H4	0.0%	0.0%	0.0%
Ethane	C2H6	0.0%	0.0%	0.0%
	Total =	100%	100%	100%

Stoichiometric Combustion Products:

CO2	0.194	lb per lb of combustible
H2O	0.105	lb per lb of combustible
N2	0.586	lb per lb of combustible

CO2	0.114	ft^3 per ft^3 of combustible
H2O	0.150	ft^3 per ft^3 of combustible
N2	0.535	ft^3 per ft^3 of combustible

Calculated Values:

Molecular Weight - MW	25.82	
Resultant Gas Constant - R	59.84	Ft-lbf/lbm/R
Specific Gravity - SG	0.891	
Density at 70 F & 14.7 psia	0.0668	lbm/ft^3
Ratio of Specific Heats - k	1.3875	Cp/Cv
Critical Pressure Ratio - CPR	0.5007	
High Heating Value - HHV	86	BTU/SCF
Low Heating Value - LHV	79	BTU/SCF
Stoichometric Air:Fuel Ratio	0.677	by Volume
Stoichometric Air:Fuel Ratio	0.567	by Mass
Low Flammability Limit in Air	1.7%	LFL
High Flammability Limit in Air	15.5%	HFL
Auto Ignition Temperature	1,027	deg F

Technician Initials:	JTX
Report Date:	7/17/2013

SUNY RF The Research Foundation for The State University of New York

SUNY Cobleskill

Synthetic Gas Analysis Report

Sample No.:	SB062013-1336
Sample Date:	6/20/2013
Sample Description:	IIRPG, Pine Shavings
Analysis Date:	6/20/2013

Analysis by Gas Chromatograph

Component	Chemical Formula	Analysis % Volume	Analysis % mole	Analysis % Mass
Hydrogen	H2	3.2%	3.2%	0.2%
Oxygen	O2	3.6%	3.6%	3.9%
Nitrogen	N2	65.0%	65.0%	61.5%
Methane	CH4	1.9%	1.9%	1.0%
Carbon Monoxide	CO	10.6%	10.6%	10.0%
Carbon Dioxide	CO2	15.7%	15.7%	23.3%
Water	H2O	0.0%	0.0%	0.0%
Acetylene	C2H2	0.0%	0.0%	0.0%
Ethylene	C2H4	0.0%	0.0%	0.0%
Ethane	C2H6	0.0%	0.0%	0.0%
	Total =	100%	100%	100%

Stoichiometric Combustion Products:

CO2	0.186	lb per lb of combustible
H2O	0.043	lb per lb of combustible
N2	0.386	lb per lb of combustible

CO2	0.125	ft^3 per ft^3 of combustible
H2O	0.070	ft^3 per ft^3 of combustible
N2	0.404	ft^3 per ft^3 of combustible

Calculated Values:

Molecular Weight - MW	29.62	
Resultant Gas Constant - R	52.18	Ft-lbf/lbm/R
Specific Gravity - SG	1.022	
Density at 70 F & 14.7 psia	0.0767	lbm/ft^3
Ratio of Specific Heats - k	1.3712	Cp/Cv
Critical Pressure Ratio - CPR	0.5340	
High Heating Value - HHV	64	BTU/SCF
Low Heating Value - LHV	60	BTU/SCF
Stoichometric Air:Fuel Ratio	0.512	by Volume
Stoichometric Air:Fuel Ratio	0.453	by Mass
Low Flammability Limit in Air	1.5%	LFL
High Flammability Limit in Air	10.5%	HFL
Auto Ignition Temperature	1,082	deg F

Technician Initials:	JTX
Report Date:	6/20/2013

SUNY RF The Research Foundation for The State University of New York

SUNY Cobleskill

Synthetic Gas Analysis Report

Sample No.:	SB062013-1130
Sample Date:	6/20/2013
Sample Description:	IIRPG, Pine Shavings
Analysis Date:	6/20/2013

Analysis by Gas Chromatograph

Component	Chemical Formula	Analysis % Volume	Analysis % mole	Analysis % Mass
Hydrogen	H2	7.2%	7.2%	0.5%
Oxygen	O2	2.9%	2.9%	3.3%
Nitrogen	N2	53.0%	53.0%	52.0%
Methane	CH4	3.4%	3.4%	1.9%
Carbon Monoxide	CO	16.7%	16.7%	16.4%
Carbon Dioxide	CO2	16.8%	16.8%	26.0%
Water	H2O	0.0%	0.0%	0.0%
Acetylene	C2H2	0.0%	0.0%	0.0%
Ethylene	C2H4	0.0%	0.0%	0.0%
Ethane	C2H6	0.0%	0.0%	0.0%
	Total =	100%	100%	100%

Stoichiometric Combustion Products:

CO2	0.309	lb per lb of combustible
H2O	0.088	lb per lb of combustible
N2	0.698	lb per lb of combustible

CO2	0.201	ft^3 per ft^3 of combustible
H2O	0.140	ft^3 per ft^3 of combustible
N2	0.704	ft^3 per ft^3 of combustible

Calculated Values:

Molecular Weight - MW	28.54	
Resultant Gas Constant - R	54.14	Ft-lbf/lbm/R
Specific Gravity - SG	0.985	
Density at 70 F & 14.7 psia	0.0739	lbm/ft^3
Ratio of Specific Heats - k	1.3674	Cp/Cv
Critical Pressure Ratio - CPR	0.5238	
High Heating Value - HHV	111	BTU/SCF
Low Heating Value - LHV	104	BTU/SCF
Stoichometric Air:Fuel Ratio	0.891	by Volume
Stoichometric Air:Fuel Ratio	0.791	by Mass
Low Flammability Limit in Air	2.5%	LFL
High Flammability Limit in Air	18.3%	HFL
Auto Ignition Temperature	1,070	deg F

Technician Initials:	JTX
Report Date:	6/20/2013

SUNY RF The Research Foundation for The State University of New York

SUNY Cobleskill

Synthetic Gas Analysis Report

Sample No.:	SB062013-1115
Sample Date:	6/20/2013
Sample Description:	IIRPG, Pine Shavings
Analysis Date:	6/20/2013

Analysis by Gas Chromatograph

Component	Chemical Formula	Analysis % Volume	Analysis % mole	Analysis % Mass
Hydrogen	H2	7.4%	7.4%	0.5%
Oxygen	O2	2.8%	2.8%	3.1%
Nitrogen	N2	54.6%	54.6%	53.9%
Methane	CH4	3.5%	3.5%	2.0%
Carbon Monoxide	CO	15.6%	15.6%	15.4%
Carbon Dioxide	CO2	16.2%	16.2%	25.1%
Water	H2O	0.0%	0.0%	0.0%
Acetylene	C2H2	0.0%	0.0%	0.0%
Ethylene	C2H4	0.0%	0.0%	0.0%
Ethane	C2H6	0.0%	0.0%	0.0%
	Total =	100%	100%	100%

Stoichiometric Combustion Products:

CO2	0.296	lb per lb of combustible
H2O	0.091	lb per lb of combustible
N2	0.692	lb per lb of combustible

CO2	0.191	ft^3 per ft^3 of combustible
H2O	0.143	ft^3 per ft^3 of combustible
N2	0.694	ft^3 per ft^3 of combustible

Calculated Values:

Molecular Weight - MW	28.38	
Resultant Gas Constant - R	54.46	Ft-lbf/lbm/R
Specific Gravity - SG	0.980	
Density at 70 F & 14.7 psia	0.0735	lbm/ft^3
Ratio of Specific Heats - k	1.3684	Cp/Cv
Critical Pressure Ratio - CPR	0.5224	
High Heating Value - HHV	109	BTU/SCF
Low Heating Value - LHV	102	BTU/SCF
Stoichometric Air:Fuel Ratio	0.879	by Volume
Stoichometric Air:Fuel Ratio	0.780	by Mass
Low Flammability Limit in Air	2.4%	LFL
High Flammability Limit in Air	17.6%	HFL
Auto Ignition Temperature	1,067	deg F

Technician Initials:	JTX
Report Date:	6/20/2013

SUNY RF The Research Foundation for The State University of New York

SUNY Cobleskill

Synthetic Gas Analysis Report

Sample No.:	SB062013-1101
Sample Date:	6/20/2013
Sample Description:	IIRPG, Pine Shavings
Analysis Date:	6/20/2013

Analysis by Gas Chromatograph

Component	Chemical Formula	Analysis % Volume	Analysis % mole	Analysis % Mass
Hydrogen	H2	8.5%	8.5%	0.6%
Oxygen	O2	2.2%	2.2%	2.5%
Nitrogen	N2	54.1%	54.1%	54.2%
Methane	CH4	2.7%	2.7%	1.5%
Carbon Monoxide	CO	17.6%	17.6%	17.6%
Carbon Dioxide	CO2	15.0%	15.0%	23.5%
Water	H2O	0.0%	0.0%	0.0%
Acetylene	C2H2	0.0%	0.0%	0.0%
Ethylene	C2H4	0.0%	0.0%	0.0%
Ethane	C2H6	0.0%	0.0%	0.0%
	Total =	100%	100%	100%

Stoichiometric Combustion Products:

CO2	0.319	lb per lb of combustible
H2O	0.089	lb per lb of combustible
N2	0.700	lb per lb of combustible

CO2	0.203	ft^3 per ft^3 of combustible
H2O	0.138	ft^3 per ft^3 of combustible
N2	0.692	ft^3 per ft^3 of combustible

Calculated Values:

Molecular Weight - MW	27.98	
Resultant Gas Constant - R	55.24	Ft-lbf/lbm/R
Specific Gravity - SG	0.966	
Density at 70 F & 14.7 psia	0.0724	lbm/ft^3
Ratio of Specific Heats - k	1.3706	Cp/Cv
Critical Pressure Ratio - CPR	0.5189	
High Heating Value - HHV	111	BTU/SCF
Low Heating Value - LHV	104	BTU/SCF
Stoichometric Air:Fuel Ratio	0.876	by Volume
Stoichometric Air:Fuel Ratio	0.771	by Mass
Low Flammability Limit in Air	2.7%	LFL
High Flammability Limit in Air	19.8%	HFL
Auto Ignition Temperature	1,065	deg F

Technician Initials:	JTX
Report Date:	6/20/2013

SUNY RF The Research Foundation for The State University of New York

SUNY Cobleskill

Synthetic Gas Analysis Report

Sample No.:	SB062013-1052
Sample Date:	6/20/2013
Sample Desription:	IIRPG, Pine Shavings
Analysis Date:	6/20/2013

Analysis by Gas Chromatograph

Component	Chemical Formula	Analysis % Volume	Analysis % mole	Analysis % Mass
Hydrogen	H2	9.2%	9.2%	0.7%
Oxygen	O2	2.0%	2.0%	2.3%
Nitrogen	N2	55.8%	55.8%	56.5%
Methane	CH4	2.1%	2.1%	1.2%
Carbon Monoxide	CO	17.4%	17.4%	17.6%
Carbon Dioxide	CO2	13.6%	13.6%	21.6%
Water	H2O	0.0%	0.0%	0.0%
Acetylene	C2H2	0.0%	0.0%	0.0%
Ethylene	C2H4	0.0%	0.0%	0.0%
Ethane	C2H6	0.0%	0.0%	0.0%
	Total =	100%	100%	100%

Stoichiometric Combustion Products:

CO2	0.311	lb per lb of combustible
H2O	0.087	lb per lb of combustible
N2	0.673	lb per lb of combustible

CO2	0.195	ft^3 per ft^3 of combustible
H2O	0.133	ft^3 per ft^3 of combustible
N2	0.658	ft^3 per ft^3 of combustible

Calculated Values:

Molecular Weight - MW	27.63	
Resultant Gas Constant - R	55.92	Ft-lbf/lbm/R
Specific Gravity - SG	0.954	
Density at 70 F & 14.7 psia	0.0715	lbm/ft^3
Ratio of Specific Heats - k	1.3731	Cp/Cv
Critical Pressure Ratio - CPR	0.5161	
High Heating Value - HHV	107	BTU/SCF
Low Heating Value - LHV	100	BTU/SCF
Stoichometric Air:Fuel Ratio	0.832	by Volume
Stoichometric Air:Fuel Ratio	0.723	by Mass
Low Flammability Limit in Air	2.6%	LFL
High Flammability Limit in Air	20.1%	HFL
Auto Ignition Temperature	1,062	deg F

Technician Initials:	JTX
Report Date:	6/20/2013

SUNY RF The Research Foundation for The State University of New York

SUNY Cobleskill

Synthetic Gas Analysis Report

Sample No.:	SB060713-1251
Sample Date:	6/7/2013
Sample Description:	IIRPG, Pine Shavings
Analysis Date:	6/7/2013

Analysis by Gas Chromatograph

Component	Chemical Formula	Analysis % Volume	Analysis % mole	Analysis % Mass
Hydrogen	H2	4.8%	4.8%	0.3%
Oxygen	O2	0.9%	0.9%	1.0%
Nitrogen	N2	62.5%	62.5%	61.2%
Methane	CH4	1.7%	1.7%	0.9%
Carbon Monoxide	CO	17.8%	17.8%	17.5%
Carbon Dioxide	CO2	12.3%	12.3%	19.0%
Water	H2O	0.0%	0.0%	0.0%
Acetylene	C2H2	0.0%	0.0%	0.0%
Ethylene	C2H4	0.0%	0.0%	0.0%
Ethane	C2H6	0.0%	0.0%	0.0%
	Total =	100%	100%	100%

Stoichiometric Combustion Products:

CO2	0.300	lb per lb of combustible
H2O	0.052	lb per lb of combustible
N2	0.547	lb per lb of combustible

CO2	0.195	ft^3 per ft^3 of combustible
H2O	0.082	ft^3 per ft^3 of combustible
N2	0.552	ft^3 per ft^3 of combustible

Calculated Values:

Molecular Weight - MW	28.57	
Resultant Gas Constant - R	54.10	Ft-lbf/lbm/R
Specific Gravity - SG	0.986	
Density at 70 F & 14.7 psia	0.0739	lbm/ft^3
Ratio of Specific Heats - k	1.3765	Cp/Cv
Critical Pressure Ratio - CPR	0.5252	
High Heating Value - HHV	90	BTU/SCF
Low Heating Value - LHV	86	BTU/SCF
Stoichometric Air:Fuel Ratio	0.699	by Volume
Stoichometric Air:Fuel Ratio	0.634	by Mass
Low Flammability Limit in Air	2.5%	LFL
High Flammability Limit in Air	17.0%	HFL
Auto Ignition Temperature	1,086	deg F

Technician Initials:	JTX
Report Date:	6/7/2013

SUNY RF The Research Foundation for The State University of New York

SUNY Cobleskill

Synthetic Gas Analysis Report

Sample No.:	SB060713-1245
Sample Date:	6/7/2013
Sample Description:	IIRPG, Pine Shavings
Analysis Date:	6/7/2013

Analysis by Gas Chromatograph

Component	Chemical Formula	Analysis % Volume	Analysis % mole	Analysis % Mass
Hydrogen	H2	6.1%	6.1%	0.4%
Oxygen	O2	0.9%	0.9%	1.0%
Nitrogen	N2	61.5%	61.5%	61.0%
Methane	CH4	1.8%	1.8%	1.0%
Carbon Monoxide	CO	16.4%	16.4%	16.2%
Carbon Dioxide	CO2	13.1%	13.1%	20.3%
Water	H2O	0.0%	0.0%	0.0%
Acetylene	C2H2	0.0%	0.0%	0.0%
Ethylene	C2H4	0.0%	0.0%	0.0%
Ethane	C2H6	0.0%	0.0%	0.0%
	Total =	100%	100%	100%

Stoichiometric Combustion Products:

CO2	0.283	lb per lb of combustible
H2O	0.062	lb per lb of combustible
N2	0.561	lb per lb of combustible

CO2	0.182	ft^3 per ft^3 of combustible
H2O	0.097	ft^3 per ft^3 of combustible
N2	0.561	ft^3 per ft^3 of combustible

Calculated Values:

Molecular Weight - MW	28.28	
Resultant Gas Constant - R	54.64	Ft-lbf/lbm/R
Specific Gravity - SG	0.976	
Density at 70 F & 14.7 psia	0.0732	lbm/ft^3
Ratio of Specific Heats - k	1.3748	Cp/Cv
Critical Pressure Ratio - CPR	0.5223	
High Heating Value - HHV	91	BTU/SCF
Low Heating Value - LHV	86	BTU/SCF
Stoichometric Air:Fuel Ratio	0.710	by Volume
Stoichometric Air:Fuel Ratio	0.631	by Mass
Low Flammability Limit in Air	2.4%	LFL
High Flammability Limit in Air	16.9%	HFL
Auto Ignition Temperature	1,075	deg F

Technician Initials:	JTX
Report Date:	6/7/2013

SUNY RF The Research Foundation for The State University of New York

SUNY Cobleskill

Synthetic Gas Analysis Report

Sample No.:	SB060713-1132
Sample Date:	6/7/2013
Sample Description:	IIRPG, Pine Shavings
Analysis Date:	6/7/2013

Analysis by Gas Chromatograph

Component	Chemical Formula	Analysis % Volume	Analysis % mole	Analysis % Mass
Hydrogen	H2	5.8%	5.8%	0.4%
Oxygen	O2	0.9%	0.9%	1.0%
Nitrogen	N2	61.0%	61.0%	59.6%
Methane	CH4	2.3%	2.3%	1.3%
Carbon Monoxide	CO	15.0%	15.0%	14.7%
Carbon Dioxide	CO2	15.0%	15.0%	23.0%
Water	H2O	0.0%	0.0%	0.0%
Acetylene	C2H2	0.0%	0.0%	0.0%
Ethylene	C2H4	0.0%	0.0%	0.0%
Ethane	C2H6	0.0%	0.0%	0.0%
	Total =	100%	100%	100%

Stoichiometric Combustion Products:

CO2	0.267	lb per lb of combustible
H2O	0.066	lb per lb of combustible
N2	0.562	lb per lb of combustible

CO2	0.174	ft^3 per ft^3 of combustible
H2O	0.105	ft^3 per ft^3 of combustible
N2	0.569	ft^3 per ft^3 of combustible

Calculated Values:

Molecular Weight - MW	28.65	
Resultant Gas Constant - R	53.95	Ft-lbf/lbm/R
Specific Gravity - SG	0.989	
Density at 70 F & 14.7 psia	0.0741	lbm/ft^3
Ratio of Specific Heats - k	1.3714	Cp/Cv
Critical Pressure Ratio - CPR	0.5252	
High Heating Value - HHV	91	BTU/SCF
Low Heating Value - LHV	86	BTU/SCF
Stoichometric Air:Fuel Ratio	0.720	by Volume
Stoichometric Air:Fuel Ratio	0.637	by Mass
Low Flammability Limit in Air	2.2%	LFL
High Flammability Limit in Air	15.8%	HFL
Auto Ignition Temperature	1,074	deg F

Technician Initials:	JTX
Report Date:	6/7/2013

SUNY RF The Research Foundation for The State University of New York

SUNY Cobleskill

Synthetic Gas Analysis Report

Sample No.:	SB060713-1048
Sample Date:	6/7/2013
Sample Description:	IIRPG, Pine Shavings
Analysis Date:	6/7/2013

Analysis by Gas Chromatograph

Component	Chemical Formula	Analysis % Volume	Analysis % mole	Analysis % Mass
Hydrogen	H2	6.1%	6.1%	0.4%
Oxygen	O2	0.9%	0.9%	1.1%
Nitrogen	N2	60.3%	60.3%	58.9%
Methane	CH4	2.5%	2.5%	1.4%
Carbon Monoxide	CO	14.2%	14.2%	13.8%
Carbon Dioxide	CO2	15.9%	15.9%	24.4%
Water	H2O	0.0%	0.0%	0.0%
Acetylene	C2H2	0.0%	0.0%	0.0%
Ethylene	C2H4	0.0%	0.0%	0.0%
Ethane	C2H6	0.0%	0.0%	0.0%
	Total =	100%	100%	100%

Stoichiometric Combustion Products:

CO2	0.256	lb per lb of combustible
H2O	0.070	lb per lb of combustible
N2	0.564	lb per lb of combustible

CO2	0.167	ft^3 per ft^3 of combustible
H2O	0.112	ft^3 per ft^3 of combustible
N2	0.572	ft^3 per ft^3 of combustible

Calculated Values:

Molecular Weight - MW	28.70	
Resultant Gas Constant - R	53.84	Ft-lbf/lbm/R
Specific Gravity - SG	0.991	
Density at 70 F & 14.7 psia	0.0743	lbm/ft^3
Ratio of Specific Heats - k	1.3696	Cp/Cv
Critical Pressure Ratio - CPR	0.5255	
High Heating Value - HHV	91	BTU/SCF
Low Heating Value - LHV	86	BTU/SCF
Stoichometric Air:Fuel Ratio	0.724	by Volume
Stoichometric Air:Fuel Ratio	0.635	by Mass
Low Flammability Limit in Air	2.1%	LFL
High Flammability Limit in Air	15.5%	HFL
Auto Ignition Temperature	1,070	deg F

Technician Initials:	JTX
Report Date:	6/7/2013

SUNY RF The Research Foundation for The State University of New York

SUNY Cobleskill

Synthetic Gas Analysis Report

Sample No.:	SB060713-1011
Sample Date:	6/7/2013
Sample Description:	IIRPG, Pine Shavings
Analysis Date:	6/7/2013

Analysis by Gas Chromatograph

Component	Chemical Formula	Analysis % Volume	Analysis % mole	Analysis % Mass
Hydrogen	H2	3.7%	3.7%	0.3%
Oxygen	O2	1.3%	1.3%	1.4%
Nitrogen	N2	66.9%	66.9%	64.5%
Methane	CH4	1.1%	1.1%	0.6%
Carbon Monoxide	CO	14.3%	14.3%	13.8%
Carbon Dioxide	CO2	12.8%	12.8%	19.4%
Water	H2O	0.0%	0.0%	0.0%
Acetylene	C2H2	0.0%	0.0%	0.0%
Ethylene	C2H4	0.0%	0.0%	0.0%
Ethane	C2H6	0.0%	0.0%	0.0%
	Total =	100%	100%	100%

Stoichiometric Combustion Products:

CO2	0.233	lb per lb of combustible
H2O	0.036	lb per lb of combustible
N2	0.407	lb per lb of combustible
CO2	0.154	ft^3 per ft^3 of combustible
H2O	0.058	ft^3 per ft^3 of combustible
N2	0.418	ft^3 per ft^3 of combustible

Calculated Values:

Molecular Weight - MW	29.04	
Resultant Gas Constant - R	53.22	Ft-lbf/lbm/R
Specific Gravity - SG	1.002	
Density at 70 F & 14.7 psia	0.0752	lbm/ft^3
Ratio of Specific Heats - k	1.3763	Cp/Cv
Critical Pressure Ratio - CPR	0.5295	
High Heating Value - HHV	69	BTU/SCF
Low Heating Value - LHV	66	BTU/SCF
Stoichometric Air:Fuel Ratio	0.529	by Volume
Stoichometric Air:Fuel Ratio	0.471	by Mass
Low Flammability Limit in Air	2.0%	LFL
High Flammability Limit in Air	13.5%	HFL
Auto Ignition Temperature	1,087	deg F

Technician Initials:	JTX
Report Date:	6/7/2013

Appendix C: Engine Based Electrical Generating Systems, Diesel vs. Spark Engines

(Note that this section was submitted previously in response to a specific question at the October 2013 IPR)

Various methods exist to generate electricity from a gasification system operating on waste. Internal combustion (I/C) engines (spark ignition and diesel) are the simplest methods to convert gaseous fuel into mechanical work to drive a generator. Other methods include steam turbines, reciprocating steam engines, organic Rankine, Brayton gas turbines, and Stirling external combustion engines. Simplicity, power density, safety, emissions, and cost are the major considerations that make I/C engines the most attractive.

The primary problem with operating an I/C engine-driven generator on syngas is crankshaft speed control as the electrical load and syngas energy values vary. The intent of this document is to describe the differences between diesel and spark ignition engine-driven generators fueled by ultra-low energy waste derived syngas.

Diesel engine-driven generators offer significant advantages for military applications. Diesel generators operate smoothly with acceptable frequency and voltage regulation as the syngas energy value and electrical load varies. The main advantage of diesel engines is that they do not use intake air throttle control to regulate engine speed. Engine speed is controlled by a governor that meters the amount of liquid fuel injected into each cylinder. Significant amounts of excess oxygen exist in the exhaust stream and the engine is not sensitive to lean air to fuel ratios. The engine operates seamlessly with drastic variations in syngas energy levels with no adjustment of combustion air.

The greatest disadvantage of diesel driven generators is liquid fuel usage. The engine must use some liquid diesel fuel to initiate compression ignition of the gaseous fuel mixture and for crankshaft speed control.

Otto spark ignition internal combustion engines can operate on 100% gaseous fuel and do not require dual fueling to operate. This offers a significant advantage over a diesel since the engine can operate solely on waste derived gaseous fuel, eliminating the need for ongoing use of expensive fossil fuels. The avoidance of co-fueling with fossil fuels can economically justify applying this technology for use at municipalities within the United States.

The main disadvantage of spark ignition engines is the intake air flow must be throttled to control engine speed. Maintaining the proper fueling rate and air to fuel ratio is essential with dramatic airflow changes. The air to fuel ratio must be maintained slightly richer than stoichiometric combustion. Proper control of engine speed and air to fuel ratio is nearly impossible to regulate as the electrical load and syngas energy content vary simultaneously.

Numerous concepts have been researched and developed by other entities to address this problem with spark ignition engines. These concepts use multiple regulators and electronically actuated flow control valves that must respond with precision accuracy to ensure the engine is adequately fueled to maintain synchronous speed and mechanical power at the critical air to fuel ratio.

Adequate metering of air and fuel gas must occur at varying flows as the throttle adjusts to maintain crankshaft speed. Most engines that are designed to operate on gaseous fuel require extensive controls when the energy value is 40% to 60% of natural gas. Waste derived syngas has an energy content that is 10% to 15% of natural gas, making reliable fueling for electrical power generation difficult or nearly impossible.

Another problem with ultra-low energy syngas is low air to fuel ratios, which are around 1:1 by volume. The flow of combustion air is offset by gaseous fuel. Low energy fuel requires a high flow rate to meet the power demands of the engine. The engine can actually become starved for adequate combustion air under heavy load conditions, causing lugging or even a crash stop.

C.1 Diesel Engines for Military Applications

The military has expelled significant effort to standardize on one fuel for all battlefield applications. JP-8 is a multipurpose fuel blend that is able to power both diesel and jet engines. This allows the military to deliver only one fuel to meet the energy needs of contingency bases (CB). Diesel engine-driven generators fueled by JP-8 are almost exclusively used to generate electricity on FOBs.

The project team decided to pursue the use of diesel generators for this WTE application. The single battlefield fuel policy is an important factor, but diesel gensets offer greater flexibility than spark engines in that they can effectively generate power under multiple scenarios (Table C-1). A standard spark engine can only effectively generate power when the syngas fed to it is of good, consistent quality (a new operating concept is presented in Section C.8).

Table C-1. Diesel vs. Spark Operating Conditions.

Operating Condition Of WTE System	Diesel Genset Operation (Dual-Fuel With JP8)	Spark Genset Operation
used only as a generator, with no waste processing	Yes	no
bootstrap WTE system	Yes	no
highly variable waste feed, syngas quality	Yes	no
steady state WTE operations	Yes	yes

C.2 Waste Derived Syngas

Military applications require simplicity and reliability. The WTE system developed by SUNY Cobleskill uses a robust and simple approach to thermally convert wastes into a gaseous fuel. Unfortunately, mixed wastes have two problems; excessive moisture and low energy content. Gasifying low energy wastes with excessive moisture results in ultra-low energy synthetic gas (syngas). The energy content of this gas is 10% to 15% of natural gas.

Nitrogen dilution is the main reason why the energy value of the syngas is weak. Waste derived syngas can be over 50% nitrogen. The majority of nitrogen is from air entering the gasifier to provide oxygen to combust char (flaming pyrolysis). The energy content of the syngas can easily be doubled by using pure oxygen, instead of air, for char combustion. However, the project team

believes that the use of oxygen is out of the question for contingency operations. Therefore the focus of research has been the most effective use possible of an internal combustion engine operating on ultra-low energy, unenhanced syngas.

C.3 Energy Level of Waste Derived Syngas

The LHV of the syngas must be considered when determining fueling requirements for engines. HHV is not used since water vapor is not condensed in the exhaust stream. The LHV of waste derived syngas varies between 90 and 180 BTU per standard cubic foot (BTU/SCF). The energy varies based on the feedstock. Low energy dripping wet feedstock results in low energy syngas. The intent is to homogenize feedstock to obtain an average energy content (HHV) of about 7500 BTU/lb. Depending on the FC content, this feedstock would generate a syngas with a LHV of 120 to 160 BTU/SCF.

Syngas with an energy content of 90 to 100 BTU/SCF is quasi flammable. Significant flame separation occurs as the energy value decreases. The flame blows itself out when the auto-ignition temperature cannot be maintained. A dual fueled engine can still operate with fossil fuel savings even if the syngas cannot sustain combustion in air.

C.4 Dual Fueling of Diesel Engine-Driven Generators

Diesel engines require very minor modifications to the air system to operate dual fueled on syngas and liquid diesel fuel. The only modification necessary is piping to introduce gaseous fuel into the airstream entering the engine. Figure C-1 shows the simplest configuration to feed syngas fuel into a diesel engine.

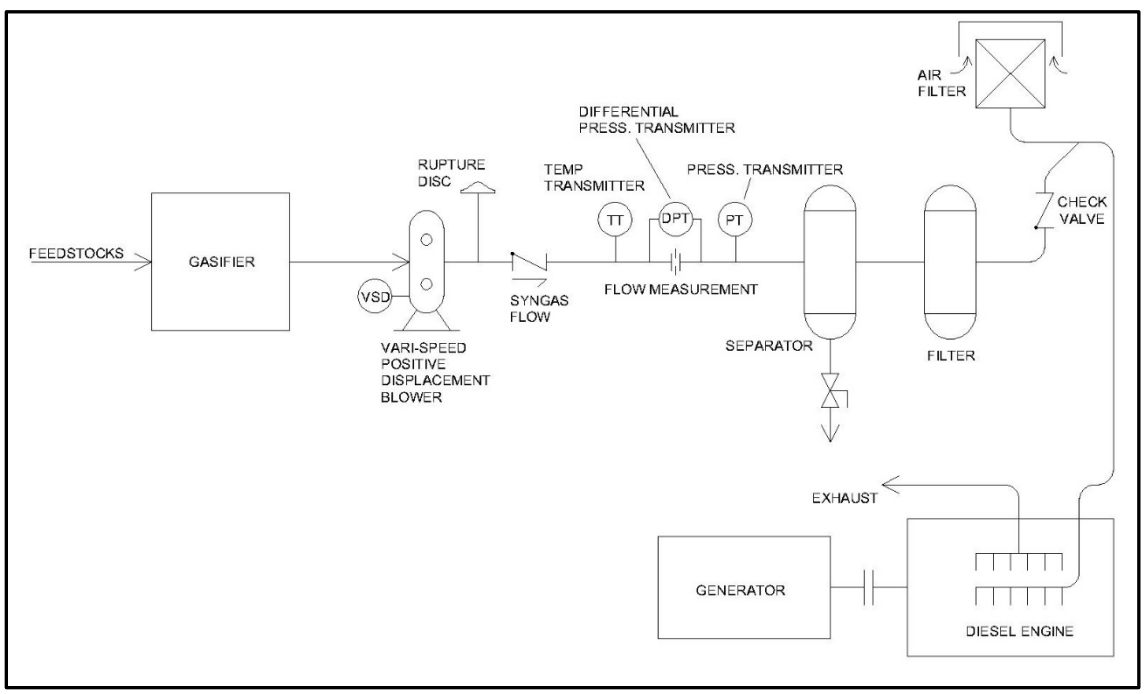

Figure C-1. Syngas Fuel Feed System into a Naturally Aspirated Diesel Engine.

A variable speed positive displacement blower is used to meter the feed of syngas to the engine at slightly positive pressure. The blower aspirates the gasifier system and engine vacuum is not used to avoid the significant loss of engine power. A flow orifice measures the flow of syngas. Gaseous fuel is fed into the intake air stream and enters the engine. The engine normally operates with significant amounts of excess oxygen in the exhaust stream, allowing any gaseous fuel to immediately combust.

The engine speed immediately increases when adding gaseous fuel. The engine governor monitors crankshaft speed and decreases the liquid fuel injection rate to maintain synchronous speed. The result is an immediate reduction in liquid fuel consumption. The flow of syngas can be further increased to offset liquid fuel usage. Limitations are insufficient excess air in the exhaust stream and pre-detonation (pre-ignition or excessive pinging) due to excessive gaseous fuel content exploding too quickly.

The flow of syngas is controlled at any load based on engine speed. Increasing the flow of syngas increases the engine speed on mechanically governed engines. The desired engine speed is the maximum governor speed at the fully unloaded condition. In most cases, this is 1860 rpm for a 4-pole generator. The flow of syngas is increased until the engine operates at the maximum allowable speed that results in the maximum liquid fuel savings. The engine can operate at any load using this method. Operating a diesel engine with the maximum syngas feed rate at full rated load results in 80% liquid fuel savings.

Increasing the syngas flow above the maximum allowable will cause the governor to momentarily stop the flow of liquid fuel into the engine. The engine speed drops and the governor starts the flow of injection again. This results in a surging of engine speed and is an indication of over-fueling the engine with syngas. Reducing the flow of syngas immediately corrects surging. Fueling is normally controlled to 99.5% of the maximum speed or 1854 RPM to avoid surging. The engine automatically transitions from dual-fuel mode to 100% liquid fuel by stopping the flow of syngas into the intake air. Only a slight variation in engine performance is observed when making these transitions.

Modifying an engine to use less than 20% liquid fuel injection rate at full load is possible. SUNY Cobleskill has demonstrated operating mechanically injected diesels dual fueled with over 96% reduction in liquid fuel usage. Although this is possible, numerous technical problems arise. The greatest problem being pre-ignition and detonation that eventually causes internal engine damage. Fuel savings in excess of 80% are possible using electronic engine controls, but further research would be required, including the need for altering engine electronic control systems.

Turbo charging increases the mass flow and compressive pressure within the engine. For every atmosphere of boost pressure, the flow doubles (if intercooled to the original temperature before injecting into the engine). A 3.0 liter naturally aspirated engine will have a suction air flow of 95 cubic feet per minute at standard conditions (SCFM). Applying a turbo charger to boost the air pressure in the intake manifold to 14.7 psi gauge will result in an isentropic discharge temperature of 186 °F. If an intercooler is not used to cool the air, the flow into the engine increases to 156 SCFM. If an intercooler cools the air to 100 °F before entering the engine, the flow further increases to 180 SCFM. Intercooling increases the density of the air, which increases the aspiration rate.

The cylinder pressure at top dead center also varies with the turbo pressure. An engine that has a compression ratio of 18:1 will have maximum cylinder pressure of 250 psi naturally aspirated. Turbo charging the intake manifold on the same engine to 14.7 psi gauge will increase the cylinder pressure to 515 psi, resulting in a significant power increase. The main purpose of a turbo charger is to get significantly more power out of a smaller engine. Turbo charging also helps to regulate emissions on modern engines.

Ultra-low energy syngas has a specific gravity of 0.9 to 0.95 with thermodynamic properties similar to air (ratio of specific heats). Feeding syngas into a turbo charged engine has negligible effect on the aspiration, other than displacing air.

A turbo charger normally operates at a rotational speed of 70,000 to 90,000 rpm. The syngas must be free of condensable tars and particulates to prevent accumulation on the turbine blades of the compressor. Any accumulation will cause the turbine to operate out of balance, causing vibration, bearing damage, and eventual failure. A naturally aspirated engine* is desirable over turbo charged engines due to this concern. Figure C-2 shows the gas feed controls for a turbo charged diesel engine.

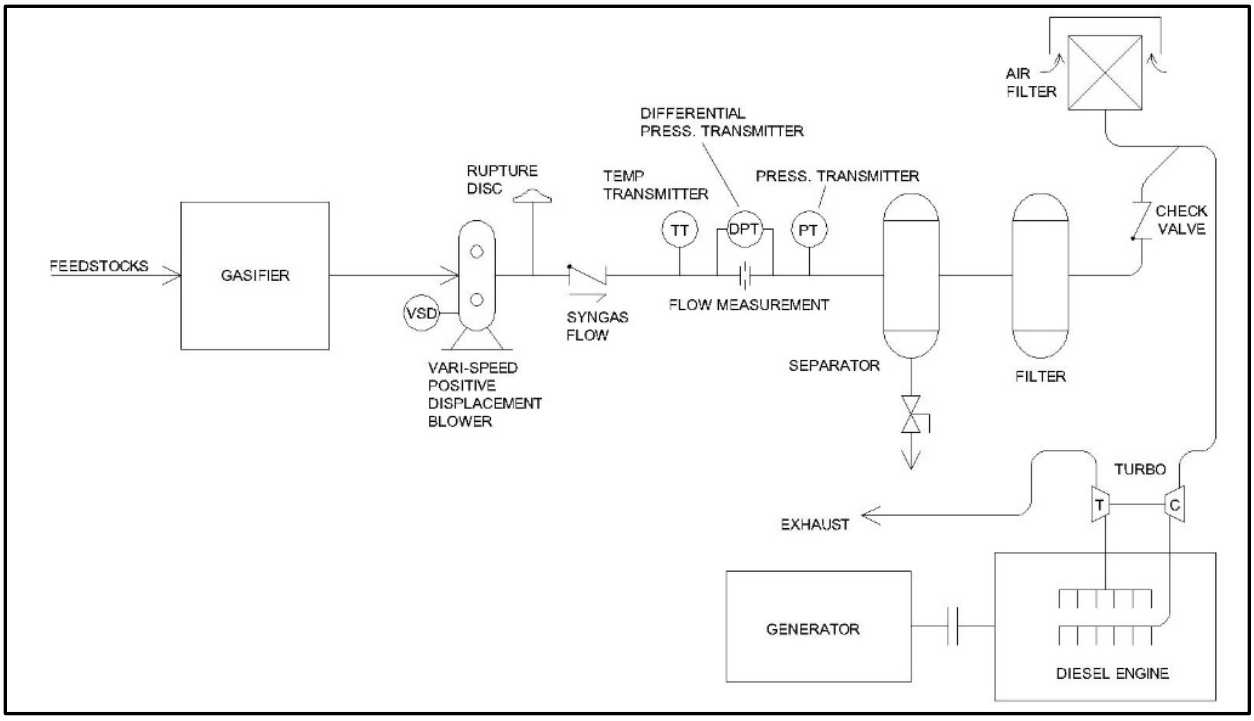

Figure C-2. Feeding Syngas into a Turbo Charged Diesel Engine.

Diesel engines operate with almost no power loss (less than 10%) when dual fueled on ultra-low energy syngas using this method. The governor maintains engine power by varying the liquid fueling rate to maintain the required crankshaft speeds. The engine must operate with excess oxygen in the exhaust stream to maintain power. Excessively weak syngas will displace

* Unfortunately, naturally aspirated diesel engines are not readily available commercially, as manufacturers move towards universal turbo-charging to obtain higher power with smaller displacement.

combustion air and could cause the engine to crash stop due to the lack of adequate oxygen. An oxygen sensor is normally used in the exhaust to avoid over-fueling with syngas.

C.5 Comparing Diesel and Otto Spark Ignition Engines

Diesel engines are commonly preferred for generator applications over Otto I/C spark ignition engines mostly due to the ability of the engine to increase torque while maintaining shaft speed under sudden increases in load. Diesel engines operate under an entirely different thermodynamic cycle than do I/C spark ignition engines. Diesel engines operate at constant pressure (isobaric) for a significant portion of the stroke as the piston travels from top dead center to bottom dead center in the cylinder. This allows the greatest amount of torque to be placed onto the crankshaft by applying full force at the mid-stroke position.

The thermodynamic efficiency of most modern diesel engines varies from 30 to 43%. Otto I/C spark ignition engines vary from 15 to 28%. The thermodynamic cycle of the Otto engine varies dramatically from a diesel. Ignition in an Otto engine results in a severe pressure spike that rapidly decreases as the piston travels from top dead center to bottom dead center. This provides significantly less torque at the mid-stroke position.

Test data indicates a loss of thermodynamic efficiency when operating diesel engines dual-fuel on syngas. The hypothesis conclusion is the engine transitions from a diesel to an Otto when increasing the fueling rate of syngas. Dual fueling may result in a quasi “Otto-diesel” cycle. The gross thermodynamic efficiency of a Yanmar 4TNV88 naturally aspirated diesel engine drops from 38% to 26% when operating on 83% gaseous syngas and 17% liquid fuel.

C.6 Otto Spark Ignition Engines

Numerous parameters must be considered when applying spark ignition engines. Octane number is the resistance to pre-ignition used for gasoline engines. Traditionally, high octane fuels explode at a slower rate, allowing the use of high compression engines and the advancement of spark ignition. This increases power output without pre-ignition or detonation.

Pre-ignition and detonation are abnormal forms of combustion within the cylinder. Pre-ignition is when the mixture explodes in the cylinder before the spark plug fires. Detonation is unexpected accelerated combustion after the spark plug fires. The result of these problems is knocking, which eventually causes severe internal engine damage.

Octane is not a representative reference for gaseous fuels. The gas engine industry has adopted the methane number system as a means to equate a fuels resistance to pre-ignition and detonation. The methane number scale equates the value of 100 with methane and 0 (zero) with hydrogen. Hydrogen is a very fast burning gas prone to pre-ignition and detonation. Mixtures of gases fall between.

The main design issues to avoid pre-ignition and detonation are the following:

- compression ratio
- ignition timing
- air temperature entering the cylinder

- engine power de-rating.

The engine timing must be adjusted to avoid pre-ignition and detonation. This adjustment is normally made based on methane number. Modern engines use sensors and electronic engine controls to vary the ignition timing to avoid these problems. Advancing ignition timing increases engine power and retarding ignition timing reduces engine power. A gas with a low methane number (with appreciable hydrogen content) will require the retarding the ignition timing, resulting in a power loss.

The second parameter of concern is Relative Power Capacity (RPC). RPC is used to determine the power loss of an engine due to fueling energy loss. RPC is the ratio of specific LHV of the fuel-air mixture (SLHV) of the fuel gas compared to natural gas. SLHV is the energy content of the fuel gas divided by the total flow into the engine (units are BTU/SCF). The ratio is a direct representative of power loss.

As discussed previously, maintaining crankshaft speed is nearly impossible when using intake throttling when fueling the engine on 100% ultra-low energy syngas. Figure C-3 shows the minimum gas controls that are necessary to feed syngas into an internal combustion spark ignition engine. Although, this arrangement is possible, fast response of gas controls to meet changes is power demand is highly questionable, even using the most modern electronic controls. A main gas energy (BTU adjustment) valve is required to change the flow of gas based on the LHV. The changes of gas flow and combustion air are dramatic for ultra-low energy syngas. A combustion based gas analyzer would be required to determine the LHV of the gas on a continual basis to maintain proper fuel metering. Gas controls also requires extensive use of pressure regulation devices for precision metering. In theory, the use of multiple pressure regulators is an acceptable means for gas regulation, but in practice, regulators have numerous mechanical problems when operating on syngas and have been found to be unreliable.

The presence of hydrogen within the syngas mixture presents numerous problems with operating spark ignition engines. Most of the gaseous fuel engines operating on natural gas, landfill gas, and digester gas are high compression diesel engines modified to operate as Otto spark ignition engines. High hydrogen content in the syngas mixture will lower the methane number and may prevent a traditional high compression gas engine from operating properly on syngas.

C.7 Power Loss of Otto Spark Ignition Engines

Unlike diesel engines, Otto spark ignition engines experience a significant power loss when operating on ultra-low energy syngas. The main power loss is from RPC. Ultra-low energy syngas requires a high flow of both fuel gas and air to enter the engine to develop power. Power loss results from the SLHV being too dilute. Partial power gains are possible by turbo or super charging.

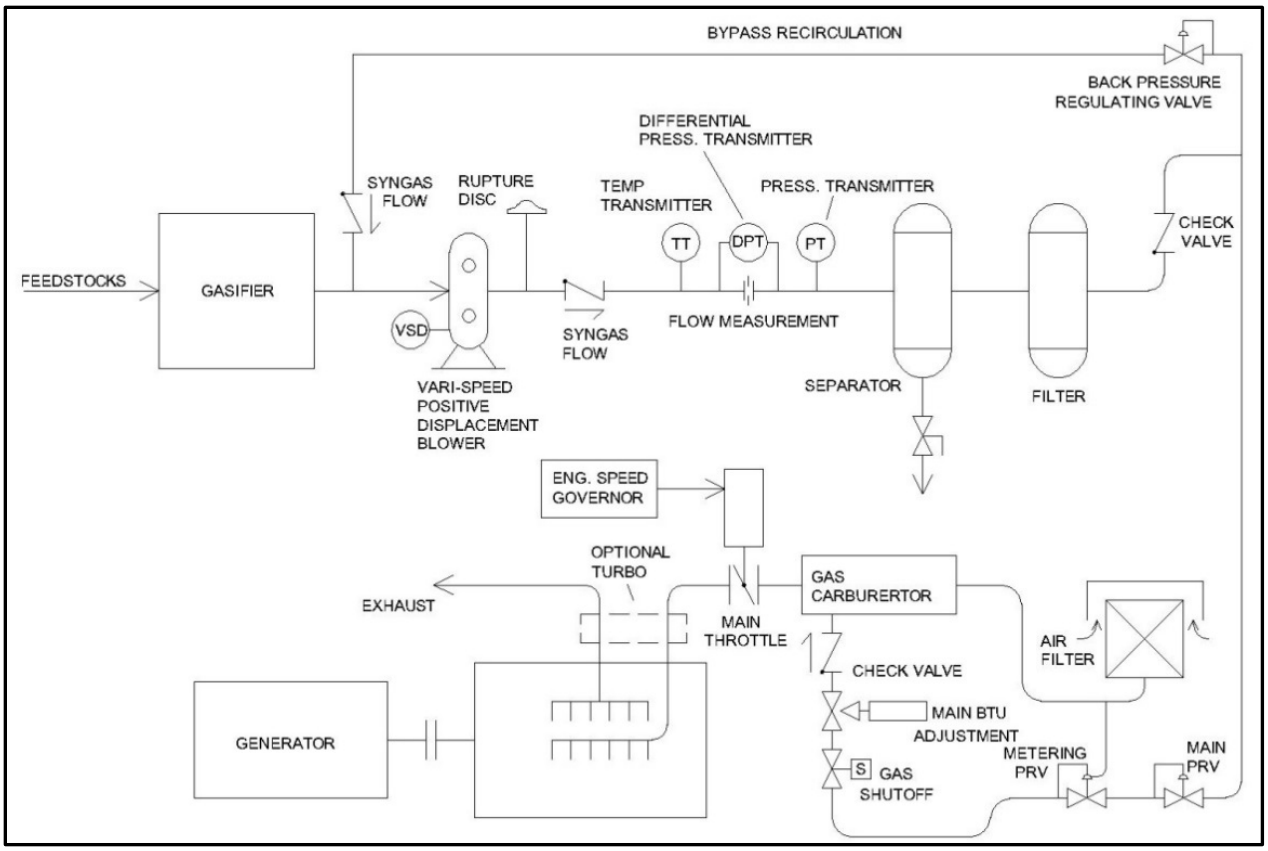

Figure C-3. Minimum Controls to Feed Ultra-Low Energy Syngas into and I/C Spark Ignition. Engine

The second main cause for power loss is pre-ignition and detonation (methane number). Engines must operate at retarded ignition timing and at lower compression ratios.

C.8 Hybrid Otto – Diesel Spark Ignition Engines

The hybrid Otto-Diesel spark ignition engine was developed by SUNY Cobleskill* to address the problems of operating an Otto spark ignition engine on ultra-low energy syngas. The advantages of both engines were combined. The primary focus was to modify the Otto spark ignition engine to handle gaseous fuel mixing and air control identical to a diesel.

The SUNY engine is designed to operate without a governor. Crankshaft speed is electrically controlled by the natural induction properties of the generator. The flammability limit of syngas is approximately 4.5% to 75%, allowing a wide range of air to fuel ratios where the engine will run.

The induction generator acts as a motor and spins the engine when grid power is applied. Syngas is fed into the intake air, ignition occurs, and the engine runs over a wide range of air to fuel ratios. The amount of syngas flow increases, allowing the engine to put mechanical power into

* Note that this work is not being pursued under SERDP funding, but is discussed here to fully address the topic. This technology may be pursued for military application at a later date under a separate program.

the electric motor. The induction motor transitions into a generator when the crankshaft exceeds the synchronous speed. Electrical power is pushed backwards from the generator onto the local grid for baseline use. The amount of power generated varies with the energy content and flow of the syngas fuel provided to the air intake. The engine continues to operate as long as the air to fuel ratio is within the wide range of flammability limits of the syngas. Research has determined this would be a very efficient method for electrical generation using ultra-low energy waste derived syngas.

The mixture of air and gaseous fuel enter the engine un-throttled. The flow of gaseous fuel is metered into the engine based on the engine speed. The flow of syngas increases until the engine reaches the speed that provides the maximum power output of the generator (synchronous speed plus the slip or the rated full load amps of the motor). The second limitation is sufficient excess air must exist for complete combustion. The limitation is to operate the engine similar to a diesel, with at least 3% excess oxygen in the exhaust stream. Figure C-4 shows the configuration required for the SUNY generating system.

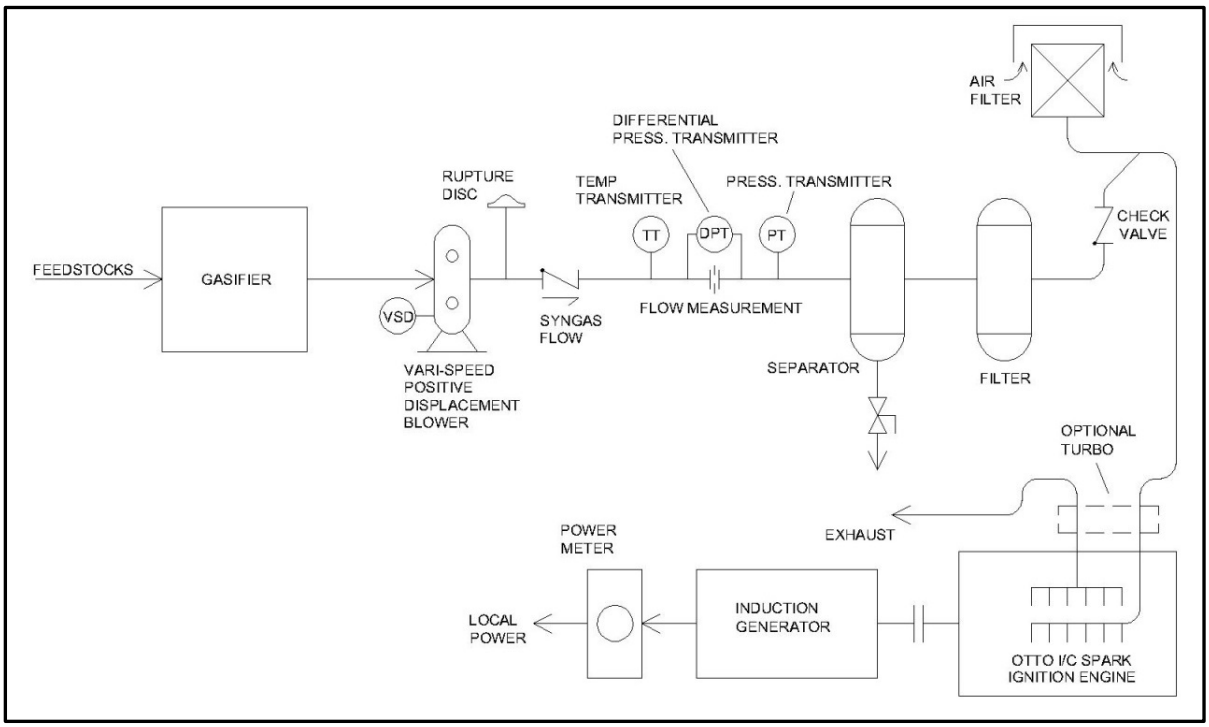

Figure C-4. Hybrid Diesel-Otto Generating System for Ultra-Low Energy Syngas.

The design approach is as follows:

1. Use a naturally aspirated engine to avoid turbo problems operating on syngas.
2. Use a standard gasoline engine with a low compression ratio (7:1 to 8.5:1) to avoid pre-ignition and detonation problems operating on syngas with a low methane number.
3. Oversize the engine (with a gasoline power rating 2.2 times) larger than the generator to accommodate for power loss and to minimize NOx formation.
4. Operate the engine at 3600 rpm to maximize power output.

This generation method is perfect for micro-grid applications. The application of smart grid technologies can enable precision load matching to regulate the syngas production of the WTE system to meet the baseline generation needs of the micro-grid. Battery / inverter based alternative energy systems can be tied directly to the induction generator for syncing power. This arrangement allows the SUNY generation system to meet the power demands and simultaneously back feed through the inverter to charge the battery bank.

A 2.2 kW hybrid Otto-Diesel generator was developed by SUNY Cobleskill and tested for over 200 hours on downdraft syngas by an intern. The results of operating this generator on various fuel gases are available in a separate report.

C.9 Generating Electricity

Most applications require alternating current (AC) electrical power. Power is generated at either 50 or 60 Hz. Most power in the Americas is 60 Hz. 50 Hz is prevalent in some foreign countries. Common generating voltages for 60 Hz applications are 480 VAC for 3-phase applications under 250 kW. Residential applications use smaller generators that operate on single phase 120/240 VAC power.

C.9.1. Alternating Current

Alternating current that changes polarity at a rate of 60 times per second (60 Hz) is required in the United States. Generators must operate at constant synchronous speed to provide frequency control based on the windings of the generator head as follows:

- Two Pole – 3600 rpm
- Four Pole – 1800 rpm
- Six Pole – 1200 rpm.

Most generator engines have a precision governor that regulates the engine speed within 2% of the required synchronous speed of the generator. For example, a four pole generator with a traditional mechanical governor will operate at 1860 rpm at no load and 1785 rpm at full load. The frequency varies from 62 Hz at no load to 59.5 Hz at full load.

Modern generators use electronic governor control. The electronic engine control module (ECM) uses with proportional integral derivative (PID) logic to regulate the engine speed at exactly at the synchronous speed. Frequency control can be within 0.1 Hz at varying electrical loads.

C.9.2. Inductive and Resistive AC Loads

The type of load must be considered when applying a generator. Inductive loads are applications where the electricity is used to drive magnetic devices, such as electric motors. Resistive loads are applications where the electricity is used for lighting or resistive heating.

Inductive loads create numerous electrical issues. Electric motors take a significant amount of inrush current to start, especially if the motor is connected to a high inertial load. The generator must be able to maintain synchronous speed when starting electric motors. Normal inrush current

can be over six times the full load operating current when direct starting across the line. The inrush current can be reduced using more complex switchgear or soft starters.

If the engine cannot provide enough power to maintain synchronous speed when starting an inductive load, the frequency and voltage will also drop with the generator speed, causing the electric motor to draw significantly more current. The result could turn into a runaway situation where the generator engine may not be able to create sufficient shaft power, causing the engine to lug or crash stall before electrical safety equipment disconnects the load.

Unlike inductive loads, resistive loads have minimal or no inrush current when starting. The starting inrush current is normally equal to the operating current. A properly sized generator can easily maintain synchronous speeds when energizing resistive loads.

A severe voltage spike may occur if the electrical load suddenly disconnects when the engine is lugging under the synchronous speed. Significant electrical damage may occur to wiring, busses, switchgear, and sensitive electronics when the generator is momentarily operating more than 3% over or under the synchronous speed.

C.9.3. Selecting Generators

The generator size is selected based on the sum of inductive and resistive loads. Common practice is to operate a generator at 20% to 30% load to provide sufficient reserve to start inductive loads.

Load control must be considered to ensure the generator has enough reserve power to start inductive loads. Most generators are sized for 3 to 6 times more capacity than the largest inductive load. For example, a 45 kW generator will provide ample power to start an air conditioner compressor with a 10 HP motor across the line if no other loads are connected. The generator will run at 17% load once the compressor is running. Resistive loads can be added after the inductive load is running. Load management is necessary for equipment that starts and stops automatically. Soft starters or variable frequency drives will allow the use of a smaller generator, but these devices are sensitive to generator power variations due to poor speed control.

C.9.4. Grid Power

Grid power provides an essentially infinite amount of energy to start inductive loads. The flow of electricity is limited only by transformer, wire, and switchgear capacities. Grid power provides a significant advantage over rotary generators by providing infinite resources to maintain frequency control at exactly 60 Hz when drawing heavy inrush current after connecting an inductive load.

C.9.5. Direct Current Power Generation

Generating direct current (DC) provides numerous advantages when operating a generator on syngas. The main advantage is dramatic engine speed variations do not matter when using a rectified field excited alternator. This type of system normally requires a battery bank and a DC to AC solid state inverter. This equipment is complex and is not well suited for military applications due to extensive use of solid state circuitry that is sensitive to static and dirty power.

Direct power generating systems are ideally suited for joint alternative energy systems (wind, solar, etc.) that normally operate on DC power. An internal combustion engine-driven DC generator can be used to provide baseline power and quick battery charging.

The overall feasibility of a DC power grid for contingency operations could be the subject of a future study.

C.10 Summary and Conclusions

Diesel generators are the most simple and reliable method to generate power from waste derived syngas, making them the obvious choice for military applications. Unfortunately, liquid fuel is required to operate a diesel generator on syngas, albeit at much lower usage rate for a given electrical output. Given the robust and flexible diesel engine generators, the present project team recommends, and will continue to develop a diesel WTE solution.

Otto spark ignition engines offer the ability to operate on 100% syngas without the need for secondary pilot fuels. Unfortunately, operating a spark ignition engine with a traditional gaseous fuel delivery system on ultra-low energy syngas is difficult and complex. Significant electrical damage will occur if the engine speed is not kept within 3%. A momentary over-speed or under-speed condition will cause power spikes that can severely damage electrical equipment.

The SUNY generating concept uses a hybrid Diesel – Otto engine directly coupled to an induction generator to address the issues with operating a spark ignition engine on ultra-low energy syngas. The generator operates nearly identical to a diesel driven unit without the need for a secondary fuel. This system does require an existing power network, and cannot operate independently.

Appendix D: Patent Application

The research team is pursuing intellectual property rights for the IIFPRG technology. The intention is that the DoD would have complete rights to develop and deploy this system, while the SUNY Research Foundation could pursue commercial or municipal markets. This section contains the Record of Invention forms, filed through the Research, Development, and Engineering Command (RDECOM).

INSTRUCTIONS FOR PATENT DISCLOSURE DATA RECORD
AMCCOM FORM 384-R

The following Technical Requirements must be included in the Descriptive Write Up Section:

The Patent Disclosure Data Record should contain replies to the following:

1. What problem does your invention solve? How long has the problem existed?
2. What old ways are available for solving the problem?
3. Why were the old ways unsatisfactory for solving the problem?
4. What are the new results and advantages of your invention?
5. Describe your invention. Include:
    a. Reproduction of drawings or sketches – number all elements.
    b. Name, reference, and describe function of numbered elements.
    c. List changes, additions, or improvements over the old ways.
    d. Indicate briefly, alternate methods of construction or composition.
    e. For basic inventions – note scientific principle upon which it is based, if known.
6. State sequence of operation of your invention, if applicable and not already included under (5).

Each inventor must sign and date each sheet of the disclosure and each reproduction of drawings. Also, two (2) witnesses who have read and understand the disclosure must sign and date each sheet of the disclosure and each reproduction of drawings.

Attach any pertinent literature, such as reports, which may aid in the preparation of a patent application.

NOTE: Reports are useful in preparing the patent application and should be supplied where available. However, reports cannot take the pace of this disclosure, and should not be provided for that purpose only.

NOTE: In cases in which there is more than one inventor, all inventors must have contributed to the invention in order to be included as joint inventors. Improper joinder of inventors can result in the invalidity of any resulting patent. Any questions in this regard should be referred to the ARDEC attorney handling the case.

Electronic Instructions:

Fill out the gray areas of the forms USING Microsoft Word.

Reproductions of pertinent drawings or sketches can be attached to the printed forms. These drawing must also be submitted electronically. Sign and date each sheet of disclosure and each reproduction of drawings. Forward the completed forms to lorilee.andrews@us.army.mil

PATENT DISCLOSURE DATA RECORD
(FOR ATTACHMENT TO MILITARY INVENTION RECORD)
(AMCCOMR 27-2)

Page Number:	Number of Pages:	Docket Number (Filled in by Legal Office:

Title of Invention: Inclined Indirect Flaming Pyrolysis Rotary Gasifier (IIFPRG)

REFERENCE DATA
LABORATORY OR ENGINEERING NOTEBOOK NUMBER PAGES
OTHER

DESCRIPTIVE WRITE UP (Include sketches separately)(This box will expand as needed, please hit returns at end of line)
Please see write up below.

INVENTOR(S)		WITNESSED AND UNDERSTOOD BY:	
SIGNATURE	DATE 6/11/13	SIGNATURE	DATE 6/11/13
SIGNATURE Paul Redner	DATE 6/11/13	SIGNATURE	DATE
SIGNATURE	DATE 6/11/13	SIGNATURE	DATE 6/11/13
SIGNATURE	DATE 8-5-13	SIGNATURE	DATE 8/5/13

AMCCOM FORM 384-R, 1 SEP 85

8-5-13 8-5-13

AMCCOM FORM 384-R
CONTINUATION PAGE FOR DESCRIPTIVE WRITE UP (AS NECESSARY)

1) Problem Solved:

Converts solid and liquid wastes to a synthetic fuel gas similar to natural gas with minimal or no feedstock preparation. Possible feedstocks include fuel crops, wood chips / byproducts, hay, straw, coal, agricultural wastes, municipal solid wastes, tires, lubricants, plastics, munitions, sewage sludge, construction and demolition debris, etc. Any feedstock that burns with an open flame can be processed. Technology will handle dripping wet feedstock, which is a common problem with most wastes. Produces a gas that can fuel an engine, allowing the only emission source to be engine exhaust, not incinerator flue gas. Flammable liquids, such as waste lubricants, can be added to feedstock. Metals, glass, soils, and other inert items simply pass through the gasifer and discharge with the ash. The only products from the process are ash and synthetic fuel gas.

2/3) Old Ways/ Competitive or Alternative Products

Stratified downdraft gasifiers (CPC, ISG). Rotary kiln gasifiers (direct and indirect). Plasma gasifiers. These alternative products are less effective and have operational issues when dealing with product waste streams.

4) Advantages:

No feedstock preparation (garbage truck approach). Handles dripping wet feedstock. Converts wastes to electrical and heat energy, or liquid fuels. Reduces mass of wastes by 80 to 98%. Reduces volume of wastes by up to 98%. Reduces volume of wastes sent to landfills and associated trucking costs. Reactor operates at intense temperatures, insuring full thermal processing. Gas is scrubbed clean prior to final combustion. Waste heat can be recovered for space and water heating. Only emission source is engine exhaust. Significantly different approach to incineration. Fully automated, does not require human operator.

a) Disadvantages

May be maintenance intensive. Diesel engine emissions are a problem with new stringent EPA regulations. Co fueling is not economical. Waste water disposal may be a problem. Long term reliability must be proven.

5) Description of the Technology

Main purpose is to convert solid and liquid feedstocks into a synthetic fuel gas that burns similar to natural gas, but at a lower heating value. Gasifier is a rotating drum mounted on an incline. Feedstock is fed into the reactor from the downhill end. Reacting feedstock is used to seal the rotating drum, eliminating the need for mechanical seals and packing. Inert items such as metals, glass, soils, etc. pass thru the system quickly and discharge with the ash. Un-reacted feedstock tumbling inside the rotating drum scrubs the syngas clean of ash, tars, and aerosols. Tars are re-gasified when the feedstock reaches the reaction zone. Hot syngas passes through cool feedstock, heating and drying the feedstock. Moisture flashes off to slightly superheated steam and exits

the gasifier with the syngas. Steam is condensed back to a liquid within the scrubber. See Appendix A for further details.

Potential Products/Services

Military purposes, including waste to energy and hydrogen powered equipment. Combined heat and power for commercial and municipal buildings, schools, and colleges. Reduces landfill usage by processing municipal solid wastes at the transfer station. Sewage sludge processing. Clean coal. Ultra clean hydrogen combustion. Waste to liquid fuels. Waste to asphalt. Carbon sequestration. Distributed power generation.

Appendix A

Inclined Indirect Flaming Pyrolysis Rotary Gasifier Introduction

The Inclined Indirect Flaming Pyrolysis Rotary Gasifier (IIFPRG) converts any solid feedstock directly into synthetic fuel gas (syngas) that can be used similar to natural gas, but with cleaner combustion properties. The only byproduct of the process is ash. Any flammable solid feedstock that burns with an open flame can be processed, including, but not limited to wood, energy crops, construction and demolition wastes, agricultural wastes, and municipal solid wastes. The unique inclined rotational property of the gasifier allows inert non-flammable items to be mixed with the feedstock, avoiding the need to prepare and separate feedstock prior to processing. Inert items such as metals, glass, stone products, and soils simply pass thru the system and are discharge out of the gasifier with the ash. The gasifier is able to process solid feedstock without the need of pre-drying. The feedstock handling system uses a hydraulically powered piston to compact the wastes to drive feedstock into the gasifier and mechanically squeeze out excess water. The compressed feedstock acts as a material seal to prevent the entrance of air into the rotary gasifier at the feed point. The gasifier incorporates an inclined rotating drum that is mounted on an aggressive incline, allowing feedstock mixed with inert items to tumble downhill toward the reaction zone. Hot syngas must pass thru raw tumbling feedstock. Feedstock moisture is evaporated to steam that exits the gasifier with the syngas. Steam is condensed back to liquid water in the condenser portion of the scrubber. Hot syngas also directly contacts cool raw tumbling feedstock. Complex hydrocarbon aerosols, in the form of tars, condense on the cool raw and tumbling feedstock to scrub the gas clean as it exits the gasifier. The gasifier automatically cracks these tars as the feedstock is processed within the reaction zone. Flammable liquids, such as used engine oil and lubricants, can be mixed with the solid feedstock and gasified or injected separately. The gasifier consists of a totally enclosed rotating shell that is mounted on a substantial incline. All thermo-chemical reactions occur within the rotating shell. The design does not use any mechanical seals to prevent the leakage of air into the reactor. The reacting feedstock within the shell acts as the seal between stationary and rotating elements. The IIFPRG also has a non-rotating cylindrical chamber that encloses the rotating shell. Extra thermal energy is transferred into the rotating shell to dry wet feedstock. Thermal energy is provided preferably from engine exhaust or by cyclonically combusting a portion of the syngas within the annulus between the stationary and rotating shells. If the thermal energy required to vaporize feedstock moisture exceeds the available energy in the fixed carbon, a portion of the gas produced by the gasifier can be burned on the outside of the gasifier shell to provide additional thermal energy. The unique design of the IIFPRG allows the processing of dripping wet feedstock for the following reasons:

1. Excess water is removed using super-compression prior to feeding feedstock into the

gasifier.

2. Remaining moisture within the feedstock vaporizes to steam that is slightly superheated.

3. A non-rotating cylindrical chamber encloses the rotating shell allowing heat to transfer into the rotating shell to support the drying of wet feedstock. Thermal energy can be provided from engine exhaust or by combusting un-used syngas. Steam immediately mixes with the exiting syngas and leaves the gasifier. The design prevents steam escaping from feedstock moisture from reacting with the red hot burning char zone, saving about 65% of the thermal energy to superheat the steam to 1800 deg. F and thermo-chemically split the steam into additional hydrogen and carbon monoxide.

4. Steam that is slightly superheated, mixes with the syngas exiting the gasifier and is condensed to liquid water in the scrubbing system.

5. The recovered condensate (waste water) may be injected into the back of the IIFPRG to force the highly endothermic water-gas reaction, where water passing over hot carbon is split into flammable gas using the chemical reaction of $H2O + C \rightarrow H2 + CO$. Water also generates additional hydrogen gas by the slightly exothermic water gas shift reaction of $H2O + CO \rightarrow H2 + CO2$.

6. Remaining waste water is vaporized to steam using engine exhaust.
The flammable gas created by the IIFPRG must be quenched in temperature, cleaned of particulates and tar aerosols, and dried prior to feeding an engine. The scrubber is a unique design that quenches the temperature of the gas from high temperatures, power washes the gas multiple times using high pressure oil, pumps the gas using a unique jet arrangement, and then dries the gas to remove excess moisture all in one vessel. Depending on the application, high sulfur feedstock may require the removal of sulfur from the fuel gas using a dry powder fluid bed scrubber. The resulting syngas can be used in a manner similar to natural gas, but is most ideally suited to operate a stationary internal combustion engine driven generator. Other uses for the syngas include direct combustion for heating purposes, powering steam turbines, and fueling gas turbines. The IIFPRG is ideal to generate a syngas that is rich in hydrogen content when blown with oxygen instead of air. Hydrogen rich syngas is ideal for military purposes, such as propellants, fuel cells, and liquid fuel synthesis. Hydrogen fuels for combustion are of interest since the main combustion product is water vapor.

Main Features

1. Directly converts wet wastes into a flammable gas that can be used to fuel combustion equipment and engines.

2. Able to process dripping wet wastes by management of thermal energy.

3. Non-flammable feedstock does not need to be separated from flammable feedstock.

4. Gasifier is infinitely scalable.

5. The size of the feedstock handling system is proportionate to the gasifier size. Shredding feedstock on larger systems is not necessary, since the feedstock handling system will be able to handle large chunk sizes.

6. The rotating drum allows feedstock to continually tumble, allowing complete exposure to reaction surfaces.

7. Design allows tar to condense on un-reacted feedstock entering the gasifier, partially scrubbing the gas prior to exiting the gasifier.

8. Gasifier has no mechanical rotating seals. Reacted feedstock is used to seal between rotating and stationary elements.
9. The high heating valve of the gas is improved by removing in excess of 95% of the moisture in the syngas fuel prior to final combustion.

10. Operating on carbon rich feedstock, using oxygen as blowing gas, and injecting water into the combustion zone of the gasifier allows the generation of syngas that consists primarily of hydrogen gas and carbon dioxide. Carbon dioxide can be separated, resulting in a fuel gas consisting primarily of hydrogen for military purposes, fuel cells, liquid fuels, and ultra clean combustion processes.

Detailed Process Description Rotary Gasifier
Refer to drawing SUNY Cobleskill Center for Environmental Science and Technology Drawing # 010713-2-03.
The Inclined Indirect Flaming Pyrolysis Rotary Gasifier (IIFPRG) consists of a rotating cylindrical shell 201 that is mounted on incline angle 210. The preferred angle is about 22 degrees, but may be more or less depending on the geometry of the unit. Shell 201 rotates by a chain drive, but a variety of other driving methods may be used, including traction drive and bull gear. A stationary center tube 211 is mounted as a cantilever in the exact center of rotation of rotating shell 201 and is anchored at 212.
The inside diameter of rotating shell 201 is lined with refractory 207 for length 213. Feedstock 113 is pushed up stationary feed tube 202 and enters at 214. The area of the feed tube increases by at least 80% at 214 to allow feedstock to decompress and spread apart. Chunks of partially decompressed feedstock are pushed up stationary feed tube 202. Heat from hot exiting syngas 205 transfers into the incoming raw feedstock to dry and de-volatilize by indirect pyrolysis. Steam, gas, and feedstock discharge at the end of the feed pipe 202 at point 203. Feedstock 203 falls into rotating shell 201 and tumbles downhill 215 toward refractory lined section 207. Air enters the gasifier thru small gaps 216 and burns de-volatilized feedstock as fixed carbon with red hot burning coals 217. An abrupt line between raw feedstock and red hot burning coals forms at 218. High levels of heat from burning coals 217 directly contacts raw feedstock 219 tumbling downhill, causing flash gasification of feedstock on gasification interface line 218. Syngas 220 laden with tars must flow thru raw tumbling feedstock 219. Tar aerosols in syngas 220 condense on the raw tumbling feedstock 219, scrubbing the gas of aerosols and particulates prior to exiting the gasifier chamber at port 204. Tars and ash that become imbedded in the raw feedstock are reprocessed when the feedstock 219 tumbles down to gasification interface 218. Raw feedstock 219 is continually gasified to burning char coals 217, which are evenly dispersed around the entire annulus. Ash 224 discharges from the bottom spring plate 225, either thru the air entrance gaps or thru ash dump door 223. Slag, metals, glass, soil, etc. also withdraw from the gasifier thru ash dump door 223. Partially scrubbed syngas enters the gas withdrawal pipe 222 thru discharge port 204 and flows down eccentric annulus 205 between feed tube 202 and gas withdrawal tube 222. Gas exits the gasifier using pipe 206.
The energy value of the syngas produced can be improved by using oxygen enriched air or 100% oxygen as blowing gas instead of using air. The use of oxygen instead of air reduces the amount of nitrogen that enters the system with the air. Nitrogen dilutes the syngas and lowers the heating value. Refer to drawing 011513-2-01. Oxygen is injected

thru multiple tuyeres evenly spaced on flexible spring plate 301, which is mounted on the bottom end of gasifier 201. The flow of oxygen or enriched air 303, enters pipe 304 at pressure 305, and is evenly distributed around the annulus using injection tuyeres 302. The flow of blowing gas is based on pressure 305 and is varied until the pressure on the opposite side of spring plate 301 is slightly positive on the inside surface of spring plate 301 within the gasifier.

David Waage
Research Foundation of SUNY
SUNY Cobleskill
Date: 2-20-13

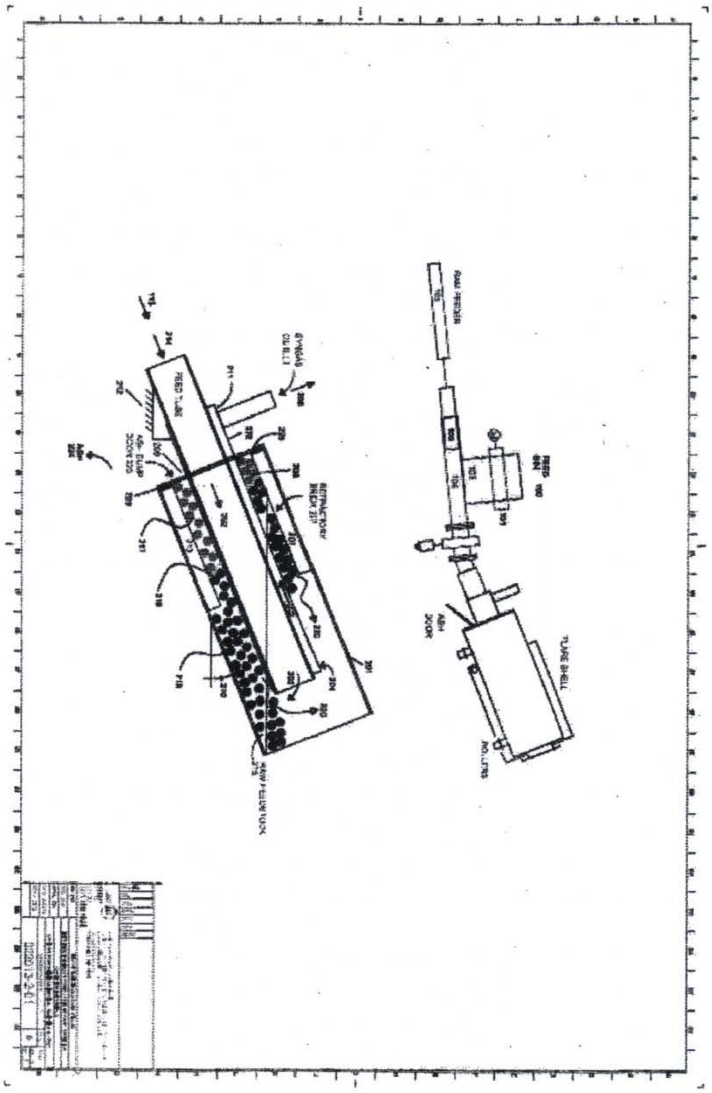

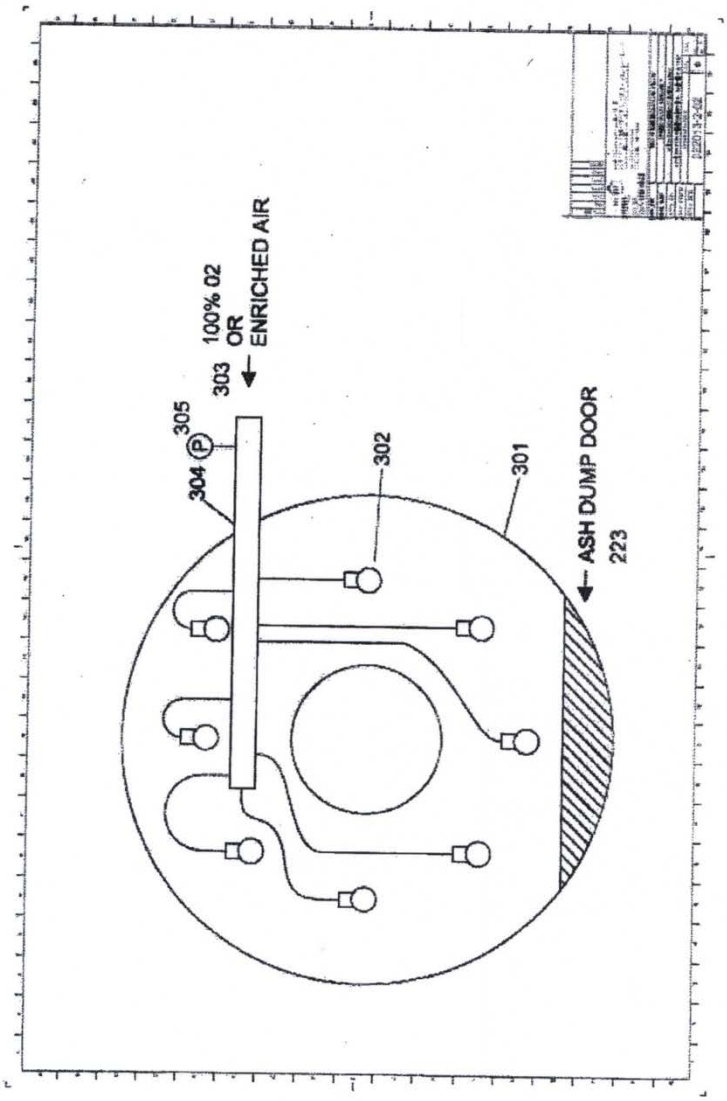
100% 02
OR
ENRICHED AIR
303
305
304
302
301
ASH DUMP DOOR
223

RECORD OF INVENTION
(AMC-R 825-2)
(To be attached as cover sheet to detailed description of the invention)

1. NAME OF INVENTOR(S)	2. HOME ADDRESS OF INVENTOR(S) WITH ZIP CODE	3. E-mail address + work phone number
David Waage	SUNY Cobleskill	5182555312
Gary Collins	SUNY Cobleskill	5182555312
Philip Darcy	Benet Labs	5182664534
Paul Redner (more inventors listed below under #6)	ARDEC	

4. Invention Title: Inclined Indirect Flaming Pyrolysis Rotary Gasifier (IIFPRG)

5. Invention History:	Date	Place of Action or Name of Persons
(a) Conception of Invention	2/20/13	W15QKN-08-1-0001 SUNY Cobleskill
(b) First Sketch or drawing		
(c) First written description		
(d) Disclosure to others		
(e) Completion of model		
(f) Completion of full-scale item		
(g) First test of inventive item		

6. Individuals having first hand knowledge of any of the features of the invention history:

NAME	ADDRESS	FEATURE
COL R. Lachance (Also an Inventor)	USMA	all
Steve Cosper (Also an Inventor)	ERDC CERL	
	L	1

7. Results of test (check block that applies):

Successful ☐ Marginally Successful ☐ Unsuccessful ☐ No Tests Run ☒

8. Repositories of Invention Data:

Document Title	Location

AMC FORM 1255-R-E JUL 94

9. Invention Publication (Disclosure Outside of Government):	
Publication Media	Date of Publication
N/A	

10. Known Related Patents and Applications (if applicable):	
Patent or Application	Patent or Serial Number (If known)
SUNY RF	1901-370

11. THE ATTACHED INVENTION DISCLOSURE HAS BEEN READ AND UNDERSTOOD BY TWO WITNESS WHO HAVE SIGNED A STATEMENT TO THIS EFFECT AT THE END THEREOF.

Date: 8-5-13	Inventor Signature:
Date: 6/11/13	Inventor Signature:
Date: 8-5-13	Inventor Signature:
Date: 6/11/13	Inventor Signature: Paul Rodner
Date: 6/11/13	Inventor Signature:

WITNESS SIGNATURES and DATE: 06/11/13

(one more witness) 7/8/13

12. Jurisdictional Patent Activity:

(Name) (Date of Receipt)

AMC FORM 1255-R-E JUL 94

Appendix E Analysis of Syngas and Exhaust

NEW YORK STATE OF OPPORTUNITY. | Department of Health

ANDREW M. CUOMO
Governor

HOWARD A. ZUCKER, M.D., J.D.
Commissioner

SALLY DRESLIN, M.S., R.N.
Executive Deputy Commissioner

Gasification of Forward Operating Base Wastes

Strategic Environmental Research and Development Plan – US Army Corps of Engineers

State University of New York Research Foundation, Cobleskill, NY

Wadsworth Center for Laboratories and Research

Analysis of Syngas and Diesel Exhaust Gas Samples Summary

Empire State Plaza, Corning Tower, Albany, NY 12237 | health.ny.gov

The following is a summary of the analysis of whole air gaseous samples submitted to the New York State Department of Health Wadsworth Center in support of a research project investigating the conversion of combustible waste into a flammable synthetic gas (Syngas) suitable for the operation of diesel engines.

Sample Collection: The Syngas and Diesel exhaust gas samples were collected in certified pre-cleaned 6-liter whole air Summa® canister, (Fig.1) supplied by the Wadsworth Center.

Fig 1. Summa canister for Syngas sampling

Upon sample receipt, the canisters were allowed to sit overnight to equilibrate before making appropriate sample dilutions. Dilutions were made directly, canister to canister, by removing known volumes from the source canister to the dilution canister through the use of a critical orifice flow restrictor fitting. Fig 2. The diluted samples were allowed to stand overnight at room temperature to equilibrate before being analyzed.

Fig 2. Canister dilution with critical orifice fitting

Sample Analysis: The canister samples were analyzed using whole air instrument #1, following USEPA TO-15 methodologies. The system consists of an Agilent 6890^{+}/5975B GC/MSD (fig 3) connected to an Entech 7150/7500A/7016C pre-concentrator, autosampler inlet system. (fig 4 & fig 5).

Fig 3. Agilent 6890+/5975B GC/MSD

Fig.4 Entech 7150/7500A sample pre-concentrator/inlet system

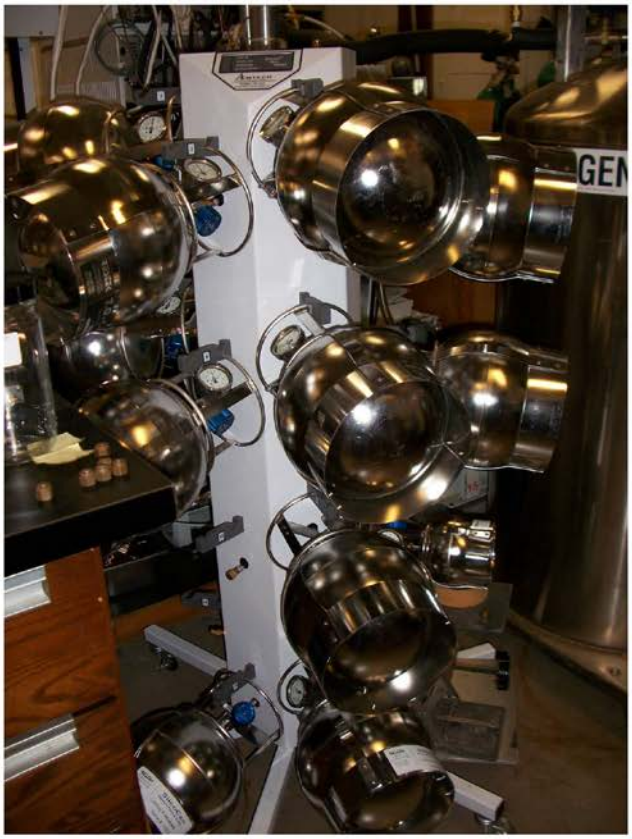

Fig 5. Entech 7016C canister autosampler

The canisters were attached to a numbered sampling position on the 7016C autosampler via a Swagelok fitting. A known volume of the sample was accurately and reproducibly removed from the canister through a closed loop system and concentrated at the cryogenically controlled trap. After equilibration, the trap was heated to move the sample onto the chromatographic column, leading to the mass selective detector.

The total ion chromatograms are located on pages 39 to 50. The results are listed on the following pages.

Data Analysis: Analysis of the GC/MSD data was accomplished using Agilent Environmental MSD Chemstation build 75, NIST Mass Spectral 2002 database and NIST AMDIS v2.1. The results calculated for the target analytes are based on the total area counts for a specific mass at a precise retention time as compared to the reference standard analyzed under the same conditions at different concentrations.

Target analyte results for the SynGas Long Term Mix

	SynGas_Long Term Mix 1			SynGas_Long Term Mix 2	
	Analyte	**ppmV**		**Analyte**	**ppmV**
2	Propene	45086.40	**2**	Propene	17847.36
7	1,3-Butadiene	5520.96	**7**	1,3-Butadiene	1645.44
12	ISOPRENE	12730.56	**12**	ISOPRENE	3312.96
14	ACETONE	1661.76	**14**	ACETONE	2001.60
15	n-HEXANE	188.16	**15**	n-HEXANE	66.24
21	METHYL ETHYL KETONE	454.08	**21**	METHYL ETHYL KETONE	512.64
27	CYCLOHEXANE	0.00	**27**	CYCLOHEXANE	15.36
31	n-HEPTANE	82.56	**31**	n-HEPTANE	92.16
33	BENZENE	17110.08	**33**	BENZENE	8544.00
35	METHYLCYCLOHEXANE	0.00	**35**	METHYLCYCLOHEXANE	7008.00
42	TOLUENE	3370.56	**42**	TOLUENE	2724.48
51	n-NONANE	256.32	**51**	n-NONANE	272.64
53	ETHYLBENZENE	205.44	**53**	ETHYLBENZENE	800.64
54	M,P-XYLENE	247.68	**54**	M,P-XYLENE	337.92
55	O-XYLENE	54.72	**55**	O-XYLENE	125.76
56	STYRENE	207.36	**56**	STYRENE	2669.76
59	ISOPROPYLBENZENE	25.92	**59**	ISOPROPYLBENZENE	238.08
61	n-DECANE	116.16	**61**	n-DECANE	365.76
62	n-PROPYLBENZENE	72.96	**62**	n-PROPYLBENZENE	356.16
63	1,3,5-TRIMETHYLBENZENE	3.84	**63**	1,3,5-TRIMETHYLBENZENE	21.12
65	1,2,4-TRIMETHYLBENZENE	4.80	**65**	1,2,4-TRIMETHYLBENZENE	51.84
67	d-LIMONENE	65.28	**67**	d-LIMONENE	560.64
68	p-ISOPROPYLTOLUENE	65.28	**68**	p-ISOPROPYLTOLUENE	84.48
70	1,2,3-TRIMETHYLBENZENE	20.16	**70**	1,2,3-TRIMETHYLBENZENE	126.72
72	n-UNDECANE	30.72	**72**	n-UNDECANE	170.88
75	n-DODECANE	7.68	**75**	n-DODECANE	41.28
78	Naphthalene	5.76	**78**	Naphthalene	6.72

Target analyte results for the SynGas_100% Construction Mix

	SynGas_100% Construction Mix 1			SynGas_100% Construction Mix 2	
	Analyte	**ppmV**		**Analyte**	**ppmV**
2	Propene	24061.44	**2**	Propene	8682.24
7	1,3-Butadiene	3793.92	**7**	1,3-Butadiene	1085.76
12	ISOPRENE	5611.20	**12**	ISOPRENE	1588.80
14	ACETONE	6401.28	**14**	ACETONE	2314.56
15	n-HEXANE	305.28	**15**	n-HEXANE	56.64
21	METHYL ETHYL KETONE	2133.12	**21**	METHYL ETHYL KETONE	502.08
27	CYCLOHEXANE	18.24	**27**	CYCLOHEXANE	0.00
31	n-HEPTANE	224.64	**31**	n-HEPTANE	48.96
33	BENZENE	11040.96	**33**	BENZENE	4993.92
35	METHYLCYCLOHEXANE	195.84	**35**	METHYLCYCLOHEXANE	74.88
42	TOLUENE	3431.04	**42**	TOLUENE	2048.64
51	n-NONANE	1550.40	**51**	n-NONANE	725.76
53	ETHYLBENZENE	526.08	**53**	ETHYLBENZENE	589.44
54	M,P-XYLENE	663.36	**54**	M,P-XYLENE	386.88
55	O-XYLENE	258.24	**55**	O-XYLENE	154.56
56	STYRENE	776.64	**56**	STYRENE	1738.56
59	ISOPROPYLBENZENE	340.80	**59**	ISOPROPYLBENZENE	215.04
61	n-DECANE	2269.44	**61**	n-DECANE	500.16
62	n-PROPYLBENZENE	1057.92	**62**	n-PROPYLBENZENE	24.00
63	1,3,5-TRIMETHYLBENZENE	117.12	**63**	1,3,5-TRIMETHYLBENZENE	35.52
65	1,2,4-TRIMETHYLBENZENE	350.40	**65**	1,2,4-TRIMETHYLBENZENE	92.16
67	d-LIMONENE	0.00	**67**	d-LIMONENE	511.68
68	p-ISOPROPYLTOLUENE	503.04	**68**	p-ISOPROPYLTOLUENE	139.20
70	1,2,3-TRIMETHYLBENZENE	834.24	**70**	1,2,3-TRIMETHYLBENZENE	218.88
72	n-UNDECANE	766.08	**72**	n-UNDECANE	509.76
75	n-DODECANE	104.64	**75**	n-DODECANE	87.36
78	Naphthalene	59.52	**78**	Naphthalene	17.28

Target analyte results for the SynGas 50% Food Mix

	SynGas_50% Food Mix 1			SynGas_50% Food Mix 2	
	Analyte	**ppmV**		**Analyte**	**ppmV**
2	Propene	25226.88	**2**	Propene	30874.56
7	1,3-Butadiene	4177.92	**7**	1,3-Butadiene	5475.84
12	ISOPRENE	7556.16	**12**	ISOPRENE	16854.72
14	ACETONE	2443.20	**14**	ACETONE	2334.72
15	n-HEXANE	60.48	**15**	n-HEXANE	212.16
21	METHYL ETHYL KETONE	774.72	**21**	METHYL ETHYL KETONE	554.88
27	CYCLOHEXANE	0.00	**27**	CYCLOHEXANE	0.00
31	n-HEPTANE	63.36	**31**	n-HEPTANE	157.44
33	BENZENE	17493.12	**33**	BENZENE	10201.92
35	METHYLCYCLOHEXANE	0.00	**35**	METHYLCYCLOHEXANE	225.60
42	TOLUENE	4141.44	**42**	TOLUENE	3555.84
51	n-NONANE	842.88	**51**	n-NONANE	557.76
53	ETHYLBENZENE	596.16	**53**	ETHYLBENZENE	1767.36
54	M,P-XYLENE	601.92	**54**	M,P-XYLENE	431.04
55	O-XYLENE	218.88	**55**	O-XYLENE	158.40
56	STYRENE	1081.92	**56**	STYRENE	5640.96
59	ISOPROPYLBENZENE	180.48	**59**	ISOPROPYLBENZENE	719.04
61	n-DECANE	1764.48	**61**	n-DECANE	546.24
62	n-PROPYLBENZENE	642.24	**62**	n-PROPYLBENZENE	650.88
63	1,3,5-TRIMETHYLBENZENE	43.20	**63**	1,3,5-TRIMETHYLBENZENE	20.16
65	1,2,4-TRIMETHYLBENZENE	112.32	**65**	1,2,4-TRIMETHYLBENZENE	50.88
67	d-LIMONENE	680.64	**67**	d-LIMONENE	1723.20
68	p-ISOPROPYLTOLUENE	165.12	**68**	p-ISOPROPYLTOLUENE	150.72
70	1,2,3-TRIMETHYLBENZENE	298.56	**70**	1,2,3-TRIMETHYLBENZENE	156.48
72	n-UNDECANE	1135.68	**72**	n-UNDECANE	332.16
75	n-DODECANE	160.32	**75**	n-DODECANE	63.36
78	Naphthalene	36.48	**78**	Naphthalene	22.08

Target analyte results for the SynGas 33% POL Mix

	SynGas_33% POL Mix 1			SynGas_33% POL Mix 2	
	Analyte	**ppmV**		**Analyte**	**ppmV**
2	Propene	12192.96	**2**	Propene	31661.76
7	1,3-Butadiene	2664.96	**7**	1,3-Butadiene	8566.08
12	ISOPRENE	23710.08	**12**	ISOPRENE	27994.56
14	ACETONE	2446.08	**14**	ACETONE	2560.32
15	n-HEXANE	45.12	**15**	n-HEXANE	128.64
21	METHYL ETHYL KETONE	685.44	**21**	METHYL ETHYL KETONE	856.32
27	CYCLOHEXANE	35.52	**27**	CYCLOHEXANE	4416.00
31	n-HEPTANE	72.00	**31**	n-HEPTANE	95.04
33	BENZENE	7187.52	**33**	BENZENE	14492.16
35	METHYLCYCLOHEXANE	0.00	**35**	METHYLCYCLOHEXANE	0.00
42	TOLUENE	2846.40	**42**	TOLUENE	4820.16
51	n-NONANE	310.08	**51**	n-NONANE	951.36
53	ETHYLBENZENE	515.52	**53**	ETHYLBENZENE	1015.68
54	M,P-XYLENE	431.04	**54**	M,P-XYLENE	413.76
55	O-XYLENE	237.12	**55**	O-XYLENE	194.88
56	STYRENE	1037.76	**56**	STYRENE	3101.76
59	ISOPROPYLBENZENE	225.60	**59**	ISOPROPYLBENZENE	443.52
61	n-DECANE	1344.00	**61**	n-DECANE	878.40
62	n-PROPYLBENZENE	6144.00	**62**	n-PROPYLBENZENE	549.12
63	1,3,5-TRIMETHYLBENZENE	48.96	**63**	1,3,5-TRIMETHYLBENZENE	21.12
65	1,2,4-TRIMETHYLBENZENE	139.20	**65**	1,2,4-TRIMETHYLBENZENE	55.68
67	d-LIMONENE	934.08	**67**	d-LIMONENE	1637.76
68	p-ISOPROPYLTOLUENE	197.76	**68**	p-ISOPROPYLTOLUENE	99.84
70	1,2,3-TRIMETHYLBENZENE	317.76	**70**	1,2,3-TRIMETHYLBENZENE	161.28
72	n-UNDECANE	891.84	**72**	n-UNDECANE	609.60
75	n-DODECANE	107.52	**75**	n-DODECANE	98.88
78	Naphthalene	26.88	**78**	Naphthalene	24.00

Target analyte results for the SynGas 40% Tire Mix

	SynGas_40% Tire Mix 1			SynGas_40% Tire Mix 2	
	Analyte	**ppmV**		**Analyte**	**ppmV**
2	Propene	16114.56	**2**	Propene	12248.64
7	1,3-Butadiene	4106.88	**7**	1,3-Butadiene	3944.64
12	ISOPRENE	52316.16	**12**	ISOPRENE	57312.00
14	ACETONE	1848.96	**14**	ACETONE	57361.92
15	n-HEXANE	444.48	**15**	n-HEXANE	106.56
21	METHYL ETHYL KETONE	480.96	**21**	METHYL ETHYL KETONE	430.08
27	CYCLOHEXANE	152.64	**27**	CYCLOHEXANE	0.00
31	n-HEPTANE	88.32	**31**	n-HEPTANE	120.00
33	BENZENE	16025.28	**33**	BENZENE	11876.16
35	METHYLCYCLOHEXANE	702.72	**35**	METHYLCYCLOHEXANE	202.56
42	TOLUENE	7536.96	**42**	TOLUENE	5771.52
51	n-NONANE	1365.12	**51**	n-NONANE	639.36
53	ETHYLBENZENE	2199.36	**53**	ETHYLBENZENE	2071.68
54	M,P-XYLENE	555.84	**54**	M,P-XYLENE	568.32
55	O-XYLENE	206.40	**55**	O-XYLENE	192.96
56	STYRENE	6240.00	**56**	STYRENE	6325.44
59	ISOPROPYLBENZENE	4992.00	**59**	ISOPROPYLBENZENE	589.44
61	n-DECANE	918.72	**61**	n-DECANE	1064.64
62	n-PROPYLBENZENE	559.68	**62**	n-PROPYLBENZENE	617.28
63	1,3,5-TRIMETHYLBENZENE	29.76	**63**	1,3,5-TRIMETHYLBENZENE	30.72
65	1,2,4-TRIMETHYLBENZENE	85.44	**65**	1,2,4-TRIMETHYLBENZENE	74.88
67	d-LIMONENE	1108.80	**67**	d-LIMONENE	935.04
68	p-ISOPROPYLTOLUENE	282.24	**68**	p-ISOPROPYLTOLUENE	132.48
70	1,2,3-TRIMETHYLBENZENE	212.16	**70**	1,2,3-TRIMETHYLBENZENE	187.20
72	n-UNDECANE	814.08	**72**	n-UNDECANE	698.88
75	n-DODECANE	141.12	**75**	n-DODECANE	101.76
78	Naphthalene	51.84	**78**	Naphthalene	32.64

Target analyte results for the SynGas 50% Plastics Mix

	SynGas_50% Plastics Mix	
	Analyte	**ppmV**
2	Propene	40676.16
7	1,3-Butadiene	6714.24
12	ISOPRENE	17664.00
14	ACETONE	2304.00
15	n-HEXANE	158.40
21	METHYL ETHYL KETONE	260.16
27	CYCLOHEXANE	0.00
31	n-HEPTANE	107.52
33	BENZENE	16671.36
35	METHYLCYCLOHEXANE	284.16
42	TOLUENE	2063.04
51	n-NONANE	275.52
53	ETHYLBENZENE	148.80
54	M,P-XYLENE	157.44
55	O-XYLENE	49.92
56	STYRENE	165.12
59	ISOPROPYLBENZENE	52.80
61	n-DECANE	457.92
62	n-PROPYLBENZENE	131.52
63	1,3,5-TRIMETHYLBENZENE	11.52
65	1,2,4-TRIMETHYLBENZENE	29.76
67	d-LIMONENE	31.68
68	p-ISOPROPYLTOLUENE	45.12
70	1,2,3-TRIMETHYLBENZENE	82.56
72	n-UNDECANE	166.08
75	n-DODECANE	65.28
78	Naphthalene	21.12

Target Analyte Results for the Diesel Exhaust Samples

Target Analyte Results for the Diesel Exhaust Long Term Mix

	SynGas_Exhaust_Long Term Mix 1			SynGas_Exhaust_Long Term Mix 2	
	Analyte	**ppbV**		**Analyte**	**ppbV**
2	Propene	4425.60	**2**	Propene	7214.40
7	1,3-Butadiene	<10.	**7**	1,3-Butadiene	<10.
12	ISOPRENE	<10.	**12**	ISOPRENE	<10.
14	ACETONE	993.60	**14**	ACETONE	1797.60
15	n-HEXANE	74.40	**15**	n-HEXANE	127.20
21	METHYL ETHYL KETONE	<10.	**21**	METHYL ETHYL KETONE	256.80
27	CYCLOHEXANE	<10.	**27**	CYCLOHEXANE	<10.
31	n-HEPTANE	<10.	**31**	n-HEPTANE	33.60
33	BENZENE	13166.40	**33**	BENZENE	14188.80
35	METHYLCYCLOHEXANE	57.60	**35**	METHYLCYCLOHEXANE	117.60
42	TOLUENE	856.80	**42**	TOLUENE	1207.20
51	n-NONANE	57.60	**51**	n-NONANE	542.40
53	ETHYLBENZENE	158.40	**53**	ETHYLBENZENE	386.40
54	M,P-XYLENE	86.40	**54**	M,P-XYLENE	220.80
55	O-XYLENE	33.60	**55**	O-XYLENE	91.20
56	STYRENE	427.20	**56**	STYRENE	244.80
59	ISOPROPYLBENZENE	103.20	**59**	ISOPROPYLBENZENE	184.80
61	n-DECANE	218.40	**61**	n-DECANE	556.80
62	n-PROPYLBENZENE	220.80	**62**	n-PROPYLBENZENE	278.40
63	1,3,5-TRIMETHYLBENZENE	26.40	**63**	1,3,5-TRIMETHYLBENZENE	28.80
65	1,2,4-TRIMETHYLBENZENE	40.80	**65**	1,2,4-TRIMETHYLBENZENE	57.60
67	d-LIMONENE	<10.	**67**	d-LIMONENE	<10.
68	p-ISOPROPYLTOLUENE	607.20	**68**	p-ISOPROPYLTOLUENE	103.20
70	1,2,3-TRIMETHYLBENZENE	292.80	**70**	1,2,3-TRIMETHYLBENZENE	180.00
72	n-UNDECANE	331.20	**72**	n-UNDECANE	403.20
75	n-DODECANE	115.20	**75**	n-DODECANE	112.80
78	Naphthalene	38.40	**78**	Naphthalene	38.40

Target Analyte Results for the Diesel Exhaust 100% Construction Mix

	SynGas_Exhaust_100% Construction Mix 1			SynGas_Exhaust_100% Construction Mix 2	
	Analyte	**ppbV**		**Analyte**	**ppbV**
2	Propene	1716.00	**2**	Propene	6184.80
7	1,3-Butadiene	<10.	**7**	1,3-Butadiene	<10.
12	ISOPRENE	<10.	**12**	ISOPRENE	<10.
14	ACETONE	806.40	**14**	ACETONE	2479.20
15	n-HEXANE	38.40	**15**	n-HEXANE	36.00
21	METHYL ETHYL KETONE	146.40	**21**	METHYL ETHYL KETONE	290.40
27	CYCLOHEXANE	<10.	**27**	CYCLOHEXANE	<10.
31	n-HEPTANE	<10.	**31**	n-HEPTANE	26.40
33	BENZENE	2668.80	**33**	BENZENE	16514.40
35	METHYLCYCLOHEXANE	<10.	**35**	METHYLCYCLOHEXANE	110.40
42	TOLUENE	468.00	**42**	TOLUENE	1039.20
51	n-NONANE	163.20	**51**	n-NONANE	580.80
53	ETHYLBENZENE	148.80	**53**	ETHYLBENZENE	141.60
54	M,P-XYLENE	64.80	**54**	M,P-XYLENE	163.20
55	O-XYLENE	33.60	**55**	O-XYLENE	76.80
56	STYRENE	475.20	**56**	STYRENE	206.40
59	ISOPROPYLBENZENE	84.00	**59**	ISOPROPYLBENZENE	91.20
61	n-DECANE	177.60	**61**	n-DECANE	616.80
62	n-PROPYLBENZENE	139.20	**62**	n-PROPYLBENZENE	256.80
63	1,3,5-TRIMETHYLBENZENE	12.00	**63**	1,3,5-TRIMETHYLBENZENE	38.40
65	1,2,4-TRIMETHYLBENZENE	33.60	**65**	1,2,4-TRIMETHYLBENZENE	69.60
67	d-LIMONENE	<10.	**67**	d-LIMONENE	<10.
68	p-ISOPROPYLTOLUENE	50.40	**68**	p-ISOPROPYLTOLUENE	127.20
70	1,2,3-TRIMETHYLBENZENE	98.40	**70**	1,2,3-TRIMETHYLBENZENE	228.00
72	n-UNDECANE	105.60	**72**	n-UNDECANE	616.80
75	n-DODECANE	55.20	**75**	n-DODECANE	124.80
78	Naphthalene	45.60	**78**	Naphthalene	93.60

Target Analyte Results for the Diesel Exhaust 50% Food Mix

	SynGas_Exhaust_50% Food Mix 1			SynGas_Exhaust_50% Food Mix 2	
	Analyte	**ppbV**		**Analyte**	**ppbV**
2	Propene	5642.40	**2**	Propene	2155.20
7	1,3-Butadiene	<10.	**7**	1,3-Butadiene	<10.
12	ISOPRENE	<10.	**12**	ISOPRENE	<10.
14	ACETONE	1641.60	**14**	ACETONE	415.20
15	n-HEXANE	91.20	**15**	n-HEXANE	<10.
21	METHYL ETHYL KETONE	141.60	**21**	METHYL ETHYL KETONE	<10.
27	CYCLOHEXANE	<10.	**27**	CYCLOHEXANE	<10.
31	n-HEPTANE	26.40	**31**	n-HEPTANE	7.20
33	BENZENE	13024.80	**33**	BENZENE	4024.80
35	METHYLCYCLOHEXANE	<10.	**35**	METHYLCYCLOHEXANE	<10.
42	TOLUENE	837.60	**42**	TOLUENE	1070.40
51	n-NONANE	105.60	**51**	n-NONANE	297.60
53	ETHYLBENZENE	211.20	**53**	ETHYLBENZENE	1946.40
54	M,P-XYLENE	146.40	**54**	M,P-XYLENE	580.80
55	O-XYLENE	52.80	**55**	O-XYLENE	256.80
56	STYRENE	429.60	**56**	STYRENE	8707.20
59	ISOPROPYLBENZENE	93.60	**59**	ISOPROPYLBENZENE	1677.60
61	n-DECANE	657.60	**61**	n-DECANE	2258.40
62	n-PROPYLBENZENE	182.40	**62**	n-PROPYLBENZENE	1084.80
63	1,3,5-TRIMETHYLBENZENE	21.60	**63**	1,3,5-TRIMETHYLBENZENE	81.60
65	1,2,4-TRIMETHYLBENZENE	40.80	**65**	1,2,4-TRIMETHYLBENZENE	206.40
67	d-LIMONENE	<10.	**67**	d-LIMONENE	9204.00
68	p-ISOPROPYLTOLUENE	<10.	**68**	p-ISOPROPYLTOLUENE	2529.60
70	1,2,3-TRIMETHYLBENZENE	127.20	**70**	1,2,3-TRIMETHYLBENZENE	777.60
72	n-UNDECANE	729.60	**72**	n-UNDECANE	3026.40
75	n-DODECANE	295.20	**75**	n-DODECANE	847.20
78	Naphthalene	26.40	**78**	Naphthalene	376.80

Target Analyte Results for the Diesel Exhaust 33% POL Mix

	SynGas_Exhaust_33% POL Mix 1			SynGas_Exhaust_33% POL Mix 2	
	Analyte	**ppbV**		**Analyte**	**ppbV**
2	Propene	16970.40	**2**	Propene	5380.80
7	1,3-Butadiene	<10.	**7**	1,3-Butadiene	<10.
12	ISOPRENE	<10.	**12**	ISOPRENE	<10.
14	ACETONE	5882.40	**14**	ACETONE	1137.60
15	n-HEXANE	81.60	**15**	n-HEXANE	12.00
21	METHYL ETHYL KETONE	751.20	**21**	METHYL ETHYL KETONE	103.20
27	CYCLOHEXANE	<10.	**27**	CYCLOHEXANE	<10.
31	n-HEPTANE	74.40	**31**	n-HEPTANE	12.00
33	BENZENE	24357.60	**33**	BENZENE	13812.00
35	METHYLCYCLOHEXANE	328.80	**35**	METHYLCYCLOHEXANE	<10.
42	TOLUENE	2978.40	**42**	TOLUENE	1108.80
51	n-NONANE	1620.00	**51**	n-NONANE	350.40
53	ETHYLBENZENE	518.40	**53**	ETHYLBENZENE	290.40
54	M,P-XYLENE	513.60	**54**	M,P-XYLENE	132.00
55	O-XYLENE	343.20	**55**	O-XYLENE	76.80
56	STYRENE	434.40	**56**	STYRENE	194.40
59	ISOPROPYLBENZENE	434.40	**59**	ISOPROPYLBENZENE	151.20
61	n-DECANE	3055.20	**61**	n-DECANE	508.80
62	n-PROPYLBENZENE	1192.80	**62**	n-PROPYLBENZENE	228.00
63	1,3,5-TRIMETHYLBENZENE	136.80	**63**	1,3,5-TRIMETHYLBENZENE	16.80
65	1,2,4-TRIMETHYLBENZENE	324.00	**65**	1,2,4-TRIMETHYLBENZENE	26.40
67	d-LIMONENE	<10.	**67**	d-LIMONENE	<10.
68	p-ISOPROPYLTOLUENE	60.00	**68**	p-ISOPROPYLTOLUENE	84.00
70	1,2,3-TRIMETHYLBENZENE	1094.40	**70**	1,2,3-TRIMETHYLBENZENE	134.40
72	n-UNDECANE	3806.40	**72**	n-UNDECANE	532.80
75	n-DODECANE	1454.40	**75**	n-DODECANE	170.40
78	Naphthalene	381.60	**78**	Naphthalene	38.40

Target Analyte Results for the Diesel Exhaust 40% Tire Mix

	SynGas_Exhaust_40% Tire Mix 1			SynGas_Exhaust_40% Tire Mix 2	
	Analyte	**ppbV**		**Analyte**	**ppbV**
2	Propene	7576.80	**2**	Propene	3837.60
7	1,3-Butadiene	<10.	**7**	1,3-Butadiene	<10.
12	ISOPRENE	<10.	**12**	ISOPRENE	<10.
14	ACETONE	2006.40	**14**	ACETONE	1221.60
15	n-HEXANE	151.20	**15**	n-HEXANE	67.20
21	METHYL ETHYL KETONE	175.20	**21**	METHYL ETHYL KETONE	60.00
27	CYCLOHEXANE	0.00	**27**	CYCLOHEXANE	<10.
31	n-HEPTANE	19.20	**31**	n-HEPTANE	<10.
33	BENZENE	16910.40	**33**	BENZENE	10231.20
35	METHYLCYCLOHEXANE	146.40	**35**	METHYLCYCLOHEXANE	<10.
42	TOLUENE	2356.80	**42**	TOLUENE	1156.80
51	n-NONANE	501.60	**51**	n-NONANE	249.60
53	ETHYLBENZENE	631.20	**53**	ETHYLBENZENE	345.60
54	M,P-XYLENE	218.40	**54**	M,P-XYLENE	110.40
55	O-XYLENE	108.00	**55**	O-XYLENE	50.40
56	STYRENE	595.20	**56**	STYRENE	139.20
59	ISOPROPYLBENZENE	223.20	**59**	ISOPROPYLBENZENE	148.80
61	n-DECANE	717.60	**61**	n-DECANE	199.20
62	n-PROPYLBENZENE	304.80	**62**	n-PROPYLBENZENE	122.40
63	1,3,5-TRIMETHYLBENZENE	28.80	**63**	1,3,5-TRIMETHYLBENZENE	<10.
65	1,2,4-TRIMETHYLBENZENE	81.60	**65**	1,2,4-TRIMETHYLBENZENE	16.80
67	d-LIMONENE	<10.	**67**	d-LIMONENE	22154.40
68	p-ISOPROPYLTOLUENE	141.60	**68**	p-ISOPROPYLTOLUENE	26.40
70	1,2,3-TRIMETHYLBENZENE	252.00	**70**	1,2,3-TRIMETHYLBENZENE	62.40
72	n-UNDECANE	633.60	**72**	n-UNDECANE	<10.
75	n-DODECANE	122.40	**75**	n-DODECANE	<10.
78	Naphthalene	55.20	**78**	Naphthalene	14.40

Target Analyte Results for the Diesel Exhaust 50% Plastics Mix

	SynGas_Exhaust_50% Plastics Mix	
	Analyte	**ppbV**
2	Propene	6393.60
7	1,3-Butadiene	<10.
12	ISOPRENE	<10.
14	ACETONE	1034.40
15	n-HEXANE	124.80
21	METHYL ETHYL KETONE	84.00
27	CYCLOHEXANE	12.00
31	n-HEPTANE	33.60
33	BENZENE	12938.40
35	METHYLCYCLOHEXANE	<10.
42	TOLUENE	828.00
51	n-NONANE	276.00
53	ETHYLBENZENE	182.40
54	M,P-XYLENE	76.80
55	O-XYLENE	28.80
56	STYRENE	458.40
59	ISOPROPYLBENZENE	76.80
61	n-DECANE	292.80
62	n-PROPYLBENZENE	98.40
63	1,3,5-TRIMETHYLBENZENE	9.60
65	1,2,4-TRIMETHYLBENZENE	21.60
67	d-LIMONENE	<10.
68	p-ISOPROPYLTOLUENE	<10.
70	1,2,3-TRIMETHYLBENZENE	64.80
72	n-UNDECANE	338.40
75	n-DODECANE	105.60

78	Naphthalene	12.00

Two commercial diesel fuel samples were run through the 60kW diesel engine collecting the exhaust for use as a reference to the Syngas exhaust samples. Target analyte results listed below:

Target Analyte Results for the Diesel Fuel Exhaust Reference

	SynGas_Diesel_Exhaust_Ref_1			SynGas_Diesel_Exhaust_Ref_2	
	Analyte	**ppbV**		**Analyte**	**ppbV**
2	Propene	<10.	**2**	Propene	<10.
7	1,3-Butadiene	<10.	**7**	1,3-Butadiene	<10.
9	ISOPRENE	<10.	**9**	ISOPRENE	<10.
11	ACETONE	<10.	**11**	ACETONE	<10.
15	n-HEXANE	<10.	**15**	n-HEXANE	<10.
18	METHYL ETHYL KETONE	<10.	**18**	METHYL ETHYL KETONE	<10.
23	CYCLOHEXANE	<10.	**23**	CYCLOHEXANE	<10.
27	n-HEPTANE	<10.	**27**	n-HEPTANE	<10.
29	BENZENE	202.28	**29**	BENZENE	194.56
31	METHYLCYCLOHEXANE	29.08	**31**	METHYLCYCLOHEXANE	21.88
37	TOLUENE	89.29	**37**	TOLUENE	68.76
45	n-NONANE	134.92	**45**	n-NONANE	89.52
47	ETHYLBENZENE	<10.	**47**	ETHYLBENZENE	32.12
48	M,P-XYLENE	44.92	**48**	M,P-XYLENE	<10.
49	O-XYLENE	24.84	**49**	O-XYLENE	<10.
50	STYRENE	<10.	**50**	STYRENE	56.48
52	ISOPROPYLBENZENE	<10.	**52**	ISOPROPYLBENZENE	20.36
54	n-DECANE	214.04	**54**	n-DECANE	123.48
55	n-PROPYLBENZENE	61.28	**55**	n-PROPYLBENZENE	45.84
56	1,3,5-TRIMETHYLBENZENE	<10.	**56**	1,3,5-TRIMETHYLBENZENE	<10.
58	1,2,4-TRIMETHYLBENZENE	23.56	**58**	1,2,4-TRIMETHYLBENZENE	<10.

60	d-LIMONENE	<10.	**60**	d-LIMONENE	<10.
61	p-ISOPROPYLTOLUENE	<10.	**61**	p-ISOPROPYLTOLUENE	<10.
63	1,2,3-TRIMETHYLBENZENE	72.92	**63**	1,2,3-TRIMETHYLBENZENE	28.76
65	n-UNDECANE	361.64	**65**	n-UNDECANE	191.32
68	n-DODECANE	252.84	**68**	n-DODECANE	135.52
78	Naphthalene	38.36	**78**	Naphthalene	22.76

Target Analyte Response as a Percentage of the Total Sample Response

Target analyte % results for the SynGas Long Term Mix

SynGas_Long Term Mix 1		SynGas_Long Term Mix 2	
Analyte	**% of T**	**Analyte**	**% of T**
Propene	7.91	Propene	5.67
1,3-Butadiene	3.17	1,3-Butadiene	1.75
ISOPRENE	0.43	ISOPRENE	0.26
ACETONE	1.14	ACETONE	1.53
n-HEXANE	5.11	n-HEXANE	4.58
METHYL ETHYL KETONE	2.07	METHYL ETHYL KETONE	0.79
CYCLOHEXANE	0.21	CYCLOHEXANE	0.09
n-HEPTANE	2.11	n-HEPTANE	1.99
BENZENE	7.81	BENZENE	7.59
METHYLCYCLOHEXANE	0.39	METHYLCYCLOHEXANE	0.34
TOLUENE	3.14	TOLUENE	3.66
n-NONANE	0.71	n-NONANE	1.32
ETHYLBENZENE	0.56	ETHYLBENZENE	2.31
M,P-XYLENE	1.13	M,P-XYLENE	2.14
O-XYLENE	0.29	O-XYLENE	1.46
STYRENE	0.72	STYRENE	4.83
ISOPROPYLBENZENE	0.03	ISOPROPYLBENZENE	0.25
n-DECANE	0.46	n-DECANE	1.05
n-PROPYLBENZENE	0.04	n-PROPYLBENZENE	0.71
1,3,5-TRIMETHYLBENZENE	0.09	1,3,5-TRIMETHYLBENZENE	0.19
1,2,4-TRIMETHYLBENZENE	0.29	1,2,4-TRIMETHYLBENZENE	0.61
d-LIMONENE	0.02	d-LIMONENE	0.68

p-ISOPROPYLTOLUENE	0.07	p-ISOPROPYLTOLUENE	0.31
1,2,3-TRIMETHYLBENZENE	0.02	1,2,3-TRIMETHYLBENZENE	0.26
n-UNDECANE	0.06	n-UNDECANE	0.67
n-DODECANE	0.02	n-DODECANE	0.31
Naphthalene	0.03	Naphthalene	0.12
Total of Chromatogram	**38.03**	**Total %**	**45.47**

Target analyte % results for the SynGas 100% Construction Mix

SynGas_Target Analyte Percent of Total Response (100% Construction Mix)

SynGas_100% Construction Mix 1		SynGas_100% Construction Mix 2	
Analyte	**% of T**	**Analyte**	**% of T**
Propene	6.77	Propene	4.52
1,3-Butadiene	1.84	1,3-Butadiene	1.18
ISOPRENE	0.32	ISOPRENE	0.14
ACETONE	1.91	ACETONE	1.84
n-HEXANE	3.52	n-HEXANE	2.54
METHYL ETHYL KETONE	0.91	METHYL ETHYL KETONE	0.86
CYCLOHEXANE	0.00	CYCLOHEXANE	0.07
n-HEPTANE	1.97	n-HEPTANE	1.38
BENZENE	6.78	BENZENE	6.84
METHYLCYCLOHEXANE	1.11	METHYLCYCLOHEXANE	0.32
TOLUENE	3.21	TOLUENE	4.04
n-NONANE	1.54	n-NONANE	2.01
ETHYLBENZENE	1.49	ETHYLBENZENE	3.15
M,P-XYLENE	1.96	M,P-XYLENE	2.71
O-XYLENE	0.98	O-XYLENE	1.34
STYRENE	3.17	STYRENE	5.37
ISOPROPYLBENZENE	0.18	ISOPROPYLBENZENE	0.31

n-DECANE	1.73	n-DECANE	1.94
n-PROPYLBENZENE	0.67	n-PROPYLBENZENE	0.68
1,3,5-TRIMETHYLBENZENE	0.45	1,3,5-TRIMETHYLBENZENE	0.39
1,2,4-TRIMETHYLBENZENE	1.48	1,2,4-TRIMETHYLBENZENE	1.12
d-LIMONENE	0.52	d-LIMONENE	0.81
p-ISOPROPYLTOLUENE	0.25	p-ISOPROPYLTOLUENE	0.43
1,2,3-TRIMETHYLBENZENE	0.28	1,2,3-TRIMETHYLBENZENE	0.48
n-UNDECANE	0.93	n-UNDECANE	1.37
n-DODECANE	0.28	n-DODECANE	0.42
Naphthalene	0.09	Naphthalene	0.27
Total of Chromatogram	**44.34**	**Total %**	**46.53**

Target analyte % results for the SynGas 50% Food Mix

SynGas_50% Food Mix 1		**SynGas_50% Food Mix 2**	
Analyte	**% of T**	**Analyte**	**% of T**
Propene	5.63	Propene	6.72
1,3-Butadiene	2.43	1,3-Butadiene	2.92
ISOPRENE	0.22	ISOPRENE	0.36
ACETONE	1.21	ACETONE	1.21
n-HEXANE	2.69	n-HEXANE	3.38
METHYL ETHYL KETONE	2.25	METHYL ETHYL KETONE	1.26
CYCLOHEXANE	0.15	CYCLOHEXANE	0.19
n-HEPTANE	1.56	n-HEPTANE	2.22
BENZENE	8.18	BENZENE	6.59
METHYLCYCLOHEXANE	0.91	METHYLCYCLOHEXANE	0.27
TOLUENE	3.55	TOLUENE	3.04
n-NONANE	1.73	n-NONANE	1.01
ETHYLBENZENE	1.55	ETHYLBENZENE	2.73
M,P-XYLENE	2.18	M,P-XYLENE	1.81
O-XYLENE	1.22	O-XYLENE	2.08
STYRENE	3.08	STYRENE	4.85
ISOPROPYLBENZENE	0.18	ISOPROPYLBENZENE	0.46
n-DECANE	1.46	n-DECANE	1.05
n-PROPYLBENZENE	0.44	n-PROPYLBENZENE	0.77

1,3,5-TRIMETHYLBENZENE	0.26	1,3,5-TRIMETHYLBENZENE	0.71
1,2,4-TRIMETHYLBENZENE	0.76	1,2,4-TRIMETHYLBENZENE	0.39
d-LIMONENE	0.53	d-LIMONENE	1.22
p-ISOPROPYLTOLUENE	0.32	p-ISOPROPYLTOLUENE	0.28
1,2,3-TRIMETHYLBENZENE	0.31	1,2,3-TRIMETHYLBENZENE	0.22
n-UNDECANE	0.88	n-UNDECANE	0.52
n-DODECANE	0.29	n-DODECANE	0.21
Naphthalene	0.08	Naphthalene	0.08
Total of Chromatogram	**44.05**	**Total %**	**46.55**

Target analyte % results for the SynGas 33% POL Mix

SynGas_33% POL Mix 1		SynGas_33% POL Mix 2	
Analyte	**% of T**	**Analyte**	**% of T**
Propene	5.11	Propene	5.73
1,3-Butadiene	2.12	1,3-Butadiene	3.07
ISOPRENE	3.99	ISOPRENE	0.33
ACETONE	1.47	ACETONE	1.04
n-HEXANE	1.45	n-HEXANE	2.58
METHYL ETHYL KETONE	1.19	METHYL ETHYL KETONE	1.08
CYCLOHEXANE	0.21	CYCLOHEXANE	0.29
n-HEPTANE	1.08	n-HEPTANE	2.16
BENZENE	5.86	BENZENE	7.08
METHYLCYCLOHEXANE	1.05	METHYLCYCLOHEXANE	0.41
TOLUENE	3.07	TOLUENE	3.09
n-NONANE	1.34	n-NONANE	1.04
ETHYLBENZENE	2.12	ETHYLBENZENE	1.63
M,P-XYLENE	2.16	M,P-XYLENE	1.41
O-XYLENE	1.24	O-XYLENE	1.46
STYRENE	3.69	STYRENE	3.35
ISOPROPYLBENZENE	0.27	ISOPROPYLBENZENE	0.24

n-DECANE	1.58	n-DECANE	0.88
n-PROPYLBENZENE	0.69	n-PROPYLBENZENE	0.58
1,3,5-TRIMETHYLBENZENE	0.39	1,3,5-TRIMETHYLBENZENE	0.56
1,2,4-TRIMETHYLBENZENE	1.08	1,2,4-TRIMETHYLBENZENE	0.31
d-LIMONENE	0.92	d-LIMONENE	0.85
p-ISOPROPYLTOLUENE	0.29	p-ISOPROPYLTOLUENE	0.21
1,2,3-TRIMETHYLBENZENE	0.41	1,2,3-TRIMETHYLBENZENE	0.18
n-UNDECANE	0.99	n-UNDECANE	0.52
n-DODECANE	0.49	n-DODECANE	0.18
Naphthalene	0.21	Naphthalene	0.09
Total of Chromatogram	**44.47**	**Total %**	**40.35**

Target analyte % results for the SynGas 40% Tire Mix

SynGas_40% Tire Mix 1		SynGas_40% Tire Mix 2	
Analyte	**% of T**	**Analyte**	**% of T**
Propene	4.37	Propene	3.95
1,3-Butadiene	2.78	1,3-Butadiene	2.51
ISOPRENE	4.83	ISOPRENE	0.18
ACETONE	0.92	ACETONE	1.11
n-HEXANE	2.26	n-HEXANE	1.71
METHYL ETHYL KETONE	0.39	METHYL ETHYL KETONE	0.82
CYCLOHEXANE	0.29	CYCLOHEXANE	0.33
n-HEPTANE	1.77	n-HEPTANE	1.31
BENZENE	7.07	BENZENE	6.53
METHYLCYCLOHEXANE	0.49	METHYLCYCLOHEXANE	0.46
TOLUENE	3.67	TOLUENE	3.51
n-NONANE	0.96	n-NONANE	1.07
ETHYLBENZENE	2.48	ETHYLBENZENE	2.94
M,P-XYLENE	1.78	M,P-XYLENE	1.93
O-XYLENE	1.29	O-XYLENE	2.34

STYRENE	4.41	STYRENE	4.51
ISOPROPYLBENZENE	0.27	ISOPROPYLBENZENE	0.37
n-DECANE	0.84	n-DECANE	1.01
n-PROPYLBENZENE	0.73	n-PROPYLBENZENE	0.76
1,3,5-TRIMETHYLBENZENE	0.17	1,3,5-TRIMETHYLBENZENE	0.17
1,2,4-TRIMETHYLBENZENE	0.49	1,2,4-TRIMETHYLBENZENE	0.41
d-LIMONENE	0.68	d-LIMONENE	0.61
p-ISOPROPYLTOLUENE	0.68	p-ISOPROPYLTOLUENE	0.63
1,2,3-TRIMETHYLBENZENE	0.21	1,2,3-TRIMETHYLBENZENE	0.18
n-UNDECANE	0.51	n-UNDECANE	0.45
n-DODECANE	0.25	n-DODECANE	0.17
Naphthalene	0.11	Naphthalene	0.06
Total %	**44.70**	**Total %**	**40.03**

Target analyte % results for the SynGas 50% Plastics Mix

SynGas_50% Plastics Mix	
Analyte	**% of T**
Propene	9.48
1,3-Butadiene	4.39
ISOPRENE	0.49
ACETONE	0.76
n-HEXANE	5.15
METHYL ETHYL KETONE	0.55
CYCLOHEXANE	0.21
n-HEPTANE	1.82
BENZENE	8.84
METHYLCYCLOHEXANE	0.31
TOLUENE	6.50
n-NONANE	0.57
ETHYLBENZENE	0.52

M,P-XYLENE	0.98
O-XYLENE	0.31
STYRENE	1.01
ISOPROPYLBENZENE	0.04
n-DECANE	0.41
n-PROPYLBENZENE	0.12
1,3,5-TRIMETHYLBENZENE	0.09
1,2,4-TRIMETHYLBENZENE	0.26
d-LIMONENE	0.06
p-ISOPROPYLTOLUENE	0.05
1,2,3-TRIMETHYLBENZENE	0.08
n-UNDECANE	0.22
n-DODECANE	0.06
Naphthalene	0.02
Total of Chromatogram	**43.30**

Target Analyte Response as a Percentage of the Total Sample Response

Target Analyte % Results for the Diesel Exhaust Long Term Mix

Exhaust_Long Term Mix 1		Exhaust_Long Term Mix 2	
Analyte	**% of T**	**Analyte**	**% of T**
Propene	10.93	Propene	16.01
1,3-Butadiene	0.00	1,3-Butadiene	0.00
ISOPRENE	0.00	ISOPRENE	0.00
ACETONE	1.39	ACETONE	1.89
n-HEXANE	0.91	n-HEXANE	1.59
METHYL ETHYL KETONE	0.00	METHYL ETHYL KETONE	0.42
CYCLOHEXANE	0.00	CYCLOHEXANE	0.00
n-HEPTANE	0.26	n-HEPTANE	0.67
BENZENE	38.83	BENZENE	32.79
METHYLCYCLOHEXANE	0.00	METHYLCYCLOHEXANE	0.17
TOLUENE	3.42	TOLUENE	0.35

n-NONANE	0.26	n-NONANE	0.58
ETHYLBENZENE	1.15	ETHYLBENZENE	2.52
M,P-XYLENE	0.77	M,P-XYLENE	1.59
O-XYLENE	0.21	O-XYLENE	0.89
STYRENE	2.11	STYRENE	1.48
ISOPROPYLBENZENE	0.08	ISOPROPYLBENZENE	0.14
n-DECANE	0.41	n-DECANE	0.74
n-PROPYLBENZENE	0.31	n-PROPYLBENZENE	0.24
1,3,5-TRIMETHYLBENZENE	0.14	1,3,5-TRIMETHYLBENZENE	0.15
1,2,4-TRIMETHYLBENZENE	0.31	1,2,4-TRIMETHYLBENZENE	0.48
d-LIMONENE	0.00	d-LIMONENE	0.00
p-ISOPROPYLTOLUENE	0.29	p-ISOPROPYLTOLUENE	0.11
1,2,3-TRIMETHYLBENZENE	0.02	1,2,3-TRIMETHYLBENZENE	0.15
n-UNDECANE	0.37	n-UNDECANE	0.52
n-DODECANE	0.19	n-DODECANE	0.12
Naphthalene	0.18	Naphthalene	0.17
Total of Chromatogram	**62.54**	**Total %**	**63.77**

Target Analyte % Results for the Diesel Exhaust 100% Construction Mix

Exhaust_100% Construction Mix 1		**Exhaust_100% Construction Mix 2**	
Analyte	**% of T**	**Analyte**	**% of T**
Propene	27.56	Propene	7.91
1,3-Butadiene	0.00	1,3-Butadiene	0.00
ISOPRENE	0.00	ISOPRENE	0.00
ACETONE	1.48	ACETONE	2.47
n-HEXANE	0.81	n-HEXANE	1.14
METHYL ETHYL KETONE	0.28	METHYL ETHYL KETONE	0.31
CYCLOHEXANE	0.00	CYCLOHEXANE	0.07
n-HEPTANE	0.00	n-HEPTANE	0.59

BENZENE	10.64	BENZENE	32.88
METHYLCYCLOHEXANE	0.00	METHYLCYCLOHEXANE	0.17
TOLUENE	3.01	TOLUENE	3.14
n-NONANE	0.38	n-NONANE	0.65
ETHYLBENZENE	1.37	ETHYLBENZENE	1.02
M,P-XYLENE	0.94	M,P-XYLENE	1.18
O-XYLENE	0.81	O-XYLENE	0.46
STYRENE	3.47	STYRENE	1.36
ISOPROPYLBENZENE	0.18	ISOPROPYLBENZENE	0.08
n-DECANE	0.85	n-DECANE	0.21
n-PROPYLBENZENE	0.31	n-PROPYLBENZENE	0.25
1,3,5-TRIMETHYLBENZENE	0.17	1,3,5-TRIMETHYLBENZENE	0.26
1,2,4-TRIMETHYLBENZENE	0.32	1,2,4-TRIMETHYLBENZENE	0.55
d-LIMONENE	0.00	d-LIMONENE	0.00
p-ISOPROPYLTOLUENE	0.06	p-ISOPROPYLTOLUENE	0.08
1,2,3-TRIMETHYLBENZENE	0.12	1,2,3-TRIMETHYLBENZENE	0.11
n-UNDECANE	0.24	n-UNDECANE	0.58
n-DODECANE	0.18	n-DODECANE	0.16
Naphthalene	0.36	Naphthalene	0.38
Total of Chromatogram	**53.54**	**Total %**	**56.01**

Target Analyte % Results for the Diesel Exhaust 50% Food Mix

Exhaust_50% Food Mix 1		**Exhaust_50% Food Mix 2**	
Analyte	**% of T**	**Analyte**	**% of T**
Propene	15.69	Propene	1.05
1,3-Butadiene	0.00	1,3-Butadiene	0.00
ISOPRENE	0.00	ISOPRENE	0.00
ACETONE	1.62	ACETONE	0.23
n-HEXANE	0.91	n-HEXANE	0.26
METHYL ETHYL KETONE	0.06	METHYL ETHYL KETONE	0.00
CYCLOHEXANE	0.00	CYCLOHEXANE	0.00
n-HEPTANE	0.41	n-HEPTANE	0.18

BENZENE	26.32	BENZENE	5.56
METHYLCYCLOHEXANE	0.00	METHYLCYCLOHEXANE	0.00
TOLUENE	2.51	TOLUENE	2.26
n-NONANE	0.68	n-NONANE	1.22
ETHYLBENZENE	1.77	ETHYLBENZENE	5.21
M,P-XYLENE	1.11	M,P-XYLENE	2.64
O-XYLENE	0.11	O-XYLENE	0.11
STYRENE	1.92	STYRENE	21.05
ISOPROPYLBENZENE	0.09	ISOPROPYLBENZENE	0.71
n-DECANE	1.01	n-DECANE	3.12
n-PROPYLBENZENE	0.22	n-PROPYLBENZENE	0.75
1,3,5-TRIMETHYLBENZENE	0.07	1,3,5-TRIMETHYLBENZENE	0.41
1,2,4-TRIMETHYLBENZENE	0.36	1,2,4-TRIMETHYLBENZENE	1.26
d-LIMONENE	0.00	d-LIMONENE	5.01
p-ISOPROPYLTOLUENE	0.00	p-ISOPROPYLTOLUENE	1.14
1,2,3-TRIMETHYLBENZENE	0.09	1,2,3-TRIMETHYLBENZENE	0.87
n-UNDECANE	0.62	n-UNDECANE	2.54
n-DODECANE	0.58	n-DODECANE	1.05
Naphthalene	0.11	Naphthalene	1.12
Total of Chromatogram	**56.26**	**Total %**	**57.75**

Target Analyte % Results for the Diesel Exhaust 33% POL Mix

Exhaust_33% POL Mix 1		**Exhaust_33% POL Mix 2**	
Analyte	**% of T**	**Analyte**	**% of T**
Propene	12.06	Propene	11.89
1,3-Butadiene	0.00	1,3-Butadiene	0.00
ISOPRENE	0.00	ISOPRENE	0.00
ACETONE	2.74	ACETONE	1.51
n-HEXANE	0.24	n-HEXANE	0.82
METHYL ETHYL KETONE	0.41	METHYL ETHYL KETONE	0.19

CYCLOHEXANE	0.00	CYCLOHEXANE	0.00
n-HEPTANE	0.59	n-HEPTANE	0.43
BENZENE	26.00	BENZENE	36.59
METHYLCYCLOHEXANE	18.00	METHYLCYCLOHEXANE	0.00
TOLUENE	3.75	TOLUENE	4.17
n-NONANE	0.72	n-NONANE	0.42
ETHYLBENZENE	1.72	ETHYLBENZENE	2.25
M,P-XYLENE	1.36	M,P-XYLENE	1.17
O-XYLENE	1.24	O-XYLENE	0.36
STYRENE	1.94	STYRENE	1.24
ISOPROPYLBENZENE	0.15	ISOPROPYLBENZENE	0.14
n-DECANE	1.61	n-DECANE	1.09
n-PROPYLBENZENE	0.39	n-PROPYLBENZENE	0.29
1,3,5-TRIMETHYLBENZENE	0.34	1,3,5-TRIMETHYLBENZENE	0.41
1,2,4-TRIMETHYLBENZENE	1.21	1,2,4-TRIMETHYLBENZENE	0.16
d-LIMONENE	0.00	d-LIMONENE	0.00
p-ISOPROPYLTOLUENE	0.18	p-ISOPROPYLTOLUENE	0.15
1,2,3-TRIMETHYLBENZENE	0.44	1,2,3-TRIMETHYLBENZENE	0.09
n-UNDECANE	1.91	n-UNDECANE	0.55
n-DODECANE	0.64	n-DODECANE	0.28
Naphthalene	0.75	Naphthalene	0.21
Total of Chromatogram	**78.39**	**Total %**	**64.41**

Target Analyte % Results for the Diesel Exhaust 40% Tire Mix

Exhaust_40% Tire Mix 1		**Exhaust_40% Tire Mix 2**	
Analyte	**% of T**	**Analyte**	**% of T**
Propene	11.91	Propene	5.95
1,3-Butadiene	0.00	1,3-Butadiene	0.00
ISOPRENE	0.00	ISOPRENE	0.00
ACETONE	1.81	ACETONE	1.93

n-HEXANE	0.87	n-HEXANE	0.91
METHYL ETHYL KETONE	0.16	METHYL ETHYL KETONE	0.16
CYCLOHEXANE	0.00	CYCLOHEXANE	0.00
n-HEPTANE	0.55	n-HEPTANE	0.52
BENZENE	36.68	BENZENE	33.21
METHYLCYCLOHEXANE	0.11	METHYLCYCLOHEXANE	0.00
TOLUENE	5.77	TOLUENE	5.33
n-NONANE	0.12	n-NONANE	0.38
ETHYLBENZENE	2.11	ETHYLBENZENE	2.11
M,P-XYLENE	1.31	M,P-XYLENE	1.09
O-XYLENE	0.11	O-XYLENE	0.29
STYRENE	2.37	STYRENE	0.97
ISOPROPYLBENZENE	0.14	ISOPROPYLBENZENE	0.17
n-DECANE	0.74	n-DECANE	0.84
n-PROPYLBENZENE	0.31	n-PROPYLBENZENE	0.15
1,3,5-TRIMETHYLBENZENE	0.12	1,3,5-TRIMETHYLBENZENE	0.33
1,2,4-TRIMETHYLBENZENE	0.53	1,2,4-TRIMETHYLBENZENE	0.34
d-LIMONENE	0.00	d-LIMONENE	0.00
p-ISOPROPYLTOLUENE	0.09	p-ISOPROPYLTOLUENE	0.26
1,2,3-TRIMETHYLBENZENE	0.21	1,2,3-TRIMETHYLBENZENE	0.11
n-UNDECANE	0.66	n-UNDECANE	0.19
n-DODECANE	0.09	n-DODECANE	0.09
Naphthalene	0.21	Naphthalene	0.09
Total %	**66.98**	**Total %**	**55.42**

Target Analyte % Results for the Diesel 50% Plastics Mix

Exhaust_50% Plastics Mix

Analyte	**% of T**
Propene	11.39
1,3-Butadiene	0.00

ISOPRENE	0.00
ACETONE	1.29
n-HEXANE	1.44
METHYL ETHYL KETONE	0.11
CYCLOHEXANE	0.00
n-HEPTANE	0.69
BENZENE	43.24
METHYLCYCLOHEXANE	0.00
TOLUENE	2.91
n-NONANE	0.42
ETHYLBENZENE	1.31
M,P-XYLENE	0.63
O-XYLENE	0.18
STYRENE	2.11
ISOPROPYLBENZENE	0.00
n-DECANE	0.42
n-PROPYLBENZENE	0.15
1,3,5-TRIMETHYLBENZENE	0.14
1,2,4-TRIMETHYLBENZENE	0.15
d-LIMONENE	0.06
p-ISOPROPYLTOLUENE	0.05
1,2,3-TRIMETHYLBENZENE	0.08
n-UNDECANE	0.14
n-DODECANE	0.18
Naphthalene	0.36
Total of Chromatogram	**67.45**

The percentages of total hydrocarbons as carbon atom units (C_3, C_4, etc) were calculated based on mass and retention time. The results are as follows:

SynGas Total Response as % Carbon Atom units

C_Units	SynGas_Long Term Mix 1	C_Units	SynGas_Long Term Mix 2
C3	10.42	C3	6.37
C4	12.79	C4	8.74
C5	21.64	C5	13.05

C6	28.50	C6	21.45
C7	7.88	C7	8.16
C8	13.31	C8	13.91
C9	4.35	C9	15.67
C10	0.89	C10	7.49
C11	0.17	C11	3.42
C12	0.04	C12	1.38

C_Units	SynGas_100% Construction Mix 1	C_Units	SynGas_100% Construction Mix 2
C3	8.01	C3	5.25
C4	8.66	C4	5.06
C5	12.25	C5	8.74
C6	19.54	C6	16.98
C7	6.59	C7	6.80
C8	15.03	C8	16.37
C9	12.33	C9	19.22
C10	11.29	C10	12.71
C11	4.76	C11	6.77
C12	1.25	C12	2.12

C_Units	SynGas_50% Food Mix 1	C_Units	SynGas_50% Food Mix 2
C3	6.62	C3	8.60
C4	9.38	C4	11.42
C5	11.30	C5	15.29
C6	22.75	C6	18.92
C7	6.56	C7	7.46
C8	16.23	C8	11.43
C9	12.95	C9	15.66
C10	8.73	C10	7.92
C11	4.29	C11	2.54
C12	1.20	C12	0.78

SynGas Total Response as % Carbon Atom units

C_Units	SynGas_33% POL Mix 1	C_Units	SynGas_33% POL Mix 2
C3	6.29	C3	7.51
C4	10.10	C4	11.29
C5	14.34	C5	16.87

C6	16.90	C6	22.72
C7	7.37	C7	9.58
C8	12.65	C8	11.21
C9	14.21	C9	11.17
C10	10.78	C10	5.95
C11	5.27	C11	2.27
C12	2.17	C12	0.71

C_Units	SynGas_40% Tire Mix 1	C_Units	SynGas_40% Tire Mix 2
C3	5.00	C3	4.97
C4	9.65	C4	10.60
C5	16.04	C5	16.78
C6	21.36	C6	19.52
C7	10.92	C7	9.91
C8	12.52	C8	12.72
C9	14.67	C9	16.45
C10	6.13	C10	6.24
C11	2.64	C11	2.17
C12	1.07	C12	0.65

C_Units	SynGas_50% Plastics Mix
C3	12.10
C4	14.16
C5	22.49
C6	27.14
C7	6.57
C8	9.48
C9	3.99
C10	2.62
C11	0.99
C12	0.16

SynGas Exhaust Total Response as % Carbon Atom units

C_Units	Exhaust_Long Term Mix 1	C_Units	Exhaust_Long Term Mix 2
C3	12.10	C3	16.77

C4	6.07	C4	2.68
C5	9.43	C5	10.92
C6	40.68	C6	36.58
C7	4.64	C7	4.72
C8	13.39	C8	7.89
C9	1.05	C9	2.01
C10	2.52	C10	3.63
C11	1.46	C11	1.98
C12	0.73	C12	0.44

C_Units	Exhaust_100% Construction Mix 1	C_Units	Exhaust_100% Construction Mix 2
C3	29.72	C3	15.61
C4	4.02	C4	3.41
C5	11.12	C5	12.62
C6	13.14	C6	36.75
C7	4.01	C7	4.61
C8	15.77	C8	6.20
C9	3.80	C9	2.88
C10	2.32	C10	3.00
C11	1.20	C11	2.16
C12	1.49	C12	1.18

C_Units	Exhaust_50% Food Mix 1	C_Units	Exhaust_50% Food Mix 2
C3	17.54	C3	3.30
C4	11.17	C4	1.45
C5	10.68	C5	2.69
C6	28.87	C6	6.11
C7	1.09	C7	2.57
C8	10.04	C8	30.83
C9	2.52	C9	12.21
C10	3.20	C10	16.72
C11	2.19	C11	12.67
C12	1.79	C12	4.84

SynGas Exhaust Total Response as % Carbon Atom units

C_Units	Exhaust_33% POL Mix 1	C_Units	Exhaust_33% POL Mix 2

C3	13.33	**C3**	13.57
C4	7.64	**C4**	5.66
C5	9.97	**C5**	6.50
C6	31.17	**C6**	39.03
C7	5.17	**C7**	4.68
C8	5.72	**C8**	6.69
C9	3.66	**C9**	2.38
C10	7.88	**C10**	4.51
C11	5.78	**C11**	1.64
C12	2.57	**C12**	1.06

C_Units	**Exhaust_40% Tire Mix 1**	C_Units	**Exhaust_40% Tire Mix 2**
C3	13.24	**C3**	12.24
C4	6.45	**C4**	8.66
C5	7.88	**C5**	6.99
C6	41.75	**C6**	36.89
C7	6.80	**C7**	6.46
C8	6.98	**C8**	6.07
C9	1.98	**C9**	2.47
C10	2.63	**C10**	2.12
C11	2.48	**C11**	0.57
C12	0.75	**C12**	0.31

C_Units	**Exhaust_50% Plastics Mix**
C3	12.13
C4	5.22
C5	10.16
C6	46.46
C7	1.07
C8	7.78
C9	3.09
C10	1.43
C11	0.51
C12	0.01

The total responses of the chromatograms were grouped into classes using extracted ion chromatograms. The classes are based on specific molecular ions and are defined as Alkanes, Cycloalkanes, Alkenes, Alkylbenzenes, Indanes and Naphthalenes.

SynGas Hydrocarbon Fuels Class Group Comparison as Percent of Total Response

Groups	Long Term 1	Construction Mix 1	40% Tires 1	50% Food 1	33% POL 1	50% Plastics
Alkanes	24.3	33.5	20.2	26.1	26.1	24.5
CycloAlkanes	42.7	33.4	38.4	33.7	35.3	43.8
Alkenes	22.2	14.7	21.0	16.0	15.9	21.4
AlkylBenzenes	9.8	15.4	16.9	22.1	19.1	9.2
Indanes	0.9	2.6	3.3	1.8	3.1	1.0
Naphthalenes	0.1	0.3	0.3	0.2	0.5	0.1

Groups	Long Term 2	Construction Mix 2	40% Tires 2	50% Food 2	33% POL 2
Alkanes	28.5	30.8	21.5	23.4	18.6
CycloAlkanes	32.3	28.8	38.6	36.8	39.8
Alkenes	16.7	13.3	20.9	19.0	24.3
AlkylBenzenes	18.8	22.3	15.9	15.9	14.4
Indanes	3.4	4.2	3.0	4.7	2.7
Naphthalenes	0.3	0.6	0.2	0.2	0.3

Groups	Natural Gas	Reg Gasoline	Kerosine	JP-8 Fuel	#1 Diesel	Heating Oil
Alkanes	57.2	36.1	32.6	27.4	35.6	28.0
CycloAlkanes	36.2	32.8	37.6	31.9	39.2	26.9
Alkenes	1.6	4.5	10.0	8.8	8.4	8.6
AlkylBenzenes	4.7	24.0	16.8	27.4	14.3	27.5
Indanes	0.3	2.3	2.6	4.1	2.0	8.0
Naphthalenes	0.0	0.4	0.5	0.4	0.5	1.1

Exhaust Hydrocarbon Fuels Class Group Comparison as Percent of Total Response

Groups	Long Term 1	Construction Mix 1	40% Tires 1	50% Food 1	33% POL 1
Alkanes	19.3	18.3	19.8	17.4	25.4
CycloAlkanes	25.3	22.8	31.4	32.5	33.1
Alkenes	4.5	10.6	8.6	4.2	8.4
AlkylBenzenes	46.5	41.2	36.8	43.7	29.3
Indanes	3.6	5.9	2.8	1.9	2.7
Naphthalenes	0.7	1.2	0.6	0.4	1.1

Groups	Long Term 2	Construction Mix 2	40% Tires 2	50% Food 2	33% POL 2
Alkanes	22.4	17.6	13.6	15.0	15.1
CycloAlkanes	32.1	24.5	20.7	17.0	20.7
Alkenes	6.4	6.0	10.1	10.1	6.6
AlkylBenzenes	36.6	49.5	54.1	36.4	55.7
Indanes	2.1	1.8	1.1	20.1	1.4
Naphthalenes	0.5	0.6	0.4	1.5	0.5

Groups	50% Plastics	Ref Diesel Exhaust_1	Ref Diesel Exhaust_2
Alkanes	25.4	34.0	27.5
CycloAlkanes	37.6	33.3	30.6
Alkenes	6.9	9.6	8.4
AlkylBenzenes	26.9	17.9	25.1
Indanes	2.9	3.5	5.5
Naphthalenes	0.4	1.9	2.8

The graphical representation of hydrocarbon class results are in shown on the next two pages.

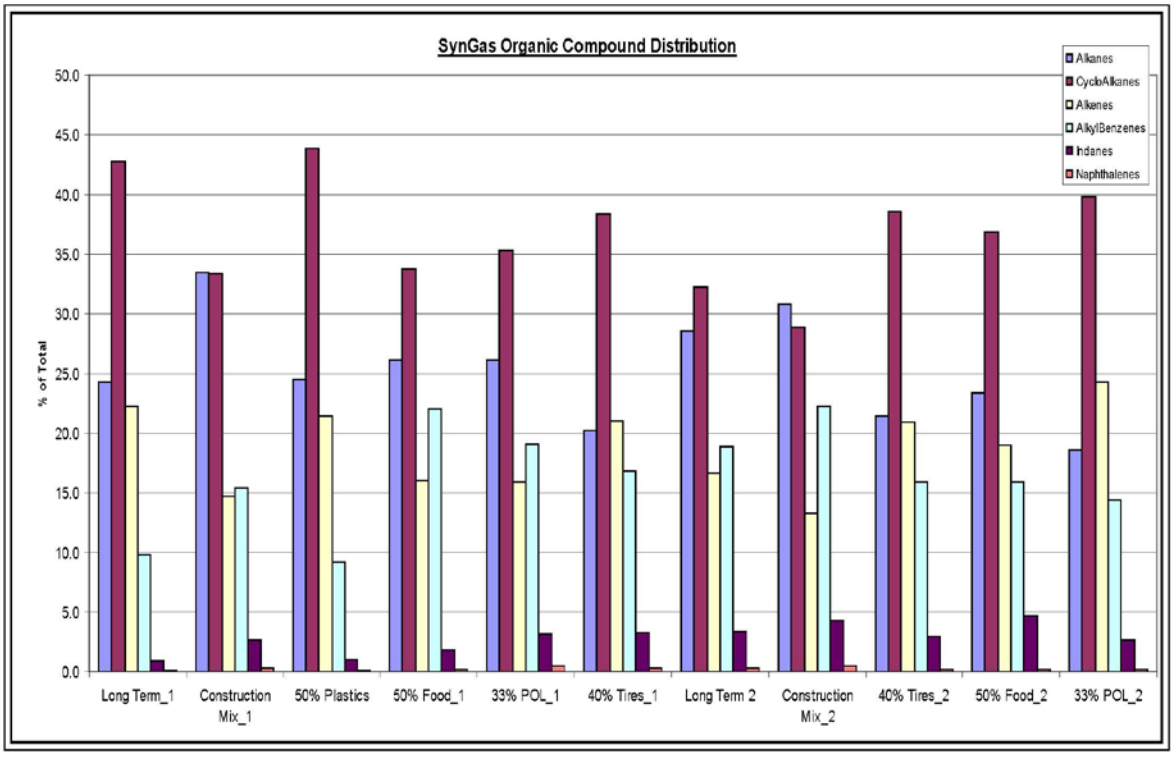

Fig 6.SynGas Organic Compound Distribution

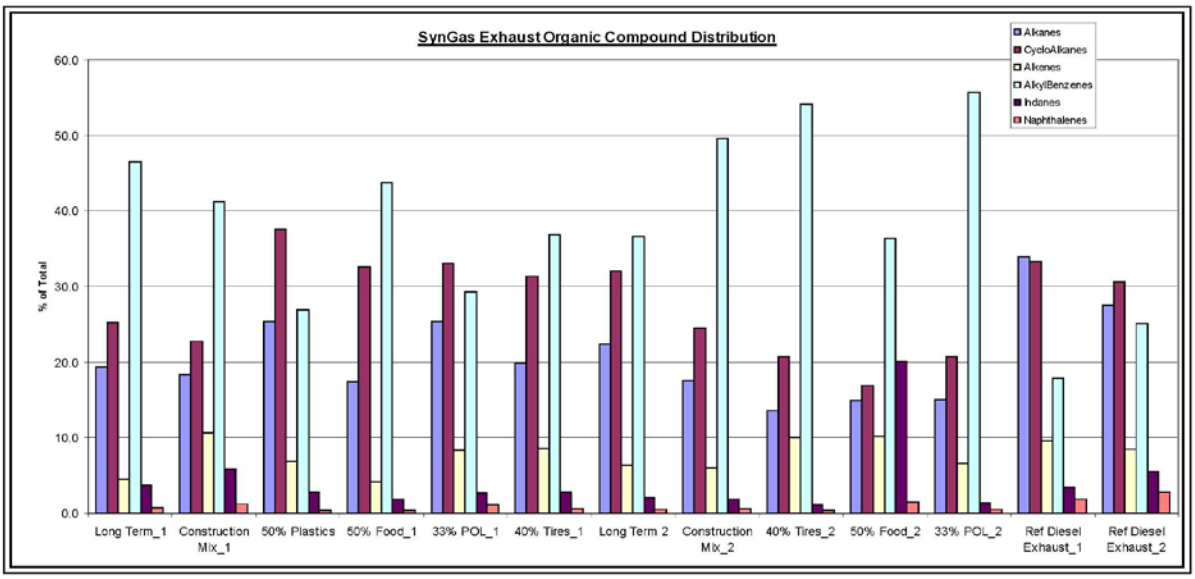

Fig 7, SynGas Exhaust Organic compound Distribution

Long Term Mix 1 Total Ion Chromatograms

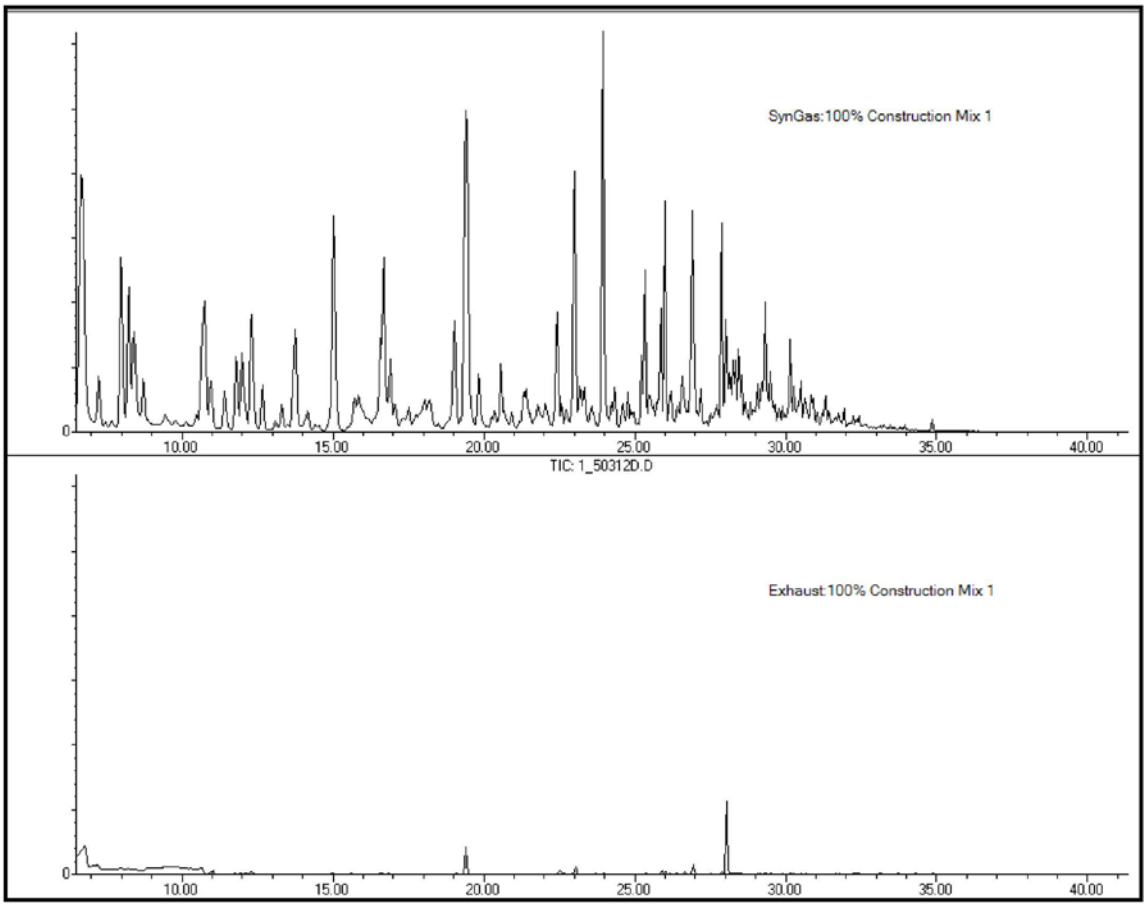

Long Term Mix 2 Total Ion Chromatograms

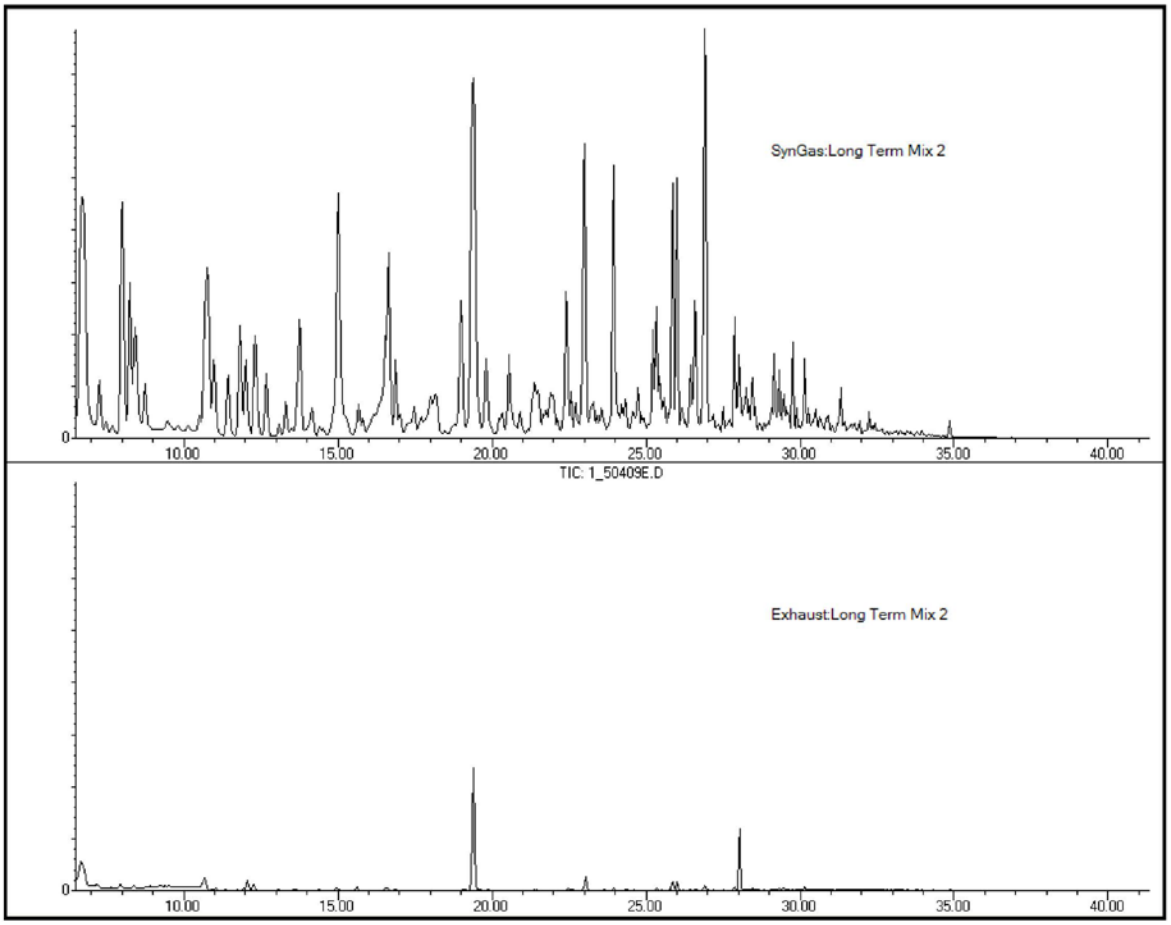

Construction Mix 1 Total Ion Chromatograms

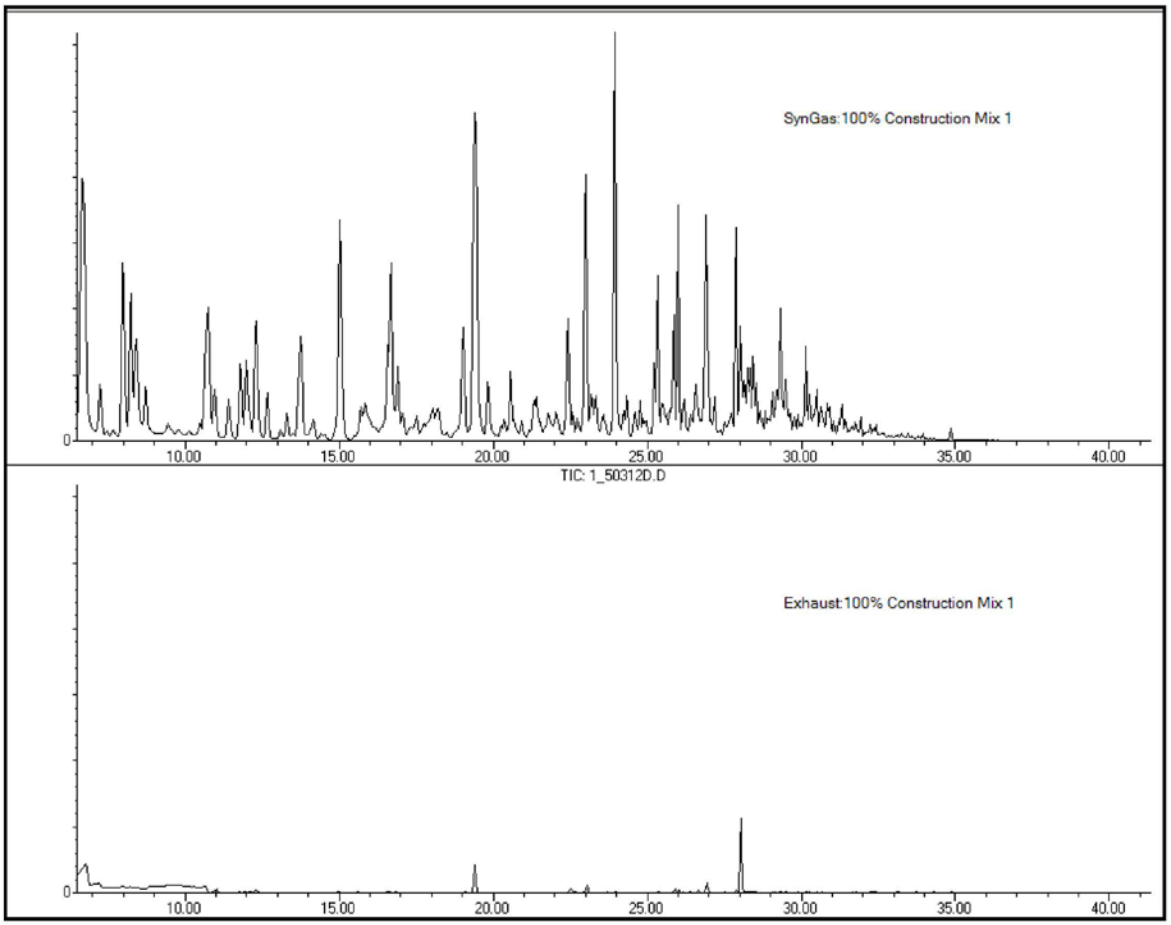

Construction Mix 2 Total Ion Chromatograms

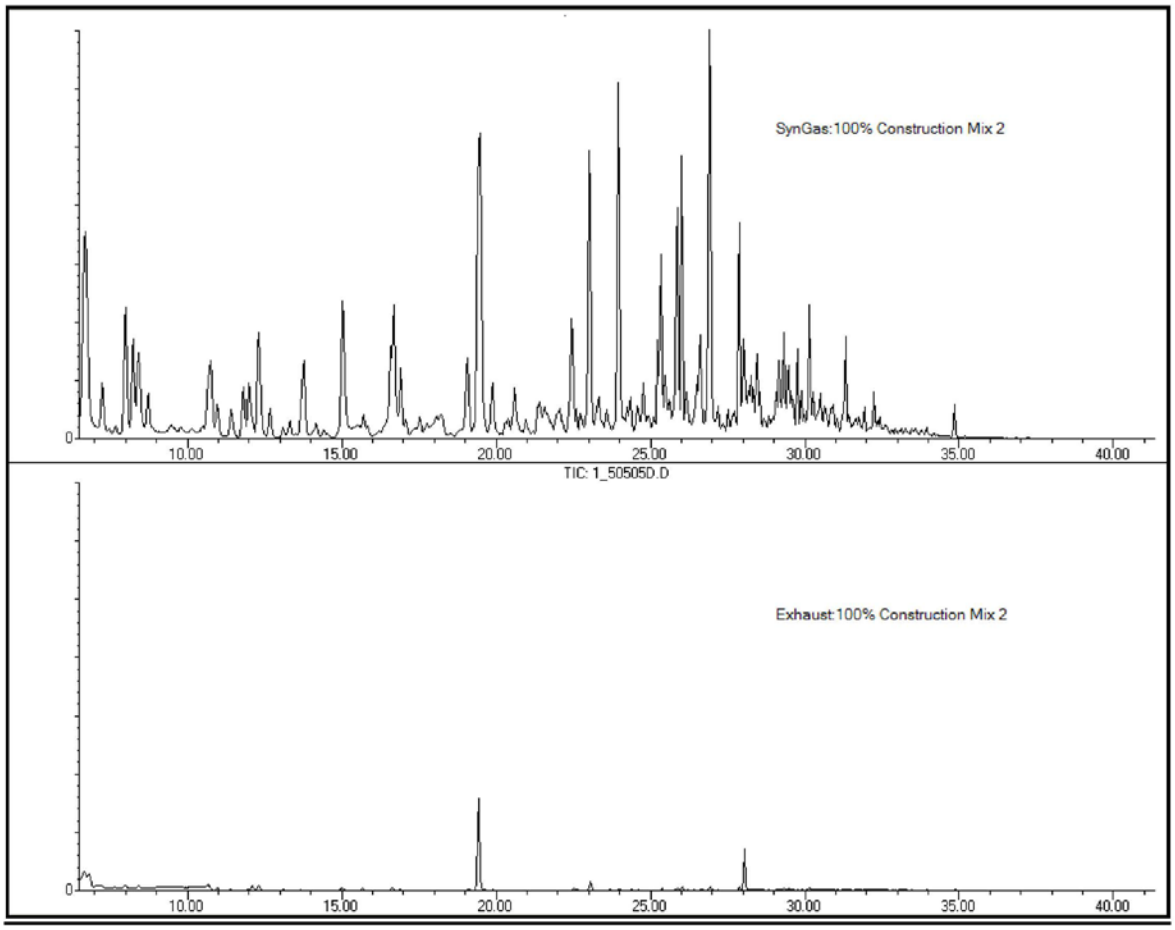

50% Food Mix 1 Total Ion Chromatograms

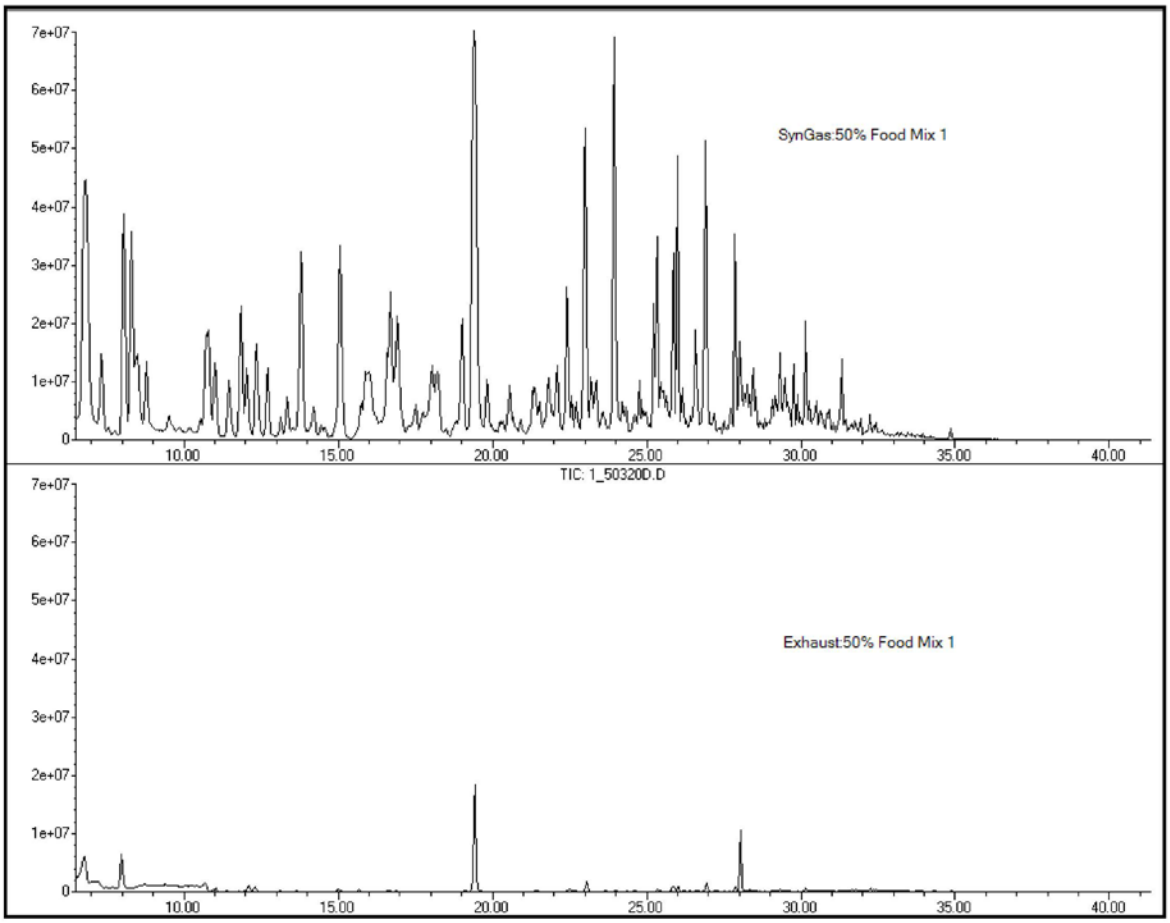

50% Food Mix 2 Total Ion Chromatograms

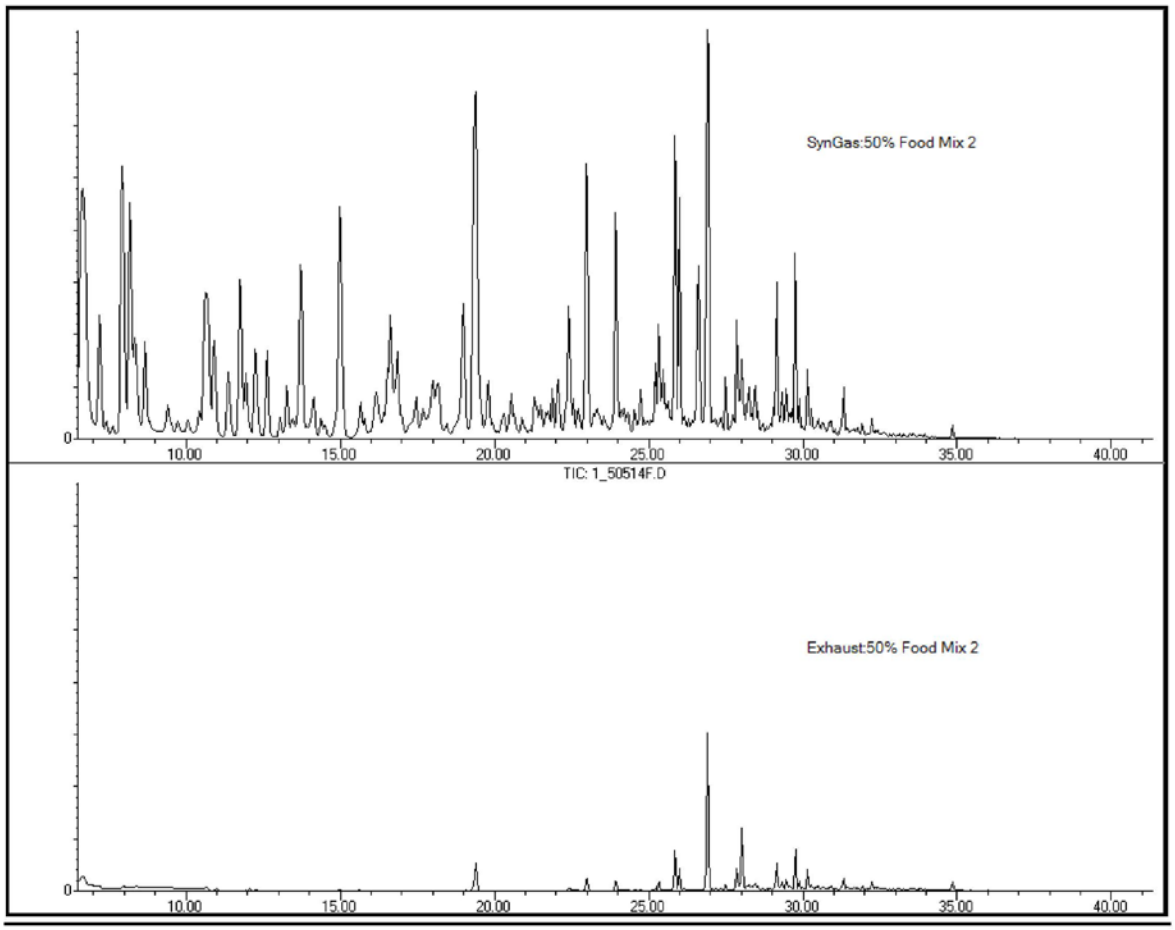

33% POL Mix 1 Total Ion Chromatograms

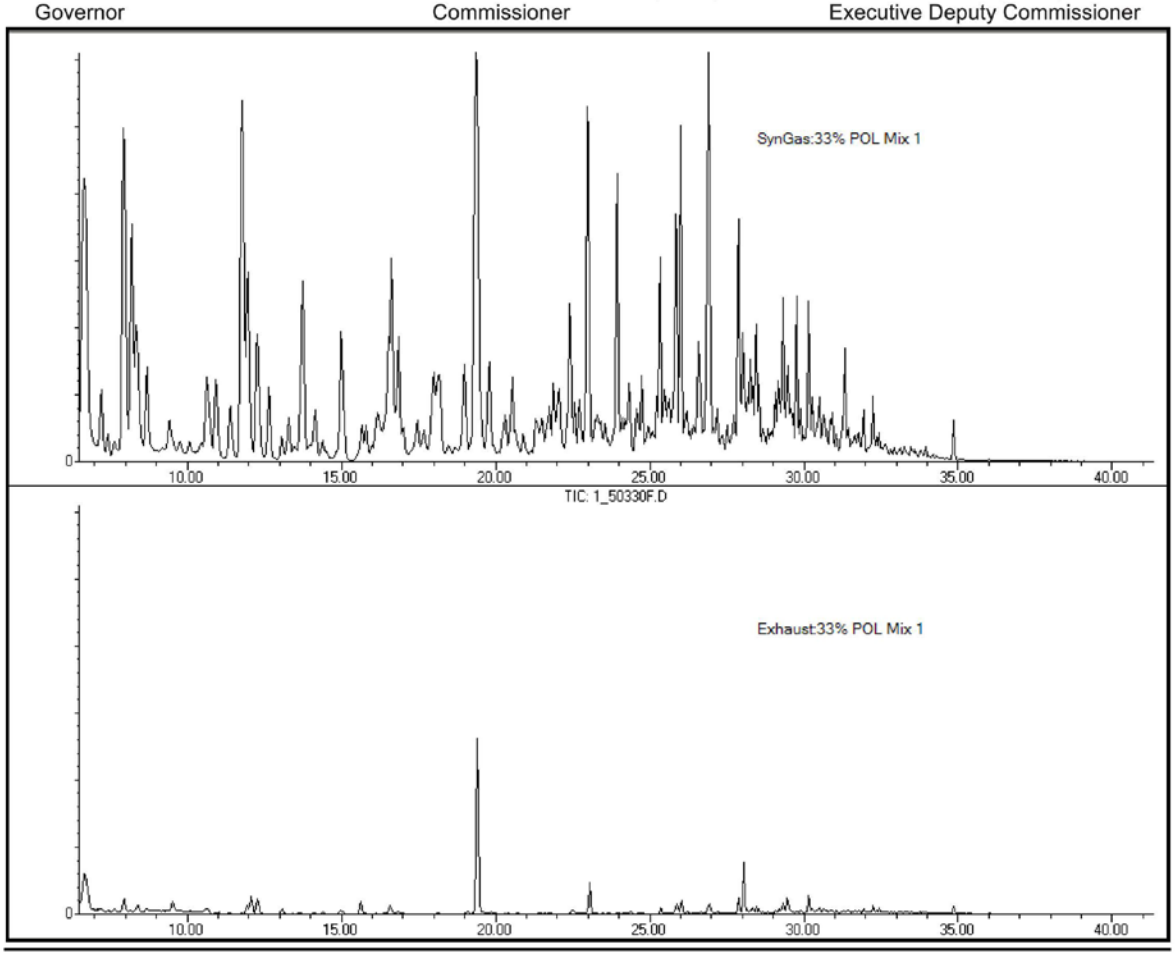

33% POL Mix 2 Total Ion Chromatograms

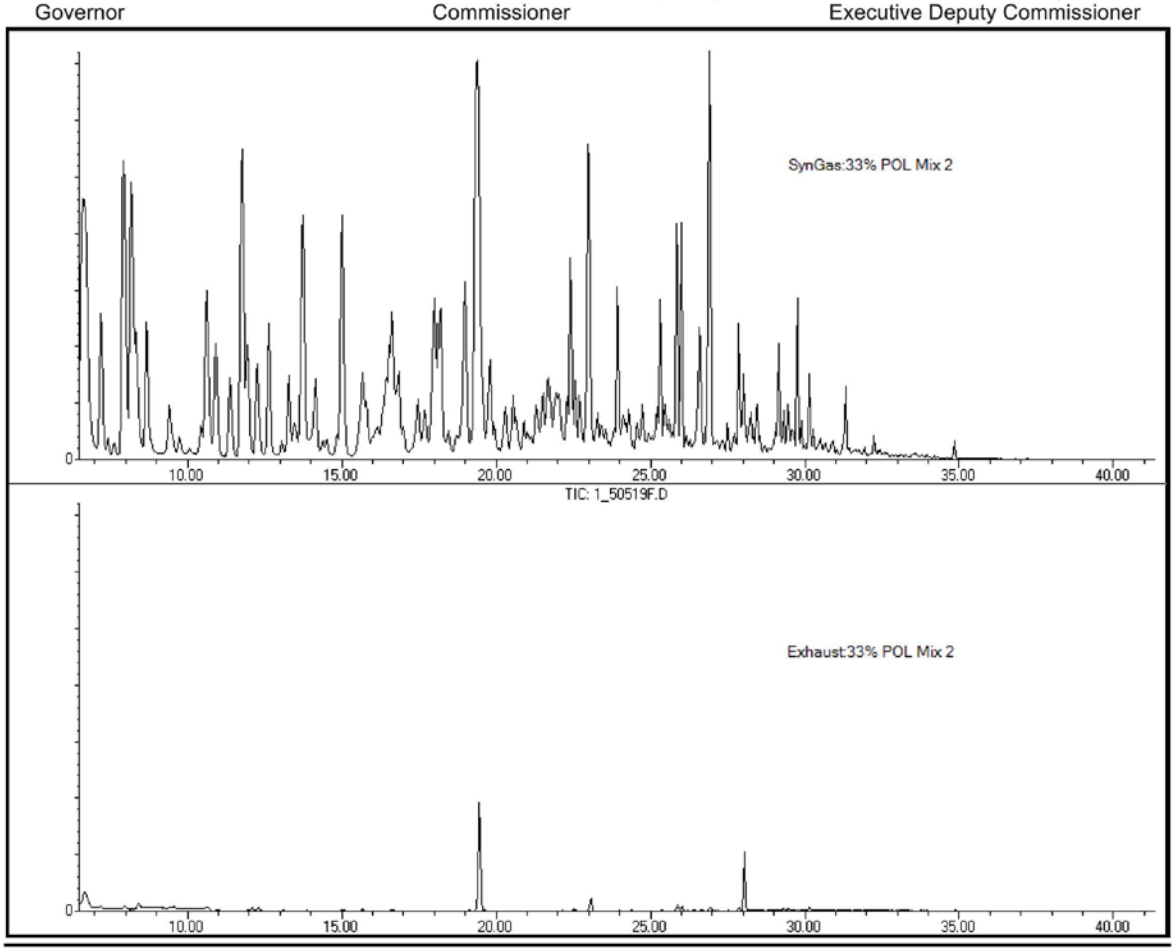
SynGas:33% POL Mix 2
0
10.00
15.00
20.00
25.00
30.00
35.00
40.00
TIC: 1_50519F.D
Exhaust:33% POL Mix 2
0
10.00
15.00
20.00
25.00
30.00
35.00
40.00

40% Tire Mix 1 Total Ion Chromatograms

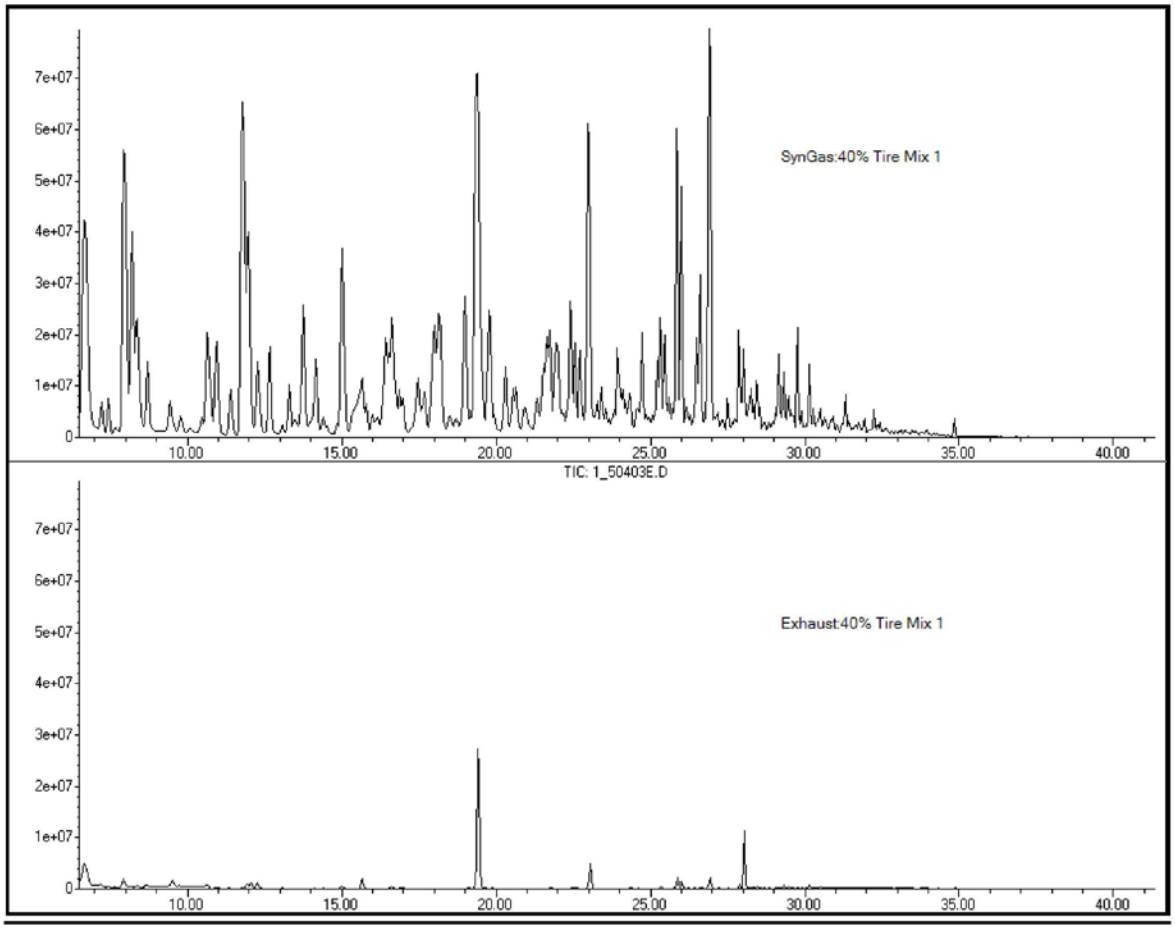

40% Tire Mix 2 Total Ion Chromatograms

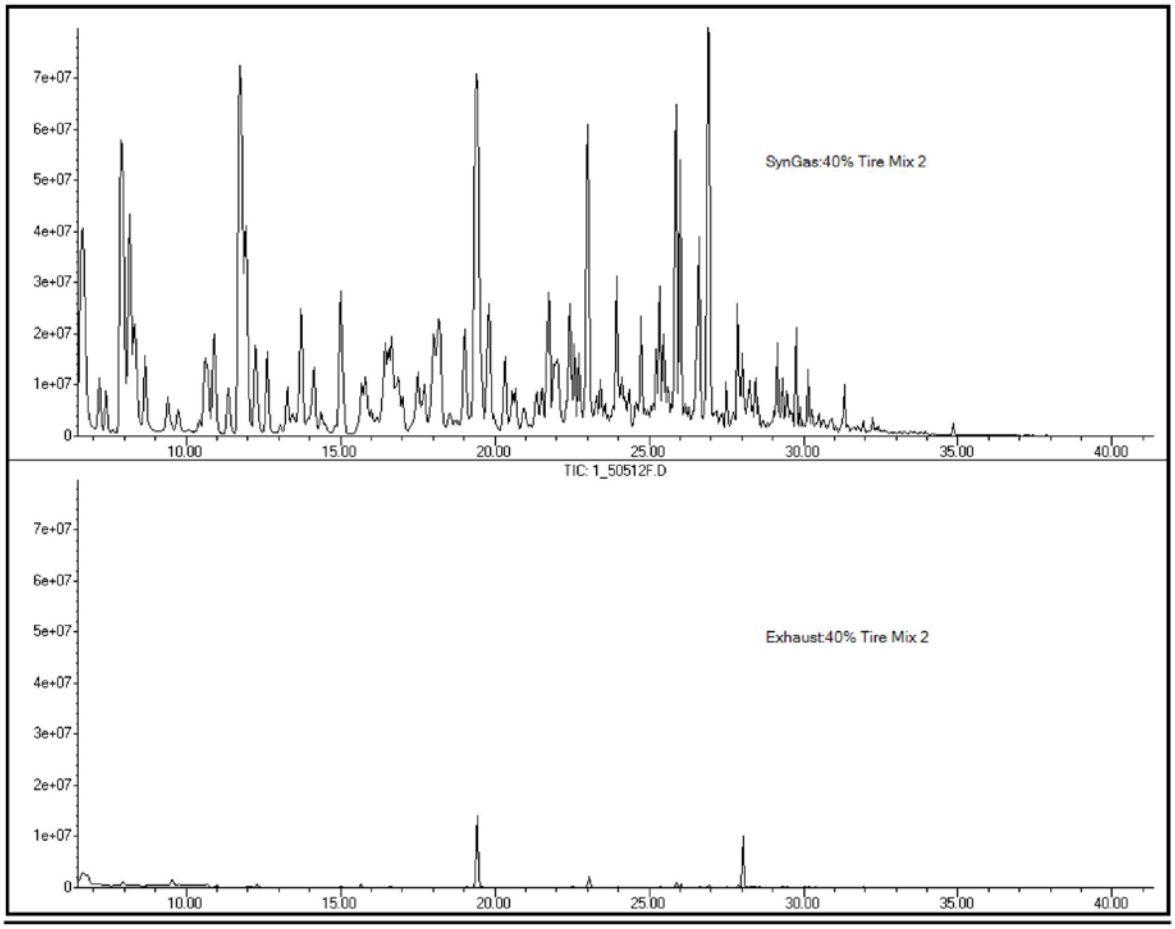

50% Plastics Mix 1 Total Ion Chromatograms

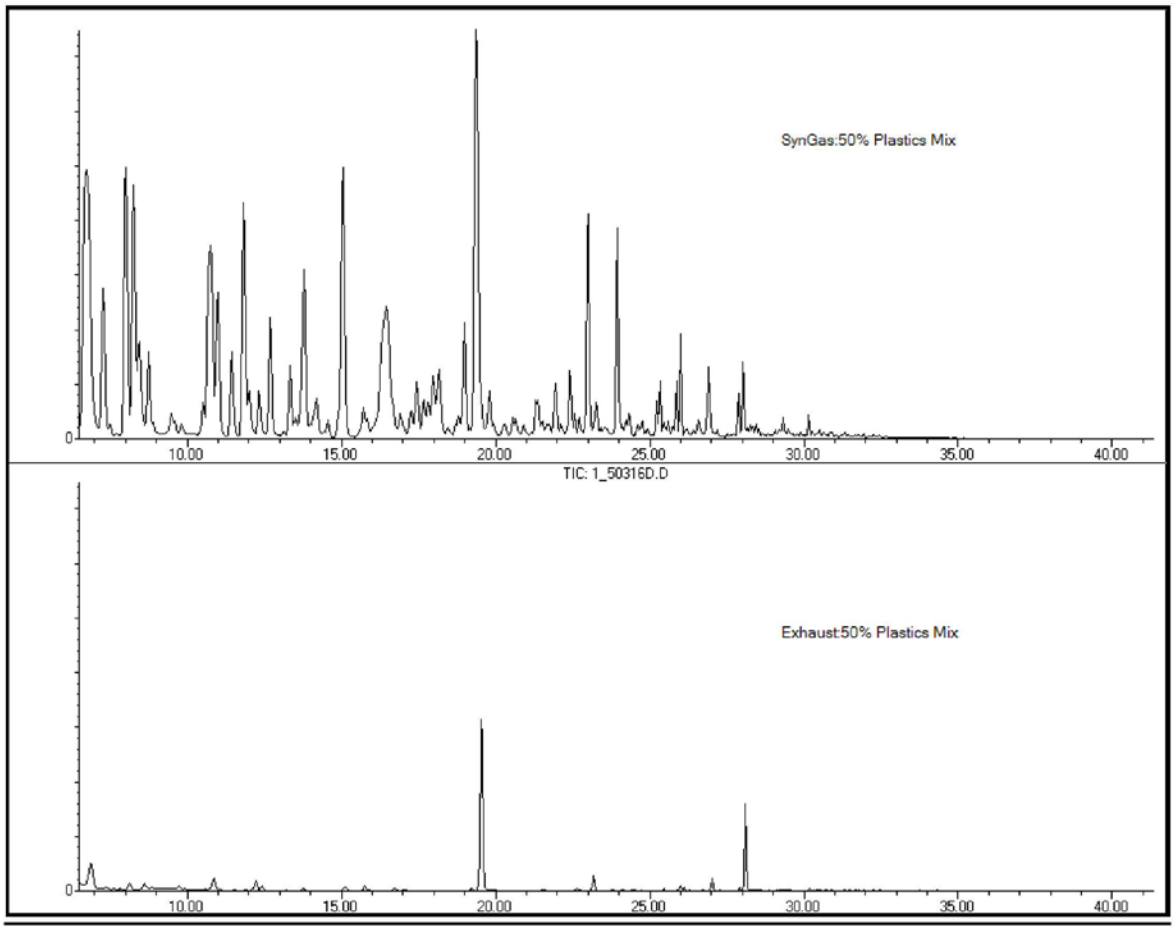

Diesel Fuel Reference Exhaust Total Ion Chromatograms

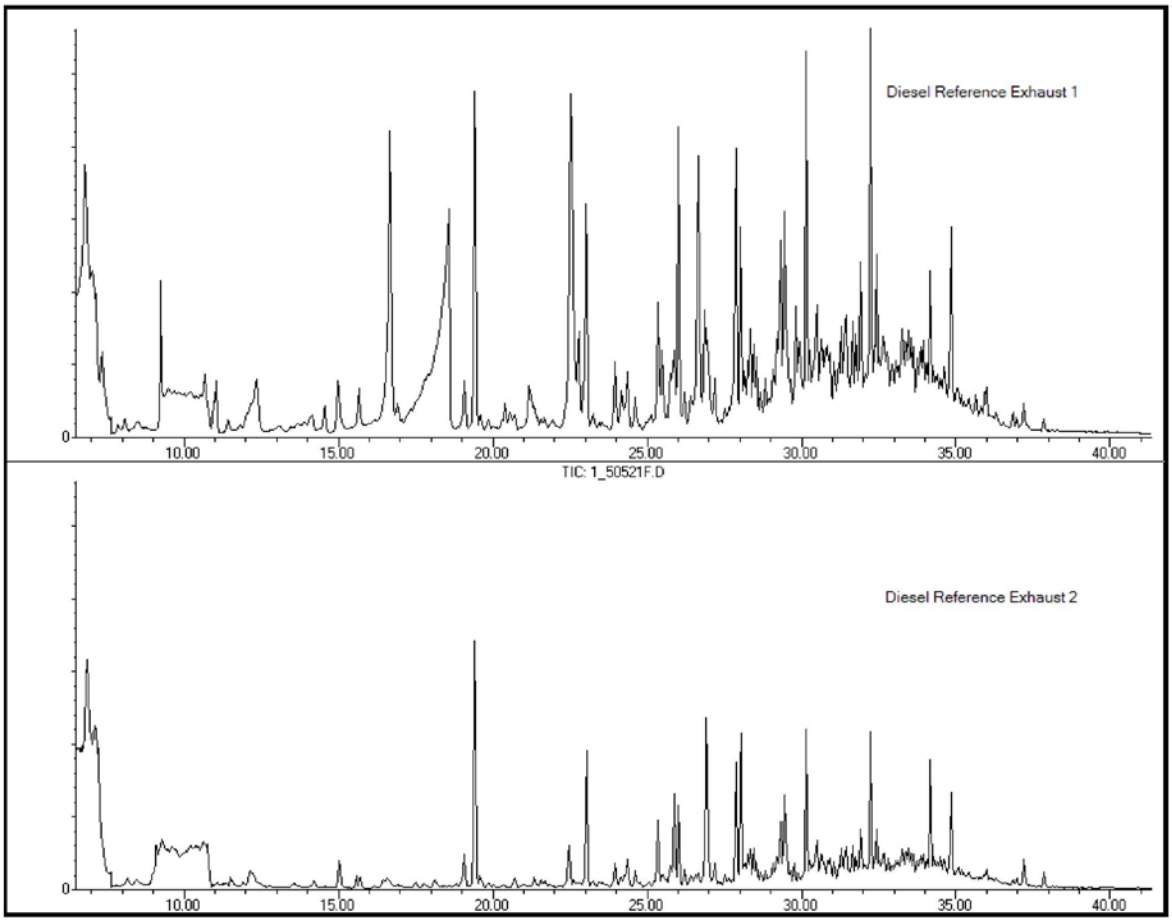

Summary

For all of the samples submitted for analysis, data collection began slightly after elution of C_3 due to it's co-elution with CO_2 and water vapor. It's likely the C_3 response is under reported by 15-20%. The Syngas chromatogram responses exhibit an n-alkane and olefin series (propane/propene, butane/butene, etc) to decane (C_{10}). Benzene and styrene are the two major contributors to the total aromatics in the samples. The cycloalkane series is a major contributor to the total response of the samples, which is similar to the volatile fraction of most commercial engine fuels. The target analytes accounted for approximately 45% of the total response of the Syngas samples.

The Syngas exhaust samples are relatively cleaner overall when compared to commercial diesel fuel exhaust samples. The presence of benzene and to some extent, styrene is very large in the Syngas exhaust samples, but the presence of the higher methyl substituted aromatic compounds is not present in the Syngas exhaust samples.

Visible diesel particulate matter (DPM) was observed in the engine exhaust stream at the time when exhaust samples were acquired. A particulate filter was not used at the exhaust sampling point, allowing DPM to freely enter the Summa container at the time of sampling. DPM is known to contain significant amounts of organic carbon, including benzene soluble fractions, which may have partially devolatilized out of the DPM and eluted as unburnt benzene in the diesel exhaust.

Appendix F Ash Analysis for Metals

TestAmerica
THE LEADER IN ENVIRONMENTAL TESTING

ANALYTICAL REPORT

Job Number: 480-89453-1

Job Description: Cerl Gasifier - Research Project

For:
U.S. Army Construction Engineering Resea
2902 Newmark Drive
Champaign, IL 61822

Attention: Mr. Stephen Cosper

Approved for release.
Joe V Giacomazza
Project Management Assistant II
11/11/2015 10:25 AM

Designee for
Brian J Fischer, Manager of Project Management
10 Hazelwood Drive, Amherst, NY, 14228-2298
(716)504-9835
brian.fischer@testamericainc.com
11/11/2015

The test results in this report meet all NELAP requirements for analytes for which accreditation is required or available. Any exceptions to the NELAP requirements are noted in this report. Pursuant to NELAP, this report may not be reproduced, except in full, without the written approval of the laboratory. All questions regarding this test report should be directed to the TestAmerica Project Manager who has signed this report.

TestAmerica Buffalo NELAC Certifications: CADPH 01169CA, FLDOH E87672, ILEPA 200003, KSDOH E-10187, LADEQ 30708, MDH 036-999-337, NHELAP 2973, NJDEP NY455, NHDOH 10026, ORELAP NY200003, PADEP 68-00281, TXCEQ T-104704412-10-1

TestAmerica Laboratories, Inc.
TestAmerica Buffalo 10 Hazelwood Drive, Amherst, NY 14228-2298
Tel (716) 691-2600 Fax (716) 691-7991 www.testamericainc.com

Table of Contents

Cover Title Page 1

Data Summaries 4

- Report Narrative 4
- Sample Summary 5
- Executive Summary 6
- Method Summary 8
- Method / Analyst Summary 9
- Sample Datasheets 10
- QC Data Summary 22
- Data Qualifiers 33
- QC Association Summary 34
- Lab Chronicle 37
- Reagent Traceability 42
- Certification Summary 50

Inorganic Sample Data 52

- Metals Data 52
  - Met Cover Page 53
  - Met Sample Data 55
  - Met QC Data 67
    - Met ICV/CCV 67
    - Met CRQL 81
    - Met Blanks 82
    - Met ICSA/ICSAB 94
    - Met MS/MSD/PDS 100
    - Met LCS/LCSD 105
    - Met Serial Dilution 110

Table of Contents

Met MDL 113

Met IECF 121

Met Linear Ranges 124

Met Preparation Log 127

Met Analysis Run Log 131

Met ICP/MS Int Stds 140

Met Prep Data 142

General Chemistry Data 156

Gen Chem Cover Page 157

Gen Chem MDL 158

Gen Chem Analysis Run Log 160

Gen Chem Prep Data 161

Subcontracted Data 162

Shipping and Receiving Documents 163

Client Chain of Custody 164

Sample Receipt Checklist 165

Job Narrative
480-89453-1

Receipt
The samples were received on 10/20/2015 9:20 AM; the samples arrived in good condition, properly preserved and, where required, on ice. The temperature of the cooler at receipt was 20.0º C.

Metals
Method(s) 7470A: The following samples were received outside the holding time for method 7470A (TCLP Mercury): A-01-020415-1600 (480-89453-1), A-01-031915-1600 (480-89453-2), A-01-040215-1505 (480-89453-3), A-01-050815-1600 (480-89453-4), (480-89453-A-4-G MS), (480-89453-A-4-H MSD) and (480-89453-A-4-F SD ^).

Method(s) 6010C: The following samples were diluted for TCLP Selenium due to the nature of the sample matrix: A-01-020415-1600 (480-89453-1), A-01-031915-1600 (480-89453-2), A-01-040215-1505 (480-89453-3), A-01-050815-1600 (480-89453-4), (480-89453-A-4-D MS ^), (480-89453-A-4-E MSD), (480-89453-A-4-C PDS) and (480-89453-A-4-C SD ^). Elevated reporting limits (RLs) are provided.

Method(s) 6010C: The following samples were received outside the holding time for method 6010C: A-01-020415-1600 (480-89453-1), A-01-031915-1600 (480-89453-2) and A-01-040215-1505 (480-89453-3).

Method(s) 7471B: The following samples were received outside the method holding time for 7471B: A-01-020415-1600 (480-89453-1), A-01-031915-1600 (480-89453-2), A-01-040215-1505 (480-89453-3), A-01-050815-1600 (480-89453-4), (480-89453-A-1-C MS), (480-89453-A-1-D MSD) and (480-89453-A-1-B SD ^).

No additional analytical or quality issues were noted, other than those described above or in the Definitions/Glossary page.

General Chemistry
No analytical or quality issues were noted, other than those described in the Definitions/Glossary page.

Organic Prep
Method(s) 1311: Due to the sample matrix and associated reaction to the extraction fluid, the laboratory was unable to perform the leaching procedure with the required 100g for the following samples: A-01-020415-1600 (480-89453-1), A-01-031915-1600 (480-89453-2), A-01-040215-1505 (480-89453-3) and A-01-050815-1600 (480-89453-4). The volume of leaching fluid was adjusted proportionally to maintain a 20:1 ratio of leaching fluid to weight of sample. Reporting limits (RLs) are not affected.

Method(s) 1311: The following samples were prepared outside of preparation holding time. : A-01-020415-1600 (480-89453-1), A-01-031915-1600 (480-89453-2), A-01-040215-1505 (480-89453-3) and A-01-050815-1600 (480-89453-4).

No additional analytical or quality issues were noted, other than those described above or in the Definitions/Glossary page.

SAMPLE SUMMARY

Client: U.S. Army Construction Engineering Resea

Job Number: 480-89453-1

Lab Sample ID	Client Sample ID	Client Matrix	Date/Time Sampled	Date/Time Received
480-89453-1	A-01-020415-1600	Solid	02/04/2015 1600	10/20/2015 0920
480-89453-2	A-01-031915-1600	Solid	03/19/2015 1600	10/20/2015 0920
480-89453-3	A-01-040215-1505	Solid	04/02/2015 1505	10/20/2015 0920
480-89453-4	A-01-050815-1600	Solid	05/08/2015 1600	10/20/2015 0920

EXECUTIVE SUMMARY - Detections

Client: U.S. Army Construction Engineering Resea

Job Number: 480-89453-1

Lab Sample ID Analyte	Client Sample ID	Result	Qualifier	Reporting Limit	Units	Method
480-89453-1	**A-01-020415-1600**					
Arsenic		3.6		0.54	mg/Kg	6020A
Barium		382		5.4	mg/Kg	6020A
Cadmium		0.065	J	0.54	mg/Kg	6020A
Chromium		663	B	1.1	mg/Kg	6020A
Silver		0.21	J	0.54	mg/Kg	6020A
Lead		0.70		0.54	mg/Kg	6020A
Percent Moisture		11		0.10	%	2540G
Percent Solids		89		0.10	%	2540G
TCLP						
Barium		3.2	H	1.0	mg/L	6010C
Lead		0.0040	J H	0.020	mg/L	6010C
480-89453-2	**A-01-031915-1600**					
Arsenic		3.3		0.48	mg/Kg	6020A
Barium		350		4.8	mg/Kg	6020A
Chromium		636	B	0.95	mg/Kg	6020A
Silver		0.15	J	0.48	mg/Kg	6020A
Lead		0.76		0.48	mg/Kg	6020A
Selenium		0.44	J	2.4	mg/Kg	6020A
Percent Moisture		0.00		0.10	%	2540G
Percent Solids		100		0.10	%	2540G
TCLP						
Barium		1.9	H	1.0	mg/L	6010C
Chromium		0.029	H	0.020	mg/L	6010C
480-89453-3	**A-01-040215-1505**					
Arsenic		3.3		0.50	mg/Kg	6020A
Barium		517		5.0	mg/Kg	6020A
Cadmium		0.042	J	0.50	mg/Kg	6020A
Chromium		337	B	0.99	mg/Kg	6020A
Silver		0.12	J	0.50	mg/Kg	6020A
Lead		1.0		0.50	mg/Kg	6020A
Percent Moisture		0.00		0.10	%	2540G
Percent Solids		100		0.10	%	2540G
TCLP						
Barium		3.7	H	1.0	mg/L	6010C
Chromium		0.015	J H	0.020	mg/L	6010C
Lead		0.0040	J H	0.020	mg/L	6010C

EXECUTIVE SUMMARY - Detections

Client: U.S. Army Construction Engineering Resea

Job Number: 480-89453-1

Lab Sample ID Analyte	Client Sample ID	Result	Qualifier	Reporting Limit	Units	Method
480-89453-4	**A-01-050815-1600**					
Arsenic		1.9		0.48	mg/Kg	6020A
Barium		351		4.8	mg/Kg	6020A
Chromium		197	B	0.97	mg/Kg	6020A
Silver		0.11	J	0.48	mg/Kg	6020A
Lead		2.5		0.48	mg/Kg	6020A
Mercury		0.011	J H	0.021	mg/Kg	7471B
Percent Moisture		0.79		0.10	%	2540G
Percent Solids		99		0.10	%	2540G
TCLP						
Barium		3.8	F1	1.0	mg/L	6010C
Lead		0.0074	J	0.020	mg/L	6010C

METHOD SUMMARY

Client: U.S. Army Construction Engineering Resea | Job Number: 480-89453-1

Description	Lab Location	Method	Preparation Method
Matrix: Solid			
Metals (ICP)	TAL BUF	SW846 6010C	
TCLP Extraction	TAL BUF		SW846 1311
Preparation, Total Metals	TAL BUF		SW846 3010A
TCLP Mercury	TAL BUF	SW846 7470A	
TCLP Extraction	TAL BUF		SW846 1311
Preparation, Mercury	TAL BUF		SW846 7470A
Mercury (CVAA)	TAL BUF	SW846 7471B	
Preparation, Mercury	TAL BUF		SW846 7471B
Metals (ICP/MS)	TAL PIT	SW846 6020A	
Preparation, Metals	TAL PIT		SW846 3050B
SM 2540G	TAL PIT	SM22 2540G	

Lab References:

TAL BUF = TestAmerica Buffalo

TAL PIT = TestAmerica Pittsburgh

Method References:

SM22 = Standard Methods For The Examination Of Water And Wastewater, 22nd Edition

SW846 = "Test Methods For Evaluating Solid Waste, Physical/Chemical Methods", Third Edition, November 1986 And Its Updates.

METHOD / ANALYST SUMMARY

Client: U.S. Army Construction Engineering Resea

Job Number: 480-89453-1

Method	Analyst	Analyst ID
SW846 6010C	Hawrysiak, Allison M	AMH
SW846 6020A	Reinheimer, Bill	WTR
SW846 7470A	Seger, Tiffany A	TAS
SW846 7471B	Seger, Tiffany A	TAS
SM22 2540G	Loheyde, Cheryl	CLL

Client: U.S. Army Construction Engineering Resea

Job Number: 480-89453-1

Client Sample ID: **A-01-020415-1600**

Lab Sample ID: 480-89453-1
Client Matrix: Solid

Date Sampled: 02/04/2015 1600
Date Received: 10/20/2015 0920

6010C Metals (ICP)-TCLP

Analysis Method:	6010C	Analysis Batch:	480-270880	Instrument ID:	ICAP2
Prep Method:	3010A	Prep Batch:	480-270374	Lab File ID:	I2102315B-4.asc
Dilution:	1.0	Leach Batch:	480-270052	Initial Weight/Volume:	50 mL
Analysis Date:	10/23/2015 2020			Final Weight/Volume:	50 mL
Prep Date:	10/22/2015 1130				
Leach Date:	10/21/2015 941				

Analyte	DryWt Corrected: N	Result (mg/L)	Qualifier	MDL	RL
Arsenic		ND	H	0.0056	0.015
Barium		3.2	H	0.10	1.0
Cadmium		ND	H	0.00050	0.0020
Chromium		ND	H	0.010	0.020
Lead		0.0040	J H	0.0030	0.020
Silver		ND	H	0.0017	0.0060

Analysis Method:	6010C	Analysis Batch:	480-271006	Instrument ID:	ICAP2
Prep Method:	3010A	Prep Batch:	480-270374	Lab File ID:	I2102415A-2.asc
Dilution:	5.0	Leach Batch:	480-270052	Initial Weight/Volume:	50 mL
Analysis Date:	10/24/2015 1053			Final Weight/Volume:	50 mL
Prep Date:	10/22/2015 1130				
Leach Date:	10/21/2015 941				

Analyte	DryWt Corrected: N	Result (mg/L)	Qualifier	MDL	RL
Selenium		ND	H	0.044	0.13

6020A Metals (ICP/MS)

Analysis Method:	6020A	Analysis Batch:	180-159963	Instrument ID:	X
Prep Method:	3050B	Prep Batch:	180-159790	Lab File ID:	X51109A.xml
Dilution:	5.0			Initial Weight/Volume:	00001.04 g
Analysis Date:	11/09/2015 2001			Final Weight/Volume:	100 mL
Prep Date:	11/09/2015 1244				

Analyte	DryWt Corrected: Y	Result (mg/Kg)	Qualifier	MDL	RL
Arsenic		3.6		0.097	0.54
Barium		382		0.058	5.4
Cadmium		0.065	J	0.038	0.54
Chromium		663	B	0.033	1.1
Silver		0.21	J	0.021	0.54
Lead		0.70		0.020	0.54
Selenium		ND		0.27	2.7

7470A TCLP Mercury-TCLP

Analysis Method:	7470A	Analysis Batch:	480-270525	Instrument ID:	LEEMAN2
Prep Method:	7470A	Prep Batch:	480-270385	Lab File ID:	H10225TC.PRN
Dilution:	1.0	Leach Batch:	480-270052	Initial Weight/Volume:	30 mL
Analysis Date:	10/22/2015 1702			Final Weight/Volume:	50 mL
Prep Date:	10/22/2015 1215				

Client: U.S. Army Construction Engineering Resea

Job Number: 480-89453-1

Client Sample ID: **A-01-020415-1600**

Lab Sample ID: 480-89453-1
Client Matrix: Solid

Date Sampled: 02/04/2015 1600
Date Received: 10/20/2015 0920

7470A TCLP Mercury-TCLP

Leach Date: 10/21/2015 941

Analyte	DryWt Corrected: N	Result (mg/L)	Qualifier	MDL	RL
Mercury		ND	H	0.00012	0.00020

7471B Mercury (CVAA)

Analysis Method:	7471B	Analysis Batch:	480-270289	Instrument ID:	LEEMAN2
Prep Method:	7471B	Prep Batch:	480-270135	Lab File ID:	H10215S1.PRN
Dilution:	1.0			Initial Weight/Volume:	+0.5970 g
Analysis Date:	10/21/2015 1720			Final Weight/Volume:	50 mL
Prep Date:	10/21/2015 1500				

Analyte	DryWt Corrected: Y	Result (mg/Kg)	Qualifier	MDL	RL
Mercury		ND	H	0.0091	0.022

Client: U.S. Army Construction Engineering Resea

Job Number: 480-89453-1

Client Sample ID: **A-01-031915-1600**

Lab Sample ID: 480-89453-2
Client Matrix: Solid

Date Sampled: 03/19/2015 1600
Date Received: 10/20/2015 0920

6010C Metals (ICP)-TCLP

Analysis Method:	6010C	Analysis Batch:	480-270880	Instrument ID:	ICAP2
Prep Method:	3010A	Prep Batch:	480-270374	Lab File ID:	I2102315B-4.asc
Dilution:	1.0	Leach Batch:	480-270052	Initial Weight/Volume:	50 mL
Analysis Date:	10/23/2015 2023			Final Weight/Volume:	50 mL
Prep Date:	10/22/2015 1130				
Leach Date:	10/21/2015 941				

Analyte	DryWt Corrected: N	Result (mg/L)	Qualifier	MDL	RL
Arsenic		ND	H	0.0056	0.015
Barium		1.9	H	0.10	1.0
Cadmium		ND	H	0.00050	0.0020
Chromium		0.029	H	0.010	0.020
Lead		ND	H	0.0030	0.020
Silver		ND	H	0.0017	0.0060

Analysis Method:	6010C	Analysis Batch:	480-271006	Instrument ID:	ICAP2
Prep Method:	3010A	Prep Batch:	480-270374	Lab File ID:	I2102415A-2.asc
Dilution:	5.0	Leach Batch:	480-270052	Initial Weight/Volume:	50 mL
Analysis Date:	10/24/2015 1106			Final Weight/Volume:	50 mL
Prep Date:	10/22/2015 1130				
Leach Date:	10/21/2015 941				

Analyte	DryWt Corrected: N	Result (mg/L)	Qualifier	MDL	RL
Selenium		ND	H	0.044	0.13

6020A Metals (ICP/MS)

Analysis Method:	6020A	Analysis Batch:	180-159963	Instrument ID:	X
Prep Method:	3050B	Prep Batch:	180-159790	Lab File ID:	X51109A.xml
Dilution:	5.0			Initial Weight/Volume:	00001.05 g
Analysis Date:	11/09/2015 2006			Final Weight/Volume:	100 mL
Prep Date:	11/09/2015 1244				

Analyte	DryWt Corrected: Y	Result (mg/Kg)	Qualifier	MDL	RL
Arsenic		3.3		0.086	0.48
Barium		350		0.051	4.8
Cadmium		ND		0.033	0.48
Chromium		636	B	0.029	0.95
Silver		0.15	J	0.019	0.48
Lead		0.76		0.018	0.48
Selenium		0.44	J	0.24	2.4

7470A TCLP Mercury-TCLP

Analysis Method:	7470A	Analysis Batch:	480-270525	Instrument ID:	LEEMAN2
Prep Method:	7470A	Prep Batch:	480-270385	Lab File ID:	H10225TC.PRN
Dilution:	1.0	Leach Batch:	480-270052	Initial Weight/Volume:	30 mL
Analysis Date:	10/22/2015 1704			Final Weight/Volume:	50 mL
Prep Date:	10/22/2015 1215				

Client: U.S. Army Construction Engineering Resea

Job Number: 480-89453-1

Client Sample ID: **A-01-031915-1600**

Lab Sample ID: 480-89453-2
Client Matrix: Solid

Date Sampled: 03/19/2015 1600
Date Received: 10/20/2015 0920

7470A TCLP Mercury-TCLP

Leach Date: 10/21/2015 941

Analyte	DryWt Corrected: N	Result (mg/L)	Qualifier	MDL	RL
Mercury		ND	H	0.00012	0.00020

7471B Mercury (CVAA)

Analysis Method:	7471B	Analysis Batch:	480-270289	Instrument ID:	LEEMAN2
Prep Method:	7471B	Prep Batch:	480-270135	Lab File ID:	H10215S1.PRN
Dilution:	1.0			Initial Weight/Volume:	+0.5845 g
Analysis Date:	10/21/2015 1726			Final Weight/Volume:	50 mL
Prep Date:	10/21/2015 1500				

Analyte	DryWt Corrected: Y	Result (mg/Kg)	Qualifier	MDL	RL
Mercury		ND	H	0.0083	0.021

Client: U.S. Army Construction Engineering Resea

Job Number: 480-89453-1

Client Sample ID: **A-01-040215-1505**

Lab Sample ID: 480-89453-3
Client Matrix: Solid

Date Sampled: 04/02/2015 1505
Date Received: 10/20/2015 0920

6010C Metals (ICP)-TCLP

Analysis Method:	6010C	Analysis Batch:	480-270880	Instrument ID:	ICAP2
Prep Method:	3010A	Prep Batch:	480-270374	Lab File ID:	I2102315B-4.asc
Dilution:	1.0	Leach Batch:	480-270052	Initial Weight/Volume:	50 mL
Analysis Date:	10/23/2015 2027			Final Weight/Volume:	50 mL
Prep Date:	10/22/2015 1130				
Leach Date:	10/21/2015 941				

Analyte	DryWt Corrected: N	Result (mg/L)	Qualifier	MDL	RL
Arsenic		ND	H	0.0056	0.015
Barium		3.7	H	0.10	1.0
Cadmium		ND	H	0.00050	0.0020
Chromium		0.015	J H	0.010	0.020
Lead		0.0040	J H	0.0030	0.020
Silver		ND	H	0.0017	0.0060

Analysis Method:	6010C	Analysis Batch:	480-271006	Instrument ID:	ICAP2
Prep Method:	3010A	Prep Batch:	480-270374	Lab File ID:	I2102415A-2.asc
Dilution:	5.0	Leach Batch:	480-270052	Initial Weight/Volume:	50 mL
Analysis Date:	10/24/2015 1109			Final Weight/Volume:	50 mL
Prep Date:	10/22/2015 1130				
Leach Date:	10/21/2015 941				

Analyte	DryWt Corrected: N	Result (mg/L)	Qualifier	MDL	RL
Selenium		ND	H	0.044	0.13

6020A Metals (ICP/MS)

Analysis Method:	6020A	Analysis Batch:	180-159963	Instrument ID:	X
Prep Method:	3050B	Prep Batch:	180-159790	Lab File ID:	X51109A.xml
Dilution:	5.0			Initial Weight/Volume:	00001.01 g
Analysis Date:	11/09/2015 2011			Final Weight/Volume:	100 mL
Prep Date:	11/09/2015 1244				

Analyte	DryWt Corrected: Y	Result (mg/Kg)	Qualifier	MDL	RL
Arsenic		3.3		0.090	0.50
Barium		517		0.053	5.0
Cadmium		0.042	J	0.035	0.50
Chromium		337	B	0.030	0.99
Silver		0.12	J	0.019	0.50
Lead		1.0		0.019	0.50
Selenium		ND		0.25	2.5

7470A TCLP Mercury-TCLP

Analysis Method:	7470A	Analysis Batch:	480-270525	Instrument ID:	LEEMAN2
Prep Method:	7470A	Prep Batch:	480-270385	Lab File ID:	H10225TC.PRN
Dilution:	1.0	Leach Batch:	480-270052	Initial Weight/Volume:	30 mL
Analysis Date:	10/22/2015 1705			Final Weight/Volume:	50 mL
Prep Date:	10/22/2015 1215				

Client: U.S. Army Construction Engineering Resea

Job Number: 480-89453-1

Client Sample ID: **A-01-040215-1505**

Lab Sample ID: 480-89453-3
Client Matrix: Solid

Date Sampled: 04/02/2015 1505
Date Received: 10/20/2015 0920

7470A TCLP Mercury-TCLP

Leach Date: 10/21/2015 941

Analyte	DryWt Corrected: N	Result (mg/L)	Qualifier	MDL	RL
Mercury		ND	H	0.00012	0.00020

7471B Mercury (CVAA)

Analysis Method:	7471B	Analysis Batch:	480-270289	Instrument ID:	LEEMAN2
Prep Method:	7471B	Prep Batch:	480-270135	Lab File ID:	H10215S1.PRN
Dilution:	1.0			Initial Weight/Volume:	+0.5921 g
Analysis Date:	10/21/2015 1729			Final Weight/Volume:	50 mL
Prep Date:	10/21/2015 1500				

Analyte	DryWt Corrected: Y	Result (mg/Kg)	Qualifier	MDL	RL
Mercury		ND	H	0.0082	0.020

Client: U.S. Army Construction Engineering Resea

Job Number: 480-89453-1

Client Sample ID: **A-01-050815-1600**

Lab Sample ID: 480-89453-4
Client Matrix: Solid

Date Sampled: 05/08/2015 1600
Date Received: 10/20/2015 0920

6010C Metals (ICP)-TCLP

Analysis Method:	6010C	Analysis Batch:	480-270880	Instrument ID:	ICAP2
Prep Method:	3010A	Prep Batch:	480-270374	Lab File ID:	I2102315B-4.asc
Dilution:	1.0	Leach Batch:	480-270052	Initial Weight/Volume:	50 mL
Analysis Date:	10/23/2015 2040			Final Weight/Volume:	50 mL
Prep Date:	10/22/2015 1130				
Leach Date:	10/21/2015 941				

Analyte	DryWt Corrected: N	Result (mg/L)	Qualifier	MDL	RL
Arsenic		ND		0.0056	0.015
Barium		3.8	F1	0.10	1.0
Cadmium		ND		0.00050	0.0020
Chromium		ND		0.010	0.020
Lead		0.0074	J	0.0030	0.020
Silver		ND		0.0017	0.0060

Analysis Method:	6010C	Analysis Batch:	480-271006	Instrument ID:	ICAP2
Prep Method:	3010A	Prep Batch:	480-270374	Lab File ID:	I2102415A-2.asc
Dilution:	5.0	Leach Batch:	480-270052	Initial Weight/Volume:	50 mL
Analysis Date:	10/24/2015 1113			Final Weight/Volume:	50 mL
Prep Date:	10/22/2015 1130				
Leach Date:	10/21/2015 941				

Analyte	DryWt Corrected: N	Result (mg/L)	Qualifier	MDL	RL
Selenium		ND		0.044	0.13

6020A Metals (ICP/MS)

Analysis Method:	6020A	Analysis Batch:	180-159963	Instrument ID:	X
Prep Method:	3050B	Prep Batch:	180-159790	Lab File ID:	X51109A.xml
Dilution:	5.0			Initial Weight/Volume:	00001.04 g
Analysis Date:	11/09/2015 2016			Final Weight/Volume:	100 mL
Prep Date:	11/09/2015 1244				

Analyte	DryWt Corrected: Y	Result (mg/Kg)	Qualifier	MDL	RL
Arsenic		1.9		0.088	0.48
Barium		351		0.052	4.8
Cadmium		ND		0.034	0.48
Chromium		197	B	0.030	0.97
Silver		0.11	J	0.019	0.48
Lead		2.5		0.018	0.48
Selenium		ND		0.24	2.4

7470A TCLP Mercury-TCLP

Analysis Method:	7470A	Analysis Batch:	480-270525	Instrument ID:	LEEMAN2
Prep Method:	7470A	Prep Batch:	480-270385	Lab File ID:	H10225TC.PRN
Dilution:	1.0	Leach Batch:	480-270052	Initial Weight/Volume:	30 mL
Analysis Date:	10/22/2015 1708			Final Weight/Volume:	50 mL
Prep Date:	10/22/2015 1215				

Client: U.S. Army Construction Engineering Resea

Job Number: 480-89453-1

Client Sample ID: **A-01-050815-1600**

Lab Sample ID: 480-89453-4
Client Matrix: Solid

Date Sampled: 05/08/2015 1600
Date Received: 10/20/2015 0920

7470A TCLP Mercury-TCLP

Leach Date: 10/21/2015 941

Analyte	DryWt Corrected: N	Result (mg/L)	Qualifier	MDL	RL
Mercury		ND	H	0.00012	0.00020

7471B Mercury (CVAA)

Analysis Method:	7471B	Analysis Batch:	480-270289	Instrument ID:	LEEMAN2
Prep Method:	7471B	Prep Batch:	480-270135	Lab File ID:	H10215S1.PRN
Dilution:	1.0			Initial Weight/Volume:	+0.5874 g
Analysis Date:	10/21/2015 1730			Final Weight/Volume:	50 mL
Prep Date:	10/21/2015 1500				

Analyte	DryWt Corrected: Y	Result (mg/Kg)	Qualifier	MDL	RL
Mercury		0.011	J H	0.0083	0.021

General Chemistry

Client Sample ID: **A-01-020415-1600**

Lab Sample ID: 480-89453-1
Client Matrix: Solid

Date Sampled: 02/04/2015 1600
Date Received: 10/20/2015 0920

Analyte	Result	Qual	Units	RL	RL	Dil	Method
Percent Moisture	11		%	0.10	0.10	1.0	2540G
Analysis Batch: 180-158347	Analysis Date: 10/27/2015 0835						DryWt Corrected: N
Percent Solids	89		%	0.10	0.10	1.0	2540G
Analysis Batch: 180-158347	Analysis Date: 10/27/2015 0835						DryWt Corrected: N

General Chemistry

Client Sample ID: **A-01-031915-1600**

Lab Sample ID: 480-89453-2
Client Matrix: Solid

Date Sampled: 03/19/2015 1600
Date Received: 10/20/2015 0920

Analyte	Result	Qual	Units	RL	RL	Dil	Method
Percent Moisture	0.00		%	0.10	0.10	1.0	2540G
Analysis Batch: 180-158347	Analysis Date: 10/27/2015 0835						DryWt Corrected: N
Percent Solids	100		%	0.10	0.10	1.0	2540G
Analysis Batch: 180-158347	Analysis Date: 10/27/2015 0835						DryWt Corrected: N

General Chemistry

Client Sample ID: **A-01-040215-1505**

Lab Sample ID: 480-89453-3

Client Matrix: Solid

Date Sampled: 04/02/2015 1505

Date Received: 10/20/2015 0920

Analyte	Result	Qual	Units	RL	RL	Dil	Method
Percent Moisture	0.00		%	0.10	0.10	1.0	2540G
Analysis Batch: 180-158347	Analysis Date: 10/27/2015 0835						DryWt Corrected: N
Percent Solids	100		%	0.10	0.10	1.0	2540G
Analysis Batch: 180-158347	Analysis Date: 10/27/2015 0835						DryWt Corrected: N

Client: U.S. Army Construction Engineering Resea

Job Number: 480-89453-1

General Chemistry

Client Sample ID: **A-01-050815-1600**

Lab Sample ID: 480-89453-4
Client Matrix: Solid

Date Sampled: 05/08/2015 1600
Date Received: 10/20/2015 0920

Analyte	Result	Qual	Units	RL	RL	Dil	Method
Percent Moisture	0.79		%	0.10	0.10	1.0	2540G
Analysis Batch: 180-158347	Analysis Date: 10/27/2015 0835						DryWt Corrected: N
Percent Solids	99		%	0.10	0.10	1.0	2540G
Analysis Batch: 180-158347	Analysis Date: 10/27/2015 0835						DryWt Corrected: N

Client: U.S. Army Construction Engineering Resea

Job Number: 480-89453-1

TCLP SPLPW Leachate Blank - Batch: 480-270374

Method: 6010C
Preparation: 3010A
TCLP

Lab Sample ID:	LB2 480-270052/1-C	Analysis Batch:	480-270880	Instrument ID:	ICAP2
Client Matrix:	Solid	Prep Batch:	480-270374	Lab File ID:	I2102315B-4.asc
Dilution:	1.0	Leach Batch:	480-270052	Initial Weight/Volume:	50 mL
Analysis Date:	10/23/2015 2010	Units:	mg/L	Final Weight/Volume:	50 mL
Prep Date:	10/22/2015 1130				
Leach Date:	10/21/2015 0941				

Analyte	Result	Qual	MDL	RL
Arsenic	ND		0.0056	0.015
Barium	ND		0.10	1.0
Cadmium	ND		0.00050	0.0020
Chromium	ND		0.010	0.020
Lead	ND		0.0030	0.020
Selenium	ND		0.0087	0.025
Silver	ND		0.0017	0.0060

Method Blank - Batch: 480-270374

Method: 6010C
Preparation: 3010A

Lab Sample ID:	MB 480-270374/2-A	Analysis Batch:	480-270880	Instrument ID:	ICAP2
Client Matrix:	Water	Prep Batch:	480-270374	Lab File ID:	I2102315B-4.asc
Dilution:	1.0	Leach Batch:	N/A	Initial Weight/Volume:	50 mL
Analysis Date:	10/23/2015 2014	Units:	mg/L	Final Weight/Volume:	50 mL
Prep Date:	10/22/2015 1130				
Leach Date:	N/A				

Analyte	Result	Qual	MDL	RL
Arsenic	ND		0.0056	0.015
Barium	ND		0.10	1.0
Cadmium	ND		0.00050	0.0020
Chromium	ND		0.010	0.020
Lead	ND		0.0030	0.020
Selenium	ND		0.0087	0.025
Silver	ND		0.0017	0.0060

Client: U.S. Army Construction Engineering Resea

Job Number: 480-89453-1

Lab Control Sample - Batch: 480-270374

Method: 6010C
Preparation: 3010A

Lab Sample ID:	LCS 480-270374/3-A	Analysis Batch:	480-270880	Instrument ID:	ICAP2
Client Matrix:	Water	Prep Batch:	480-270374	Lab File ID:	I2102315B-4.asc
Dilution:	1.0	Leach Batch:	N/A	Initial Weight/Volume:	50 mL
Analysis Date:	10/23/2015 2017	Units:	mg/L	Final Weight/Volume:	50 mL
Prep Date:	10/22/2015 1130				
Leach Date:	N/A				

Analyte	Spike Amount	Result	% Rec.	Limit	Qual
Arsenic	1.00	1.07	107	80 - 120	
Barium	1.00	0.973	97	80 - 120	J
Cadmium	1.00	1.02	102	80 - 120	
Chromium	1.00	0.982	98	80 - 120	
Lead	1.00	0.980	98	80 - 120	
Selenium	1.00	1.09	109	80 - 120	
Silver	1.00	1.04	104	80 - 120	

Post Digestion Spike - Batch: 480-270374

Method: 6010C
Preparation: 3010A
TCLP

Lab Sample ID:	480-89453-4	Analysis Batch:	480-270880	Instrument ID:	ICAP2
Client Matrix:	Solid	Prep Batch:	480-270374	Lab File ID:	I2102315B-4.asc
Dilution:	1.0	Leach Batch:	480-270052	Initial Weight/Volume:	50 mL
Analysis Date:	10/23/2015 2047	Units:	mg/L	Final Weight/Volume:	50 mL
Prep Date:	10/22/2015 1130				
Leach Date:	10/21/2015 0941				

Analyte	Sample Result/Qual		Spike Amount	Result	% Rec.	Limit	Qual
Arsenic	ND		1.00	1.18	118	80 - 120	
Barium	3.8		1.00	4.74	96	80 - 120	
Cadmium	ND		1.00	1.13	113	80 - 120	
Chromium	ND		1.00	0.989	99	80 - 120	
Lead	0.0074	J	1.00	1.03	102	80 - 120	
Silver	ND		1.00	1.17	117	80 - 120	

Post Digestion Spike - Batch: 480-270374

Method: 6010C
Preparation: 3010A
TCLP

Lab Sample ID:	480-89453-4	Analysis Batch:	480-271006	Instrument ID:	ICAP2
Client Matrix:	Solid	Prep Batch:	480-270374	Lab File ID:	I2102415A-2.asc
Dilution:	5.0	Leach Batch:	480-270052	Initial Weight/Volume:	50 mL
Analysis Date:	10/24/2015 1119	Units:	mg/L	Final Weight/Volume:	50 mL
Prep Date:	10/22/2015 1130				
Leach Date:	10/21/2015 0941				

Analyte	Sample Result/Qual	Spike Amount	Result	% Rec.	Limit	Qual
Selenium	ND	5.00	5.10	102	80 - 120	

Client: U.S. Army Construction Engineering Resea

Job Number: 480-89453-1

Matrix Spike/
Matrix Spike Duplicate Recovery Report - Batch: 480-270374

Method: 6010C
Preparation: 3010A
TCLP

MS Lab Sample ID:	480-89453-4	Analysis Batch:	480-270880	Instrument ID:	ICAP2
Client Matrix:	Solid	Prep Batch:	480-270374	Lab File ID:	I2102315B-4.asc
Dilution:	1.0	Leach Batch:	480-270052	Initial Weight/Volume:	50 mL
Analysis Date:	10/23/2015 2050			Final Weight/Volume:	50 mL
Prep Date:	10/22/2015 1130				
Leach Date:	10/21/2015 0941				

MSD Lab Sample ID:	480-89453-4	Analysis Batch:	480-270880	Instrument ID:	ICAP2
Client Matrix:	Solid	Prep Batch:	480-270374	Lab File ID:	I2102315B-4.asc
Dilution:	1.0	Leach Batch:	480-270052	Initial Weight/Volume:	50 mL
Analysis Date:	10/23/2015 2053			Final Weight/Volume:	50 mL
Prep Date:	10/22/2015 1130				
Leach Date:	10/21/2015 0941				

	% Rec.						
Analyte	MS	MSD	Limit	RPD	RPD Limit	MS Qual	MSD Qual
Arsenic	119	112	75 - 125	6	20		
Barium	100	71	75 - 125	6	20		F1
Cadmium	113	107	75 - 125	6	20		
Chromium	100	94	75 - 125	6	20		
Lead	103	97	75 - 125	6	20		
Silver	117	110	75 - 125	6	20		

Matrix Spike/
Matrix Spike Duplicate Recovery Report - Batch: 480-270374

Method: 6010C
Preparation: 3010A
TCLP

MS Lab Sample ID:	480-89453-4	Analysis Batch:	480-271006	Instrument ID:	ICAP2
Client Matrix:	Solid	Prep Batch:	480-270374	Lab File ID:	I2102415A-2.asc
Dilution:	5.0	Leach Batch:	480-270052	Initial Weight/Volume:	50 mL
Analysis Date:	10/24/2015 1123			Final Weight/Volume:	50 mL
Prep Date:	10/22/2015 1130				
Leach Date:	10/21/2015 0941				

MSD Lab Sample ID:	480-89453-4	Analysis Batch:	480-271006	Instrument ID:	ICAP2
Client Matrix:	Solid	Prep Batch:	480-270374	Lab File ID:	I2102415A-2.asc
Dilution:	5.0	Leach Batch:	480-270052	Initial Weight/Volume:	50 mL
Analysis Date:	10/24/2015 1126			Final Weight/Volume:	50 mL
Prep Date:	10/22/2015 1130				
Leach Date:	10/21/2015 0941				

	% Rec.						
Analyte	MS	MSD	Limit	RPD	RPD Limit	MS Qual	MSD Qual
Selenium	97	107	75 - 125	10	20		

Client: U.S. Army Construction Engineering Resea

Job Number: 480-89453-1

Matrix Spike/
Matrix Spike Duplicate Recovery Report - Batch: 480-270374

Method: 6010C
Preparation: 3010A
TCLP

MS Lab Sample ID:	480-89453-4	Units: mg/L	MSD Lab Sample ID:	480-89453-4	
Client Matrix:	Solid		Client Matrix:	Solid	
Dilution:	1.0		Dilution:	1.0	
Analysis Date:	10/23/2015 2050		Analysis Date:	10/23/2015 2053	
Prep Date:	10/22/2015 1130		Prep Date:	10/22/2015 1130	
Leach Date:	10/21/2015 0941		Leach Date:	10/21/2015 0941	

Analyte	Sample Result/Qual		MS Spike Amount	MSD Spike Amount	MS Result/Qual	MSD Result/Qual	
Arsenic	ND		1.00	1.00	1.19	1.12	
Barium	3.8		1.00	1.00	4.78	4.48	F1
Cadmium	ND		1.00	1.00	1.13	1.07	
Chromium	ND		1.00	1.00	0.999	0.942	
Lead	0.0074	J	1.00	1.00	1.04	0.982	
Silver	ND		1.00	1.00	1.17	1.10	

Matrix Spike/
Matrix Spike Duplicate Recovery Report - Batch: 480-270374

Method: 6010C
Preparation: 3010A
TCLP

MS Lab Sample ID:	480-89453-4	Units: mg/L	MSD Lab Sample ID:	480-89453-4
Client Matrix:	Solid		Client Matrix:	Solid
Dilution:	5.0		Dilution:	5.0
Analysis Date:	10/24/2015 1123		Analysis Date:	10/24/2015 1126
Prep Date:	10/22/2015 1130		Prep Date:	10/22/2015 1130
Leach Date:	10/21/2015 0941		Leach Date:	10/21/2015 0941

Analyte	Sample Result/Qual	MS Spike Amount	MSD Spike Amount	MS Result/Qual	MSD Result/Qual
Selenium	ND	1.00	1.00	0.970	1.07

Client: U.S. Army Construction Engineering Resea

Job Number: 480-89453-1

Serial Dilution - Batch: 480-270374

Method: 6010C
Preparation: 3010A
TCLP

Lab Sample ID:	480-89453-4	Analysis Batch:	480-270880	Instrument ID:	ICAP2
Client Matrix:	Solid	Prep Batch:	480-270374	Lab File ID:	I2102315B-4.asc
Dilution:	5.0	Leach Batch:	480-270052	Initial Weight/Volume:	50 mL
Analysis Date:	10/23/2015 2043	Units:	mg/L	Final Weight/Volume:	50 mL
Prep Date:	10/22/2015 1130				
Leach Date:	10/21/2015 0941				

Analyte	Sample Result/Qual		Result	%Diff	Limit	Qual
Arsenic	ND		ND	NC	10	
Barium	3.8		3.74	1.0	10	J
Cadmium	ND		ND	NC	10	
Chromium	ND		ND	NC	10	
Lead	0.0074	J	ND	NC	10	
Silver	ND		ND	NC	10	

Serial Dilution - Batch: 480-270374

Method: 6010C
Preparation: 3010A
TCLP

Lab Sample ID:	480-89453-4	Analysis Batch:	480-271006	Instrument ID:	ICAP2
Client Matrix:	Solid	Prep Batch:	480-270374	Lab File ID:	I2102415A-2.asc
Dilution:	25	Leach Batch:	480-270052	Initial Weight/Volume:	50 mL
Analysis Date:	10/24/2015 1116	Units:	mg/L	Final Weight/Volume:	50 mL
Prep Date:	10/22/2015 1130				
Leach Date:	10/21/2015 0941				

Analyte	Sample Result/Qual	Result	%Diff	Limit	Qual
Selenium	ND	ND	NC	10	

Client: U.S. Army Construction Engineering Resea

Job Number: 480-89453-1

Method Blank - Batch: 180-159790

Method: 6020A
Preparation: 3050B

Lab Sample ID:	MB 180-159790/1-A	Analysis Batch:	180-159963	Instrument ID:	X
Client Matrix:	Solid	Prep Batch:	180-159790	Lab File ID:	X51109A.xml
Dilution:	1.0	Leach Batch:	N/A	Initial Weight/Volume:	00001.04 g
Analysis Date:	11/09/2015 1846	Units:	mg/Kg	Final Weight/Volume:	100 mL
Prep Date:	11/09/2015 1244				
Leach Date:	N/A				

Analyte	Result	Qual	MDL	RL
Arsenic	ND		0.017	0.096
Barium	ND		0.010	0.96
Cadmium	ND		0.0067	0.096
Chromium	0.00942	J	0.0059	0.19
Silver	ND		0.0038	0.096
Lead	ND		0.0037	0.096
Selenium	ND		0.048	0.48

Lab Control Sample/
Lab Control Sample Duplicate Recovery Report - Batch: 180-159790

Method: 6020A
Preparation: 3050B

LCS Lab Sample ID:	LCS 180-159790/2-A	Analysis Batch:	180-159963	Instrument ID:	X
Client Matrix:	Solid	Prep Batch:	180-159790	Lab File ID:	X51109A.xml
Dilution:	1.0	Leach Batch:	N/A	Initial Weight/Volume:	00001.02 g
Analysis Date:	11/09/2015 1851	Units:	mg/Kg	Final Weight/Volume:	100 mL
Prep Date:	11/09/2015 1244				
Leach Date:	N/A				

LCSD Lab Sample ID:	LCSD 180-159790/3-A	Analysis Batch:	180-159963	Instrument ID:	X
Client Matrix:	Solid	Prep Batch:	180-159790	Lab File ID:	X51109A.xml
Dilution:	1.0	Leach Batch:	N/A	Initial Weight/Volume:	00001.04 g
Analysis Date:	11/09/2015 1856	Units:	mg/Kg	Final Weight/Volume:	100 mL
Prep Date:	11/09/2015 1244				
Leach Date:	N/A				

	% Rec.						
Analyte	LCS	LCSD	Limit	RPD	RPD Limit	LCS Qual	LCSD Qual
Arsenic	93	93	80 - 120	2	20		
Barium	90	90	80 - 120	2	20		
Cadmium	95	94	80 - 120	3	20		
Chromium	105	104	80 - 120	3	20		
Silver	96	97	80 - 120	1	20		
Lead	100	101	80 - 120	1	20		
Selenium	93	91	80 - 120	4	20		

Client: U.S. Army Construction Engineering Resea

Job Number: 480-89453-1

Laboratory Control/
Laboratory Duplicate Data Report - Batch: 180-159790

Method: 6020A
Preparation: 3050B

LCS Lab Sample ID:	LCS 180-159790/2-A	Units: mg/Kg	LCSD Lab Sample ID:	LCSD 180-159790/3-A
Client Matrix:	Solid		Client Matrix:	Solid
Dilution:	1.0		Dilution:	1.0
Analysis Date:	11/09/2015 1851		Analysis Date:	11/09/2015 1856
Prep Date:	11/09/2015 1244		Prep Date:	11/09/2015 1244
Leach Date:	N/A		Leach Date:	N/A

Analyte	LCS Spike Amount	LCSD Spike Amount	LCS Result/Qual	LCSD Result/Qual
Arsenic	3.92	3.85	3.65	3.59
Barium	196	192	176.9	173.0
Cadmium	4.90	4.81	4.65	4.51
Chromium	19.6	19.2	20.66	20.06
Silver	4.90	4.81	4.72	4.67
Lead	1.96	1.92	1.97	1.94
Selenium	0.980	0.962	0.911	0.878

TCLP SPLPW Leachate Blank - Batch: 480-270385

Method: 7470A
Preparation: 7470A
TCLP

Lab Sample ID:	LB2 480-270052/1-E	Analysis Batch:	480-270525	Instrument ID:	LEEMAN2
Client Matrix:	Solid	Prep Batch:	480-270385	Lab File ID:	H10225TC.PRN
Dilution:	1.0	Leach Batch:	480-270052	Initial Weight/Volume:	30 mL
Analysis Date:	10/22/2015 1653	Units:	mg/L	Final Weight/Volume:	50 mL
Prep Date:	10/22/2015 1215				
Leach Date:	10/21/2015 0941				

Analyte	Result	Qual	MDL	RL
Mercury	ND		0.00012	0.00020

Method Blank - Batch: 480-270385

Method: 7470A
Preparation: 7470A

Lab Sample ID:	MB 480-270385/2-A	Analysis Batch:	480-270525	Instrument ID:	LEEMAN2
Client Matrix:	Water	Prep Batch:	480-270385	Lab File ID:	H10225TC.PRN
Dilution:	1.0	Leach Batch:	N/A	Initial Weight/Volume:	30 mL
Analysis Date:	10/22/2015 1656	Units:	mg/L	Final Weight/Volume:	50 mL
Prep Date:	10/22/2015 1215				
Leach Date:	N/A				

Analyte	Result	Qual	MDL	RL
Mercury	ND		0.00012	0.00020

Lab Control Sample - Batch: 480-270385

Method: 7470A
Preparation: 7470A

Lab Sample ID:	LCS 480-270385/3-A	Analysis Batch:	480-270525	Instrument ID:	LEEMAN2
Client Matrix:	Water	Prep Batch:	480-270385	Lab File ID:	H10225TC.PRN
Dilution:	1.0	Leach Batch:	N/A	Initial Weight/Volume:	30 mL
Analysis Date:	10/22/2015 1657	Units:	mg/L	Final Weight/Volume:	50 mL
Prep Date:	10/22/2015 1215				
Leach Date:	N/A				

Analyte	Spike Amount	Result	% Rec.	Limit	Qual
Mercury	0.00668	0.00645	97	80 - 120	

Client: U.S. Army Construction Engineering Resea

Job Number: 480-89453-1

Matrix Spike/
Matrix Spike Duplicate Recovery Report - Batch: 480-270385

Method: 7470A
Preparation: 7470A
TCLP

MS Lab Sample ID:	480-89453-4	Analysis Batch:	480-270525	Instrument ID:	LEEMAN2
Client Matrix:	Solid	Prep Batch:	480-270385	Lab File ID:	H10225TC.PRN
Dilution:	1.0	Leach Batch:	480-270052	Initial Weight/Volume:	30 mL
Analysis Date:	10/22/2015 1711			Final Weight/Volume:	50 mL
Prep Date:	10/22/2015 1215				
Leach Date:	10/21/2015 0941				

MSD Lab Sample ID:	480-89453-4	Analysis Batch:	480-270525	Instrument ID:	LEEMAN2
Client Matrix:	Solid	Prep Batch:	480-270385	Lab File ID:	H10225TC.PRN
Dilution:	1.0	Leach Batch:	480-270052	Initial Weight/Volume:	30 mL
Analysis Date:	10/22/2015 1714			Final Weight/Volume:	50 mL
Prep Date:	10/22/2015 1215				
Leach Date:	10/21/2015 0941				

	% Rec.						
Analyte	MS	MSD	Limit	RPD	RPD Limit	MS Qual	MSD Qual
Mercury	94	94	80 - 120	0	20		

Matrix Spike/
Matrix Spike Duplicate Recovery Report - Batch: 480-270385

Method: 7470A
Preparation: 7470A
TCLP

MS Lab Sample ID:	480-89453-4	Units: mg/L	MSD Lab Sample ID: 480-89453-4
Client Matrix:	Solid		Client Matrix: Solid
Dilution:	1.0		Dilution: 1.0
Analysis Date:	10/22/2015 1711		Analysis Date: 10/22/2015 1714
Prep Date:	10/22/2015 1215		Prep Date: 10/22/2015 1215
Leach Date:	10/21/2015 0941		Leach Date: 10/21/2015 0941

Analyte	Sample Result/Qual	MS Spike Amount	MSD Spike Amount	MS Result/Qual	MSD Result/Qual
Mercury	ND	0.00668	0.00668	0.00627	0.00627

Serial Dilution - Batch: 480-270385

Method: 7470A
Preparation: 7470A
TCLP

Lab Sample ID:	480-89453-4	Analysis Batch:	480-270525	Instrument ID:	LEEMAN2
Client Matrix:	Solid	Prep Batch:	480-270385	Lab File ID:	H10225TC.PRN
Dilution:	5.0	Leach Batch:	480-270052	Initial Weight/Volume:	30 mL
Analysis Date:	10/22/2015 1710	Units:	mg/L	Final Weight/Volume:	50 mL
Prep Date:	10/22/2015 1215				
Leach Date:	10/21/2015 0941				

Analyte	Sample Result/Qual	Result	%Diff	Limit	Qual
Mercury	ND	ND	NC	10	

Client: U.S. Army Construction Engineering Resea

Job Number: 480-89453-1

Method Blank - Batch: 480-270135

Method: 7471B
Preparation: 7471B

Lab Sample ID:	MB 480-270135/1-A	Analysis Batch:	480-270289	Instrument ID:	LEEMAN2
Client Matrix:	Solid	Prep Batch:	480-270135	Lab File ID:	H10215S1.PRN
Dilution:	1.0	Leach Batch:	N/A	Initial Weight/Volume:	+0.5937 g
Analysis Date:	10/21/2015 1714	Units:	mg/Kg	Final Weight/Volume:	50 mL
Prep Date:	10/21/2015 1500				
Leach Date:	N/A				

Analyte	Result	Qual	MDL	RL
Mercury	ND		0.0082	0.020

LCS-Certified Reference Material - Batch: 480-270135

Method: 7471B
Preparation: 7471B

Lab Sample ID:	LCSSRM 480-270135/2-A	Analysis Batch:	480-270289	Instrument ID:	LEEMAN2
Client Matrix:	Solid	Prep Batch:	480-270135	Lab File ID:	H10215S1.PRN
Dilution:	1.0	Leach Batch:	N/A	Initial Weight/Volume:	+0.0239 g
Analysis Date:	10/21/2015 1718	Units:	mg/Kg	Final Weight/Volume:	50 mL
Prep Date:	10/21/2015 1500				
Leach Date:	N/A				

Analyte	Spike Amount	Result	% Rec.	Limit	Qual
Mercury	8.37	9.27	110.7	51.3 - 148.1	

Matrix Spike/
Matrix Spike Duplicate Recovery Report - Batch: 480-270135

Method: 7471B
Preparation: 7471B

MS Lab Sample ID:	480-89453-1	Analysis Batch:	480-270289	Instrument ID:	LEEMAN2
Client Matrix:	Solid	Prep Batch:	480-270135	Lab File ID:	H10215S1.PRN
Dilution:	1.0	Leach Batch:	N/A	Initial Weight/Volume:	+0.5942 g
Analysis Date:	10/21/2015 1723			Final Weight/Volume:	50 mL
Prep Date:	10/21/2015 1500				
Leach Date:	N/A				

MSD Lab Sample ID:	480-89453-1	Analysis Batch:	480-270289	Instrument ID:	LEEMAN2
Client Matrix:	Solid	Prep Batch:	480-270135	Lab File ID:	H10215S1.PRN
Dilution:	1.0	Leach Batch:	N/A	Initial Weight/Volume:	+0.5954 g
Analysis Date:	10/21/2015 1725			Final Weight/Volume:	50 mL
Prep Date:	10/21/2015 1500				
Leach Date:	N/A				

	% Rec.						
Analyte	MS	MSD	Limit	RPD	RPD Limit	MS Qual	MSD Qual
Mercury	100	101	80 - 120	0	20		

Client: U.S. Army Construction Engineering Resea

Job Number: 480-89453-1

Matrix Spike/
Matrix Spike Duplicate Recovery Report - Batch: 480-270135

Method: 7471B
Preparation: 7471B

MS Lab Sample ID:	480-89453-1	Units: mg/Kg	MSD Lab Sample ID:	480-89453-1
Client Matrix:	Solid		Client Matrix:	Solid
Dilution:	1.0		Dilution:	1.0
Analysis Date:	10/21/2015 1723		Analysis Date:	10/21/2015 1725
Prep Date:	10/21/2015 1500		Prep Date:	10/21/2015 1500
Leach Date:	N/A		Leach Date:	N/A

Analyte	Sample Result/Qual	MS Spike Amount	MSD Spike Amount	MS Result/Qual	MSD Result/Qual
Mercury	ND	0.376	0.376	0.378	0.378

Serial Dilution - Batch: 480-270135

Method: 7471B
Preparation: 7471B

Lab Sample ID:	480-89453-1	Analysis Batch:	480-270289	Instrument ID:	LEEMAN2
Client Matrix:	Solid	Prep Batch:	480-270135	Lab File ID:	H10215S1.PRN
Dilution:	5.0	Leach Batch:	N/A	Initial Weight/Volume:	+0.5970 g
Analysis Date:	10/21/2015 1721	Units:	mg/Kg	Final Weight/Volume:	50 mL
Prep Date:	10/21/2015 1500				
Leach Date:	N/A				

Analyte	Sample Result/Qual	Result	%Diff	Limit	Qual
Mercury	ND	ND	NC	10	

DATA REPORTING QUALIFIERS

Client: U.S. Army Construction Engineering Resea

Job Number: 480-89453-1

Lab Section	Qualifier	Description
Metals		
	B	Compound was found in the blank and sample.
	F1	MS and/or MSD Recovery is outside acceptance limits.
	J	Result is less than the RL but greater than or equal to the MDL and the concentration is an approximate value.
	H	Sample was prepped or analyzed beyond the specified holding time

Client: U.S. Army Construction Engineering Resea

Job Number: 480-89453-1

QC Association Summary

Lab Sample ID	Client Sample ID	Report Basis	Client Matrix	Method	Prep Batch
Metals					
Prep Batch: 180-159790					
LCS 180-159790/2-A	Lab Control Sample	T	Solid	3050B	
LCSD 180-159790/3-A	Lab Control Sample Duplicate	T	Solid	3050B	
MB 180-159790/1-A	Method Blank	T	Solid	3050B	
480-89453-1	A-01-020415-1600	T	Solid	3050B	
480-89453-2	A-01-031915-1600	T	Solid	3050B	
480-89453-3	A-01-040215-1505	T	Solid	3050B	
480-89453-4	A-01-050815-1600	T	Solid	3050B	
Analysis Batch:180-159963					
LCS 180-159790/2-A	Lab Control Sample	T	Solid	6020A	180-159790
LCSD 180-159790/3-A	Lab Control Sample Duplicate	T	Solid	6020A	180-159790
MB 180-159790/1-A	Method Blank	T	Solid	6020A	180-159790
480-89453-1	A-01-020415-1600	T	Solid	6020A	180-159790
480-89453-2	A-01-031915-1600	T	Solid	6020A	180-159790
480-89453-3	A-01-040215-1505	T	Solid	6020A	180-159790
480-89453-4	A-01-050815-1600	T	Solid	6020A	180-159790
Prep Batch: 480-270052					
LB2 480-270052/1-C	TCLP SPLPW Leachate Blank	P	Solid	1311	
LB2 480-270052/1-E	TCLP SPLPW Leachate Blank	P	Solid	1311	
480-89453-1	A-01-020415-1600	P	Solid	1311	
480-89453-2	A-01-031915-1600	P	Solid	1311	
480-89453-3	A-01-040215-1505	P	Solid	1311	
480-89453-4	A-01-050815-1600	P	Solid	1311	
480-89453-4MS	Matrix Spike	P	Solid	1311	
480-89453-4MSD	Matrix Spike Duplicate	P	Solid	1311	
Prep Batch: 480-270135					
LCSSRM 480-270135/2-A	LCS-Certified Reference Material	T	Solid	7471B	
MB 480-270135/1-A	Method Blank	T	Solid	7471B	
480-89453-1	A-01-020415-1600	T	Solid	7471B	
480-89453-1MS	Matrix Spike	T	Solid	7471B	
480-89453-1MSD	Matrix Spike Duplicate	T	Solid	7471B	
480-89453-2	A-01-031915-1600	T	Solid	7471B	
480-89453-3	A-01-040215-1505	T	Solid	7471B	
480-89453-4	A-01-050815-1600	T	Solid	7471B	

Client: U.S. Army Construction Engineering Resea

Job Number: 480-89453-1

QC Association Summary

Lab Sample ID	Client Sample ID	Report Basis	Client Matrix	Method	Prep Batch
Metals					
Analysis Batch:480-270289					
LCSSRM 480-270135/2-A	LCS-Certified Reference Material	T	Solid	7471B	480-270135
MB 480-270135/1-A	Method Blank	T	Solid	7471B	480-270135
480-89453-1	A-01-020415-1600	T	Solid	7471B	480-270135
480-89453-1MS	Matrix Spike	T	Solid	7471B	480-270135
480-89453-1MSD	Matrix Spike Duplicate	T	Solid	7471B	480-270135
480-89453-2	A-01-031915-1600	T	Solid	7471B	480-270135
480-89453-3	A-01-040215-1505	T	Solid	7471B	480-270135
480-89453-4	A-01-050815-1600	T	Solid	7471B	480-270135
Prep Batch: 480-270374					
LCS 480-270374/3-A	Lab Control Sample	T	Water	3010A	
MB 480-270374/2-A	Method Blank	T	Water	3010A	
LB2 480-270052/1-C	TCLP SPLPW Leachate Blank	P	Solid	3010A	480-270052
480-89453-1	A-01-020415-1600	P	Solid	3010A	480-270052
480-89453-2	A-01-031915-1600	P	Solid	3010A	480-270052
480-89453-3	A-01-040215-1505	P	Solid	3010A	480-270052
480-89453-4	A-01-050815-1600	P	Solid	3010A	480-270052
480-89453-4MS	Matrix Spike	P	Solid	3010A	480-270052
480-89453-4MSD	Matrix Spike Duplicate	P	Solid	3010A	480-270052
Prep Batch: 480-270385					
LCS 480-270385/3-A	Lab Control Sample	T	Water	7470A	
MB 480-270385/2-A	Method Blank	T	Water	7470A	
LB2 480-270052/1-E	TCLP SPLPW Leachate Blank	P	Solid	7470A	480-270052
480-89453-1	A-01-020415-1600	P	Solid	7470A	480-270052
480-89453-2	A-01-031915-1600	P	Solid	7470A	480-270052
480-89453-3	A-01-040215-1505	P	Solid	7470A	480-270052
480-89453-4	A-01-050815-1600	P	Solid	7470A	480-270052
480-89453-4MS	Matrix Spike	P	Solid	7470A	480-270052
480-89453-4MSD	Matrix Spike Duplicate	P	Solid	7470A	480-270052
Analysis Batch:480-270525					
LB2 480-270052/1-E	TCLP SPLPW Leachate Blank	P	Solid	7470A	480-270385
LCS 480-270385/3-A	Lab Control Sample	T	Water	7470A	480-270385
MB 480-270385/2-A	Method Blank	T	Water	7470A	480-270385
480-89453-1	A-01-020415-1600	P	Solid	7470A	480-270385
480-89453-2	A-01-031915-1600	P	Solid	7470A	480-270385
480-89453-3	A-01-040215-1505	P	Solid	7470A	480-270385
480-89453-4	A-01-050815-1600	P	Solid	7470A	480-270385
480-89453-4MS	Matrix Spike	P	Solid	7470A	480-270385
480-89453-4MSD	Matrix Spike Duplicate	P	Solid	7470A	480-270385

Client: U.S. Army Construction Engineering Resea

Job Number: 480-89453-1

QC Association Summary

Lab Sample ID	Client Sample ID	Report Basis	Client Matrix	Method	Prep Batch
Metals					
Analysis Batch:480-270880					
LB2 480-270052/1-C	TCLP SPLPW Leachate Blank	P	Solid	6010C	480-270374
LCS 480-270374/3-A	Lab Control Sample	T	Water	6010C	480-270374
MB 480-270374/2-A	Method Blank	T	Water	6010C	480-270374
480-89453-1	A-01-020415-1600	P	Solid	6010C	480-270374
480-89453-2	A-01-031915-1600	P	Solid	6010C	480-270374
480-89453-3	A-01-040215-1505	P	Solid	6010C	480-270374
480-89453-4	A-01-050815-1600	P	Solid	6010C	480-270374
480-89453-4MS	Matrix Spike	P	Solid	6010C	480-270374
480-89453-4MSD	Matrix Spike Duplicate	P	Solid	6010C	480-270374
Analysis Batch:480-271006					
480-89453-1	A-01-020415-1600	P	Solid	6010C	480-270374
480-89453-2	A-01-031915-1600	P	Solid	6010C	480-270374
480-89453-3	A-01-040215-1505	P	Solid	6010C	480-270374
480-89453-4	A-01-050815-1600	P	Solid	6010C	480-270374
480-89453-4MS	Matrix Spike	P	Solid	6010C	480-270374
480-89453-4MSD	Matrix Spike Duplicate	P	Solid	6010C	480-270374

Report Basis
P = TCLP
T = Total

General Chemistry

Analysis Batch:180-158347				
480-89453-1	A-01-020415-1600	T	Solid	2540G
480-89453-2	A-01-031915-1600	T	Solid	2540G
480-89453-3	A-01-040215-1505	T	Solid	2540G
480-89453-4	A-01-050815-1600	T	Solid	2540G

Report Basis
T = Total

Laboratory Chronicle

Lab ID: 480-89453-1 **Client ID: A-01-020415-1600**

Sample Date/Time: 02/04/2015 16:00 Received Date/Time: 10/20/2015 09:20

Method	Bottle ID	Run	Analysis Batch	Prep Batch	Date Prepared / Analyzed	Dil	Lab	Analyst
P:3010A	480-89453-A-1-E		480-270880	480-270374	10/22/2015 11:30	1	TAL BUF	KJ1
A:6010C	480-89453-A-1-E		480-270880	480-270374	10/23/2015 20:20	1	TAL BUF	AMH
P:3010A	480-89453-A-1-E ^5		480-271006	480-270374	10/22/2015 11:30	5	TAL BUF	KJ1
A:6010C	480-89453-A-1-E ^5		480-271006	480-270374	10/24/2015 10:53	5	TAL BUF	AMH
P:3050B	480-89453-A-1-H ^5		180-159963	180-159790	11/09/2015 12:44	5	TAL PIT	BMH
A:6020A	480-89453-A-1-H ^5		180-159963	180-159790	11/09/2015 20:01	5	TAL PIT	WTR
P:7470A	480-89453-A-1-F		480-270525	480-270385	10/22/2015 12:15	1	TAL BUF	TAS
A:7470A	480-89453-A-1-F		480-270525	480-270385	10/22/2015 17:02	1	TAL BUF	TAS
P:7471B	480-89453-A-1-B		480-270289	480-270135	10/21/2015 15:00	1	TAL BUF	TAS
A:7471B	480-89453-A-1-B		480-270289	480-270135	10/21/2015 17:20	1	TAL BUF	TAS
A:2540G	480-89453-A-1		180-158347		10/27/2015 08:35	1	TAL PIT	CLL

Lab ID: 480-89453-1 MS **Client ID: A-01-020415-1600**

Sample Date/Time: 02/04/2015 16:00 Received Date/Time: 10/20/2015 09:20

Method	Bottle ID	Run	Analysis Batch	Prep Batch	Date Prepared / Analyzed	Dil	Lab	Analyst
P:7471B	480-89453-A-1-C MS		480-270289	480-270135	10/21/2015 15:00	1	TAL BUF	TAS
A:7471B	480-89453-A-1-C MS		480-270289	480-270135	10/21/2015 17:23	1	TAL BUF	TAS

Lab ID: 480-89453-1 MSD **Client ID: A-01-020415-1600**

Sample Date/Time: 02/04/2015 16:00 Received Date/Time: 10/20/2015 09:20

Method	Bottle ID	Run	Analysis Batch	Prep Batch	Date Prepared / Analyzed	Dil	Lab	Analyst
P:7471B	480-89453-A-1-D MSD		480-270289	480-270135	10/21/2015 15:00	1	TAL BUF	TAS
A:7471B	480-89453-A-1-D MSD		480-270289	480-270135	10/21/2015 17:25	1	TAL BUF	TAS

Lab ID: 480-89453-1 SD **Client ID: A-01-020415-1600**

Sample Date/Time: 02/04/2015 16:00 Received Date/Time: 10/20/2015 09:20

Method	Bottle ID	Run	Analysis Batch	Prep Batch	Date Prepared / Analyzed	Dil	Lab	Analyst
P:7471B	480-89453-A-1-B SD ^5		480-270289	480-270135	10/21/2015 15:00	5	TAL BUF	TAS
A:7471B	480-89453-A-1-B SD ^5		480-270289	480-270135	10/21/2015 17:21	5	TAL BUF	TAS

Laboratory Chronicle

Lab ID: 480-89453-2 **Client ID: A-01-031915-1600**

Sample Date/Time: 03/19/2015 16:00 Received Date/Time: 10/20/2015 09:20

Method	Bottle ID	Run	Analysis Batch	Prep Batch	Date Prepared / Analyzed	Dil	Lab	Analyst
P:3010A	480-89453-A-2-C		480-270880	480-270374	10/22/2015 11:30	1	TAL BUF	KJ1
A:6010C	480-89453-A-2-C		480-270880	480-270374	10/23/2015 20:23	1	TAL BUF	AMH
P:3010A	480-89453-A-2-C ^5		480-271006	480-270374	10/22/2015 11:30	5	TAL BUF	KJ1
A:6010C	480-89453-A-2-C ^5		480-271006	480-270374	10/24/2015 11:06	5	TAL BUF	AMH
P:3050B	480-89453-A-2-F ^5		180-159963	180-159790	11/09/2015 12:44	5	TAL PIT	BMH
A:6020A	480-89453-A-2-F ^5		180-159963	180-159790	11/09/2015 20:06	5	TAL PIT	WTR
P:7470A	480-89453-A-2-D		480-270525	480-270385	10/22/2015 12:15	1	TAL BUF	TAS
A:7470A	480-89453-A-2-D		480-270525	480-270385	10/22/2015 17:04	1	TAL BUF	TAS
P:7471B	480-89453-A-2-B		480-270289	480-270135	10/21/2015 15:00	1	TAL BUF	TAS
A:7471B	480-89453-A-2-B		480-270289	480-270135	10/21/2015 17:26	1	TAL BUF	TAS
A:2540G	480-89453-A-2		180-158347		10/27/2015 08:35	1	TAL PIT	CLL

Lab ID: 480-89453-3 **Client ID: A-01-040215-1505**

Sample Date/Time: 04/02/2015 15:05 Received Date/Time: 10/20/2015 09:20

Method	Bottle ID	Run	Analysis Batch	Prep Batch	Date Prepared / Analyzed	Dil	Lab	Analyst
P:3010A	480-89453-A-3-C		480-270880	480-270374	10/22/2015 11:30	1	TAL BUF	KJ1
A:6010C	480-89453-A-3-C		480-270880	480-270374	10/23/2015 20:27	1	TAL BUF	AMH
P:3010A	480-89453-A-3-C ^5		480-271006	480-270374	10/22/2015 11:30	5	TAL BUF	KJ1
A:6010C	480-89453-A-3-C ^5		480-271006	480-270374	10/24/2015 11:09	5	TAL BUF	AMH
P:3050B	480-89453-A-3-F ^5		180-159963	180-159790	11/09/2015 12:44	5	TAL PIT	BMH
A:6020A	480-89453-A-3-F ^5		180-159963	180-159790	11/09/2015 20:11	5	TAL PIT	WTR
P:7470A	480-89453-A-3-D		480-270525	480-270385	10/22/2015 12:15	1	TAL BUF	TAS
A:7470A	480-89453-A-3-D		480-270525	480-270385	10/22/2015 17:05	1	TAL BUF	TAS
P:7471B	480-89453-A-3-B		480-270289	480-270135	10/21/2015 15:00	1	TAL BUF	TAS
A:7471B	480-89453-A-3-B		480-270289	480-270135	10/21/2015 17:29	1	TAL BUF	TAS
A:2540G	480-89453-A-3		180-158347		10/27/2015 08:35	1	TAL PIT	CLL

Laboratory Chronicle

Lab ID: 480-89453-4 **Client ID: A-01-050815-1600**

Sample Date/Time: 05/08/2015 16:00 Received Date/Time: 10/20/2015 09:20

Method	Bottle ID	Run	Analysis Batch	Prep Batch	Date Prepared / Analyzed	Dil	Lab	Analyst
P:3010A	480-89453-A-4-C		480-270880	480-270374	10/22/2015 11:30	1	TAL BUF	KJ1
A:6010C	480-89453-A-4-C		480-270880	480-270374	10/23/2015 20:40	1	TAL BUF	AMH
P:3010A	480-89453-A-4-C ^5		480-271006	480-270374	10/22/2015 11:30	5	TAL BUF	KJ1
A:6010C	480-89453-A-4-C ^5		480-271006	480-270374	10/24/2015 11:13	5	TAL BUF	AMH
P:3050B	480-89453-A-4-J ^5		180-159963	180-159790	11/09/2015 12:44	5	TAL PIT	BMH
A:6020A	480-89453-A-4-J ^5		180-159963	180-159790	11/09/2015 20:16	5	TAL PIT	WTR
P:7470A	480-89453-A-4-F		480-270525	480-270385	10/22/2015 12:15	1	TAL BUF	TAS
A:7470A	480-89453-A-4-F		480-270525	480-270385	10/22/2015 17:08	1	TAL BUF	TAS
P:7471B	480-89453-A-4-B		480-270289	480-270135	10/21/2015 15:00	1	TAL BUF	TAS
A:7471B	480-89453-A-4-B		480-270289	480-270135	10/21/2015 17:30	1	TAL BUF	TAS
A:2540G	480-89453-A-4		180-158347		10/27/2015 08:35	1	TAL PIT	CLL

Lab ID: 480-89453-4 MS **Client ID: A-01-050815-1600**

Sample Date/Time: 05/08/2015 16:00 Received Date/Time: 10/20/2015 09:20

Method	Bottle ID	Run	Analysis Batch	Prep Batch	Date Prepared / Analyzed	Dil	Lab	Analyst
P:3010A	480-89453-A-4-D MS		480-270880	480-270374	10/22/2015 11:30	1	TAL BUF	KJ1
A:6010C	480-89453-A-4-D MS		480-270880	480-270374	10/23/2015 20:50	1	TAL BUF	AMH
P:3010A	480-89453-A-4-D MS ^5		480-271006	480-270374	10/22/2015 11:30	5	TAL BUF	KJ1
A:6010C	480-89453-A-4-D MS ^5		480-271006	480-270374	10/24/2015 11:23	5	TAL BUF	AMH
P:7470A	480-89453-A-4-G MS		480-270525	480-270385	10/22/2015 12:15	1	TAL BUF	TAS
A:7470A	480-89453-A-4-G MS		480-270525	480-270385	10/22/2015 17:11	1	TAL BUF	TAS

Lab ID: 480-89453-4 MSD **Client ID: A-01-050815-1600**

Sample Date/Time: 05/08/2015 16:00 Received Date/Time: 10/20/2015 09:20

Method	Bottle ID	Run	Analysis Batch	Prep Batch	Date Prepared / Analyzed	Dil	Lab	Analyst
P:3010A	480-89453-A-4-E MSD		480-270880	480-270374	10/22/2015 11:30	1	TAL BUF	KJ1
A:6010C	480-89453-A-4-E MSD		480-270880	480-270374	10/23/2015 20:53	1	TAL BUF	AMH
P:3010A	480-89453-A-4-E MSD ^5		480-271006	480-270374	10/22/2015 11:30	5	TAL BUF	KJ1
A:6010C	480-89453-A-4-E MSD ^5		480-271006	480-270374	10/24/2015 11:26	5	TAL BUF	AMH
P:7470A	480-89453-A-4-H MSD		480-270525	480-270385	10/22/2015 12:15	1	TAL BUF	TAS
A:7470A	480-89453-A-4-H MSD		480-270525	480-270385	10/22/2015 17:14	1	TAL BUF	TAS

Laboratory Chronicle

Lab ID: 480-89453-4 SD **Client ID: A-01-050815-1600**

Sample Date/Time: 05/08/2015 16:00 Received Date/Time: 10/20/2015 09:20

Method	Bottle ID	Run	Analysis Batch	Prep Batch	Date Prepared / Analyzed	Dil	Lab	Analyst
P:3010A	480-89453-A-4-C SD ^5		480-270880	480-270374	10/22/2015 11:30	5	TAL BUF	KJ1
A:6010C	480-89453-A-4-C SD ^5		480-270880	480-270374	10/23/2015 20:43	5	TAL BUF	AMH
P:3010A	480-89453-A-4-C PDS		480-270880	480-270374	10/22/2015 11:30	1	TAL BUF	KJ1
A:6010C	480-89453-A-4-C PDS		480-270880	480-270374	10/23/2015 20:47	1	TAL BUF	AMH
P:3010A	480-89453-A-4-C SD ^25		480-271006	480-270374	10/22/2015 11:30	25	TAL BUF	KJ1
A:6010C	480-89453-A-4-C SD ^25		480-271006	480-270374	10/24/2015 11:16	25	TAL BUF	AMH
P:3010A	480-89453-A-4-C PDS ^5		480-271006	480-270374	10/22/2015 11:30	5	TAL BUF	KJ1
A:6010C	480-89453-A-4-C PDS ^5		480-271006	480-270374	10/24/2015 11:19	5	TAL BUF	AMH
P:7470A	480-89453-A-4-F SD ^5		480-270525	480-270385	10/22/2015 12:15	5	TAL BUF	TAS
A:7470A	480-89453-A-4-F SD ^5		480-270525	480-270385	10/22/2015 17:10	5	TAL BUF	TAS

Lab ID: MB **Client ID: N/A**

Sample Date/Time: N/A Received Date/Time: N/A

Method	Bottle ID	Run	Analysis Batch	Prep Batch	Date Prepared / Analyzed	Dil	Lab	Analyst
P:3010A	MB 480-270374/2-A		480-270880	480-270374	10/22/2015 11:30	1	TAL BUF	KJ1
A:6010C	MB 480-270374/2-A		480-270880	480-270374	10/23/2015 20:14	1	TAL BUF	AMH
P:3050B	MB 180-159790/1-A		180-159963	180-159790	11/09/2015 12:44	1	TAL PIT	BMH
A:6020A	MB 180-159790/1-A		180-159963	180-159790	11/09/2015 18:46	1	TAL PIT	WTR
P:7470A	MB 480-270385/2-A		480-270525	480-270385	10/22/2015 12:15	1	TAL BUF	TAS
A:7470A	MB 480-270385/2-A		480-270525	480-270385	10/22/2015 16:56	1	TAL BUF	TAS
P:7471B	MB 480-270135/1-A		480-270289	480-270135	10/21/2015 15:00	1	TAL BUF	TAS
A:7471B	MB 480-270135/1-A		480-270289	480-270135	10/21/2015 17:14	1	TAL BUF	TAS

Lab ID: LB2 **Client ID: N/A**

Sample Date/Time: N/A Received Date/Time: N/A

Method	Bottle ID	Run	Analysis Batch	Prep Batch	Date Prepared / Analyzed	Dil	Lab	Analyst
P:3010A	LB2 480-270052/1-C		480-270880	480-270374	10/22/2015 11:30	1	TAL BUF	KJ1
A:6010C	LB2 480-270052/1-C		480-270880	480-270374	10/23/2015 20:10	1	TAL BUF	AMH
P:7470A	LB2 480-270052/1-E		480-270525	480-270385	10/22/2015 12:15	1	TAL BUF	TAS
A:7470A	LB2 480-270052/1-E		480-270525	480-270385	10/22/2015 16:53	1	TAL BUF	TAS

Client: U.S. Army Construction Engineering Resea

Job Number: 480-89453-1

Laboratory Chronicle

Lab ID: LCS **Client ID: N/A**

Sample Date/Time: N/A Received Date/Time: N/A

Method	Bottle ID	Run	Analysis Batch	Prep Batch	Date Prepared / Analyzed	Dil	Lab	Analyst
P:3010A	LCS 480-270374/3-A		480-270880	480-270374	10/22/2015 11:30	1	TAL BUF	KJ1
A:6010C	LCS 480-270374/3-A		480-270880	480-270374	10/23/2015 20:17	1	TAL BUF	AMH
P:3050B	LCS 180-159790/2-A		180-159963	180-159790	11/09/2015 12:44	1	TAL PIT	BMH
A:6020A	LCS 180-159790/2-A		180-159963	180-159790	11/09/2015 18:51	1	TAL PIT	WTR
P:7470A	LCS 480-270385/3-A		480-270525	480-270385	10/22/2015 12:15	1	TAL BUF	TAS
A:7470A	LCS 480-270385/3-A		480-270525	480-270385	10/22/2015 16:57	1	TAL BUF	TAS

Lab ID: LCSD **Client ID: N/A**

Sample Date/Time: N/A Received Date/Time: N/A

Method	Bottle ID	Run	Analysis Batch	Prep Batch	Date Prepared / Analyzed	Dil	Lab	Analyst
P:3050B	LCSD 180-159790/3-A		180-159963	180-159790	11/09/2015 12:44	1	TAL PIT	BMH
A:6020A	LCSD 180-159790/3-A		180-159963	180-159790	11/09/2015 18:56	1	TAL PIT	WTR

Lab ID: LCSSRM **Client ID: N/A**

Sample Date/Time: N/A Received Date/Time: N/A

Method	Bottle ID	Run	Analysis Batch	Prep Batch	Date Prepared / Analyzed	Dil	Lab	Analyst
P:7471B	LCSSRM 480-270135/2-A		480-270289	480-270135	10/21/2015 15:00	1	TAL BUF	TAS
A:7471B	LCSSRM 480-270135/2-A		480-270289	480-270135	10/21/2015 17:18	1	TAL BUF	TAS

Lab References:

TAL BUF = TestAmerica Buffalo

TAL PIT = TestAmerica Pittsburgh

REAGENT TRACEABILITY SUMMARY

Lab Name: TestAmerica Buffalo Job No.: 480-89453-1

SDG No.:

Reagent ID	Exp Date	Prep Date	Dilutant Used	Reagent Final Volume	Parent Reagent		Analyte	Concentration
					Reagent ID	Volume Added		
MED_SRM_D085_00002	10/31/17		ERA, Lot D085-540		(Purchased Reagent)		Al	8060 mg/Kg
							Arsenic	113 mg/Kg
							B	99.1 mg/Kg
							Barium	155 mg/Kg
							Be	109 mg/Kg
							Ca	5850 mg/Kg
							Cadmium	67.5 mg/Kg
							Chromium	164 mg/Kg
							Co	100 mg/Kg
							Cu	100 mg/Kg
							Fe	15200 mg/Kg
							K	2770 mg/Kg
							Lead	90.1 mg/Kg
							Mercury	8.37 mg/Kg
							Mg	2790 mg/Kg
							Mn	363 mg/Kg
							Mo	73.8 mg/Kg
							Na	686 mg/Kg
							Ni	89.3 mg/Kg
							Sb	94 mg/Kg
							Selenium	156 mg/Kg
							Silver	52.6 mg/Kg
							Sn	100 mg/Kg
							Sr	86.3 mg/Kg
							Ti	304 mg/Kg
							Tl	116 mg/Kg
							V	73 mg/Kg
							Zn	168 mg/Kg
MED_TCLP_00013	07/31/16		Ultra Scientific, Lot CM-3291		(Purchased Reagent)		Arsenic	200 ug/mL
							Barium	200 ug/mL
							Be	200 ug/mL
							Cadmium	200 ug/mL
							Chromium	200 ug/mL
							Co	200 ug/mL
							Cu	200 ug/mL
							Lead	200 ug/mL
							Mn	200 ug/mL
							Mo	200 ug/mL
							Ni	200 ug/mL
							Sb	200 ug/mL
							Selenium	200 ug/mL
							Silver	200 ug/mL
							Tl	200 ug/mL
							V	200 ug/mL
							Zn	200 ug/mL
MEH_HG_TCLP_W_00073	04/07/16	10/07/15	Di Water, Lot Di H2O	100 mL	MEA_Sr_STK_00003	2 mL	Sr	200000 ng/mL
					MEH_HG3_STK_00006	1.335 mL	Mercury	1335 ng/mL

REAGENT TRACEABILITY SUMMARY

Lab Name: TestAmerica Buffalo Job No.: 480-89453-1

SDG No.:

Reagent ID	Exp Date	Prep Date	Dilutant Used	Reagent Final Volume	Parent Reagent		Analyte	Concentration
					Reagent ID	Volume Added		
.MEA_Sr_STK_00003	05/17/16		Ultra Scientific, Lot L00106		(Purchased Reagent)		Sr	10000 ug/mL
.MEH_HG3_STK_00006	08/30/16		Aqua Solutions, Lot 5073168		(Purchased Reagent)		Mercury	100 mg/L
MEH_HG2_WKG_01023	10/22/15	10/21/15	1% HNO3, Lot 3021848	50 mL	MEH_HG2_INT_00029	0.5 mL	Mercury	100 ng/mL
.MEH_HG2_INT_00029	04/05/16	10/05/15	1% HNO3, Lot 2930814	50 mL	MEH_HG3_STK_00006	5 mL	Mercury	10000 ng/mL
..MEH_HG3_STK_00006	08/30/16		Aqua Solutions, Lot 5073168		(Purchased Reagent)		Mercury	100 mg/L
MEH_HG2_WKG_01024	10/23/15	10/22/15	1% HNO3, Lot 3021848	50 mL	MEH_HG2_INT_00029	0.5 mL	Mercury	100 ng/mL
.MEH_HG2_INT_00029	04/05/16	10/05/15	1% HNO3, Lot 2930814	50 mL	MEH_HG3_STK_00006	5 mL	Mercury	10000 ng/mL
..MEH_HG3_STK_00006	08/30/16		Aqua Solutions, Lot 5073168		(Purchased Reagent)		Mercury	100 mg/L
MEI_04_ICV_00286	01/08/16	10/12/15	1% HNO3, Lot 2993303	100 mL	MEI_09_CCV_00200	75 mL	Arsenic	0.375 mg/L
							Barium	0.375 mg/L
							Cadmium	0.375 mg/L
							Chromium	0.375 mg/L
							Lead	0.375 mg/L
							Selenium	0.375 mg/L
							Silver	0.375 mg/L
.MEI_09_CCV_00200	01/08/16	10/05/15	1% HNO3, Lot 2993303	2000 mL	MEI_CCV_A_STK_00009	10 mL	Arsenic	0.5 ug/mL
							Barium	0.5 ug/mL
							Cadmium	0.5 ug/mL
							Chromium	0.5 ug/mL
							Lead	0.5 ug/mL
							Selenium	0.5 ug/mL
					MEI_CCV_Ag_00008	1 mL	Silver	0.5 ug/mL
..MEI_CCV_A_STK_00009	01/08/16		High-Purity, Lot 1500517		(Purchased Reagent)		Arsenic	100 ug/mL
							Barium	100 ug/mL
							Cadmium	100 ug/mL
							Chromium	100 ug/mL
							Lead	100 ug/mL
							Selenium	100 ug/mL
..MEI_CCV_Ag_00008	09/17/17		High-Purity, Lot 1420628		(Purchased Reagent)		Silver	1000 ug/mL
MEI_07_ICSA_00080	07/08/17	10/02/15	1% HNO3, Lot 2993303	500 mL	MEA_Al_STK_00006	25 mL	Al	500 ug/mL
					MEA_Ca_STK_00009	25 mL	Ca	500 ug/mL
					MEA_Fe_STK_00008	10 mL	Fe	200 ug/mL
					MEA_MG_STK_00007	25 mL	Mg	500 ug/mL
.MEA_Al_STK_00006	07/08/17		Ultra Scientific, Lot M00266B		(Purchased Reagent)		Al	10000 ug/mL
.MEA_Ca_STK_00009	08/17/18		Ultra Scientific, Lot T00315		(Purchased Reagent)		Ca	10000 ug/mL
.MEA_Fe_STK_00008	08/17/18		Ultra Scientific, Lot CM-3098		(Purchased Reagent)		Fe	10000 ug/mL
.MEA_MG_STK_00007	08/17/18		Ultra Scientific, Lot CM-0429		(Purchased Reagent)		Mg	10000 ug/mL
MEI_08_ICSAB_00096	12/23/15	07/08/15	1% HNO3, Lot 2833593	500 mL	MEA_Ag_STK_00003	0.1 mL	Silver	0.2 ug/mL
					MEA_S_STK_00019	0.05 mL	Sulfur	1 ug/mL
					MEI_ICSAB_STK_00019	50 mL	Al	500.6 ug/mL
							Arsenic	0.1 ug/mL
							Barium	0.5 ug/mL
							Be	0.5 ug/mL
							Ca	500.5 ug/mL
							Cadmium	1 ug/mL
							Chromium	0.5 ug/mL

REAGENT TRACEABILITY SUMMARY

Lab Name: TestAmerica Buffalo Job No.: 480-89453-1

SDG No.:

Reagent ID	Exp Date	Prep Date	Dilutant Used	Reagent Final Volume	Parent Reagent		Analyte	Concentration
					Reagent ID	Volume Added		
							Co	0.5 ug/mL
							Cu	0.5 ug/mL
							Fe	100 ug/mL
							Lead	0.05 ug/mL
							Li	0.5 ug/mL
							Mg	500.6 ug/mL
							Mn	0.5 ug/mL
							Ni	1 ug/mL
							Sb	0.6 ug/mL
							Selenium	0.05 ug/mL
							Si	1 ug/mL
							Sr	0.5 ug/mL
							Tl	0.1 ug/mL
							V	0.5 ug/mL
							Zn	1 ug/mL
.MEA_Ag_STK_00003	05/31/16		Ultra Scientific, Lot K00335		(Purchased Reagent)		Silver	1000 ug/mL
.MEA_S_STK_00019	12/23/15		High Purity, Lot 1326810		(Purchased Reagent)		Sulfur	10000 ug/mL
.MEI_ICSAB_STK_00019	01/31/16		Ultra Scientific, Lot CL-5319		(Purchased Reagent)		Al	5006 ug/mL
							Arsenic	1 ug/mL
							Barium	5 ug/mL
							Be	5 ug/mL
							Ca	5005 ug/mL
							Cadmium	10 ug/mL
							Chromium	5 ug/mL
							Co	5 ug/mL
							Cu	5 ug/mL
							Fe	1000 ug/mL
							Lead	0.5 ug/mL
							Li	5 ug/mL
							Mg	5006 ug/mL
							Mn	5 ug/mL
							Ni	10 ug/mL
							Sb	6 ug/mL
							Selenium	0.5 ug/mL
							Si	10 ug/mL
							Sr	5 ug/mL
							Tl	1 ug/mL
							V	5 ug/mL
							Zn	10 ug/mL
MEI_09_CCV_00200	01/08/16	10/05/15	1% HNO3, Lot 2993303	2000 mL	MEI_CCV_A_STK_00009	10 mL	Arsenic	0.5 ug/mL
							Barium	0.5 ug/mL
							Cadmium	0.5 ug/mL
							Chromium	0.5 ug/mL
							Lead	0.5 ug/mL
							Selenium	0.5 ug/mL
					MEI_CCV_Ag_00008	1 mL	Silver	0.5 ug/mL
.MEI_CCV_A_STK_00009	01/08/16		High-Purity, Lot 1500517		(Purchased Reagent)		Arsenic	100 ug/mL

REAGENT TRACEABILITY SUMMARY

Lab Name: TestAmerica Buffalo Job No.: 480-89453-1

SDG No.:

Reagent ID	Exp Date	Prep Date	Dilutant Used	Reagent Final Volume	Parent Reagent		Analyte	Concentration
					Reagent ID	Volume Added		
							Barium	100 ug/mL
							Cadmium	100 ug/mL
							Chromium	100 ug/mL
							Lead	100 ug/mL
							Selenium	100 ug/mL
.MEI_CCV_Ag_00008	09/17/17		High-Purity, Lot 1420628		(Purchased Reagent)		Silver	1000 ug/mL
MEI_10_CCVL_00082	01/24/16	10/20/15	1% HNO3, Lot 3033467	2000 mL	MEI_CRI STK2_00007	20 mL	Arsenic	0.015 mg/L
							Cadmium	0.002 mg/L
							Lead	0.01 mg/L
							Selenium	0.025 mg/L
							Silver	0.006 mg/L
					MEI_CRI STOCK_00019	20 mL	Arsenic	0.015 mg/L
							Barium	0.002 mg/L
							Cadmium	0.002 mg/L
							Chromium	0.004 mg/L
							Lead	0.01 mg/L
							Selenium	0.025 mg/L
							Silver	0.006 mg/L
.MEI_CRI STK2_00007	01/24/16	09/21/15	6%HNO3 5%HCL, Lot 2487631	1000 mL	MEA_As_STK_00003	0.05 mL	Arsenic	0.5 ug/mL
					MEA_Cd_STK_00003	0.01 mL	Cadmium	0.1 ug/mL
					MEA_PB_STK_00006	0.05 mL	Lead	0.5 ug/mL
					MEA_Se_STK_00004	0.1 mL	Selenium	1 ug/mL
					MEI_CCV_Ag_00007	0.3 mL	Silver	0.3 ug/mL
..MEA_As_STK_00003	05/25/18		Ultra Scientific, Lot T00590		(Purchased Reagent)		Arsenic	10000 ug/mL
..MEA_Cd_STK_00003	01/24/16		Ultra Scientific, Lot L00406		(Purchased Reagent)		Cadmium	10000 ug/mL
..MEA_PB_STK_00006	06/25/17		Ultra Scientific, Lot M00611		(Purchased Reagent)		Lead	10000 ug/mL
..MEA_Se_STK_00004	11/01/16		Ultra Scientific, Lot P01005		(Purchased Reagent)		Selenium	10000 ug/mL
..MEI_CCV_Ag_00007	03/25/18		Ultra, Lot M00474		(Purchased Reagent)		Silver	1000 ug/mL
.MEI_CRI STOCK_00019	01/24/16	09/22/15	6%HNO3 5%HCL, Lot 222	1000 mL	MEA_As_STK_00003	0.1 mL	Arsenic	1 ug/mL
					MEA_Ba_STK_00004	0.02 mL	Barium	0.2 ug/mL
					MEA_Cd_STK_00003	0.01 mL	Cadmium	0.1 ug/mL
					MEA_Cr_STK_00003	0.04 mL	Chromium	0.4 ug/mL
					MEA_PB_STK_00006	0.05 mL	Lead	0.5 ug/mL
					MEA_Se_STK_00004	0.15 mL	Selenium	1.5 ug/mL
					MEI_CCV_Ag_00007	0.3 mL	Silver	0.3 ug/mL
..MEA_As_STK_00003	05/25/18		Ultra Scientific, Lot T00590		(Purchased Reagent)		Arsenic	10000 ug/mL
..MEA_Ba_STK_00004	07/10/17		Ultra Scientific, Lot L01142		(Purchased Reagent)		Barium	10000 ug/mL
..MEA_Cd_STK_00003	01/24/16		Ultra Scientific, Lot L00406		(Purchased Reagent)		Cadmium	10000 ug/mL
..MEA_Cr_STK_00003	05/25/18		Ultra Scientific, Lot cl-4304		(Purchased Reagent)		Chromium	10000 ug/mL
..MEA_PB_STK_00006	06/25/17		Ultra Scientific, Lot M00611		(Purchased Reagent)		Lead	10000 ug/mL
..MEA_Se_STK_00004	11/01/16		Ultra Scientific, Lot P01005		(Purchased Reagent)		Selenium	10000 ug/mL
..MEI_CCV_Ag_00007	03/25/18		Ultra, Lot M00474		(Purchased Reagent)		Silver	1000 ug/mL

REAGENT TRACEABILITY SUMMARY

Lab Name: TestAmerica Pittsburgh Job No.: 480-89453-1

SDG No.:

Reagent ID	Exp Date	Prep Date	Dilutant Used	Reagent Final Volume	Parent Reagent		Analyte	Concentration
					Reagent ID	Volume Added		
MCCV1X_00082	12/31/15	11/09/15	2% Nitric Acid, Lot 1241747	500 mL	MCALSPECAREV_00006	10 mL	Arsenic	0.1 ppm
							Barium	0.1 ppm
							Cadmium	0.1 ppm
							Chromium	0.1 ppm
							Lead	0.1 ppm
							Mg	50 ppm
							Selenium	0.1 ppm
							Silver	0.1 ppm
.MCALSPECAREV_00006	06/01/16	Inorganic Ventures, Lot J2-MEB575123			(Purchased Reagent)		Arsenic	5 ppm
							Barium	5 ppm
							Cadmium	5 ppm
							Chromium	5 ppm
							Lead	5 ppm
							Mg	2500 ppm
							Selenium	5 ppm
							Silver	5 ppm
MCRIX_00075	12/30/15	11/06/15	HNO3, Lot 1191081	250 mL	MMSCRI-1B_00005	1 mL	Arsenic	0.001 ppm
							Barium	0.01 ppm
							Cadmium	0.001 ppm
							Chromium	0.002 ppm
							Lead	0.001 ppm
							Selenium	0.005 ppm
							Silver	0.001 ppm
.MMSCRI-1B_00005	04/01/16	Inorganic Ventures, Lot J2-MEB572092			(Purchased Reagent)		Arsenic	0.25 ppm
							Barium	2.5 ppm
							Cadmium	0.25 ppm
							Chromium	0.5 ppm
							Lead	0.25 ppm
							Selenium	1.25 ppm
							Silver	0.25 ppm
MICSABX_00078	12/31/15	11/09/15	2% Nitric Acid, Lot J38N82	100 mL	M6020ICS-0A_00006	10 mL	Al	100 ppm
							Ca	100 ppm
							Fe	100 ppm
							K	100 ppm
							Mg	100 ppm
							Mo	2 ppm
							Na	100 ppm
							Ti	2 ppm
					M6020ICS-0B_00007	1 mL	Arsenic	0.02 ppm
							Cadmium	0.02 ppm
							Chromium	0.02 ppm
							Co	0.02 ppm
							Cu	0.02 ppm
							Mn	0.022 ppm
							Ni	0.02 ppm

REAGENT TRACEABILITY SUMMARY

Lab Name: TestAmerica Pittsburgh Job No.: 480-89453-1

SDG No.:

Reagent ID	Exp Date	Prep Date	Dilutant Used	Reagent Final Volume	Parent Reagent		Analyte	Concentration
					Reagent ID	Volume Added		
							Silver	0.02 ppm
							Zn	0.025 ppm
					MMSICSAB-1_00008	0.2 mL	Barium	0.02 ppm
							Be	0.02 ppm
							Lead	0.02 ppm
							Sr	0.025 ppm
							Tl	0.02 ppm
							V	0.02 ppm
					MMSICSAB-2_00007	0.2 mL	B	0.05 ppm
							Sb	0.02 ppm
							Selenium	0.05 ppm
							Si	0.5 ppm
							Sn	0.1 ppm
.M6020ICS-0A_00006	01/26/18	Inorganic Ventures, Lot J2-MEB533111			(Purchased Reagent)		Al	1000 ppm
							Ca	1000 ppm
							Fe	1000 ppm
							K	1000 ppm
							Mg	1000 ppm
							Mo	20 ppm
							Na	1000 ppm
							Ti	20 ppm
.M6020ICS-0B_00007	01/26/18	Inorganic Ventures, Lot J2-MEB569107			(Purchased Reagent)		Arsenic	2 ppm
							Cadmium	2 ppm
							Chromium	2 ppm
							Co	2 ppm
							Cu	2 ppm
							Mn	2.2 ppm
							Ni	2 ppm
							Silver	2 ppm
							Zn	2.5 ppm
.MMSICSAB-1_00008	06/01/16	Inorganic Ventures, Lot J2-MEB575125			(Purchased Reagent)		Barium	10 ppm
							Be	10 ppm
							Lead	10 ppm
							Sr	12.5 ppm
							Tl	10 ppm
							V	10 ppm
.MMSICSAB-2_00007	06/01/16	Inorganic Ventures, Lot J2-MEB575126			(Purchased Reagent)		B	25 ppm
							Sb	10 ppm
							Selenium	25 ppm
							Si	250 ppm
							Sn	50 ppm
MICSAX_00074	12/31/15	11/09/15	DI Water, Lot J38N82	100 mL	M6020ICS-0A_00006	10 mL	Al	100 ppm
							Ca	100 ppm
							Fe	100 ppm
							K	100 ppm
							Mg	100 ppm
							Mo	2 ppm

REAGENT TRACEABILITY SUMMARY

Lab Name: TestAmerica Pittsburgh Job No.: 480-89453-1

SDG No.:

Reagent ID	Exp Date	Prep Date	Dilutant Used	Reagent Final Volume	Parent Reagent		Analyte	Concentration
					Reagent ID	Volume Added		
							Na	100 ppm
							Ti	2 ppm
.M6020ICS-0A_00006	01/26/18	Inorganic Ventures, Lot J2-MEB533111			(Purchased Reagent)		Al	1000 ppm
							Ca	1000 ppm
							Fe	1000 ppm
							K	1000 ppm
							Mg	1000 ppm
							Mo	20 ppm
							Na	1000 ppm
							Ti	20 ppm
MICVX_00038	11/30/15	10/23/15	2% Nitric Acid, Lot 25106	250 mg/L	MICPMSICV_00018	10 mg/L	Arsenic	0.08 mg/L
							Barium	0.08 mg/L
							Cadmium	0.08 mg/L
							Chromium	0.08 mg/L
							Lead	0.08 mg/L
							Mg	40 mg/L
							Selenium	0.08 mg/L
							Silver	0.08 mg/L
.MICPMSICV_00018	11/30/15	SPEX CertiPrep, Lot 7-230WL			(Purchased Reagent)		Arsenic	2 ppm
							Barium	2 ppm
							Cadmium	2 ppm
							Chromium	2 ppm
							Lead	2 ppm
							Mg	1000 ppm
							Selenium	2 ppm
							Silver	2 ppm
MSTD2X_00053	12/31/15	11/09/15	DI Water, Lot 1241717	250 mL	MCALSPECAREV_00006	10 mg/L	Arsenic	0.2 ppm
							Barium	0.2 ppm
							Cadmium	0.2 ppm
							Chromium	0.2 ppm
							Lead	0.2 ppm
							Selenium	0.2 ppm
							Silver	0.2 ppm
.MCALSPECAREV_00006	06/01/16	Inorganic Ventures, Lot J2-MEB575123			(Purchased Reagent)		Arsenic	5 ppm
							Barium	5 ppm
							Cadmium	5 ppm
							Chromium	5 ppm
							Lead	5 ppm
							Selenium	5 ppm
							Silver	5 ppm
MTAPITTICPMS_00022	05/01/16	INORGANIC VENTURES, Lot G2-MEB506053			(Purchased Reagent)		Al	200 ug/mL
							Arsenic	4 ug/mL
							B	100 ug/mL
							Barium	200 ug/mL
							Be	5 ug/mL
							Cadmium	5 ug/mL

REAGENT TRACEABILITY SUMMARY

Lab Name: TestAmerica Pittsburgh Job No.: 480-89453-1

SDG No.:

Reagent ID	Exp Date	Prep Date	Dilutant Used	Reagent Final Volume	Parent Reagent		Analyte	Concentration
					Reagent ID	Volume Added		
							Chromium	20 ug/mL
							Co	50 ug/mL
							Cu	25 ug/mL
							Fe	100 ug/mL
							Lead	2 ug/mL
							Mn	50 ug/mL
							Ni	50 ug/mL
							Selenium	1 ug/mL
							Silver	5 ug/mL
							Sr	100 ug/mL
							Tl	5 ug/mL
							V	50 ug/mL
							Zn	50 ug/mL
MTAPITTMSA_00027	11/01/16	INORGANIC VENTURES, Lot J2-MEB584008			(Purchased Reagent)		Ca	5000 ug/mL
							K	5000 ug/mL
							Mg	5000 ug/mL
							Na	5000 ug/mL
MTAPITTMSC_00033	11/01/16	Inorganic Ventures, Lot J2-MEB584009			(Purchased Reagent)		Mo	100 ug/mL
							Sb	50 ug/mL
							Si	1000 ug/mL
							SiO2	2140 ug/mL
							Sn	200 ug/mL
							Ti	100 ug/mL

Certification Summary

Client: U.S. Army Construction Engineering Resea
Project/Site: Cerl Gasifier - Research Project

TestAmerica Job ID: 480-89453-1

Laboratory	Authority	Program	EPA Region	Certification ID
TestAmerica Buffalo	California	State Program	9	1169CA
TestAmerica Buffalo	Connecticut	State Program	1	PH-0568
TestAmerica Buffalo	Florida	NELAP	4	E87672
TestAmerica Buffalo	Georgia	State Program	4	956
TestAmerica Buffalo	Georgia	State Program	4	N/A
TestAmerica Buffalo	Illinois	NELAP	5	200003
TestAmerica Buffalo	Iowa	State Program	7	374
TestAmerica Buffalo	Kansas	NELAP	7	E-10187
TestAmerica Buffalo	Kentucky (DW)	State Program	4	90029
TestAmerica Buffalo	Kentucky (UST)	State Program	4	30
TestAmerica Buffalo	Kentucky (WW)	State Program	4	90029
TestAmerica Buffalo	Louisiana	NELAP	6	02031
TestAmerica Buffalo	Maine	State Program	1	NY00044
TestAmerica Buffalo	Maryland	State Program	3	294
TestAmerica Buffalo	Massachusetts	State Program	1	M-NY044
TestAmerica Buffalo	Michigan	State Program	5	9937
TestAmerica Buffalo	Minnesota	NELAP	5	036-999-337
TestAmerica Buffalo	New Hampshire	NELAP Primary AB	1	2973
TestAmerica Buffalo	New Hampshire	NELAP Secondary AB	1	2337
TestAmerica Buffalo	New Jersey	NELAP	2	NY455
TestAmerica Buffalo	New York	NELAP	2	10026
TestAmerica Buffalo	North Dakota	State Program	8	R-176
TestAmerica Buffalo	Oklahoma	State Program	6	9421
TestAmerica Buffalo	Oregon	NELAP	10	NY200003
TestAmerica Buffalo	Pennsylvania	NELAP	3	68-00281
TestAmerica Buffalo	Rhode Island	State Program	1	LAO00328
TestAmerica Buffalo	Tennessee	State Program	4	TN02970
TestAmerica Buffalo	Texas	NELAP	6	T104704412-15-6
TestAmerica Buffalo	USDA	Federal		P330-11-00386
TestAmerica Buffalo	Virginia	NELAP	3	460185
TestAmerica Buffalo	Washington	State Program	10	C784
TestAmerica Buffalo	West Virginia DEP	State Program	3	252
TestAmerica Buffalo	Wisconsin	State Program	5	998310390
TestAmerica Pittsburgh	Arkansas DEQ	State Program	6	88-0690
TestAmerica Pittsburgh	California	State Program	9	2891
TestAmerica Pittsburgh	Connecticut	State Program	1	PH-0688
TestAmerica Pittsburgh	Florida	NELAP	4	E871008
TestAmerica Pittsburgh	Illinois	NELAP	5	200005
TestAmerica Pittsburgh	Kansas	NELAP	7	E-10350
TestAmerica Pittsburgh	Louisiana	NELAP	6	04041
TestAmerica Pittsburgh	New Hampshire	NELAP	1	2030
TestAmerica Pittsburgh	New Jersey	NELAP	2	PA005
TestAmerica Pittsburgh	New York	NELAP	2	11182
TestAmerica Pittsburgh	North Carolina (WW/SW)	State Program	4	434
TestAmerica Pittsburgh	Pennsylvania	NELAP	3	02-00416
TestAmerica Pittsburgh	South Carolina	State Program	4	89014
TestAmerica Pittsburgh	Texas	NELAP	6	T104704528-15-2
TestAmerica Pittsburgh	US Fish & Wildlife	Federal		LE94312A-1
TestAmerica Pittsburgh	USDA	Federal		P330-10-00139
TestAmerica Pittsburgh	USDA	Federal		P-Soil-01
TestAmerica Pittsburgh	Utah	NELAP	8	PA001462015-4
TestAmerica Pittsburgh	Virginia	NELAP	3	460189
TestAmerica Pittsburgh	West Virginia DEP	State Program	3	142
TestAmerica Pittsburgh	Wisconsin	State Program	5	998027800

Certification Summary

Client: U.S. Army Construction Engineering Resea
Project/Site: Cerl Gasifier - Research Project

TestAmerica Job ID: 480-89453-1

Laboratory	Authority	Program	EPA Region	Certification ID

Accreditation may not be offered or required for all methods and analytes reported in this package. Please contact your project manager for the laboratory's current list of certified methods and analytes.

METALS

COVER PAGE
METALS

Lab Name: TestAmerica Buffalo Job Number: 480-89453-1

SDG No.:

Project: Cerl Gasifier - Research Project

Client Sample ID	Lab Sample ID
A-01-020415-1600	480-89453-1
A-01-031915-1600	480-89453-2
A-01-040215-1505	480-89453-3
A-01-050815-1600	480-89453-4

Comments:

COVER PAGE
METALS

Lab Name: TestAmerica Pittsburgh Job Number: 480-89453-1

SDG No.:

Project: Cerl Gasifier - Research Project

Client Sample ID	Lab Sample ID
A-01-020415-1600	480-89453-1
A-01-031915-1600	480-89453-2
A-01-040215-1505	480-89453-3
A-01-050815-1600	480-89453-4

Comments:

1A-IN
INORGANIC ANALYSIS DATA SHEET
METALS

Client Sample ID: A-01-020415-1600
Lab Sample ID: 480-89453-1
Lab Name: TestAmerica Buffalo
Job No.: 480-89453-1
SDG ID.:
Matrix: Solid
Date Sampled: 02/04/2015 16:00
Reporting Basis: DRY
Date Received: 10/20/2015 09:20
% Solids: 89.4

CAS No.	Analyte	Result	RL	MDL	Units	C	Q	DIL	Method
7439-97-6	Mercury	ND	0.022	0.0091	mg/Kg		H	1	7471B

1A-IN
INORGANIC ANALYSIS DATA SHEET
METALS - TCLP

Client Sample ID: A-01-020415-1600
Lab Sample ID: 480-89453-1
Lab Name: TestAmerica Buffalo
Job No.: 480-89453-1
SDG ID.:
Matrix: Solid
Date Sampled: 02/04/2015 16:00
Reporting Basis: WET
Date Received: 10/20/2015 09:20

CAS No.	Analyte	Result	RL	MDL	Units	C	Q	DIL	Method
7440-38-2	Arsenic	ND	0.015	0.0056	mg/L		H	1	6010C
7440-39-3	Barium	3.2	1.0	0.10	mg/L		H	1	6010C
7440-43-9	Cadmium	ND	0.0020	0.00050	mg/L		H	1	6010C
7440-47-3	Chromium	ND	0.020	0.010	mg/L		H	1	6010C
7439-92-1	Lead	0.0040	0.020	0.0030	mg/L	J	H	1	6010C
7782-49-2	Selenium	ND	0.13	0.044	mg/L		H	5	6010C
7440-22-4	Silver	ND	0.0060	0.0017	mg/L		H	1	6010C
7439-97-6	Mercury	ND	0.00020	0.00012	mg/L		H	1	7470A

1A-IN
INORGANIC ANALYSIS DATA SHEET
METALS

Client Sample ID: A-01-031915-1600
Lab Sample ID: 480-89453-2
Lab Name: TestAmerica Buffalo
Job No.: 480-89453-1
SDG ID.:
Matrix: Solid
Date Sampled: 03/19/2015 16:00
Reporting Basis: DRY
Date Received: 10/20/2015 09:20
% Solids: 100.0

CAS No.	Analyte	Result	RL	MDL	Units	C	Q	DIL	Method
7439-97-6	Mercury	ND	0.021	0.0083	mg/Kg		H	1	7471B

1A-IN
INORGANIC ANALYSIS DATA SHEET
METALS - TCLP

Client Sample ID: A-01-031915-1600
Lab Sample ID: 480-89453-2
Lab Name: TestAmerica Buffalo
Job No.: 480-89453-1
SDG ID.:
Matrix: Solid
Date Sampled: 03/19/2015 16:00
Reporting Basis: WET
Date Received: 10/20/2015 09:20

CAS No.	Analyte	Result	RL	MDL	Units	C	Q	DIL	Method
7440-38-2	Arsenic	ND	0.015	0.0056	mg/L		H	1	6010C
7440-39-3	Barium	1.9	1.0	0.10	mg/L		H	1	6010C
7440-43-9	Cadmium	ND	0.0020	0.00050	mg/L		H	1	6010C
7440-47-3	Chromium	0.029	0.020	0.010	mg/L		H	1	6010C
7439-92-1	Lead	ND	0.020	0.0030	mg/L		H	1	6010C
7782-49-2	Selenium	ND	0.13	0.044	mg/L		H	5	6010C
7440-22-4	Silver	ND	0.0060	0.0017	mg/L		H	1	6010C
7439-97-6	Mercury	ND	0.00020	0.00012	mg/L		H	1	7470A

1A-IN
INORGANIC ANALYSIS DATA SHEET
METALS

Client Sample ID: A-01-040215-1505
Lab Sample ID: 480-89453-3
Lab Name: TestAmerica Buffalo
Job No.: 480-89453-1
SDG ID.:
Matrix: Solid
Date Sampled: 04/02/2015 15:05
Reporting Basis: DRY
Date Received: 10/20/2015 09:20
% Solids: 100.0

CAS No.	Analyte	Result	RL	MDL	Units	C	Q	DIL	Method
7439-97-6	Mercury	ND	0.020	0.0082	mg/Kg		H	1	7471B

1A-IN
INORGANIC ANALYSIS DATA SHEET
METALS - TCLP

Client Sample ID: A-01-040215-1505
Lab Sample ID: 480-89453-3
Lab Name: TestAmerica Buffalo
Job No.: 480-89453-1
SDG ID.:
Matrix: Solid
Date Sampled: 04/02/2015 15:05
Reporting Basis: WET
Date Received: 10/20/2015 09:20

CAS No.	Analyte	Result	RL	MDL	Units	C	Q	DIL	Method
7440-38-2	Arsenic	ND	0.015	0.0056	mg/L		H	1	6010C
7440-39-3	Barium	3.7	1.0	0.10	mg/L		H	1	6010C
7440-43-9	Cadmium	ND	0.0020	0.00050	mg/L		H	1	6010C
7440-47-3	Chromium	0.015	0.020	0.010	mg/L	J	H	1	6010C
7439-92-1	Lead	0.0040	0.020	0.0030	mg/L	J	H	1	6010C
7782-49-2	Selenium	ND	0.13	0.044	mg/L		H	5	6010C
7440-22-4	Silver	ND	0.0060	0.0017	mg/L		H	1	6010C
7439-97-6	Mercury	ND	0.00020	0.00012	mg/L		H	1	7470A

1A-IN
INORGANIC ANALYSIS DATA SHEET
METALS

Client Sample ID: A-01-050815-1600
Lab Sample ID: 480-89453-4
Lab Name: TestAmerica Buffalo
Job No.: 480-89453-1
SDG ID.:
Matrix: Solid
Date Sampled: 05/08/2015 16:00
Reporting Basis: DRY
Date Received: 10/20/2015 09:20
% Solids: 99.2

CAS No.	Analyte	Result	RL	MDL	Units	C	Q	DIL	Method
7439-97-6	Mercury	0.011	0.021	0.0083	mg/Kg	J	H	1	7471B

1A-IN
INORGANIC ANALYSIS DATA SHEET
METALS - TCLP

Client Sample ID: A-01-050815-1600
Lab Sample ID: 480-89453-4
Lab Name: TestAmerica Buffalo
Job No.: 480-89453-1
SDG ID.:
Matrix: Solid
Date Sampled: 05/08/2015 16:00
Reporting Basis: WET
Date Received: 10/20/2015 09:20

CAS No.	Analyte	Result	RL	MDL	Units	C	Q	DIL	Method
7440-38-2	Arsenic	ND	0.015	0.0056	mg/L			1	6010C
7440-39-3	Barium	3.8	1.0	0.10	mg/L		F1	1	6010C
7440-43-9	Cadmium	ND	0.0020	0.00050	mg/L			1	6010C
7440-47-3	Chromium	ND	0.020	0.010	mg/L			1	6010C
7439-92-1	Lead	0.0074	0.020	0.0030	mg/L	J		1	6010C
7782-49-2	Selenium	ND	0.13	0.044	mg/L			5	6010C
7440-22-4	Silver	ND	0.0060	0.0017	mg/L			1	6010C
7439-97-6	Mercury	ND	0.00020	0.00012	mg/L		H	1	7470A

1A-IN
INORGANIC ANALYSIS DATA SHEET
METALS

Client Sample ID: A-01-020415-1600
Lab Sample ID: 480-89453-1
Lab Name: TestAmerica Pittsburgh
Job No.: 480-89453-1
SDG ID.:
Matrix: Solid
Date Sampled: 02/04/2015 16:00
Reporting Basis: DRY
Date Received: 10/20/2015 09:20
% Solids: 89.4

CAS No.	Analyte	Result	RL	MDL	Units	C	Q	DIL	Method
7440-38-2	Arsenic	3.6	0.54	0.097	mg/Kg			5	6020A
7440-39-3	Barium	382	5.4	0.058	mg/Kg			5	6020A
7440-43-9	Cadmium	0.065	0.54	0.038	mg/Kg	J		5	6020A
7440-47-3	Chromium	663	1.1	0.033	mg/Kg		B	5	6020A
7440-22-4	Silver	0.21	0.54	0.021	mg/Kg	J		5	6020A
7439-92-1	Lead	0.70	0.54	0.020	mg/Kg			5	6020A
7782-49-2	Selenium	ND	2.7	0.27	mg/Kg			5	6020A

1A-IN
INORGANIC ANALYSIS DATA SHEET
METALS

Client Sample ID: A-01-031915-1600
Lab Sample ID: 480-89453-2
Lab Name: TestAmerica Pittsburgh
Job No.: 480-89453-1
SDG ID.:
Matrix: Solid
Date Sampled: 03/19/2015 16:00
Reporting Basis: DRY
Date Received: 10/20/2015 09:20
% Solids: 100.0

CAS No.	Analyte	Result	RL	MDL	Units	C	Q	DIL	Method
7440-38-2	Arsenic	3.3	0.48	0.086	mg/Kg			5	6020A
7440-39-3	Barium	350	4.8	0.051	mg/Kg			5	6020A
7440-43-9	Cadmium	ND	0.48	0.033	mg/Kg			5	6020A
7440-47-3	Chromium	636	0.95	0.029	mg/Kg		B	5	6020A
7440-22-4	Silver	0.15	0.48	0.019	mg/Kg	J		5	6020A
7439-92-1	Lead	0.76	0.48	0.018	mg/Kg			5	6020A
7782-49-2	Selenium	0.44	2.4	0.24	mg/Kg	J		5	6020A

1A-IN
INORGANIC ANALYSIS DATA SHEET
METALS

Client Sample ID: A-01-040215-1505
Lab Sample ID: 480-89453-3
Lab Name: TestAmerica Pittsburgh
Job No.: 480-89453-1
SDG ID.:
Matrix: Solid
Date Sampled: 04/02/2015 15:05
Reporting Basis: DRY
Date Received: 10/20/2015 09:20
% Solids: 100.0

CAS No.	Analyte	Result	RL	MDL	Units	C	Q	DIL	Method
7440-38-2	Arsenic	3.3	0.50	0.090	mg/Kg			5	6020A
7440-39-3	Barium	517	5.0	0.053	mg/Kg			5	6020A
7440-43-9	Cadmium	0.042	0.50	0.035	mg/Kg	J		5	6020A
7440-47-3	Chromium	337	0.99	0.030	mg/Kg		B	5	6020A
7440-22-4	Silver	0.12	0.50	0.019	mg/Kg	J		5	6020A
7439-92-1	Lead	1.0	0.50	0.019	mg/Kg			5	6020A
7782-49-2	Selenium	ND	2.5	0.25	mg/Kg			5	6020A

1A-IN
INORGANIC ANALYSIS DATA SHEET
METALS

Client Sample ID: A-01-050815-1600
Lab Sample ID: 480-89453-4
Lab Name: TestAmerica Pittsburgh
Job No.: 480-89453-1
SDG ID.:
Matrix: Solid
Date Sampled: 05/08/2015 16:00
Reporting Basis: DRY
Date Received: 10/20/2015 09:20
% Solids: 99.2

CAS No.	Analyte	Result	RL	MDL	Units	C	Q	DIL	Method
7440-38-2	Arsenic	1.9	0.48	0.088	mg/Kg			5	6020A
7440-39-3	Barium	351	4.8	0.052	mg/Kg			5	6020A
7440-43-9	Cadmium	ND	0.48	0.034	mg/Kg			5	6020A
7440-47-3	Chromium	197	0.97	0.030	mg/Kg		B	5	6020A
7440-22-4	Silver	0.11	0.48	0.019	mg/Kg	J		5	6020A
7439-92-1	Lead	2.5	0.48	0.018	mg/Kg			5	6020A
7782-49-2	Selenium	ND	2.4	0.24	mg/Kg			5	6020A

2A-IN
CALIBRATION VERIFICATIONS
METALS

Lab Name: TestAmerica Buffalo Job No.: 480-89453-1

SDG No.:

ICV Source: MEI_04_ICV_00286 Concentration Units: mg/L

CCV Source: MEI_09_CCV_00200

Analyte	ICV 480-270880/5 10/23/2015 16:08				CCV 480-270880/14 10/23/2015 19:51				CCV 480-270880/23 10/23/2015 20:30			
	Found	C	True	%R	Found	C	True	%R	Found	C	True	%R
Arsenic	0.362		0.375	96	0.511		0.500	102	0.517		0.500	103
Barium	0.374		0.375	100	0.518		0.500	104	0.519		0.500	104
Cadmium	0.366		0.375	98	0.515		0.500	103	0.517		0.500	103
Chromium	0.369		0.375	98	0.511		0.500	102	0.519		0.500	104
Lead	0.364		0.375	97	0.510		0.500	102	0.516		0.500	103
Selenium	0.367		0.375	98	0.510		0.500	102	0.520		0.500	104
Silver	0.371		0.375	99	0.518		0.500	104	0.524		0.500	105

Note! Calculations are performed before rounding to avoid round-off errors in calculated results.
Italicized analytes were not requested for this sequence.

2A-IN
CALIBRATION VERIFICATIONS
METALS

Lab Name: TestAmerica Buffalo Job No.: 480-89453-1

SDG No.:

ICV Source: MEI_04_ICV_00286 Concentration Units: mg/L

CCV Source: MEI_09_CCV_00200

Analyte	CCV 480-270880/31 10/23/2015 21:09											
	Found	C	True	%R	Found	C	True	%R	Found	C	True	%R
Arsenic	0.507		0.500	101								
Barium	0.510		0.500	102								
Cadmium	0.511		0.500	102								
Chromium	0.516		0.500	103								
Lead	0.516		0.500	103								
Selenium	0.507		0.500	101								
Silver	0.522		0.500	104								

Note! Calculations are performed before rounding to avoid round-off errors in calculated results.
Italicized analytes were not requested for this sequence.

2A-IN
CALIBRATION VERIFICATIONS
METALS

Lab Name: TestAmerica Buffalo Job No.: 480-89453-1

SDG No.:

ICV Source: MEI_10_CCVL_00082 Concentration Units: mg/L

CCV Source: MEI_10_CCVL_00082

Analyte	ICVL 480-270880/7 10/23/2015 16:14				CCVL 480-270880/16 10/23/2015 19:57				CCVL 480-270880/25 10/23/2015 20:37			
	Found	C	True	%R	Found	C	True	%R	Found	C	True	%R
Arsenic	0.0151		0.0150	101	0.0139	J	0.0150	92	0.0136	J	0.0150	91
Barium	0.00213		0.00200	107	0.00200		0.00200	100	0.00218		0.00200	109
Cadmium	0.00203		0.00200	102	0.00193	J	0.00200	97	0.00209		0.00200	105
Chromium	0.00404		0.00400	101	0.00356	J	0.00400	89	0.00399	J	0.00400	100
Lead	0.00818	J	0.0100	82	0.00914	J	0.0100	91	0.00945	J	0.0100	95
Selenium	0.0238	J	0.0250	95	0.0231	J	0.0250	92	0.0228	J	0.0250	91
Silver	0.00620		0.00600	103	0.00668		0.00600	111	0.00587	J	0.00600	98

Note! Calculations are performed before rounding to avoid round-off errors in calculated results.
Italicized analytes were not requested for this sequence.

2A-IN
CALIBRATION VERIFICATIONS
METALS

Lab Name: TestAmerica Buffalo Job No.: 480-89453-1

SDG No.:

ICV Source: MEI_10_CCVL_00082 Concentration Units: mg/L

CCV Source: MEI_10_CCVL_00082

Analyte	CCVL 480-270880/33 10/23/2015 21:15											
	Found	C	True	%R	Found	C	True	%R	Found	C	True	%R
Arsenic	0.0157		0.0150	105								
Barium	0.00251		0.00200	126								
Cadmium	0.00214		0.00200	107								
Chromium	0.00420		0.00400	105								
Lead	0.00976	J	0.0100	98								
Selenium	0.0270		0.0250	108								
Silver	0.00647		0.00600	108								

Note! Calculations are performed before rounding to avoid round-off errors in calculated results.
Italicized analytes were not requested for this sequence.

2A-IN
CALIBRATION VERIFICATIONS
METALS

Lab Name: TestAmerica Buffalo Job No.: 480-89453-1

SDG No.:

ICV Source: MEI_04_ICV_00286 Concentration Units: mg/L

CCV Source: MEI_09_CCV_00200

Analyte	ICV 480-271006/5 10/24/2015 09:45				CCV 480-271006/14 10/24/2015 10:18				CCV 480-271006/18 10/24/2015 10:56			
	Found	C	True	%R	Found	C	True	%R	Found	C	True	%R
Selenium	0.365		0.375	97	0.490		0.500	98	0.483		0.500	97
Arsenic	0.362		0.375	96	0.488		0.500	98	0.480		0.500	96
Barium	0.372		0.375	99	0.497		0.500	99	0.490		0.500	98
Cadmium	0.364		0.375	97	0.493		0.500	99	0.487		0.500	97
Chromium	0.366		0.375	98	0.493		0.500	99	0.486		0.500	97
Lead	0.363		0.375	97	0.492		0.500	98	0.485		0.500	97
Silver	0.369		0.375	98	0.495		0.500	99	0.490		0.500	98

Note! Calculations are performed before rounding to avoid round-off errors in calculated results.
Italicized analytes were not requested for this sequence.

2A-IN
CALIBRATION VERIFICATIONS
METALS

Lab Name: TestAmerica Buffalo Job No.: 480-89453-1

SDG No.:

ICV Source: MEI_04_ICV_00286 Concentration Units: mg/L

CCV Source: MEI_09_CCV_00200

Analyte	CCV 480-271006/28 10/24/2015 11:36											
	Found	C	True	%R	Found	C	True	%R	Found	C	True	%R
Selenium	0.495		0.500	99								
Arsenic	0.497		0.500	99								
Barium	0.504		0.500	101								
Cadmium	0.505		0.500	101								
Chromium	0.503		0.500	101								
Lead	0.506		0.500	101								
Silver	0.506		0.500	101								

Note! Calculations are performed before rounding to avoid round-off errors in calculated results.
Italicized analytes were not requested for this sequence.

2A-IN
CALIBRATION VERIFICATIONS
METALS

Lab Name: TestAmerica Buffalo Job No.: 480-89453-1

SDG No.:

ICV Source: MEI_10_CCVL_00082 Concentration Units: mg/L

CCV Source: MEI_10_CCVL_00082

Analyte	ICVL 480-271006/7 10/24/2015 09:52				CCVL 480-271006/16 10/24/2015 10:25				CCVL 480-271006/20 10/24/2015 11:03			
	Found	C	True	%R	Found	C	True	%R	Found	C	True	%R
Selenium	0.0216	J	0.0250	86	0.0192	J	0.0250	77	0.0204	J	0.0250	81
Arsenic	0.0119	J	0.0150	79	0.0143	J	0.0150	95	0.0137	J	0.0150	92
Barium	0.00194	J	0.00200	97	0.00196	J	0.00200	98	0.00197	J	0.00200	99
Cadmium	0.00200		0.00200	100	0.00229		0.00200	115	0.00214		0.00200	107
Chromium	0.00415		0.00400	104	0.00419		0.00400	105	0.00379	J	0.00400	95
Lead	0.00938	J	0.0100	94	0.00914	J	0.0100	91	0.00956	J	0.0100	96
Silver	0.00604		0.00600	101	0.00583	J	0.00600	97	0.00616		0.00600	103

Note! Calculations are performed before rounding to avoid round-off errors in calculated results.
Italicized analytes were not requested for this sequence.

2A-IN
CALIBRATION VERIFICATIONS
METALS

Lab Name: TestAmerica Buffalo Job No.: 480-89453-1

SDG No.:

ICV Source: MEI_10_CCVL_00082 Concentration Units: mg/L

CCV Source: MEI_10_CCVL_00082

Analyte	CCVL 480-271006/30 10/24/2015 11:42											
	Found	C	True	%R	Found	C	True	%R	Found	C	True	%R
Selenium	0.0210	J	0.0250	84								
Arsenic	0.0151		0.0150	101								
Barium	0.00205		0.00200	103								
Cadmium	0.00217		0.00200	109								
Chromium	0.00381	J	0.00400	95								
Lead	0.0102		0.0100	102								
Silver	0.00623		0.00600	104								

Note! Calculations are performed before rounding to avoid round-off errors in calculated results.
Italicized analytes were not requested for this sequence.

2A-IN
CALIBRATION VERIFICATIONS
METALS

Lab Name: TestAmerica Buffalo Job No.: 480-89453-1

SDG No.:

ICV Source: MEH_HG2_WKG_01023 Concentration Units: mg/L

CCV Source: MEH_HG2_WKG_01023

Analyte	ICV 480-270289/1 10/21/2015 16:34				ICVL 480-270289/3 10/21/2015 16:38				CCV 480-270289/16 10/21/2015 16:58			
	Found	C	True	%R	Found	C	True	%R	Found	C	True	%R
Mercury	0.00317		0.00300	106	0.000218		0.000200	109	0.00213		0.00200	107

Note! Calculations are performed before rounding to avoid round-off errors in calculated results.
Italicized analytes were not requested for this sequence.

2A-IN
CALIBRATION VERIFICATIONS
METALS

Lab Name: TestAmerica Buffalo Job No.: 480-89453-1

SDG No.:

ICV Source: MEH_HG2_WKG_01023 Concentration Units: mg/L

CCV Source: MEH_HG2_WKG_01023

Analyte	CCV 480-270289/28 10/21/2015 17:16				CCV 480-270289/38 10/21/2015 17:32				CCVL 480-270289/40 10/21/2015 17:35			
	Found	C	True	%R	Found	C	True	%R	Found	C	True	%R
Mercury	0.00209		0.00200	105	0.00212		0.00200	106	0.000187	J	0.000200	94

Note! Calculations are performed before rounding to avoid round-off errors in calculated results.
Italicized analytes were not requested for this sequence.

2A-IN
CALIBRATION VERIFICATIONS
METALS

Lab Name: TestAmerica Buffalo Job No.: 480-89453-1

SDG No.:

ICV Source: MEH_HG2_WKG_01024 Concentration Units: mg/L

CCV Source: MEH_HG2_WKG_01024

Analyte	ICV 480-270525/1 10/22/2015 15:26				ICVL 480-270525/3 10/22/2015 15:29				CCV 480-270525/40 10/22/2015 16:36			
	Found	C	True	%R	Found	C	True	%R	Found	C	True	%R
Mercury	0.00315		0.00300	105	0.000242		0.000200	121	0.00207		0.00200	104

Note! Calculations are performed before rounding to avoid round-off errors in calculated results.
Italicized analytes were not requested for this sequence.

2A-IN
CALIBRATION VERIFICATIONS
METALS

Lab Name: TestAmerica Buffalo Job No.: 480-89453-1

SDG No.:

ICV Source: MEH_HG2_WKG_01024 Concentration Units: mg/L

CCV Source: MEH_HG2_WKG_01024

Analyte	CCV 480-270525/52 10/22/2015 16:59				CCV 480-270525/62 10/22/2015 17:17				CCVL 480-270525/64 10/22/2015 17:20			
	Found	C	True	%R	Found	C	True	%R	Found	C	True	%R
Mercury	0.00205		0.00200	103	0.00199		0.00200	100	0.000232		0.000200	116

Note! Calculations are performed before rounding to avoid round-off errors in calculated results.
Italicized analytes were not requested for this sequence.

2A-IN
CALIBRATION VERIFICATIONS
METALS

Lab Name: TestAmerica Pittsburgh Job No.: 480-89453-1

SDG No.:

ICV Source: MICVX_00038 Concentration Units: ug/L

CCV Source: MCCV1X_00082

Analyte	ICV 180-159963/5 11/09/2015 16:39				CCV 180-159963/10 11/09/2015 17:09				CCV 180-159963/22 11/09/2015 18:13			
	Found	C	True	%R	Found	C	True	%R	Found	C	True	%R
Arsenic	77.58		80.0	97	98.45		100	98	95.85		100	96
Barium	80.95		80.0	101	100.7		100	101	96.99		100	97
Cadmium	79.98		80.0	100	102.5		100	103	95.89		100	96
Chromium	79.71		80.0	100	102.4		100	102	99.07		100	99
Lead	80.82		80.0	101	104.3		100	104	97.93		100	98
Selenium	75.98		80.0	95	98.11		100	98	95.91		100	96
Silver	80.14		80.0	100	101.3		100	101	96.99		100	97
Magnesium	39520		40000	99	48800		50000	98	47590		50000	95

Note! Calculations are performed before rounding to avoid round-off errors in calculated results.
Italicized analytes were not requested for this sequence.

2A-IN
CALIBRATION VERIFICATIONS
METALS

Lab Name: TestAmerica Pittsburgh Job No.: 480-89453-1

SDG No.:

ICV Source: MICVX_00038 Concentration Units: ug/L

CCV Source: MCCV1X_00082

Analyte	CCV 180-159963/34 11/09/2015 19:26				CCV 180-159963/46 11/09/2015 20:35							
	Found	C	True	%R	Found	C	True	%R	Found	C	True	%R
Arsenic	97.98		100	98	98.94		100	99				
Barium	98.79		100	99	99.21		100	99				
Cadmium	98.20		100	98	99.61		100	100				
Chromium	99.88		100	100	102.0		100	102				
Lead	104.8		100	105	105.3		100	105				
Selenium	98.02		100	98	99.95		100	100				
Silver	99.96		100	100	101.0		100	101				
Magnesium	47620		50000	95	47890		50000	96				

Note! Calculations are performed before rounding to avoid round-off errors in calculated results.
Italicized analytes were not requested for this sequence.

2B-IN
CRQL CHECK STANDARD
METALS

Lab Name: TestAmerica Pittsburgh Job No.: 480-89453-1

SDG No.:

Method: 6020A Instrument ID: X

Lab Sample ID: CRI 180-159963/7 Concentration Units: ug/L

CRQL Check Standard Source: MCRIX_00075

Analyte	CRQL Check Standard				
	True	Found	Qualifiers	%R(1)	Limits
Arsenic	1.00	0.845	J	84	70-130
Barium	10.0	9.50	J	95	70-130
Cadmium	1.00	0.975	J	98	70-130
Chromium	2.00	1.86	J	93	70-130
Silver	1.00	1.04		104	70-130
Lead	1.00	1.03		103	70-130
Selenium	5.00	4.38	J	88	70-130

Lab Sample ID: CRI 180-159963/84 Concentration Units: ug/L

CRQL Check Standard Source: MCRIX_00075

Analyte	CRQL Check Standard				
	True	Found	Qualifiers	%R(1)	Limits
Arsenic	1.00	0.923	J	92	70-130
Barium	10.0	9.41	J	94	70-130
Cadmium	1.00	0.858	J	86	70-130
Chromium	2.00	2.01		100	70-130
Silver	1.00	0.968	J	97	70-130
Lead	1.00	0.969	J	97	70-130
Selenium	5.00	4.95	J	99	70-130

Note! Calculations are performed before rounding to avoid round-off errors in calculated results.

FORM IIB-IN

3-IN
INSTRUMENT BLANKS
METALS

Lab Name: TestAmerica Buffalo Job No.: 480-89453-1

SDG No.:

Concentration Units: mg/L

Analyte	RL	ICB 480-270880/6 10/23/2015 16:11		CCB 480-270880/15 10/23/2015 19:54		CCB 480-270880/24 10/23/2015 20:33		CCB 480-270880/32 10/23/2015 21:12	
		Found	C	Found	C	Found	C	Found	C
Arsenic	0.015	ND		ND		ND		ND	
Barium	0.0020	ND		ND		ND		ND	
Cadmium	0.0020	ND		ND		ND		ND	
Chromium	0.0040	ND		ND		ND		ND	
Lead	0.010	ND		ND		ND		ND	
Selenium	0.025	ND		ND		ND		ND	
Silver	0.0060	ND		ND		ND		ND	

Italicized analytes were not requested for this sequence.

3-IN
INSTRUMENT BLANKS
METALS

Lab Name: TestAmerica Buffalo Job No.: 480-89453-1

SDG No.:

Concentration Units: mg/L

Analyte	RL	ICB 480-271006/6 10/24/2015 09:48		CCB 480-271006/15 10/24/2015 10:21		CCB 480-271006/19 10/24/2015 11:00		CCB 480-271006/29 10/24/2015 11:39	
		Found	C	Found	C	Found	C	Found	C
Selenium	0.025	ND		ND		ND		ND	
Arsenic	0.015	ND		ND		ND		ND	
Barium	0.0020	ND		ND		ND		ND	
Cadmium	0.0020	ND		ND		ND		ND	
Chromium	0.0040	ND		ND		ND		ND	
Lead	0.010	ND		ND		ND		ND	
Silver	0.0060	ND		ND		ND		ND	

Italicized analytes were not requested for this sequence.

3-IN
INSTRUMENT BLANKS
METALS

Lab Name: TestAmerica Buffalo Job No.: 480-89453-1

SDG No.:

Concentration Units: mg/L

Analyte	RL	ICB 480-270289/2 10/21/2015 16:36		CCB 480-270289/17 10/21/2015 16:59		CCB 480-270289/29 10/21/2015 17:17		CCB 480-270289/39 10/21/2015 17:34	
		Found	C	Found	C	Found	C	Found	C
Mercury	0.00020	ND		ND		ND		ND	

Italicized analytes were not requested for this sequence.

3-IN
INSTRUMENT BLANKS
METALS

Lab Name: TestAmerica Buffalo Job No.: 480-89453-1

SDG No.:

Concentration Units: mg/L

Analyte	RL	ICB 480-270525/2 10/22/2015 15:28		CCB 480-270525/41 10/22/2015 16:38		CCB 480-270525/53 10/22/2015 17:01		CCB 480-270525/63 10/22/2015 17:18	
		Found	C	Found	C	Found	C	Found	C
Mercury	0.00020	ND		ND		ND		ND	

Italicized analytes were not requested for this sequence.

3-IN
INSTRUMENT BLANKS
METALS

Lab Name: TestAmerica Pittsburgh Job No.: 480-89453-1

SDG No.:

Concentration Units: ug/L

Analyte	RL	ICB 180-159963/6 11/09/2015 16:48		CCB1 180-159963/11 11/09/2015 17:17		CCB2 180-159963/23 11/09/2015 18:22		CCB3 180-159963/35 11/09/2015 19:35	
		Found	C	Found	C	Found	C	Found	C
Arsenic	1.0	ND		ND		ND		ND	
Barium	10.0	ND		ND		ND		ND	
Cadmium	1.0	ND		ND		ND		ND	
Chromium	2.0	ND		ND		ND		ND	
Lead	1.0	ND		ND		ND		ND	
Selenium	5.0	ND		ND		ND		ND	
Silver	1.0	ND		ND		ND		ND	
Magnesium	500	ND		ND		ND		ND	

Italicized analytes were not requested for this sequence.

3-IN
INSTRUMENT BLANKS
METALS

Lab Name: TestAmerica Pittsburgh Job No.: 480-89453-1

SDG No.:

Concentration Units: ug/L

Analyte	RL	CCB4 180-159963/47 11/09/2015 20:44							
		Found	C	Found	C	Found	C	Found	C
Arsenic	1.0	ND							
Barium	10.0	ND							
Cadmium	1.0	ND							
Chromium	2.0	ND							
Lead	1.0	ND							
Selenium	5.0	ND							
Silver	1.0	ND							
Magnesium	500	ND							

Italicized analytes were not requested for this sequence.

3-IN
METHOD BLANK
METALS

Lab Name: TestAmerica Buffalo Job No.: 480-89453-1

SDG No.:

Concentration Units: mg/L Lab Sample ID: MB 480-270374/2-A

Instrument Code: ICAP2 Batch No.: 270880

CAS No.	Analyte	Concentration	C	Q	Method
7440-38-2	Arsenic	ND			6010C
7440-39-3	Barium	ND			6010C
7440-43-9	Cadmium	ND			6010C
7440-47-3	Chromium	ND			6010C
7439-92-1	Lead	ND			6010C
7782-49-2	Selenium	ND			6010C
7440-22-4	Silver	ND			6010C

3-IN
METHOD BLANK
METALS - TCLP

Lab Name: TestAmerica Buffalo Job No.: 480-89453-1

SDG No.:

Concentration Units: mg/L Lab Sample ID: LB2 480-270052/1-C

Instrument Code: ICAP2 Batch No.: 270880

CAS No.	Analyte	Concentration	C	Q	Method
7440-38-2	Arsenic	ND			6010C
7440-39-3	Barium	ND			6010C
7440-43-9	Cadmium	ND			6010C
7440-47-3	Chromium	ND			6010C
7439-92-1	Lead	ND			6010C
7782-49-2	Selenium	ND			6010C
7440-22-4	Silver	ND			6010C

FORM III-IN

3-IN
METHOD BLANK
METALS

Lab Name: TestAmerica Buffalo Job No.: 480-89453-1

SDG No.:

Concentration Units: mg/L Lab Sample ID: MB 480-270385/2-A

Instrument Code: LEEMAN2 Batch No.: 270525

CAS No.	Analyte	Concentration	C	Q	Method
7439-97-6	Mercury	ND			7470A

FORM III-IN

3-IN
METHOD BLANK
METALS - TCLP

Lab Name: TestAmerica Buffalo Job No.: 480-89453-1

SDG No.:

Concentration Units: mg/L Lab Sample ID: LB2 480-270052/1-E

Instrument Code: LEEMAN2 Batch No.: 270525

CAS No.	Analyte	Concentration	C	Q	Method
7439-97-6	Mercury	ND			7470A

FORM III-IN

3-IN
METHOD BLANK
METALS

Lab Name: TestAmerica Buffalo Job No.: 480-89453-1

SDG No.:

Concentration Units: mg/Kg Lab Sample ID: MB 480-270135/1-A

Instrument Code: LEEMAN2 Batch No.: 270289

CAS No.	Analyte	Concentration	C	Q	Method
7439-97-6	Mercury	ND			7471B

FORM III-IN

3-IN
METHOD BLANK
METALS

Lab Name: TestAmerica Pittsburgh Job No.: 480-89453-1

SDG No.:

Concentration Units: mg/Kg Lab Sample ID: MB 180-159790/1-A

Instrument Code: X Batch No.: 159963

CAS No.	Analyte	Concentration	C	Q	Method
7440-38-2	Arsenic	ND			6020A
7440-39-3	Barium	ND			6020A
7440-43-9	Cadmium	ND			6020A
7440-47-3	Chromium	0.00942	J		6020A
7440-22-4	Silver	ND			6020A
7439-92-1	Lead	ND			6020A
7782-49-2	Selenium	ND			6020A

FORM III-IN

4A-IN
INTERFERENCE CHECK STANDARD
METALS

Lab Name: TestAmerica Buffalo Job No.: 480-89453-1

SDG No.:

Lab Sample ID: ICSA 480-270880/9 Instrument ID: ICAP2

Lab File ID: I2102315B-4.asc ICS Source: MEI_07_ICSA_00080

Concentration Units: mg/L

Analyte	True Solution A	Found Solution A	Percent Recovery
Arsenic		**-0.0098**	
Barium		**0.0006**	
Cadmium		**0.0011**	
Chromium		**0.0023**	
Lead		**0.0039**	
Selenium		**-0.0003**	
Silver		**0.0004**	
Aluminum	*500*	*525*	*105*
Antimony		*0.0045*	
Beryllium		*0.0001*	
Boron		*-0.0048*	
Calcium	*500*	*473*	*95*
Cobalt		*0.0036*	
Copper		*-0.0040*	
Iron	*200*	*185*	*93*
Lithium		*0.0153*	
Magnesium	*500*	*513*	*103*
Manganese		*0.0008*	
Molybdenum		*-0.0010*	
Nickel		*0.0006*	
Potassium		*-0.0148*	
Silicon		*-0.0190*	
Sodium		*0.0825*	
Strontium		*0.0056*	
Sulfur		*-0.0225*	
Thallium		*-0.0063*	
Tin		*-0.0004*	
Titanium		*0.0008*	
Vanadium		*-0.0021*	
Zinc		*0.0115*	

Calculations are performed before rounding to avoid round-off errors in calculated results.

FORM IVA-IN

4A-IN
INTERFERENCE CHECK STANDARD
METALS

Lab Name: TestAmerica Buffalo Job No.: 480-89453-1

SDG No.:

Lab Sample ID: ICSAB 480-270880/10 Instrument ID: ICAP2

Lab File ID: I2102315B-4.asc ICS Source: MEI_08_ICSAB_00096

Concentration Units: mg/L

Analyte	True Solution AB	Found Solution AB	Percent Recovery
Arsenic	**0.100**	**0.0902**	**90**
Barium	**0.500**	**0.486**	**97**
Cadmium	**1.00**	**1.01**	**101**
Chromium	**0.500**	**0.484**	**97**
Lead	**0.0500**	**0.0505**	**101**
Selenium	**0.0500**	**0.0508**	**102**
Silver	**0.200**	**0.217**	**109**
Aluminum	*501*	*500*	*100*
Antimony	*0.600*	*0.603*	*100*
Beryllium	*0.500*	*0.485*	*97*
Boron		*0.0007*	
Calcium	*501*	*459*	*92*
Cobalt	*0.500*	*0.480*	*96*
Copper	*0.500*	*0.504*	*101*
Iron	*100*	*92.8*	*93*
Lithium	*0.500*	*0.536*	*107*
Magnesium	*501*	*514*	*103*
Manganese	*0.500*	*0.469*	*94*
Molybdenum		*-0.0001*	
Nickel	*1.00*	*0.985*	*99*
Potassium		*0.0292*	
Silicon	*1.00*	*1.05*	*105*
Sodium		*0.105*	
Strontium	*0.500*	*0.503*	*101*
Sulfur	*1.00*	*1.08*	*108*
Thallium	*0.100*	*0.0910*	*91*
Tin		*-0.0010*	
Titanium		*0.0017*	
Vanadium	*0.500*	*0.505*	*101*
Zinc	*1.00*	*0.925*	*92*

Calculations are performed before rounding to avoid round-off errors in calculated results.

FORM IVA-IN

4A-IN
INTERFERENCE CHECK STANDARD
METALS

Lab Name: TestAmerica Buffalo Job No.: 480-89453-1

SDG No.:

Lab Sample ID: ICSA 480-271006/9 Instrument ID: ICAP2

Lab File ID: I2102415A-2.asc ICS Source: MEI_07_ICSA_00080

Concentration Units: mg/L

Analyte	True Solution A	Found Solution A	Percent Recovery
Selenium		**-0.0019**	
Aluminum	*500*	*509*	*102*
Antimony		*-0.0071*	
Arsenic		*-0.0093*	
Barium		*0.0006*	
Beryllium		*0.0001*	
Boron		*-0.0083*	
Cadmium		*0.0010*	
Calcium	*500*	*459*	*92*
Chromium		*0.0013*	
Cobalt		*0.0039*	
Copper		*-0.0040*	
Iron	*200*	*180*	*90*
Lead		*0.0010*	
Lithium		*0.0084*	
Magnesium	*500*	*498*	*100*
Manganese		*0.0008*	
Molybdenum		*-0.0012*	
Nickel		*0.0010*	
Potassium		*0.0141*	
Silicon		*-0.0089*	
Silver		*0.0001*	
Sodium		*0.0566*	
Strontium		*0.0054*	
Sulfur		*-0.0099*	
Thallium		*-0.0090*	
Tin		*-0.0005*	
Titanium		*0.0009*	
Vanadium		*-0.0015*	
Zinc		*0.0099*	

Calculations are performed before rounding to avoid round-off errors in calculated results.

FORM IVA-IN

4A-IN
INTERFERENCE CHECK STANDARD
METALS

Lab Name: TestAmerica Buffalo Job No.: 480-89453-1

SDG No.:

Lab Sample ID: ICSAB 480-271006/10 Instrument ID: ICAP2

Lab File ID: I2102415A-2.asc ICS Source: MEI_08_ICSAB_00096

Concentration Units: mg/L

Analyte	True Solution AB	Found Solution AB	Percent Recovery
Selenium	**0.0500**	**0.0510**	**102**
Aluminum	501	488	98
Antimony	0.600	0.580	97
Arsenic	0.100	0.0921	92
Barium	0.500	0.479	96
Beryllium	0.500	0.474	95
Boron		-0.0036	
Cadmium	1.00	0.982	98
Calcium	501	451	90
Chromium	0.500	0.475	95
Cobalt	0.500	0.471	94
Copper	0.500	0.499	100
Iron	100	90.4	90
Lead	0.0500	0.0464	93
Lithium	0.500	0.525	105
Magnesium	501	505	101
Manganese	0.500	0.461	92
Molybdenum		-0.0011	
Nickel	1.00	0.966	97
Potassium		0.0198	
Silicon	1.00	1.05	105
Silver	0.200	0.214	107
Sodium		0.0959	
Strontium	0.500	0.493	99
Sulfur	1.00	1.06	106
Thallium	0.100	0.0878	88
Tin		-0.0016	
Titanium		0.0016	
Vanadium	0.500	0.495	99
Zinc	1.00	0.984	98

Calculations are performed before rounding to avoid round-off errors in calculated results.

FORM IVA-IN

4A-IN
INTERFERENCE CHECK STANDARD
METALS

Lab Name: TestAmerica Pittsburgh Job No.: 480-89453-1

SDG No.:

Lab Sample ID: ICSA 180-159963/8 Instrument ID: X

Lab File ID: X51109A.xml ICS Source: MICSAX_00074

Concentration Units: ug/L

Analyte	True Solution A	Found Solution A	Percent Recovery
Arsenic		**0.256**	
Barium		**0.0480**	
Cadmium		**0.628**	
Chromium		**1.45**	
Lead		**0.220**	
Selenium		**0.0790**	
Silver		**0.0400**	
Aluminum	*100000*	*100800*	*101*
Antimony		*0.0450*	
Beryllium		*0.0300*	
Boron		*0.297*	
Calcium	*100000*	*104800*	*105*
Cobalt		*0.0850*	
Copper		*2.18*	
Iron	*100000*	*105700*	*106*
Magnesium	*100000*	*104200*	*104*
Manganese		*0.396*	
Molybdenum	*2000*	*2246*	*112*
Nickel		*0.204*	
Potassium	*100000*	*104000*	*104*
Silicon		*29.4*	
Sodium	*100000*	*102700*	*103*
Strontium		*0.763*	
Thallium		*0.0000*	
Tin		*-0.108*	
Titanium	*2000*	*2269*	*113*
Vanadium		*-0.0100*	
Zinc		*3.81*	

Calculations are performed before rounding to avoid round-off errors in calculated results.

FORM IVA-IN

4A-IN
INTERFERENCE CHECK STANDARD
METALS

Lab Name: TestAmerica Pittsburgh Job No.: 480-89453-1

SDG No.:

Lab Sample ID: ICSAB 180-159963/9 Instrument ID: X

Lab File ID: X51109A.xml ICS Source: MICSABX_00078

Concentration Units: ug/L

Analyte	True Solution AB	Found Solution AB	Percent Recovery
Arsenic	**20.0**	**19.6**	**98**
Barium	**20.0**	**19.9**	**100**
Cadmium	**20.0**	**21.0**	**105**
Chromium	**20.0**	**21.0**	**105**
Lead	**20.0**	**20.9**	**104**
Selenium	**50.0**	**49.1**	**98**
Silver	**20.0**	**19.2**	**96**
Aluminum	*100000*	*93757*	*94*
Antimony	*20.0*	*19.9*	*99*
Beryllium	*20.0*	*20.5*	*103*
Boron	*50.0*	*54.4*	*109*
Calcium	*100000*	*98117*	*98*
Cobalt	*20.0*	*20.0*	*100*
Copper	*20.0*	*20.6*	*103*
Iron	*100000*	*99317*	*99*
Magnesium	*100000*	*96623*	*97*
Manganese	*22.0*	*19.6*	*89*
Molybdenum	*2000*	*2096*	*105*
Nickel	*20.0*	*19.2*	*96*
Potassium	*100000*	*97567*	*98*
Silicon	*500*	*538*	*108*
Sodium	*100000*	*95160*	*95*
Strontium	*25.0*	*20.5*	*82*
Thallium	*20.0*	*20.3*	*101*
Tin	*100*	*101*	*101*
Titanium	*2000*	*2115*	*106*
Vanadium	*20.0*	*19.3*	*96*
Zinc	*25.0*	*22.7*	*91*

Calculations are performed before rounding to avoid round-off errors in calculated results.

FORM IVA-IN

5A-IN
MATRIX SPIKE SAMPLE RECOVERY
METALS

Client ID: A-01-020415-1600 MS
Lab ID: 480-89453-1 MS
Lab Name: TestAmerica Buffalo
Job No.: 480-89453-1
SDG No.:
Matrix: Solid
Concentration Units: mg/Kg
% Solids: 89.4

Analyte	SSR	C	Sample Result (SR)	C	Spike Added (SA)	%R	Control Limit %R	Q	Method
Mercury	0.378		ND		0.376	100	80-120		7471B

SSR = Spiked Sample Result

Calculations are performed before rounding to avoid round-off errors in calculated results.
Note - Results and Reporting Limits have been adjusted for dry weight.

FORM VA - IN

5A-IN
MATRIX SPIKE SAMPLE RECOVERY
METALS - TCLP

Client ID: A-01-050815-1600 MS
Lab ID: 480-89453-4 MS
Lab Name: TestAmerica Buffalo
Job No.: 480-89453-1
SDG No.:
Matrix: Solid
Concentration Units: mg/L
% Solids:

Analyte	SSR	C	Sample Result (SR)	C	Spike Added (SA)	%R	Control Limit %R	Q	Method
Arsenic	1.19		ND		1.00	119	75-125		6010C
Barium	4.78		3.8		1.00	100	75-125		6010C
Cadmium	1.13		ND		1.00	113	75-125		6010C
Chromium	0.999		ND		1.00	100	75-125		6010C
Lead	1.04		0.0074	J	1.00	103	75-125		6010C
Selenium	0.970		ND		1.00	97	75-125		6010C
Silver	1.17		ND		1.00	117	75-125		6010C
Mercury	0.00627		ND		0.00668	94	80-120		7470A

SSR = Spiked Sample Result

Calculations are performed before rounding to avoid round-off errors in calculated results.

FORM VA - IN

5A-IN
MATRIX SPIKE DUPLICATE SAMPLE RECOVERY
METALS

Client ID: A-01-020415-1600 MSD
Lab ID: 480-89453-1 MSD
Lab Name: TestAmerica Buffalo
Job No.: 480-89453-1
SDG No.:
Matrix: Solid
Concentration Units: mg/Kg
% Solids: 89.4

Analyte	(SDR)	C	Spike Added (SA)	%R	Control Limit %R	RPD	RPD Limit	Q	Method
Mercury	0.378		0.376	101	80-120	0	20		7471B

SDR = Sample Duplicate Result

Calculations are performed before rounding to avoid round-off errors in calculated results.
Note - Results and Reporting Limits have been adjusted for dry weight.

FORM VD - IN

5A-IN
MATRIX SPIKE DUPLICATE SAMPLE RECOVERY
METALS - TCLP

Client ID: A-01-050815-1600 MSD
Lab ID: 480-89453-4 MSD
Lab Name: TestAmerica Buffalo
Job No.: 480-89453-1
SDG No.:
Matrix: Solid
Concentration Units: mg/L
% Solids:

Analyte	(SDR)	C	Spike Added (SA)	%R	Control Limit %R	RPD	RPD Limit	Q	Method
Arsenic	1.12		1.00	112	75-125	6	20		6010C
Barium	4.48		1.00	71	75-125	6	20	F1	6010C
Cadmium	1.07		1.00	107	75-125	6	20		6010C
Chromium	0.942		1.00	94	75-125	6	20		6010C
Lead	0.982		1.00	97	75-125	6	20		6010C
Selenium	1.07		1.00	107	75-125	10	20		6010C
Silver	1.10		1.00	110	75-125	6	20		6010C
Mercury	0.00627		0.00668	94	80-120	0	20		7470A

SDR = Sample Duplicate Result

Calculations are performed before rounding to avoid round-off errors in calculated results.

FORM VD - IN

5B-IN
POST DIGESTION SPIKE SAMPLE RECOVERY
METALS - TCLP

Client ID: A-01-050815-1600 PDS
Lab ID: 480-89453-4 PDS
Lab Name: TestAmerica Buffalo
Job No.: 480-89453-1
SDG No.:
Matrix: Solid
Concentration Units: mg/L

Analyte	SSR	C	Sample Result (SR)	C	Spike Added (SA)	%R	Control Limit %R	Q	Method
Arsenic	1.18		ND		1.00	118	80-120		6010C
Barium	4.74		3.8		1.00	96	80-120		6010C
Cadmium	1.13		ND		1.00	113	80-120		6010C
Chromium	0.989		ND		1.00	99	80-120		6010C
Lead	1.03		0.0074	J	1.00	102	80-120		6010C
Selenium	5.10		ND		5.00	102	80-120		6010C
Silver	1.17		ND		1.00	117	80-120		6010C

SSR = Spiked Sample Result

Calculations are performed before rounding to avoid round-off errors in calculated results.

FORM VB - IN

7A-IN
LAB CONTROL SAMPLE
METALS

Lab ID: LCS 480-270374/3-A

Lab Name: TestAmerica Buffalo Job No.: 480-89453-1

Sample Matrix: Water LCS Source: MED_TCLP_00013

Analyte	Water(mg/L)							
	True	Found	C	%R	Limits		Q	Method
Arsenic	1.00	1.07		107	80	120		6010C
Barium	1.00	0.973	J	97	80	120		6010C
Cadmium	1.00	1.02		102	80	120		6010C
Chromium	1.00	0.982		98	80	120		6010C
Lead	1.00	0.980		98	80	120		6010C
Selenium	1.00	1.09		109	80	120		6010C
Silver	1.00	1.04		104	80	120		6010C

Calculations are performed before rounding to avoid round-off errors in calculated results.

FORM VIIA - IN

7A-IN
LAB CONTROL SAMPLE
METALS

Lab ID: LCS 480-270385/3-A

Lab Name: TestAmerica Buffalo Job No.: 480-89453-1

Sample Matrix: Water LCS Source: MEH_HG_TCLP_W_00073

Analyte	Water(mg/L)							
	True	Found	C	%R	Limits		Q	Method
Mercury	0.00668	0.00645		97	80	120		7470A

Calculations are performed before rounding to avoid round-off errors in calculated results.

FORM VIIA - IN

7A-IN
LCS-CERTIFIED REFERENCE MATERIAL
METALS

Lab ID: LCSSRM 480-270135/2-A

Lab Name: TestAmerica Buffalo Job No.: 480-89453-1

Sample Matrix: Solid LCS Source: MED_SRM_D085_00002

Analyte	Solid(mg/Kg)							
	True	Found	C	%R	Limits		Q	Method
Mercury	8.37	9.27		110.7	51.3	148.1		7471B

Calculations are performed before rounding to avoid round-off errors in calculated results.

FORM VIIA - IN

7A-IN
LAB CONTROL SAMPLE
METALS

Lab ID: LCS 180-159790/2-A

Lab Name: TestAmerica Pittsburgh Job No.: 480-89453-1

Sample Matrix: Solid LCS Source: MTAPITTICPMS_00022

Analyte	Solid(mg/Kg)							
	True	Found	C	%R	Limits		Q	Method
Arsenic	3.92	3.65		93	80	120		6020A
Barium	196	176.9		90	80	120		6020A
Cadmium	4.90	4.65		95	80	120		6020A
Chromium	19.6	20.66		105	80	120		6020A
Silver	4.90	4.72		96	80	120		6020A
Lead	1.96	1.97		100	80	120		6020A
Selenium	0.980	0.911		93	80	120		6020A

Calculations are performed before rounding to avoid round-off errors in calculated results.

FORM VIIA - IN

7D-IN
LAB CONTROL SAMPLE DUPLICATE
METALS

Lab ID: LCSD 180-159790/3-A

Lab Name: TestAmerica Pittsburgh Job No.: 480-89453-1

Sample Matrix: Solid LCS Source: MTAPITTICPMS_00022

Analyte	(SDR)	C	Spike Added	%R	Control Limit %R	RPD	RPD Limit	Q	Method
Arsenic	3.59		3.85	93	80-120	2	20		6020A
Barium	173.0		192	90	80-120	2	20		6020A
Cadmium	4.51		4.81	94	80-120	3	20		6020A
Chromium	20.06		19.2	104	80-120	3	20		6020A
Silver	4.67		4.81	97	80-120	1	20		6020A
Lead	1.94		1.92	101	80-120	1	20		6020A
Selenium	0.878		0.962	91	80-120	4	20		6020A

SDR = Spike Duplicate Results
Calculations are performed before rounding to avoid round-off errors in calculated results.

FORM VIID - IN

8-IN
ICP-AES AND ICP-MS SERIAL DILUTIONS
METALS - TCLP

Lab ID: 480-89453-4

SDG No:

Lab Name: TestAmerica Buffalo Job No: 480-89453-1

Matrix: Solid Concentration Units: mg/L

Analyte	Initial Sample Result (I)	C	Serial Dilution Result (S)	C	% Difference	Q	Method
Arsenic	ND		ND		NC		6010C
Barium	3.8		3.74	J	1.0		6010C
Cadmium	ND		ND		NC		6010C
Chromium	ND		ND		NC		6010C
Lead	0.0074	J	ND		NC		6010C
Selenium	ND		ND		NC		6010C
Silver	ND		ND		NC		6010C

Calculations are performed before rounding to avoid round-off errors in calculated results.

FORM VIII-IN

8-IN
ICP-AES AND ICP-MS SERIAL DILUTIONS
METALS

Lab ID: 480-89453-1

SDG No:

Lab Name: TestAmerica Buffalo Job No: 480-89453-1

Matrix: Solid Concentration Units: mg/Kg

Analyte	Initial Sample Result (I)	C	Serial Dilution Result (S)	C	% Difference	Q	Method
Mercury	ND		ND		NC		7471B

Calculations are performed before rounding to avoid round-off errors in calculated results.

FORM VIII-IN

8-IN
ICP-AES AND ICP-MS SERIAL DILUTIONS
METALS - TCLP

Lab ID: 480-89453-4

SDG No:

Lab Name: TestAmerica Buffalo Job No: 480-89453-1

Matrix: Solid Concentration Units: mg/L

Analyte	Initial Sample Result (I)	C	Serial Dilution Result (S)	C	% Difference	Q	Method
Mercury	ND		ND		NC		7470A

Calculations are performed before rounding to avoid round-off errors in calculated results.

FORM VIII-IN

9-IN
DETECTION LIMITS
METALS - TCLP

Lab Name: TestAmerica Buffalo Job Number: 480-89453-1

SDG Number:

Matrix: Solid Instrument ID: ICAP2

Method: 6010C MDL Date: 04/29/2015 13:01

Prep Method: 3010A

Leach Method: 1311

Analyte	Wavelength/ Mass	RL (mg/L)	MDL (mg/L)
Arsenic	189.042	0.015	0.00555
Barium	455.403	1	0.1
Cadmium	228.802	0.002	0.0005
Chromium	267.716	0.02	0.01
Lead	220.353	0.02	0.003
Selenium	196.090	0.025	0.0087
Silver	328.068	0.006	0.0017

FORM IX - IN

9-IN
CALIBRATION BLANK DETECTION LIMITS
METALS - TCLP

Lab Name: TestAmerica Buffalo Job Number: 480-89453-1

SDG Number:

Matrix: Solid Instrument ID: ICAP2

Method: 6010C XMDL Date: 04/29/2015 13:01

Analyte	Wavelength/ Mass	XRL (mg/L)	XMDL (mg/L)
Arsenic	189.042	0.015	0.00555
Barium	455.403	0.002	0.0007
Cadmium	228.802	0.002	0.0005
Chromium	267.716	0.004	0.001
Lead	220.353	0.01	0.003
Selenium	196.090	0.025	0.0087
Silver	328.068	0.006	0.0017

FORM IX - IN

9-IN
DETECTION LIMITS
METALS - TCLP

Lab Name: TestAmerica Buffalo Job Number: 480-89453-1

SDG Number:

Matrix: Solid Instrument ID: LEEMAN2

Method: 7470A MDL Date: 01/28/2010 00:00

Prep Method: 7470A

Leach Method: 1311

Analyte	Wavelength/ Mass	RL (mg/L)	MDL (mg/L)
Mercury	253.7	0.0002	0.00012

FORM IX - IN

9-IN
CALIBRATION BLANK DETECTION LIMITS
METALS - TCLP

Lab Name: TestAmerica Buffalo Job Number: 480-89453-1

SDG Number:

Matrix: Solid Instrument ID: LEEMAN2

Method: 7470A XMDL Date: 01/28/2010 00:00

Analyte	Wavelength/ Mass	XRL (mg/L)	XMDL (mg/L)
Mercury	253.7	0.0002	0.00012

FORM IX - IN

9-IN
DETECTION LIMITS
METALS

Lab Name: TestAmerica Buffalo Job Number: 480-89453-1

SDG Number:

Matrix: Solid Instrument ID: LEEMAN2

Method: 7471B MDL Date: 01/29/2010 00:00

Prep Method: 7471B

Analyte	Wavelength/ Mass	RL (mg/Kg)	MDL (mg/Kg)
Mercury	253.7	0.02	0.0081

FORM IX - IN

9-IN
CALIBRATION BLANK DETECTION LIMITS
METALS

Lab Name: TestAmerica Buffalo Job Number: 480-89453-1

SDG Number:

Matrix: Solid Instrument ID: LEEMAN2

Method: 7471B XMDL Date: 01/29/2010 00:00

Analyte	Wavelength/ Mass	XRL (mg/L)	XMDL (mg/L)
Mercury	253.7	0.0002	0.00012

FORM IX - IN

9-IN
DETECTION LIMITS
METALS

Lab Name: TestAmerica Pittsburgh Job Number: 480-89453-1

SDG Number:

Matrix: Solid Instrument ID: X

Method: 6020A MDL Date: 01/23/2010 19:04

Prep Method: 3050B

Analyte	Wavelength/ Mass	RL (mg/Kg)	MDL (mg/Kg)
Arsenic	75	0.1	0.0181
Barium	137	1	0.0107
Cadmium	111	0.1	0.007
Chromium	52	0.2	0.0061
Lead	208	0.1	0.0038
Selenium	82	0.5	0.0502
Silver	107	0.1	0.0039

9-IN
CALIBRATION BLANK DETECTION LIMITS
METALS

Lab Name: TestAmerica Pittsburgh Job Number: 480-89453-1

SDG Number:

Matrix: Solid Instrument ID: X

Method: 6020A XMDL Date: 01/23/2010 19:04

Analyte	Wavelength/ Mass	XRL (ug/L)	XMDL (ug/L)
Arsenic	75	1	0.2908
Barium	137	10	0.098
Cadmium	111	1	0.1144
Chromium	52	2	0.5433
Lead	208	1	0.0192
Selenium	82	5	0.4216
Silver	107	1	0.0362

10-IN
ICP-AES INTERELEMENT CORRECTION FACTORS
METALS

Lab Name: TestAmerica Buffalo Job Number: 480-89453-1

SDG No.:

ICP-AES Instrument ID: ICAP2 Date: 10/13/2015

Analyte	Wave Length	Al	As	Be	Ca	Cd	Co	Cr	Cu	Fe	Mg	Mn	Mo	Ni	Si
Aluminum	308.215														
Antimony	206.833							0.016886		-0.000038			-0.003460		
Arsenic	189.042							-0.016699					-0.001439		-0.00002242
Barium	455.403														
Beryllium	313.042														
Boron	208.959												0.045987		0.00077341
Cadmium	228.802		005232							-0.000007				-0.000183	
Calcium	317.933														
Chromium	267.716									-0.000009		0.000128			
Cobalt	228.616												-0.001422		
Copper	327.396				0.000028					-0.000012					
Iron	259.940										0.000214	-0.000349			
Lead	220.353	-0.000045					-0.000313		0.002016	0.000014		0.000089	-0.001660	0.000081	0.00011293
Lithium	670.784														
Magnesium	279.079											-0.005496	-0.016782		
Manganese	257.610	0.00005								0.000013					
Molybdenum	202.030									-0.000008		-0.000089			
Nickel	231.604									0.000035					
Potassium	766.490														
Selenium	196.090	-0.000116								-0.000019		0.000437			
Silicon	288.158							-0.001254							
Silver	328.068									-0.000013		-0.000015			
Sodium	589.592														
Strontium	407.771														
Sulfur	182.034	-0.000111													
Thallium	190.856	0.000021					0.004001								
Tin	189.989														
Titanium	334.904				0.000005			0.000199					0.000497		
Vanadium	292.402									0.000016			-0.003989		

X-IN

10-IN
ICP-AES INTERELEMENT CORRECTION FACTORS
METALS

Lab Name: TestAmerica Buffalo Job Number: 480-89453-1

SDG No.:

ICP-AES Instrument ID: ICAP2 Date: 10/13/2015

Analyte	Wave Length	Al	As	Be	Ca	Cd	Co	Cr	Cu	Fe	Mg	Mn	Mo	Ni	Si
Zinc	206.200							-0.001712							

X-IN

10-IN
ICP-AES INTERELEMENT CORRECTION FACTORS
METALS

Lab Name: TestAmerica Buffalo Job Number: 480-89453-1

SDG No.:

ICP-AES Instrument ID: ICAP2 Date: 10/13/2015

Analyte	Wave Length	Sn	Ti	Tl	V										
Aluminum	308.215				0.007523										
Antimony	206.833		0.000781												
Arsenic	189.042														
Barium	455.403														
Beryllium	313.042		-0.001012		0.000334										
Boron	208.959														
Cadmium	228.802														
Calcium	317.933														
Chromium	267.716														
Cobalt	228.616		0.001956												
Copper	327.396		-0.002019		-0.000724										
Iron	259.940														
Lead	220.353		-0.00454		-0.000044										
Lithium	670.784														
Magnesium	279.079		-0.003460												
Manganese	257.610				-0.000070										
Molybdenum	202.030														
Nickel	231.604														
Potassium	766.490														
Selenium	196.090														
Silicon	288.158		-0.022549		0.003607										
Silver	328.068		-0.000143		0.000018										
Sodium	589.592														
Strontium	407.771														
Sulfur	182.034														
Thallium	190.856		-0.000286		-0.0006667										
Tin	189.989		-0.000712												
Titanium	334.904														
Vanadium	292.402		0.000374												
Zinc	206.200														

X-IN

11-IN
LINEAR RANGES
METALS

Lab Name: TestAmerica Buffalo Job No: 480-89453-1

SDG No.:

Instrument ID: ICAP2 Date: 09/29/2015 14:49

Analyte	Integ. Time (Sec.)	Concentration (mg/L)	Method
Arsenic	15	30	6010C
Barium	15	10	6010C
Cadmium	15	5	6010C
Chromium	15	50	6010C
Lead	15	120	6010C
Selenium	15	60	6010C
Silver	15	3	6010C

11-IN
LINEAR RANGES
METALS

Lab Name: TestAmerica Buffalo Job No: 480-89453-1

SDG No.:

Instrument ID: LEEMAN2 Date: 10/13/2015 15:08

Analyte	Integ. Time (Sec.)	Concentration (ug/L)	Method
Mercury	10	10	7470A
Mercury	10	10	7471B

FORM XI - IN

11-IN
LINEAR RANGES
METALS

Lab Name: TestAmerica Pittsburgh Job No: 480-89453-1

SDG No.:

Instrument ID: X Date: 03/14/2011 22:35

Analyte	Integ. Time (Sec.)	Concentration (ug/L)	Method
Arsenic		4500	6020A
Barium		13500	6020A
Cadmium		13500	6020A
Chromium		13500	6020A
Silver		2500	6020A
Lead		20000	6020A
Selenium		4500	6020A

FORM XI - IN

12-IN
PREPARATION LOG
METALS

Lab Name: TestAmerica Buffalo Job No.: 480-89453-1

SDG No.:

Prep Method: 3010A

Lab Sample ID	Preparation Date	Prep Batch	Initial Weight	Initial Volume (mL)	Final Volume (mL)
LB2 480-270052/1-C	10/22/2015 11:30	270374		50	50
MB 480-270374/2-A	10/22/2015 11:30	270374		50	50
LCS 480-270374/3-A	10/22/2015 11:30	270374		50	50
480-89453-1	10/22/2015 11:30	270374		50	50
480-89453-2	10/22/2015 11:30	270374		50	50
480-89453-3	10/22/2015 11:30	270374		50	50
480-89453-4	10/22/2015 11:30	270374		50	50
480-89453-4 MS	10/22/2015 11:30	270374		50	50
480-89453-4 MSD	10/22/2015 11:30	270374		50	50

12-IN
PREPARATION LOG
METALS

Lab Name: TestAmerica Buffalo Job No.: 480-89453-1

SDG No.:

Prep Method: 7471B

Lab Sample ID	Preparation Date	Prep Batch	Initial Weight (g)	Initial Volume	Final Volume (mL)
MB 480-270135/1-A	10/21/2015 15:00	270135	+0.5937		50
LCSSRM 480-270135/2-A	10/21/2015 15:00	270135	+0.0239		50
480-89453-1	10/21/2015 15:00	270135	+0.5970		50
480-89453-1 MS	10/21/2015 15:00	270135	+0.5942		50
480-89453-1 MSD	10/21/2015 15:00	270135	+0.5954		50
480-89453-2	10/21/2015 15:00	270135	+0.5845		50
480-89453-3	10/21/2015 15:00	270135	+0.5921		50
480-89453-4	10/21/2015 15:00	270135	+0.5874		50

FORM XII-IN

12-IN
PREPARATION LOG
METALS

Lab Name: TestAmerica Buffalo Job No.: 480-89453-1

SDG No.:

Prep Method: 7470A

Lab Sample ID	Preparation Date	Prep Batch	Initial Weight	Initial Volume (mL)	Final Volume (mL)
LB2 480-270052/1-E	10/22/2015 12:15	270385		30	50
MB 480-270385/2-A	10/22/2015 12:15	270385		30	50
LCS 480-270385/3-A	10/22/2015 12:15	270385		30	50
480-89453-1	10/22/2015 12:15	270385		30	50
480-89453-2	10/22/2015 12:15	270385		30	50
480-89453-3	10/22/2015 12:15	270385		30	50
480-89453-4	10/22/2015 12:15	270385		30	50
480-89453-4 MS	10/22/2015 12:15	270385		30	50
480-89453-4 MSD	10/22/2015 12:15	270385		30	50

FORM XII-IN

12-IN
PREPARATION LOG
METALS

Lab Name: TestAmerica Pittsburgh Job No.: 480-89453-1

SDG No.:

Prep Method: 3050B

Lab Sample ID	Preparation Date	Prep Batch	Initial Weight (g)	Initial Volume	Final Volume (mL)
MB 180-159790/1-A	11/09/2015 12:44	159790	00001.04		100
LCS 180-159790/2-A	11/09/2015 12:44	159790	00001.02		100
LCSD 180-159790/3-A	11/09/2015 12:44	159790	00001.04		100
480-89453-1	11/09/2015 12:44	159790	00001.04		100
480-89453-2	11/09/2015 12:44	159790	00001.05		100
480-89453-3	11/09/2015 12:44	159790	00001.01		100
480-89453-4	11/09/2015 12:44	159790	00001.04		100

13-IN
ANALYSIS RUN LOG
METALS

Lab Name: TestAmerica Buffalo Job No.: 480-89453-1

SDG No.:

Instrument ID: ICAP2 Method: 6010C

Start Date: 10/23/2015 15:55 End Date: 10/23/2015 21:15

Lab Sample ID	D/F	Type	Time	Analytes																			
				Ag	As	Ba	Cd	Cr	Pb	Se													
ICIS 480-270880/1	1		15:55	X	X	X	X	X	X	X													
IC 480-270880/2			15:58	X	X	X	X	X	X	X													
IC 480-270880/3			16:01	X	X	X	X	X	X	X													
IC 480-270880/4			16:04	X	X	X	X	X	X	X													
ICV 480-270880/5	1		16:08	X	X	X	X	X	X	X													
ICB 480-270880/6	1		16:11	X	X	X	X	X	X	X													
ICVL 480-270880/7	1		16:14	X	X	X	X	X	X	X													
ZZZZZZ			16:17																				
ICSA 480-270880/9	1		16:20	X	X	X	X	X	X	X													
ICSAB 480-270880/10	1		16:24	X	X	X	X	X	X	X													
CCV 480-270880/11			16:27																				
CCB 480-270880/12			16:30																				
CCVL 480-270880/13			16:33																				
CCV 480-270880/14	1		19:51	X	X	X	X	X	X	X													
CCB 480-270880/15	1		19:54	X	X	X	X	X	X	X													
CCVL 480-270880/16	1		19:57	X	X	X	X	X	X	X													
LB2 480-270052/1-C	1	P	20:10	X	X	X	X	X	X	X													
MB 480-270374/2-A	1	T	20:14	X	X	X	X	X	X	X													
LCS 480-270374/3-A	1	T	20:17	X	X	X	X	X	X	X													
480-89453-1	1	P	20:20	X	X	X	X	X	X														
480-89453-2	1	P	20:23	X	X	X	X	X	X														
480-89453-3	1	P	20:27	X	X	X	X	X	X														
CCV 480-270880/23	1		20:30	X	X	X	X	X	X	X													
CCB 480-270880/24	1		20:33	X	X	X	X	X	X	X													
CCVL 480-270880/25	1		20:37	X	X	X	X	X	X	X													
480-89453-4	1	P	20:40	X	X	X	X	X	X														
480-89453-4 SD	5	P	20:43	X	X	X	X	X	X														
480-89453-4 PDS	1	P	20:47	X	X	X	X	X	X														
480-89453-4 MS	1	P	20:50	X	X	X	X	X	X														
480-89453-4 MSD	1	P	20:53	X	X	X	X	X	X														
CCV 480-270880/31	1		21:09	X	X	X	X	X	X	X													
CCB 480-270880/32	1		21:12	X	X	X	X	X	X	X													
CCVL 480-270880/33	1		21:15	X	X	X	X	X	X	X													

Prep Types
P = TCLP
T = Total/NA

13-IN
ANALYSIS RUN LOG
METALS

Lab Name: TestAmerica Buffalo Job No.: 480-89453-1

SDG No.:

Instrument ID: ICAP2 Method: 6010C

Start Date: 10/24/2015 09:32 End Date: 10/24/2015 11:42

Lab Sample ID	D/F	Type	Time	Analytes																		
				Se																		
ICIS 480-271006/1	1		09:32	X																		
IC 480-271006/2			09:36	X																		
IC 480-271006/3			09:39	X																		
IC 480-271006/4			09:42	X																		
ICV 480-271006/5	1		09:45	X																		
ICB 480-271006/6	1		09:48	X																		
ICVL 480-271006/7	1		09:52	X																		
CRI 480-271006/8			09:55																			
ICSA 480-271006/9	1		09:58	X																		
ICSAB 480-271006/10	1		10:02	X																		
CCV 480-271006/11			10:05																			
CCB 480-271006/12			10:08																			
CCVL 480-271006/13			10:12																			
CCV 480-271006/14	1		10:18	X																		
CCB 480-271006/15	1		10:21	X																		
CCVL 480-271006/16	1		10:25	X																		
480-89453-1	5	P	10:53	X																		
CCV 480-271006/18	1		10:56	X																		
CCB 480-271006/19	1		11:00	X																		
CCVL 480-271006/20	1		11:03	X																		
480-89453-2	5	P	11:06	X																		
480-89453-3	5	P	11:09	X																		
480-89453-4	5	P	11:13	X																		
480-89453-4 SD	25	P	11:16	X																		
480-89453-4 PDS	5	P	11:19	X																		
480-89453-4 MS	5	P	11:23	X																		
480-89453-4 MSD	5	P	11:26	X																		
CCV 480-271006/28	1		11:36	X																		
CCB 480-271006/29	1		11:39	X																		
CCVL 480-271006/30	1		11:42	X																		

Prep Types
P = TCLP

13-IN
ANALYSIS RUN LOG
METALS

Lab Name: TestAmerica Buffalo Job No.: 480-89453-1

SDG No.:

Instrument ID: LEEMAN2 Method: 7470A

Start Date: 10/22/2015 15:26 End Date: 10/22/2015 17:20

Lab Sample ID	D/F	Type	Time	Analytes																		
				Hg																		
ICV 480-270525/1	1		15:26	X																		
ICB 480-270525/2	1		15:28	X																		
ICVL 480-270525/3	1		15:29	X																		
CCV 480-270525/4			15:31																			
CCB 480-270525/5			15:33																			
ZZZZZZ			15:34																			
ZZZZZZ			15:36																			
ZZZZZZ			15:38																			
ZZZZZZ			15:40																			
ZZZZZZ			15:41																			
ZZZZZZ			15:43																			
ZZZZZZ			15:45																			
ZZZZZZ			15:47																			
ZZZZZZ			15:48																			
ZZZZZZ			15:50																			
CCV 480-270525/16			15:52																			
CCB 480-270525/17			15:54																			
ZZZZZZ			15:55																			
ZZZZZZ			15:57																			
ZZZZZZ			15:59																			
ZZZZZZ			16:01																			
ZZZZZZ			16:03																			
ZZZZZZ			16:04																			
ZZZZZZ			16:06																			
ZZZZZZ			16:08																			
ZZZZZZ			16:09																			
ZZZZZZ			16:11																			
CCV 480-270525/28			16:14																			
CCB 480-270525/29			16:16																			
ZZZZZZ			16:17																			
ZZZZZZ			16:19																			
ZZZZZZ			16:21																			
ZZZZZZ			16:22																			
ZZZZZZ			16:24																			
ZZZZZZ			16:26																			
ZZZZZZ			16:28																			
ZZZZZZ			16:29																			
ZZZZZZ			16:32																			
ZZZZZZ			16:34																			
CCV 480-270525/40	1		16:36	X																		
CCB 480-270525/41	1		16:38	X																		
ZZZZZZ			16:39																			

13-IN
ANALYSIS RUN LOG
METALS

Lab Name: TestAmerica Buffalo Job No.: 480-89453-1

SDG No.:

Instrument ID: LEEMAN2 Method: 7470A

Start Date: 10/22/2015 15:26 End Date: 10/22/2015 17:20

Lab Sample ID	D/F	Type	Time	Analytes																		
				Hg																		
ZZZZZZ			16:41																			
ZZZZZZ			16:43																			
ZZZZZZ			16:45																			
ZZZZZZ			16:48																			
ZZZZZZ			16:50																			
ZZZZZZ			16:51																			
LB2 480-270052/1-E	1	P	16:53	X																		
MB 480-270385/2-A	1	T	16:56	X																		
LCS 480-270385/3-A	1	T	16:57	X																		
CCV 480-270525/52	1		16:59	X																		
CCB 480-270525/53	1		17:01	X																		
480-89453-1	1	P	17:02	X																		
480-89453-2	1	P	17:04	X																		
480-89453-3	1	P	17:05	X																		
480-89453-4	1	P	17:08	X																		
480-89453-4 SD	5	P	17:10	X																		
480-89453-4 MS	1	P	17:11	X																		
480-89453-4 MSD	1	P	17:14	X																		
ZZZZZZ			17:15																			
CCV 480-270525/62	1		17:17	X																		
CCB 480-270525/63	1		17:18	X																		
CCVL 480-270525/64	1		17:20	X																		

Prep Types
P = TCLP
T = Total/NA

13-IN
ANALYSIS RUN LOG
METALS

Lab Name: TestAmerica Buffalo Job No.: 480-89453-1

SDG No.:

Instrument ID: LEEMAN2 Method: 7471B

Start Date: 10/21/2015 16:34 End Date: 10/22/2015 07:38

Lab Sample ID	D/F	Type	Time	Analytes																		
				Hg																		
ICV 480-270289/1	1		16:34	X																		
ICB 480-270289/2	1		16:36	X																		
ICVL 480-270289/3	1		16:38	X																		
CCV 480-270289/4			16:39																			
CCB 480-270289/5			16:41																			
ZZZZZZ			16:42																			
ZZZZZZ			16:43																			
ZZZZZZ			16:45																			
ZZZZZZ			16:47																			
ZZZZZZ			16:48																			
ZZZZZZ			16:49																			
ZZZZZZ			16:51																			
ZZZZZZ			16:53																			
ZZZZZZ			16:54																			
ZZZZZZ			16:56																			
CCV 480-270289/16	1		16:58	X																		
CCB 480-270289/17	1		16:59	X																		
ZZZZZZ			17:01																			
ZZZZZZ			17:02																			
ZZZZZZ			17:03																			
ZZZZZZ			17:05																			
ZZZZZZ			17:07																			
ZZZZZZ			17:08																			
ZZZZZZ			17:09																			
ZZZZZZ			17:11																			
ZZZZZZ			17:13																			
MB 480-270135/1-A	1	T	17:14	X																		
CCV 480-270289/28	1		17:16	X																		
CCB 480-270289/29	1		17:17	X																		
LCSSRM 480-270135/2-A	1	T	17:18	X																		
480-89453-1	1	T	17:20	X																		
480-89453-1 SD	5	T	17:21	X																		
480-89453-1 MS	1	T	17:23	X																		
480-89453-1 MSD	1	T	17:25	X																		
480-89453-2	1	T	17:26	X																		
480-89453-3	1	T	17:29	X																		
480-89453-4	1	T	17:30	X																		
CCV 480-270289/38	1		17:32	X																		
CCB 480-270289/39	1		17:34	X																		
CCVL 480-270289/40	1		17:35	X																		
CCV 480-270289/41			07:27																			
CCB 480-270289/42			07:29																			

13-IN
ANALYSIS RUN LOG
METALS

Lab Name: TestAmerica Buffalo Job No.: 480-89453-1

SDG No.:

Instrument ID: LEEMAN2 Method: 7471B

Start Date: 10/21/2015 16:34 End Date: 10/22/2015 07:38

Lab Sample ID	D/F	Type	Time	Analytes																		
				Hg																		
ZZZZZZ			07:30																			
CCV 480-270289/44			07:34																			
CCB 480-270289/45			07:37																			
CCVL 480-270289/46			07:38																			

Prep Types
T = Total/NA

13-IN
ANALYSIS RUN LOG
METALS

Lab Name: TestAmerica Pittsburgh Job No.: 480-89453-1

SDG No.:

Instrument ID: X Method: 6020A

Start Date: 11/09/2015 14:45 End Date: 11/10/2015 12:42

Lab Sample ID	D/F	Type	Time	Analytes																			
				Ag	As	Ba	Cd	Cr	Pb	Se													
ITUNE 180-159963/1			14:45																				
STD1 180-159963/2 IC	1		16:23	X	X	X	X	X	X	X													
STD2 180-159963/3 IC	1		16:29	X	X	X	X	X	X	X													
STD3 180-159963/4 IC	1		16:34	X	X	X	X	X	X	X													
ICV 180-159963/5	1		16:39	X	X	X	X	X	X	X													
ICB 180-159963/6	1		16:48	X	X	X	X	X	X	X													
CRI 180-159963/7	1		16:53	X	X	X	X	X	X	X													
ICSA 180-159963/8	1		16:58	X	X	X	X	X	X	X													
ICSAB 180-159963/9	1		17:04	X	X	X	X	X	X	X													
CCV 180-159963/10	1		17:09	X	X	X	X	X	X	X													
CCB1 180-159963/11	1		17:17	X	X	X	X	X	X	X													
ZZZZZZ			17:22																				
ZZZZZZ			17:27																				
ZZZZZZ			17:32																				
ZZZZZZ			17:37																				
ZZZZZZ			17:42																				
ZZZZZZ			17:47																				
ZZZZZZ			17:52																				
ZZZZZZ			17:57																				
ZZZZZZ			18:03																				
ZZZZZZ			18:08																				
CCV 180-159963/22	1		18:13	X	X	X	X	X	X	X													
CCB2 180-159963/23	1		18:22	X	X	X	X	X	X	X													
ZZZZZZ			18:27																				
ZZZZZZ			18:32																				
ZZZZZZ			18:37																				
MB 180-159790/1-A	1	T	18:46	X	X	X	X	X	X	X													
LCS 180-159790/2-A	1	T	18:51	X	X	X	X	X	X	X													
LCSD 180-159790/3-A	1	T	18:56	X	X	X	X	X	X	X													
ZZZZZZ			19:05																				
ZZZZZZ			19:11																				
ZZZZZZ			19:16																				
ZZZZZZ			19:21																				
CCV 180-159963/34	1		19:26	X	X	X	X	X	X	X													
CCB3 180-159963/35	1		19:35	X	X	X	X	X	X	X													
ZZZZZZ			19:40																				
ZZZZZZ			19:45																				
ZZZZZZ			19:50																				
ZZZZZZ			19:56																				
480-89453-1	5	T	20:01	X	X	X	X	X	X	X													
480-89453-2	5	T	20:06	X	X	X	X	X	X	X													
480-89453-3	5	T	20:11	X	X	X	X	X	X	X													

13-IN
ANALYSIS RUN LOG
METALS

Lab Name: TestAmerica Pittsburgh Job No.: 480-89453-1

SDG No.:

Instrument ID: X Method: 6020A

Start Date: 11/09/2015 14:45 End Date: 11/10/2015 12:42

Lab Sample ID	D/F	Type	Time	Analytes																		
				Ag	As	Ba	Cd	Cr	Pb	Se												
480-89453-4	5	T	20:16	X	X	X	X	X	X	X												
ZZZZZZ			20:25																			
ZZZZZZ			20:30																			
CCV 180-159963/46	1		20:35	X	X	X	X	X	X	X												
CCB4 180-159963/47	1		20:44	X	X	X	X	X	X	X												
ZZZZZZ			20:49																			
ZZZZZZ			20:54																			
ZZZZZZ			20:59																			
ZZZZZZ			21:05																			
ZZZZZZ			21:10																			
ZZZZZZ			21:15																			
ZZZZZZ			21:24																			
ZZZZZZ			21:29																			
ZZZZZZ			21:34																			
ZZZZZZ			21:39																			
CCV 180-159963/58			21:44																			
CCB5 180-159963/59			21:53																			
ZZZZZZ			21:58																			
ZZZZZZ			22:03																			
ZZZZZZ			22:08																			
ZZZZZZ			22:13																			
ZZZZZZ			22:19																			
ZZZZZZ			22:24																			
ZZZZZZ			22:29																			
ZZZZZZ			22:34																			
ZZZZZZ			22:39																			
ZZZZZZ			22:44																			
CCV 180-159963/70			22:53																			
CCB6 180-159963/71			23:02																			
ZZZZZZ			23:07																			
ZZZZZZ			23:12																			
ZZZZZZ			23:17																			
ZZZZZZ			23:22																			
ZZZZZZ			23:28																			
ZZZZZZ			23:33																			
ZZZZZZ			23:38																			
ZZZZZZ			23:43																			
ZZZZZZ			23:48																			
ZZZZZZ			23:53																			
CCV 180-159963/82			23:58																			
CCB7 180-159963/83			00:07																			
CRI 180-159963/84	1		00:18	X	X	X	X	X	X	X												

13-IN
ANALYSIS RUN LOG
METALS

Lab Name: TestAmerica Pittsburgh Job No.: 480-89453-1

SDG No.:

Instrument ID: X Method: 6020A

Start Date: 11/09/2015 14:45 End Date: 11/10/2015 12:42

Lab Sample ID	D/F	Type	Time	Analytes																		
				Ag	As	Ba	Cd	Cr	Pb	Se												
ZZZZZZ			00:23																			
ZZZZZZ			00:28																			
ZZZZZZ			00:33																			
ZZZZZZ			00:38																			
ZZZZZZ			00:43																			
ZZZZZZ			00:48																			
ZZZZZZ			00:53																			
ZZZZZZ			00:58																			
CCV 180-159963/93			01:03																			
CCB8 180-159963/94			01:13																			
ZZZZZZ			01:18																			
ZZZZZZ			01:23																			
ZZZZZZ			01:28																			
ZZZZZZ			01:33																			
ZZZZZZ			01:38																			
CCV 180-159963/100			01:43																			
CCB9 180-159963/101			01:52																			
ZZZZZZ			12:01																			
ZZZZZZ			12:05																			
ZZZZZZ			12:27																			
ZZZZZZ			12:32																			
CCV 180-159963/106			12:37																			
CCB 180-159963/107			12:42																			

Prep Types
T = Total/NA

15-IN
ICP-MS INTERNAL STANDARDS RELATIVE INTENSITY SUMMARY
METALS

Lab Name: TestAmerica Pittsburgh Job No.: 480-89453-1

SDG No.:

ICP-MS Instrument ID: X Start Date: 11/09/2015 End Date: 11/10/2015

Lab Sample ID	Time	Internal Standards %RI For:									
		Element Li-6	Q	Element Sc	Q	Element Y-89	Q	Element Rh-103	Q	Element In	Q
STD1 180-159963/2 I	16:23	100		100		100		100		100	
STD2 180-159963/3 I	16:29	92		97		106		98		98	
STD3 180-159963/4 I	16:34	107		107		109		107		107	
ICV 180-159963/5	16:39	104		104		111		103		104	
ICB 180-159963/6	16:48	108		110		117		112		111	
CRI 180-159963/7	16:53	105		108		110		110		109	
ICSA 180-159963/8	16:58	79		90		105		91		95	
ICSAB 180-159963/9	17:04	77		90		105		92		95	
CCV 180-159963/10	17:09	90		97		113		102		104	
CCB1 180-159963/11	17:17	98		105		118		111		111	
CCV 180-159963/22	18:13	83		92		110		101		101	
CCB2 180-159963/23	18:22	89		100		113		107		106	
MB 180-159790/1-A	18:46	66		79		97		91		92	
LCS 180-159790/2-A	18:51	69		79		102		87		89	
LCSD 180-159790/3-A	18:56	71		80		101		86		89	
CCV 180-159963/34	19:26	85		95		109		97		98	
CCB3 180-159963/35	19:35	86		101		113		105		103	
480-89453-1	20:01	52		69		101		76		81	
480-89453-2	20:06	55		73		105		82		86	
480-89453-3	20:11	55		76		107		80		84	
480-89453-4	20:16	54		73		98		78		80	
CCV 180-159963/46	20:35	78		87		101		90		91	
CCB4 180-159963/47	20:44	88		96		107		100		99	
CRI 180-159963/84	00:18	59		71		80		75		76	

FORM XV - IN

15-IN
ICP-MS INTERNAL STANDARDS RELATIVE INTENSITY SUMMARY
METALS

Lab Name: TestAmerica Pittsburgh Job No.: 480-89453-1

SDG No.:

ICP-MS Instrument ID: X Start Date: 11/09/2015 End Date: 11/10/2015

Lab Sample ID	Time	Internal Standards %RI For:									
		Element Tb	Q	Element Ho	Q	Element Bi	Q	Element	Q	Element	Q
STD1 180-159963/2 I	16:23	100		100		100					
STD2 180-159963/3 I	16:29	102		102		96					
STD3 180-159963/4 I	16:34	107		107		105					
ICV 180-159963/5	16:39	107		106		100					
ICB 180-159963/6	16:48	112		111		109					
CRI 180-159963/7	16:53	109		108		106					
ICSA 180-159963/8	16:58	101		102		94					
ICSAB 180-159963/9	17:04	103		104		95					
CCV 180-159963/10	17:09	108		107		100					
CCB1 180-159963/11	17:17	112		111		109					
CCV 180-159963/22	18:13	107		107		100					
CCB2 180-159963/23	18:22	108		108		107					
MB 180-159790/1-A	18:46	97		97		98					
LCS 180-159790/2-A	18:51	98		99		90					
LCSD 180-159790/3-A	18:56	98		98		89					
CCV 180-159963/34	19:26	105		104		96					
CCB3 180-159963/35	19:35	108		107		107					
480-89453-1	20:01	91		92		85					
480-89453-2	20:06	95		96		88					
480-89453-3	20:11	94		94		87					
480-89453-4	20:16	91		92		83					
CCV 180-159963/46	20:35	99		99		92					
CCB4 180-159963/47	20:44	104		104		103					
CRI 180-159963/84	00:18	81		82		83					

FORM XV - IN

METALS BATCH WORKSHEET

Lab Name: TestAmerica Buffalo Job No.: 480-89453-1

SDG No.:

Batch Number: 270052 Batch Start Date: 10/21/15 09:40 Batch Analyst: Salverson, Jessica L

Batch Method: 1311 Batch End Date:

Lab Sample ID	Client Sample ID	Method Chain	Basis	InitialAmount	FinalAmount	EFD_PartSizeRed	EFD_SampleWeight	EFD_VolumeWaterAdd	EFD_InitialpH
LB2 480-270052/1		1311, 3010A, 6010C			2000 mL				
480-89453-A-1	A-01-020415-1600	1311, 3010A, 6010C	P	50.03 g	1000.6 mL	No	5.03 g	96.5 mL	12.66 SU
480-89453-A-2	A-01-031915-1600	1311, 3010A, 6010C	P	50.13 g	1002.6 mL	No	5.08 g	96.5 mL	12.63 SU
480-89453-A-3	A-01-040215-1505	1311, 3010A, 6010C	P	50.11 g	1002.2 mL	No	5.03 g	96.5 mL	12.62 SU
480-89453-A-4	A-01-050815-1600	1311, 3010A, 6010C	P	40.03 g	800.6 mL	No	5.14 g	96.5 mL	12.58 SU

Lab Sample ID	Client Sample ID	Method Chain	Basis	EFD_AddHClpH>5	EFD_HeatHeld	EFD_SecondpHCheck	ExtractionFluidOne	ExtractionFluidTwo	PartSizeRed
LB2 480-270052/1		1311, 3010A, 6010C					No	Yes	
480-89453-A-1	A-01-020415-1600	1311, 3010A, 6010C	P	3.5 mL	Yes	12.26 SU	No	Yes	No mm
480-89453-A-2	A-01-031915-1600	1311, 3010A, 6010C	P	3.5 mL	Yes	12.13 SU	No	Yes	No mm
480-89453-A-3	A-01-040215-1505	1311, 3010A, 6010C	P	3.5 mL	Yes	12.39 SU	No	Yes	No mm
480-89453-A-4	A-01-050815-1600	1311, 3010A, 6010C	P	3.5 mL	Yes	12.33 SU	No	Yes	No mm

Lab Sample ID	Client Sample ID	Method Chain	Basis	VesselNumber	FiltCompDate	FiltCompTime	LeachatepH	LeachVolume	TCLP%Solids
LB2 480-270052/1		1311, 3010A, 6010C		Plastic	10/22/15	9:00	2.81 SU	900 mL	
480-89453-A-1	A-01-020415-1600	1311, 3010A, 6010C	P	Plastic	10/22/15	9:00	12.33 SU	550 mL	100 %
480-89453-A-2	A-01-031915-1600	1311, 3010A, 6010C	P	Plastic	10/22/15	9:00	12.53 SU	500 mL	100 %
480-89453-A-3	A-01-040215-1505	1311, 3010A, 6010C	P	Plastic	10/22/15	9:00	12.58 SU	600 mL	100 %
480-89453-A-4	A-01-050815-1600	1311, 3010A, 6010C	P	Plastic	10/22/15	9:00	12.58 SU	500 mL	100 %

Lab Sample ID	Client Sample ID	Method Chain	Basis	ExtractFluid					
LB2 480-270052/1		1311, 3010A, 6010C		2					

The pound sign (#) in the amount added field denotes that the reagent was used undiluted. All calculations are performed using the stated concentration for this reagent.

METALS BATCH WORKSHEET

Lab Name: TestAmerica Buffalo Job No.: 480-89453-1

SDG No.:

Batch Number: 270052 Batch Start Date: 10/21/15 09:40 Batch Analyst: Salverson, Jessica L

Batch Method: 1311 Batch End Date:

Lab Sample ID	Client Sample ID	Method Chain	Basis	ExtractFluid					
480-89453-A-1	A-01-020415-1600	1311, 3010A, 6010C	P	2					
480-89453-A-2	A-01-031915-1600	1311, 3010A, 6010C	P	2					
480-89453-A-3	A-01-040215-1505	1311, 3010A, 6010C	P	2					
480-89453-A-4	A-01-050815-1600	1311, 3010A, 6010C	P	2					

Batch Notes	
1N HCl Lot #	2761430
Balance ID	B037067151
Bottle Lot Number	0229001X
pH Buffer 1 ID	2920232 (2)
pH Buffer 2 ID	2920231 (4)
pH Buffer 3 ID	2942709 (7); Second Source 3012185 (7.05)
pH Buffer 4 ID	2920230 (10)
First End time	07:50
Filter Lot #	400105-5279
pH Meter Calibration Slope	94.1%
Room Temperature Thermometer ID	122273689
First Start time	15:50
TCLP Fluid 2 ID	3012619;3038066
TCLPFluid 2 pH	2.93;2.93
Maximum Temperature	21.60 Degrees C
Minimum Temperature	21.50 Degrees C
ID number of the thermometer	122273689
Tumbler Rotations per Minute	28 RPM JS 10/21/15 Tumbler #1, Tumbler #2
Uncorrected Maximum Temperature	21.70 Degrees C
Uncorrected Minimum Temperature	21.60 Degrees C

The pound sign (#) in the amount added field denotes that the reagent was used undiluted. All calculations are performed using the stated concentration for this reagent.

METALS BATCH WORKSHEET

Lab Name: TestAmerica Buffalo Job No.: 480-89453-1

SDG No.:

Batch Number: 270052 Batch Start Date: 10/21/15 09:40 Batch Analyst: Salverson, Jessica L

Batch Method: 1311 Batch End Date:

Basis	Basis Description
P	TCLP

The pound sign (#) in the amount added field denotes that the reagent was used undiluted. All calculations are performed using the stated concentration for this reagent.

METALS BATCH WORKSHEET

Lab Name: TestAmerica Buffalo Job No.: 480-89453-1

SDG No.:

Batch Number: 270374 Batch Start Date: 10/22/15 11:30 Batch Analyst: Javed, Khansa

Batch Method: 3010A Batch End Date:

Lab Sample ID	Client Sample ID	Method Chain	Basis	InitialAmount	FinalAmount	MED_TCLP 00013	MEH_HG_TCLP_W 00073		
LB2 480-270052/1-A		3010A, 6010C		50 mL	50 mL				
MB 480-270374/2		3010A, 6010C		50 mL	50 mL				
LCS 480-270374/3		3010A, 6010C		50 mL	50 mL	0.25 mL	0.25 mL		
480-89453-A-1-A	A-01-020415-1600	3010A, 6010C	P	50 mL	50 mL				
480-89453-A-2-A	A-01-031915-1600	3010A, 6010C	P	50 mL	50 mL				
480-89453-A-3-A	A-01-040215-1505	3010A, 6010C	P	50 mL	50 mL				
480-89453-A-4-A	A-01-050815-1600	3010A, 6010C	P	50 mL	50 mL				
480-89453-A-4-A MS	A-01-050815-1600	3010A, 6010C	P	50 mL	50 mL	0.25 mL	0.25 mL		
480-89453-A-4-A MSD	A-01-050815-1600	3010A, 6010C	P	50 mL	50 mL	0.25 mL	0.25 mL		

Batch Notes	
Batch Comment	Spiked and preserved at pH<2 Paper Lot #HC547770 @ 1103
First End time	1615
Filter Paper Lot Number	50630753 (push filters)
Lot # of hydrochloric acid	2956401
Lot # of Nitric Acid	0000113071
Hot Block ID number	D
Oven, Bath or Block Temperature 1	94.2 Degrees C
Oven, Bath or Block Temperature 2	93.0 Degrees C
pH Paper Lot Number	HC554612
Pipette ID	AN-7
First Start time	1130
ID number of the thermometer	150584583
Digestion Tube/Cup Lot #	1501179
Uncorrected Temperature	94.6 Degrees C
Uncorrected Temperature 2	93.4 Degrees C

The pound sign (#) in the amount added field denotes that the reagent was used undiluted. All calculations are performed using the stated concentration for this reagent.

METALS BATCH WORKSHEET

Lab Name: TestAmerica Buffalo Job No.: 480-89453-1

SDG No.:

Batch Number: 270374 Batch Start Date: 10/22/15 11:30 Batch Analyst: Javed, Khansa

Batch Method: 3010A Batch End Date:

Basis	Basis Description
P	TCLP

The pound sign (#) in the amount added field denotes that the reagent was used undiluted. All calculations are performed using the stated concentration for this reagent.

METALS BATCH WORKSHEET

Lab Name: TestAmerica Buffalo Job No.: 480-89453-1

SDG No.:

Batch Number: 270052 Batch Start Date: 10/21/15 09:40 Batch Analyst: Salverson, Jessica L

Batch Method: 1311 Batch End Date:

Lab Sample ID	Client Sample ID	Method Chain	Basis	InitialAmount	FinalAmount	EFD_PartSizeRed	EFD_SampleWeight	EFD_VolumeWaterAdd	EFD_InitialpH
LB2 480-270052/1		1311, 7470A, 7470A			2000 mL				
480-89453-A-1	A-01-020415-1600	1311, 7470A, 7470A	P	50.03 g	1000.6 mL	No	5.03 g	96.5 mL	12.66 SU
480-89453-A-2	A-01-031915-1600	1311, 7470A, 7470A	P	50.13 g	1002.6 mL	No	5.08 g	96.5 mL	12.63 SU
480-89453-A-3	A-01-040215-1505	1311, 7470A, 7470A	P	50.11 g	1002.2 mL	No	5.03 g	96.5 mL	12.62 SU
480-89453-A-4	A-01-050815-1600	1311, 7470A, 7470A	P	40.03 g	800.6 mL	No	5.14 g	96.5 mL	12.58 SU

Lab Sample ID	Client Sample ID	Method Chain	Basis	EFD_AddHClpH>5	EFD_HeatHeld	EFD_SecondpHCheck	ExtractionFluidOne	ExtractionFluidTwo	PartSizeRed
LB2 480-270052/1		1311, 7470A, 7470A					No	Yes	
480-89453-A-1	A-01-020415-1600	1311, 7470A, 7470A	P	3.5 mL	Yes	12.26 SU	No	Yes	No mm
480-89453-A-2	A-01-031915-1600	1311, 7470A, 7470A	P	3.5 mL	Yes	12.13 SU	No	Yes	No mm
480-89453-A-3	A-01-040215-1505	1311, 7470A, 7470A	P	3.5 mL	Yes	12.39 SU	No	Yes	No mm
480-89453-A-4	A-01-050815-1600	1311, 7470A, 7470A	P	3.5 mL	Yes	12.33 SU	No	Yes	No mm

Lab Sample ID	Client Sample ID	Method Chain	Basis	VesselNumber	FiltCompDate	FiltCompTime	LeachatepH	LeachVolume	TCLP%Solids
LB2 480-270052/1		1311, 7470A, 7470A		Plastic	10/22/15	9:00	2.81 SU	900 mL	
480-89453-A-1	A-01-020415-1600	1311, 7470A, 7470A	P	Plastic	10/22/15	9:00	12.33 SU	550 mL	100 %
480-89453-A-2	A-01-031915-1600	1311, 7470A, 7470A	P	Plastic	10/22/15	9:00	12.53 SU	500 mL	100 %
480-89453-A-3	A-01-040215-1505	1311, 7470A, 7470A	P	Plastic	10/22/15	9:00	12.58 SU	600 mL	100 %
480-89453-A-4	A-01-050815-1600	1311, 7470A, 7470A	P	Plastic	10/22/15	9:00	12.58 SU	500 mL	100 %

Lab Sample ID	Client Sample ID	Method Chain	Basis	ExtractFluid					
LB2 480-270052/1		1311, 7470A, 7470A		2					

The pound sign (#) in the amount added field denotes that the reagent was used undiluted. All calculations are performed using the stated concentration for this reagent.

METALS BATCH WORKSHEET

Lab Name: TestAmerica Buffalo Job No.: 480-89453-1

SDG No.:

Batch Number: 270052 Batch Start Date: 10/21/15 09:40 Batch Analyst: Salverson, Jessica L

Batch Method: 1311 Batch End Date:

Lab Sample ID	Client Sample ID	Method Chain	Basis	ExtractFluid					
480-89453-A-1	A-01-020415-1600	1311, 7470A, 7470A	P	2					
480-89453-A-2	A-01-031915-1600	1311, 7470A, 7470A	P	2					
480-89453-A-3	A-01-040215-1505	1311, 7470A, 7470A	P	2					
480-89453-A-4	A-01-050815-1600	1311, 7470A, 7470A	P	2					

Batch Notes	
1N HCl Lot #	2761430
Balance ID	B037067151
Bottle Lot Number	0229001X
pH Buffer 1 ID	2920232 (2)
pH Buffer 2 ID	2920231 (4)
pH Buffer 3 ID	2942709 (7); Second Source 3012185 (7.05)
pH Buffer 4 ID	2920230 (10)
First End time	07:50
Filter Lot #	400105-5279
pH Meter Calibration Slope	94.1%
Room Temperature Thermometer ID	122273689
First Start time	15:50
TCLP Fluid 2 ID	3012619;3038066
TCLPFluid 2 pH	2.93;2.93
Maximum Temperature	21.60 Degrees C
Minimum Temperature	21.50 Degrees C
ID number of the thermometer	122273689
Tumbler Rotations per Minute	28 RPM JS 10/21/15 Tumbler #1, Tumbler #2
Uncorrected Maximum Temperature	21.70 Degrees C
Uncorrected Minimum Temperature	21.60 Degrees C

The pound sign (#) in the amount added field denotes that the reagent was used undiluted. All calculations are performed using the stated concentration for this reagent.

METALS BATCH WORKSHEET

Lab Name: TestAmerica Buffalo Job No.: 480-89453-1

SDG No.:

Batch Number: 270052 Batch Start Date: 10/21/15 09:40 Batch Analyst: Salverson, Jessica L

Batch Method: 1311 Batch End Date:

Basis	Basis Description
P	TCLP

The pound sign (#) in the amount added field denotes that the reagent was used undiluted. All calculations are performed using the stated concentration for this reagent.

METALS BATCH WORKSHEET

Lab Name: TestAmerica Buffalo Job No.: 480-89453-1

SDG No.:

Batch Number: 270385 Batch Start Date: 10/22/15 12:15 Batch Analyst: Seger, Tiffany A

Batch Method: 7470A Batch End Date:

Lab Sample ID	Client Sample ID	Method Chain	Basis	InitialAmount	FinalAmount	MEH_HG_TCLP_W 00073			
LB2 480-270052/1-A		7470A, 7470A		30 mL	50 mL				
MB 480-270385/2		7470A, 7470A		30 mL	50 mL				
LCS 480-270385/3		7470A, 7470A		30 mL	50 mL	0.15 mL			
480-89453-A-1-A	A-01-020415-1600	7470A, 7470A	P	30 mL	50 mL				
480-89453-A-2-A	A-01-031915-1600	7470A, 7470A	P	30 mL	50 mL				
480-89453-A-3-A	A-01-040215-1505	7470A, 7470A	P	30 mL	50 mL				
480-89453-A-4-A	A-01-050815-1600	7470A, 7470A	P	30 mL	50 mL				
480-89453-A-4-A MS	A-01-050815-1600	7470A, 7470A	P	30 mL	50 mL	0.15 mL			
480-89453-A-4-A MSD	A-01-050815-1600	7470A, 7470A	P	30 mL	50 mL	0.15 mL			

Batch Notes	
Hydroxylamine Hydrochloride Lot	3032375
Batch Comment	Cal Batch: 270301
Digestion End Time	1415
Digestion Start Time	1215
Sulfuric Acid Lot Number	3014228
Lot # of Nitric Acid	3021848
Hot Block ID number	HG-A
Potassium Persulfate Lot Number	3011385
Potassium Permanganate Lot Number	3021103
Oven, Bath or Block Temperature 1	95.5 Celsius
Pipette ID	HGL-4 @ 1025 10/22/2015
Stannous Chloride Lot Number	3036153
ID number of the thermometer	S/N52942
Digestion Tube/Cup Lot #	1501179
Uncorrected Temperature	95.0 Celsius

The pound sign (#) in the amount added field denotes that the reagent was used undiluted. All calculations are performed using the stated concentration for this reagent.

METALS BATCH WORKSHEET

Lab Name: TestAmerica Buffalo Job No.: 480-89453-1

SDG No.:

Batch Number: 270385 Batch Start Date: 10/22/15 12:15 Batch Analyst: Seger, Tiffany A

Batch Method: 7470A Batch End Date:

Basis	Basis Description
P	TCLP

The pound sign (#) in the amount added field denotes that the reagent was used undiluted. All calculations are performed using the stated concentration for this reagent.

METALS BATCH WORKSHEET

Lab Name: TestAmerica Buffalo Job No.: 480-89453-1

SDG No.:

Batch Number: 270135 Batch Start Date: 10/21/15 15:00 Batch Analyst: Seger, Tiffany A

Batch Method: 7471B Batch End Date:

Lab Sample ID	Client Sample ID	Method Chain	Basis	InitialAmount	FinalAmount	MED_SRM_D085 00002	MEH_HG2_WKG 01023		
MB 480-270135/1		7471B, 7471B		+0.5937 g	50 mL				
LCSSRM 480-270135/2		7471B, 7471B		+0.0239 g	50 mL	+0.0239 g			
480-89453-A-1	A-01-020415-1600	7471B, 7471B	T	+0.5970 g	50 mL				
480-89453-A-1 MS	A-01-020415-1600	7471B, 7471B	T	+0.5942 g	50 mL		2 mL		
480-89453-A-1 MSD	A-01-020415-1600	7471B, 7471B	T	+0.5954 g	50 mL		2 mL		
480-89453-A-2	A-01-031915-1600	7471B, 7471B	T	+0.5845 g	50 mL				
480-89453-A-3	A-01-040215-1505	7471B, 7471B	T	+0.5921 g	50 mL				
480-89453-A-4	A-01-050815-1600	7471B, 7471B	T	+0.5874 g	50 mL				

Batch Notes	
Hydroxylamine Hydrochloride Lot	3032375
Balance ID	25850472
Batch Comment	Cal Batch: 270025
Blank Soil Lot Number	3033791
Digestion End Time	1530
Digestion Start Time	1500
Lot # of hydrochloric acid	3021075
Lot # of Nitric Acid	3021845
Hot Block ID number	HG-A
Potassium Permanganate Lot Number	3021103
Oven, Bath or Block Temperature 1	95.5 Celsius
Pipette ID	HGL-5
Stannous Chloride Lot Number	3011365
ID number of the thermometer	S/N52492
Digestion Tube/Cup Lot #	1501179
Uncorrected Temperature	95.0 Celsius

The pound sign (#) in the amount added field denotes that the reagent was used undiluted. All calculations are performed using the stated concentration for this reagent.

METALS BATCH WORKSHEET

Lab Name: TestAmerica Buffalo Job No.: 480-89453-1

SDG No.:

Batch Number: 270135 Batch Start Date: 10/21/15 15:00 Batch Analyst: Seger, Tiffany A

Batch Method: 7471B Batch End Date:

Basis	Basis Description
T	Total/NA

The pound sign (#) in the amount added field denotes that the reagent was used undiluted. All calculations are performed using the stated concentration for this reagent.

METALS BATCH WORKSHEET

Lab Name: TestAmerica Pittsburgh Job No.: 480-89453-1

SDG No.:

Batch Number: 159790 Batch Start Date: 11/09/15 12:50 Batch Analyst: Hartsock, Bobbi M

Batch Method: 3050B Batch End Date: 11/09/15 14:50

Lab Sample ID	Client Sample ID	Method Chain	Basis	CalcMsg	InitialAmount	FinalAmount	MTAPITTICPMS 00022	MTAPITTMSA 00027	MTAPITTMSC 00033
MB 180-159790/1		3050B, 6020A		CALC NOT SET TO RUN	00001.04 g	100 mL			
LCS 180-159790/2		3050B, 6020A		CALC NOT SET TO RUN	00001.02 g	100 mL	1 mL	1 mL	1 mL
LCSD 180-159790/3		3050B, 6020A		CALC NOT SET TO RUN	00001.04 g	100 mL	1 mL	1 mL	1 mL
480-89453-A-1	A-01-020415-1600	3050B, 6020A	T	CALC NOT SET TO RUN	00001.04 g	100 mL			
480-89453-A-2	A-01-031915-1600	3050B, 6020A	T	CALC NOT SET TO RUN	00001.05 g	100 mL			
480-89453-A-3	A-01-040215-1505	3050B, 6020A	T	CALC NOT SET TO RUN	00001.01 g	100 mL			
480-89453-A-4	A-01-050815-1600	3050B, 6020A	T	CALC NOT SET TO RUN	00001.04 g	100 mL			

Batch Notes	
Balance ID	P1856710
Batch Comment	Metals C3
Blank Soil Lot Number	1736518
First End time	1450
Filter Paper Lot Number	9664849
Hydrogen peroxide lot number	10ml 1776515
Lot # of hydrochloric acid	10ml 1779189
Logbook ID for diluted Nitric	10ml 1776088
Lot # of Nitric Acid	5ml 1734536
Hot Block ID number	HB11
Oven, Bath or Block Temperature 1	95C Degrees C
Pipette ID	L1201511U
Person's name who witnessed reagent drop	BMH
Perform Calculation (0=No, 1=Yes)	0
First Start time	1250
ID number of the thermometer	IP3-14-METALS CF0.0 C1
Digestion Tube/Cup Lot #	1504103
Uncorrected Temperature	95C Celsius

The pound sign (#) in the amount added field denotes that the reagent was used undiluted. All calculations are performed using the stated concentration for this reagent.

METALS BATCH WORKSHEET

Lab Name: TestAmerica Pittsburgh Job No.: 480-89453-1

SDG No.:

Batch Number: 159790 Batch Start Date: 11/09/15 12:50 Batch Analyst: Hartsock, Bobbi M

Batch Method: 3050B Batch End Date: 11/09/15 14:50

Basis	Basis Description
T	Total/NA

The pound sign (#) in the amount added field denotes that the reagent was used undiluted. All calculations are performed using the stated concentration for this reagent.

GENERAL CHEMISTRY

COVER PAGE
GENERAL CHEMISTRY

Lab Name: TestAmerica Pittsburgh Job Number: 480-89453-1

SDG No.:

Project: Cerl Gasifier - Research Project

Client Sample ID	Lab Sample ID
A-01-020415-1600	480-89453-1
A-01-031915-1600	480-89453-2
A-01-040215-1505	480-89453-3
A-01-050815-1600	480-89453-4

Comments:

9-IN
DETECTION LIMITS
GENERAL CHEMISTRY

Lab Name: TestAmerica Pittsburgh Job Number: 480-89453-1

SDG Number:

Matrix: Solid Instrument ID: NOEQUIP

Method: 2540G RL Date: 01/31/2010 13:27

Analyte	Wavelength/ Mass	RL (%)	
Percent Moisture		0.1	
Percent Solids		0.1	

FORM IX - IN

9-IN
CALIBRATION BLANK DETECTION LIMITS
GENERAL CHEMISTRY

Lab Name: TestAmerica Pittsburgh Job Number: 480-89453-1

SDG Number:

Matrix: Solid Instrument ID: NOEQUIP

Method: 2540G XRL Date: 01/31/2010 13:31

Analyte	Wavelength/ Mass	XRL (%)	
Percent Moisture		0.1	
Percent Solids		0.1	

FORM IX - IN

13-IN
ANALYSIS RUN LOG
GENERAL CHEMISTRY

Lab Name: TestAmerica Pittsburgh Job No.: 480-89453-1

SDG No.:

Instrument ID: NOEQUIP Method: 2540G

Start Date: 10/27/2015 08:35 End Date: 10/27/2015 08:35

Lab Sample ID	D/F	Type	Time	Analytes																		
				% Sol	Moist																	
ZZZZZZ			08:35																			
ZZZZZZ			08:35																			
ZZZZZZ			08:35																			
ZZZZZZ			08:35																			
ZZZZZZ			08:35																			
ZZZZZZ			08:35																			
ZZZZZZ			08:35																			
ZZZZZZ			08:35																			
480-89453-1	1	T	08:35	X	X																	
480-89453-2	1	T	08:35	X	X																	
480-89453-3	1	T	08:35	X	X																	
480-89453-4	1	T	08:35	X	X																	
ZZZZZZ			08:35																			
ZZZZZZ			08:35																			
ZZZZZZ			08:35																			
ZZZZZZ			08:35																			
ZZZZZZ			08:35																			
ZZZZZZ			08:35																			
ZZZZZZ			08:35																			
ZZZZZZ			08:35																			

Prep Types
T = Total/NA

GENERAL CHEMISTRY BATCH WORKSHEET

Lab Name: TestAmerica Pittsburgh Job No.: 480-89453-1

SDG No.:

Batch Number: 158347 Batch Start Date: 10/27/15 08:35 Batch Analyst: Loheyde, Cheryl

Batch Method: 2540G Batch End Date:

Lab Sample ID	Client Sample ID	Method Chain	Basis	DISH#	DishWeight	SampleMassWet	SampleMassDry		
480-89453-A-1	A-01-020415-1600	2540G	T	v3259 0.1188	2.56 g	5.87 g	5.52 g		
480-89453-A-2	A-01-031915-1600	2540G	T	Aw0br 0.1266	2.51 g	6.12 g	6.12 g		
480-89453-A-3	A-01-040215-1505	2540G	T	Aw014 0.1120	2.48 g	6.29 g	6.29 g		
480-89453-A-4	A-01-050815-1600	2540G	T	Aw018 0.1125	2.48 g	5.02 g	5.00 g		

Batch Notes	
Balance ID	1126472457 No Unit
Date and Time Samples in Desiccator	10/28/15 04:45
Date and Time Samples out of Desiccator	10/28/15 05:45
Date samples were placed in the oven	10/27/15
Oven Temp when samples are put in oven	104.5 Degrees C
Time samples were place in the oven	09:40
Date samples were removed from oven	10/28/15
Oven Temp when samples removed from oven	104.5 Degrees C
Time Samples were removed from oven	04:45
Oven ID	5005
ID number of the thermometer	WET 34
Uncorrected In Temperature	105 Celsius
Uncorrected Out Temperature	105 Celsius

Basis	Basis Description
T	Total/NA

The pound sign (#) in the amount added field denotes that the reagent was used undiluted. All calculations are performed using the stated concentration for this reagent.

Subcontract Data

Shipping and Receiving Documents

TestAmerica Buffalo
10 Hazelwood Drive
Amherst, NY 14228-2298
Phone (716) 691-2600 Fax (716) 691-7991

Chain of Custody Record

480-89453 Chain of Custody

TestAmerica
THE LEADER IN ENVIRONMENTAL TESTING

Client Information (Sub Contract Lab)	Sampler:	Lab PM: Fischer, Brian J	COC No: 480-26416.1
Client Contact: Shipping/Receiving	Phone:	E-Mail: brian.fischer@testa	Page: Page 1 of 1
Company: TestAmerica Laboratories, Inc.			Job #: 480-89453-1
Address: 301 Alpha Drive, RIDC Park,	Due Date Requested: 10/21/2015		
City: Pittsburgh	TAT Requested (days):		
State, Zip: PA, 15238			
Phone: 412-963-7058(Tel) 412-963-2468(Fax)	PO #:		
Email:	WO #:		
Project Name: Cerl Gasifier - Research Project	Project #: 48012846		
Site:	SSOW#:		

Analysis Requested

Preservation Codes:
A - HCL, B - NaOH, C - Zn Acetate, D - Nitric Acid, E - NaHSO4, F - MeOH, G - Amchlor, H - Ascorbic Acid, I - Ice, J - DI Water, K - EDTA, L - EDA, M - Hexane, N - None, O - AsNaO2, P - Na2O4S, Q - Na2SO3, R - Na2S2SO3, S - H2SO4, T - TSP Dodecahydrate, U - Acetone, V - MCAA, W - ph 4-5, Z - other (specify)
Other:

Sample Identification - Client ID (Lab ID)	Sample Date	Sample Time	Sample Type (C=comp, G=grab)	Matrix (W=water, S=solid, O=waste/oil, BT=Tissue, A=Air)	Field Filtered Sample (Yes or No)	Perform MS/MSD (Yes or No)	Moisture	6020A/3060B RCRA Metals by ICP/MS 6020A	Total Number of containers	Special Instructions/Note:
			Preservation Code:							
A-01-020415-1600 (480-89453-1)	2/4/15	16:00 Eastern		Solid			X	X		
A-01-031915-1600 (480-89453-2)	3/19/15	16:00 Eastern		Solid			X	X		
A-01-040215-1505 (480-89453-3)	4/2/15	15:05 Eastern		Solid			X	X		
A-01-050815-1600 (480-89453-4)	5/8/15	16:00 Eastern		Solid			X	X		

Possible Hazard Identification
Unconfirmed

Sample Disposal (A fee may be assessed if samples are retained longer than 1 month)
☐ *Return To Client* ☐ *Disposal By Lab* ☐ *Archive For* _____ *Months*

Deliverable Requested: I, II, III, IV, Other (specify)

Special Instructions/QC Requirements:

Empty Kit Relinquished by:	Date:		Time:		Method of Shipment:	
Relinquished by: C Walter	Date/Time: 10/21/15	1700	Company: TAB	Received by: D Nation	Date/Time: 10/22/15	Company: TAB
Relinquished by:	Date/Time:		Company	Received by:	Date/Time: 8:50	Company
Relinquished by:	Date/Time:		Company	Received by:	Date/Time:	Company
Custody Seals Intact: Δ Yes Δ No	Custody Seal No.:			Cooler Temperature(s) °C and Other Remarks:		

Login Sample Receipt Checklist

Client: U.S. Army Construction Engineering Resea

Job Number: 480-89453-1

Login Number: 89453
List Number: 1
Creator: Kinecki, Kenneth P

List Source: TestAmerica Buffalo

Question	Answer	Comment
Radioactivity either was not measured or, if measured, is at or below background	True	
The cooler's custody seal, if present, is intact.	True	
The cooler or samples do not appear to have been compromised or tampered with.	True	
Samples were received on ice.	False	
Cooler Temperature is acceptable.	False	
Cooler Temperature is recorded.	True	
COC is present.	False	Filled out by TA Buffalo
COC is filled out in ink and legible.	True	
COC is filled out with all pertinent information.	True	
Is the Field Sampler's name present on COC?	False	
There are no discrepancies between the sample IDs on the containers and the COC.	True	
Samples are received within Holding Time.	False	
Sample containers have legible labels.	True	
Containers are not broken or leaking.	True	
Sample collection date/times are provided.	True	Imbedded in the sample ID's
Appropriate sample containers are used.	False	Canning Jars
Sample bottles are completely filled.	False	
Sample Preservation Verified	True	
There is sufficient vol. for all requested analyses, incl. any requested MS/MSDs	False	Samople -04 contains 59 grams
VOA sample vials do not have headspace or bubble is <6mm (1/4") in diameter.	True	
If necessary, staff have been informed of any short hold time or quick TAT needs	True	
Multiphasic samples are not present.	True	
Samples do not require splitting or compositing.	True	
Sampling Company provided.	True	USACE
Samples received within 48 hours of sampling.	True	
Samples requiring field filtration have been filtered in the field.	N/A	
Chlorine Residual checked.	N/A	

Login Sample Receipt Checklist

Client: U.S. Army Construction Engineering Resea

Job Number: 480-89453-1

Login Number: 89453
List Number: 2
Creator: Watson, Debbie

List Source: TestAmerica Pittsburgh
List Creation: 10/22/15 03:02 PM

Question	Answer	Comment
Radioactivity wasn't checked or is </= background as measured by a survey meter.	True	
The cooler's custody seal, if present, is intact.	True	
Sample custody seals, if present, are intact.	True	
The cooler or samples do not appear to have been compromised or tampered with.	True	
Samples were received on ice.	True	
Cooler Temperature is acceptable.	True	
Cooler Temperature is recorded.	True	
COC is present.	True	
COC is filled out in ink and legible.	True	
COC is filled out with all pertinent information.	True	
Is the Field Sampler's name present on COC?	True	
There are no discrepancies between the containers received and the COC.	True	
Samples are received within Holding Time.	True	
Sample containers have legible labels.	True	
Containers are not broken or leaking.	True	
Sample collection date/times are provided.	True	
Appropriate sample containers are used.	True	
Sample bottles are completely filled.	True	
Sample Preservation Verified.	True	
There is sufficient vol. for all requested analyses, incl. any requested MS/MSDs	True	
Containers requiring zero headspace have no headspace or bubble is <6mm (1/4").	True	
Multiphasic samples are not present.	True	
Samples do not require splitting or compositing.	True	
Residual Chlorine Checked.	N/A	

Appendix G : Analyses of Condensate and Pyro Oil

TestAmerica
THE LEADER IN ENVIRONMENTAL TESTING

ANALYTICAL REPORT

Job Number: 480-89467-1

Job Description: Cerl Gasifier - Research Project

For:
U.S. Army Construction Engineering Resea
2902 Newmark Drive
Champaign, IL 61822

Attention: Mr. Stephen Cosper

Approved for release.
Joe V Giacomazza
Project Management Assistant II
11/13/2015 5:04 PM

Designee for
Brian J Fischer, Manager of Project Management
10 Hazelwood Drive, Amherst, NY, 14228-2298
(716)504-9835
brian.fischer@testamericainc.com
11/13/2015

The test results in this report meet all NELAP requirements for analytes for which accreditation is required or available. Any exceptions to the NELAP requirements are noted in this report. Pursuant to NELAP, this report may not be reproduced, except in full, without the written approval of the laboratory. All questions regarding this test report should be directed to the TestAmerica Project Manager who has signed this report.

TestAmerica Buffalo NELAC Certifications: CADPH 01169CA, FLDOH E87672, ILEPA 200003, KSDOH E-10187, LADEQ 30708, MDH 036-999-337, NHELAP 2973, NJDEP NY455, NHDOH 10026, ORELAP NY200003, PADEP 68-00281, TXCEQ T-104704412-10-1

TestAmerica Laboratories, Inc.
TestAmerica Buffalo 10 Hazelwood Drive, Amherst, NY 14228-2298
Tel (716) 691-2600 Fax (716) 691-7991 www.testamericainc.com

Table of Contents

Cover Title Page 1

Data Summaries 4

- Report Narrative 4
- Manual Integration Summary 5
- Sample Summary 16
- Executive Summary 17
- Method Summary 21
- Method / Analyst Summary 22
- Sample Datasheets 23
- Surrogate Summary 50
- QC Data Summary 53
- Data Qualifiers 59
- QC Association Summary 60
- Lab Chronicle 62
- Reagent Traceability 67
- Certification Summary 158

Organic Sample Data 159

- GC/MS Semi VOA 159
  - Method 8270D 159
    - Method 8270D QC Summary 160
    - Method 8270D Sample Data 185
    - Standards Data 202
      - Method 8270D ICAL Data 202
      - Method 8270D Resolution Data 222
      - Method 8270D CCAL Data 226
    - Raw QC Data 238

Table of Contents

Method 8270D Blank Data 238

Method 8270D LCS/LCSD Data 240

Method 8270D Run Logs 243

Method 8270D Prep Data 249

GC VOA 252

Method 8021B 252

Method 8021B QC Summary 253

Method 8021B Sample Data 267

Standards Data 277

Method 8021B ICAL Data 277

Method 8021B CCAL Data 291

Raw QC Data 315

Method 8021B Blank Data 315

Method 8021B LCS/LCSD Data 316

Method 8021B Run Logs 318

Shipping and Receiving Documents 321

Client Chain of Custody 322

Sample Receipt Checklist 326

Job Narrative
480-89467-1

Receipt
The samples were received on 10/20/2015 9:20 AM; the samples arrived in good condition, properly preserved and, where required, on ice. The temperature of the cooler at receipt was 20.0º C.

Receipt Exceptions
Samples for 8021 analyses were pre-diluted in sample control by a DF of 40.

Samples for 8270 analyses were pre-diluted in sample control by a DF of 100.

GC/MS VOA
No analytical or quality issues were noted, other than those described in the Definitions/Glossary page.

GC/MS Semi VOA
Method(s) 8270D: The following samples required a dilution due to the nature of the sample matrix: OS-01-042815-1600 (480-89467-16) and OS-01-101514-0910 (480-89467-22). Because of this dilution, the surrogate spike concentration in the sample was reduced to a level where the recovery calculation does not provide useful information.

Method(s) 8270D: The following samples were diluted due to viscosity: OS-01-031815-1530 (480-89467-14), OS-01-042415-1600 (480-89467-15), OS-01-042815-1600 (480-89467-16), OS-01-050715-1630 (480-89467-17) and OS-01-101514-0910 (480-89467-22). Elevated reporting limits (RL) are provided.

Method(s) 8270D: The following samples were diluted due to the nature of the sample matrix: WW-02-030515-1557 (480-89467-2), WW-01-030515-1352 (480-89467-5), WW-01-042815-1600 (480-89467-6), WW-01-050715-1600 (480-89467-8), P-01-030515-1557 (480-89467-10), P-01-051315-1530 (480-89467-13), P-01-101514-0910 (480-89467-18), P-01-100814-1120 (480-89467-19) and P-01-013015-0915 (480-89467-20). As such, surrogate recoveries are below the calibration range or are not reported, and elevated reporting limits (RLs) are provided.

Method(s) 8270D: The following samples were diluted due to the abundance of target analytes: WW-01-042815-1600 (480-89467-6), WW-01-050715-1600 (480-89467-8) and P-01-013015-0915 (480-89467-20). As such, surrogate recoveries are below the calibration range or are not reported, and elevated reporting limits (RLs) are provided.

No additional analytical or quality issues were noted, other than those described above or in the Definitions/Glossary page.

GC VOA
Method(s) 8021B: The following samples were analyzed outside of analytical holding time due to analysis request date outside of holding time. WW-01-101514-1120 (480-89467-1), WW-01-031915-1550 (480-89467-3), WW-01-041415-1640 (480-89467-4), WW-01-050615-1552 (480-89467-7), WW-01-052015-1500 (480-89467-9), P-01-031315-1531 (480-89467-11), P-01-050615-1552 (480-89467-12), P-01-040115-1600 (480-89467-21), P-01-012215-0948 (480-89467-23) and WW-01-031315-1531 (480-89467-24).

Method(s) 8021B: The following samples were diluted to bring the concentration of target analytes within the calibration range: WW-01-101514-1120 (480-89467-1), WW-01-031915-1550 (480-89467-3), WW-01-041415-1640 (480-89467-4), WW-01-050615-1552 (480-89467-7), WW-01-052015-1500 (480-89467-9), P-01-031315-1531 (480-89467-11), P-01-050615-1552 (480-89467-12), P-01-040115-1600 (480-89467-21), P-01-012215-0948 (480-89467-23) and WW-01-031315-1531 (480-89467-24). Elevated reporting limits (RLs) are provided.

Method(s) 8021B: The recovery of the one surrogate in samples WW-01-031315-1531 (480-89467-24) exceeds quality control limits due to the sample matrix. The recovery of the secondary surrogate is within quality control criteria; no corrective action is required.

No additional analytical or quality issues were noted, other than those described above or in the Definitions/Glossary page.

Organic Prep
Method(s) 3510C: The following samples was prepared outside of preparation holding time: WW-02-030515-1557 (480-89467-2), WW-01-030515-1352 (480-89467-5), WW-01-042815-1600 (480-89467-6), WW-01-050715-1600 (480-89467-8), P-01-030515-1557 (480-89467-10), P-01-051315-1530 (480-89467-13), P-01-101514-0910 (480-89467-18), P-01-100814-1120 (480-89467-19) and P-01-013015-0915 (480-89467-20).

Method(s) 3580A: The following samples were prepared outside of preparation holding time due to test added after holding time expired: OS-01-031815-1530 (480-89467-14), OS-01-042415-1600 (480-89467-15), OS-01-042815-1600 (480-89467-16), OS-01-050715-1630 (480-89467-17) and OS-01-101514-0910 (480-89467-22).

No additional analytical or quality issues were noted, other than those described above or in the Definitions/Glossary page.

GC/MS SEMI VOA MANUAL INTEGRATION SUMMARY

Lab Name: TestAmerica Buffalo Job No.:

SDG No.:

Instrument ID: HP5973V Analysis Batch Number: 271208

Lab Sample ID: IC 480-271208/3 Client Sample ID:

Date Analyzed: 10/26/15 19:36 Lab File ID: V53780.D GC Column: RXI-5Sil MS ID: 0.25(mm)

COMPOUND NAME	RETENTION TIME	MANUAL INTEGRATION		
		REASON	ANALYST	DATE
Benzoic acid	7.65	Assign Peak	richardsd	10/27/15 10:23
Indeno[1,2,3-cd]pyrene	18.23	Incomplete Integration	richardsd	10/27/15 10:23

Lab Sample ID: ICIS 480-271208/6 Client Sample ID:

Date Analyzed: 10/26/15 21:04 Lab File ID: V53783.D GC Column: RXI-5Sil MS ID: 0.25(mm)

COMPOUND NAME	RETENTION TIME	MANUAL INTEGRATION		
		REASON	ANALYST	DATE
Caprolactam	8.30	Incomplete Integration	richardsd	10/27/15 10:26

Lab Sample ID: IC 480-271208/7 Client Sample ID:

Date Analyzed: 10/26/15 21:33 Lab File ID: V53784.D GC Column: RXI-5Sil MS ID: 0.25(mm)

COMPOUND NAME	RETENTION TIME	MANUAL INTEGRATION		
		REASON	ANALYST	DATE
Caprolactam	8.32	Incomplete Integration	richardsd	10/27/15 10:28

Lab Sample ID: IC 480-271208/8 Client Sample ID:

Date Analyzed: 10/26/15 22:02 Lab File ID: V53785.D GC Column: RXI-5Sil MS ID: 0.25(mm)

COMPOUND NAME	RETENTION TIME	MANUAL INTEGRATION		
		REASON	ANALYST	DATE
Caprolactam	8.32	Incomplete Integration	richardsd	10/27/15 10:28

Lab Sample ID: IC 480-271208/9 Client Sample ID:

Date Analyzed: 10/26/15 22:31 Lab File ID: V53786.D GC Column: RXI-5Sil MS ID: 0.25(mm)

COMPOUND NAME	RETENTION TIME	MANUAL INTEGRATION		
		REASON	ANALYST	DATE
Caprolactam	8.33	Incomplete Integration	richardsd	10/27/15 10:28

GC/MS SEMI VOA MANUAL INTEGRATION SUMMARY

Lab Name: TestAmerica Buffalo Job No.: 480-89467-1

SDG No.:

Instrument ID: HP5973V Analysis Batch Number: 273999

Lab Sample ID: CCVIS 480-273999/3 Client Sample ID:

Date Analyzed: 11/10/15 11:07 Lab File ID: V60002.D GC Column: RXI-5Sil MS ID: 0.25(mm)

COMPOUND NAME	RETENTION TIME	MANUAL INTEGRATION		
		REASON	ANALYST	DATE
4-Chloroaniline	7.96	Peak Tail	richardsd	11/10/15 12:44
Pentachlorophenol	10.52	Peak Tail	richardsd	11/10/15 12:44

GC/MS SEMI VOA MANUAL INTEGRATION SUMMARY

Lab Name: TestAmerica Buffalo Job No.: 480-89467-1

SDG No.:

Instrument ID: HP5973V Analysis Batch Number: 274392

Lab Sample ID: CCVIS 480-274392/3 Client Sample ID:

Date Analyzed: 11/11/15 12:49 Lab File ID: V60044.D GC Column: RXI-5Sil MS ID: 0.25(mm)

COMPOUND NAME	RETENTION TIME	MANUAL INTEGRATION		
		REASON	ANALYST	DATE
4-Chloroaniline	7.95	Baseline	richardsd	11/11/15 14:14
Pentachlorophenol	10.51	Peak Tail	richardsd	11/11/15 14:14

GC/MS SEMI VOA MANUAL INTEGRATION SUMMARY

Lab Name: TestAmerica Buffalo Job No.:

SDG No.:

Instrument ID: HP5973X Analysis Batch Number: 270613

Lab Sample ID: IC 480-270613/3 Client Sample ID:

Date Analyzed: 10/23/15 08:33 Lab File ID: X009013899.D GC Column: RXI-5Sil MS ID: 0.25(mm)

COMPOUND NAME	RETENTION TIME	MANUAL INTEGRATION		
		REASON	ANALYST	DATE
Benzoic acid	7.88	Assign Peak	WolfL	10/26/15 16:12

Lab Sample ID: IC 480-270613/4 Client Sample ID:

Date Analyzed: 10/23/15 09:00 Lab File ID: X009013900.D GC Column: RXI-5Sil MS ID: 0.25(mm)

COMPOUND NAME	RETENTION TIME	MANUAL INTEGRATION		
		REASON	ANALYST	DATE
Benzoic acid	7.90	Assign Peak	WolfL	10/26/15 16:13

Lab Sample ID: ICIS 480-270613/5 Client Sample ID:

Date Analyzed: 10/23/15 09:27 Lab File ID: X009013901.D GC Column: RXI-5Sil MS ID: 0.25(mm)

COMPOUND NAME	RETENTION TIME	MANUAL INTEGRATION		
		REASON	ANALYST	DATE
Benzoic acid	7.93	Assign Peak	WolfL	10/26/15 16:04
Caprolactam	8.75	Poor chromatography	WolfL	10/26/15 16:04

Lab Sample ID: IC 480-270613/6 Client Sample ID:

Date Analyzed: 10/23/15 09:54 Lab File ID: X009013902.D GC Column: RXI-5Sil MS ID: 0.25(mm)

COMPOUND NAME	RETENTION TIME	MANUAL INTEGRATION		
		REASON	ANALYST	DATE
Benzoic acid	7.96	Assign Peak	WolfL	10/26/15 16:07
Caprolactam	8.77	Poor chromatography	WolfL	10/26/15 16:07

GC/MS SEMI VOA MANUAL INTEGRATION SUMMARY

Lab Name: TestAmerica Buffalo Job No.:

SDG No.:

Instrument ID: HP5973X Analysis Batch Number: 270613

Lab Sample ID: IC 480-270613/7 Client Sample ID:

Date Analyzed: 10/23/15 10:21 Lab File ID: X009013903.D GC Column: RXI-5Sil MS ID: 0.25(mm)

COMPOUND NAME	RETENTION TIME	MANUAL INTEGRATION		
		REASON	ANALYST	DATE
Benzoic acid	7.96	Assign Peak	WolfL	10/26/15 16:08
Caprolactam	8.77	Poor chromatography	WolfL	10/26/15 16:08

Lab Sample ID: IC 480-270613/8 Client Sample ID:

Date Analyzed: 10/23/15 10:48 Lab File ID: X009013904.D GC Column: RXI-5Sil MS ID: 0.25(mm)

COMPOUND NAME	RETENTION TIME	MANUAL INTEGRATION		
		REASON	ANALYST	DATE
Benzoic acid	7.97	Assign Peak	WolfL	10/26/15 16:10
Caprolactam	8.78	Poor chromatography	WolfL	10/26/15 16:10

GC/MS SEMI VOA MANUAL INTEGRATION SUMMARY

Lab Name: TestAmerica Buffalo Job No.: 480-89467-1

SDG No.:

Instrument ID: HP5973X Analysis Batch Number: 273506

Lab Sample ID: CCVIS 480-273506/3 Client Sample ID:

Date Analyzed: 11/05/15 10:42 Lab File ID: X009014095.D GC Column: RXI-5Sil MS ID: 0.25(mm)

COMPOUND NAME	RETENTION TIME	MANUAL INTEGRATION		
		REASON	ANALYST	DATE
Benzoic acid	7.98	Assign Peak	WolfL	11/06/15 07:52

GC VOA MANUAL INTEGRATION SUMMARY

Lab Name: TestAmerica Buffalo Job No.:

SDG No.:

Instrument ID: HP5890-3 Analysis Batch Number: 262944

Lab Sample ID: STD1 480-262944/2 IC Client Sample ID:

Date Analyzed: 09/10/15 17:44 Lab File ID: 3_67061.D GC Column: RTX-VGC ID: 0.53(mm)

COMPOUND NAME	RETENTION TIME	MANUAL INTEGRATION		
		REASON	ANALYST	DATE
a,a,a-Trifluorotoluene	4.41	Baseline Smoothing	larsonj	09/11/15 08:11
Toluene	5.16	Baseline Smoothing	larsonj	09/11/15 08:37
n-Propylbenzene	10.83	Baseline Smoothing	larsonj	09/11/15 08:11
1,3,5-Trimethylbenzene	11.50	Baseline Smoothing	larsonj	09/11/15 08:11

Lab Sample ID: STD1 480-262944/2 IC Client Sample ID:

Date Analyzed: 09/10/15 17:44 Lab File ID: 3_67061.D GC Column: RTX-VGC ID: 0.53(mm)

COMPOUND NAME	RETENTION TIME	MANUAL INTEGRATION		
		REASON	ANALYST	DATE
Toluene	6.35	Baseline Smoothing	larsonj	09/11/15 08:37
Naphthalene	18.42	Split Peak	larsonj	09/11/15 08:18

Lab Sample ID: STD2 480-262944/3 IC Client Sample ID:

Date Analyzed: 09/10/15 18:16 Lab File ID: 3_67062.D GC Column: RTX-VGC ID: 0.53(mm)

COMPOUND NAME	RETENTION TIME	MANUAL INTEGRATION		
		REASON	ANALYST	DATE
n-Propylbenzene	10.82	Baseline Smoothing	larsonj	09/11/15 08:17

Lab Sample ID: STD2 480-262944/3 IC Client Sample ID:

Date Analyzed: 09/10/15 18:16 Lab File ID: 3_67062.D GC Column: RTX-VGC ID: 0.53(mm)

COMPOUND NAME	RETENTION TIME	MANUAL INTEGRATION		
		REASON	ANALYST	DATE
Naphthalene	18.42	Split Peak	larsonj	09/11/15 08:17

GC VOA MANUAL INTEGRATION SUMMARY

Lab Name: TestAmerica Buffalo Job No.:

SDG No.:

Instrument ID: HP5890-3 Analysis Batch Number: 262944

Lab Sample ID: STD3 480-262944/4 IC Client Sample ID:

Date Analyzed: 09/10/15 18:48 Lab File ID: 3_67063.D GC Column: RTX-VGC ID: 0.53(mm)

COMPOUND NAME	RETENTION TIME	MANUAL INTEGRATION		
		REASON	ANALYST	DATE
Isopropylbenzene	9.70	Split Peak	larsonj	09/11/15 08:19
n-Propylbenzene	10.80	Split Peak	larsonj	09/11/15 08:19

Lab Sample ID: STD3 480-262944/4 IC Client Sample ID:

Date Analyzed: 09/10/15 18:48 Lab File ID: 3_67063.D GC Column: RTX-VGC ID: 0.53(mm)

COMPOUND NAME	RETENTION TIME	MANUAL INTEGRATION		
		REASON	ANALYST	DATE
n-Butylbenzene	16.47	Split Peak	larsonj	09/11/15 08:19

Lab Sample ID: STD4 480-262944/5 IC Client Sample ID:

Date Analyzed: 09/10/15 19:20 Lab File ID: 3_67064.D GC Column: RTX-VGC ID: 0.53(mm)

COMPOUND NAME	RETENTION TIME	MANUAL INTEGRATION		
		REASON	ANALYST	DATE
Isopropylbenzene	9.69	Split Peak	larsonj	09/11/15 08:20
4-Bromofluorobenzene	10.32	Split Peak	larsonj	09/11/15 08:20
n-Propylbenzene	10.80	Split Peak	larsonj	09/11/15 08:20

Lab Sample ID: STD4 480-262944/5 IC Client Sample ID:

Date Analyzed: 09/10/15 19:20 Lab File ID: 3_67064.D GC Column: RTX-VGC ID: 0.53(mm)

COMPOUND NAME	RETENTION TIME	MANUAL INTEGRATION		
		REASON	ANALYST	DATE
n-Butylbenzene	16.47	Split Peak	larsonj	09/11/15 08:20

GC VOA MANUAL INTEGRATION SUMMARY

Lab Name: TestAmerica Buffalo Job No.:

SDG No.:

Instrument ID: HP5890-3 Analysis Batch Number: 262944

Lab Sample ID: STD5 480-262944/6 IC Client Sample ID:

Date Analyzed: 09/10/15 19:52 Lab File ID: 3_67065.D GC Column: RTX-VGC ID: 0.53(mm)

COMPOUND NAME	RETENTION TIME	MANUAL INTEGRATION		
		REASON	ANALYST	DATE
Benzene	4.16	Split Peak	larsonj	09/11/15 08:21
n-Butylbenzene	16.47	Split Peak	larsonj	09/11/15 08:21

8021B

GC VOA MANUAL INTEGRATION SUMMARY

Lab Name: TestAmerica Buffalo Job No.: 480-89467-1

SDG No.:

Instrument ID: HP5890-3 Analysis Batch Number: 273207

Lab Sample ID: 480-89467-3 Client Sample ID: WW-01-031915-1550

Date Analyzed: 11/05/15 12:05 Lab File ID: 3_69028.D GC Column: RTX-VGC ID: 0.53(mm)

COMPOUND NAME	RETENTION TIME	MANUAL INTEGRATION		
		REASON	ANALYST	DATE
Benzene	3.50	Split Peak	larsonj	11/06/15 08:44
Toluene	5.17	Split Peak	larsonj	11/06/15 08:44

Lab Sample ID: 480-89467-4 Client Sample ID: WW-01-041415-1640

Date Analyzed: 11/05/15 12:38 Lab File ID: 3_69029.D GC Column: RTX-VGC ID: 0.53(mm)

COMPOUND NAME	RETENTION TIME	MANUAL INTEGRATION		
		REASON	ANALYST	DATE
Toluene	5.17	Split Peak	larsonj	11/06/15 08:45

Lab Sample ID: 480-89467-11 Client Sample ID: P-01-031315-1531

Date Analyzed: 11/05/15 15:10 Lab File ID: 3_69033.D GC Column: RTX-VGC ID: 0.53(mm)

COMPOUND NAME	RETENTION TIME	MANUAL INTEGRATION		
		REASON	ANALYST	DATE
Benzene	3.51	Split Peak	larsonj	11/06/15 08:51

Lab Sample ID: 480-89467-12 Client Sample ID: P-01-050615-1552

Date Analyzed: 11/05/15 16:14 Lab File ID: 3_69035.D GC Column: RTX-VGC ID: 0.53(mm)

COMPOUND NAME	RETENTION TIME	MANUAL INTEGRATION		
		REASON	ANALYST	DATE
Benzene	3.51	Split Peak	larsonj	11/06/15 08:52

Lab Sample ID: 480-89467-21 Client Sample ID: P-01-040115-1600

Date Analyzed: 11/05/15 16:45 Lab File ID: 3_69036.D GC Column: RTX-VGC ID: 0.53(mm)

COMPOUND NAME	RETENTION TIME	MANUAL INTEGRATION		
		REASON	ANALYST	DATE
Benzene	3.51	Split Peak	larsonj	11/06/15 08:52

8021B

GC VOA MANUAL INTEGRATION SUMMARY

Lab Name: TestAmerica Buffalo Job No.: 480-89467-1

SDG No.:

Instrument ID: HP5890-3 Analysis Batch Number: 273207

Lab Sample ID: 480-89467-9 Client Sample ID: WW-01-052015-1500

Date Analyzed: 11/05/15 18:41 Lab File ID: 3_69039.D GC Column: RTX-VGC ID: 0.53(mm)

COMPOUND NAME	RETENTION TIME	MANUAL INTEGRATION		
		REASON	ANALYST	DATE
Toluene	5.17	Split Peak	larsonj	11/06/15 08:53

Lab Sample ID: 480-89467-23 Client Sample ID: P-01-012215-0948

Date Analyzed: 11/05/15 19:13 Lab File ID: 3_69040.D GC Column: RTX-VGC ID: 0.53(mm)

COMPOUND NAME	RETENTION TIME	MANUAL INTEGRATION		
		REASON	ANALYST	DATE
4-Bromofluorobenzene	10.32	Split Peak	larsonj	11/06/15 10:54

Lab Sample ID: 480-89467-24 Client Sample ID: WW-01-031315-1531

Date Analyzed: 11/05/15 19:44 Lab File ID: 3_69041.D GC Column: RTX-VGC ID: 0.53(mm)

COMPOUND NAME	RETENTION TIME	MANUAL INTEGRATION		
		REASON	ANALYST	DATE
4-Bromofluorobenzene	10.32	Baseline Smoothing	larsonj	11/06/15 10:54

SAMPLE SUMMARY

Client: U.S. Army Construction Engineering Resea

Job Number: 480-89467-1

Lab Sample ID	Client Sample ID	Client Matrix	Date/Time Sampled	Date/Time Received
480-89467-1	WW-01-101514-1120	Water	10/15/2014 1120	10/20/2015 0920
480-89467-2	WW-02-030515-1557	Water	03/05/2015 1557	10/20/2015 0920
480-89467-3	WW-01-031915-1550	Water	03/19/2015 1550	10/20/2015 0920
480-89467-4	WW-01-041415-1640	Water	04/14/2015 1640	10/20/2015 0920
480-89467-5	WW-01-030515-1352	Water	03/05/2015 1352	10/20/2015 0920
480-89467-6	WW-01-042815-1600	Water	04/28/2015 1600	10/20/2015 0920
480-89467-7	WW-01-050615-1552	Water	05/06/2015 1552	10/20/2015 0920
480-89467-8	WW-01-050715-1600	Water	05/07/2015 1600	10/20/2015 0920
480-89467-9	WW-01-052015-1500	Water	05/20/2015 1500	10/20/2015 0920
480-89467-10	P-01-030515-1557	Water	03/05/2015 1557	10/20/2015 0920
480-89467-11	P-01-031315-1531	Water	03/13/2015 1531	10/20/2015 0920
480-89467-12	P-01-050615-1552	Water	05/06/2015 1552	10/20/2015 0920
480-89467-13	P-01-051315-1530	Water	05/13/2015 1530	10/20/2015 0920
480-89467-14	OS-01-031815-1530	Waste	03/18/2015 1530	10/20/2015 0920
480-89467-15	OS-01-042415-1600	Waste	04/24/2015 1600	10/20/2015 0920
480-89467-16	OS-01-042815-1600	Waste	04/28/2015 1600	10/20/2015 0920
480-89467-17	OS-01-050715-1630	Waste	05/07/2015 1630	10/20/2015 0920
480-89467-18	P-01-101514-0910	Water	10/15/2014 0910	10/20/2015 0920
480-89467-19	P-01-100814-1120	Water	10/08/2014 1120	10/20/2015 0920
480-89467-20	P-01-013015-0915	Water	01/30/2015 0915	10/20/2015 0920
480-89467-21	P-01-040115-1600	Water	04/01/2015 1600	10/20/2015 0920
480-89467-22	OS-01-101514-0910	Waste	10/15/2014 0910	10/20/2015 0920
480-89467-23	P-01-012215-0948	Water	01/22/2015 0948	10/20/2015 0920
480-89467-24	WW-01-031315-1531	Water	03/13/2015 1531	10/20/2015 0920

EXECUTIVE SUMMARY - Detections

Client: U.S. Army Construction Engineering Resea

Job Number: 480-89467-1

Lab Sample ID Analyte	Client Sample ID	Result	Qualifier	Reporting Limit	Units	Method
480-89467-1	**WW-01-101514-1120**					
Benzene		320	H	40	ug/L	8021B
Toluene		11	J H	40	ug/L	8021B
480-89467-2	**WW-02-030515-1557**					
Naphthalene		34	J H	97	ug/L	8270D
480-89467-3	**WW-01-031915-1550**					
Benzene		1500	H	160	ug/L	8021B
Toluene		240	H	160	ug/L	8021B
m,p-Xylene		75	J H	320	ug/L	8021B
Xylenes, Total		75	J H	480	ug/L	8021B
480-89467-4	**WW-01-041415-1640**					
Benzene		1800	H	40	ug/L	8021B
Toluene		890	H	40	ug/L	8021B
Ethylbenzene		450	H	40	ug/L	8021B
m,p-Xylene		300	H	80	ug/L	8021B
Xylenes, Total		300	H	120	ug/L	8021B
480-89467-5	**WW-01-030515-1352**					
Naphthalene		15	J H	97	ug/L	8270D
480-89467-6	**WW-01-042815-1600**					
Acenaphthene		30	J H	96	ug/L	8270D
Acenaphthylene		130	H	96	ug/L	8270D
Anthracene		7.4	J H	96	ug/L	8270D
Fluorene		26	J H	96	ug/L	8270D
Naphthalene		1700	H	480	ug/L	8270D
Phenanthrene		24	J H	96	ug/L	8270D
480-89467-7	**WW-01-050615-1552**					
Benzene		1900	H	40	ug/L	8021B
Toluene		1400	H	40	ug/L	8021B
Ethylbenzene		890	H	40	ug/L	8021B
m,p-Xylene		2200	H	80	ug/L	8021B
Xylenes, Total		2200	H	120	ug/L	8021B

EXECUTIVE SUMMARY - Detections

Client: U.S. Army Construction Engineering Resea

Job Number: 480-89467-1

Lab Sample ID Analyte	Client Sample ID	Result	Qualifier	Reporting Limit	Units	Method
480-89467-8	**WW-01-050715-1600**					
Acenaphthene		64	J H	96	ug/L	8270D
Acenaphthylene		210	H	96	ug/L	8270D
Anthracene		15	J H	96	ug/L	8270D
Fluorene		48	J H	96	ug/L	8270D
Naphthalene		1800	H	480	ug/L	8270D
Phenanthrene		51	J H	96	ug/L	8270D
480-89467-9	**WW-01-052015-1500**					
Benzene		670	H	40	ug/L	8021B
Toluene		87	H	40	ug/L	8021B
m,p-Xylene		55	J H	80	ug/L	8021B
o-Xylene		160	H	40	ug/L	8021B
Xylenes, Total		220	H	120	ug/L	8021B
480-89467-10	**P-01-030515-1557**					
Naphthalene		160	H	97	ug/L	8270D
480-89467-11	**P-01-031315-1531**					
Benzene		2400	H	400	ug/L	8021B
Toluene		260	J H	400	ug/L	8021B
m,p-Xylene		110	J H	800	ug/L	8021B
Xylenes, Total		110	J H	1200	ug/L	8021B
480-89467-12	**P-01-050615-1552**					
Benzene		1400	H	80	ug/L	8021B
Toluene		120	H	80	ug/L	8021B
m,p-Xylene		50	J H	160	ug/L	8021B
Xylenes, Total		50	J H	240	ug/L	8021B
480-89467-13	**P-01-051315-1530**					
Naphthalene		28	J H	100	ug/L	8270D

EXECUTIVE SUMMARY - Detections

Client: U.S. Army Construction Engineering Resea

Job Number: 480-89467-1

Lab Sample ID Analyte	Client Sample ID	Result	Qualifier	Reporting Limit	Units	Method
480-89467-14	**OS-01-031815-1530**					
Acenaphthene		430000	H	260000	ug/Kg	8270D
Acenaphthylene		930000	H	260000	ug/Kg	8270D
Fluoranthene		400000	H	260000	ug/Kg	8270D
Fluorene		770000	H	260000	ug/Kg	8270D
Naphthalene		2300000	H	260000	ug/Kg	8270D
Phenanthrene		270000	H	260000	ug/Kg	8270D
Pyrene		560000	H	260000	ug/Kg	8270D
480-89467-15	**OS-01-042415-1600**					
Acenaphthene		390000	H	31000	ug/Kg	8270D
Acenaphthylene		1400000	H	31000	ug/Kg	8270D
Anthracene		230000	H	31000	ug/Kg	8270D
Benzo[a]anthracene		150000	H	31000	ug/Kg	8270D
Benzo[a]pyrene		96000	H	31000	ug/Kg	8270D
Benzo[b]fluoranthene		34000	H	31000	ug/Kg	8270D
Benzo[g,h,i]perylene		62000	H	31000	ug/Kg	8270D
Benzo[k]fluoranthene		82000	H	31000	ug/Kg	8270D
Chrysene		140000	H	31000	ug/Kg	8270D
Fluoranthene		410000	H	31000	ug/Kg	8270D
Fluorene		590000	H	31000	ug/Kg	8270D
Indeno[1,2,3-cd]pyrene		42000	H	31000	ug/Kg	8270D
Naphthalene		3600000	H	31000	ug/Kg	8270D
Phenanthrene		1200000	H	31000	ug/Kg	8270D
Pyrene		580000	H	31000	ug/Kg	8270D
480-89467-16	**OS-01-042815-1600**					
Acenaphthene		220000	J H	570000	ug/Kg	8270D
Acenaphthylene		610000	H	570000	ug/Kg	8270D
Fluoranthene		270000	J H	570000	ug/Kg	8270D
Fluorene		420000	J H	570000	ug/Kg	8270D
Naphthalene		1100000	H	570000	ug/Kg	8270D
Pyrene		450000	J H	570000	ug/Kg	8270D
480-89467-17	**OS-01-050715-1630**					
Acenaphthylene		980000	H	280000	ug/Kg	8270D
Benzo[a]pyrene		120000	J H	280000	ug/Kg	8270D
Chrysene		170000	J H	280000	ug/Kg	8270D
Fluoranthene		610000	H	280000	ug/Kg	8270D
Fluorene		590000	H	280000	ug/Kg	8270D
Naphthalene		1200000	H	280000	ug/Kg	8270D
Phenanthrene		410000	H	280000	ug/Kg	8270D
Pyrene		750000	H	280000	ug/Kg	8270D

EXECUTIVE SUMMARY - Detections

Client: U.S. Army Construction Engineering Resea

Job Number: 480-89467-1

Lab Sample ID Analyte	Client Sample ID	Result	Qualifier	Reporting Limit	Units	Method
480-89467-18	**P-01-101514-0910**					
Naphthalene		20	J H	94	ug/L	8270D
480-89467-19	**P-01-100814-1120**					
Naphthalene		18	J H	97	ug/L	8270D
480-89467-20	**P-01-013015-0915**					
Acenaphthene		17	J H	98	ug/L	8270D
Acenaphthylene		140	H	98	ug/L	8270D
Anthracene		11	J H	98	ug/L	8270D
Fluoranthene		9.7	J H	98	ug/L	8270D
Fluorene		26	J H	98	ug/L	8270D
Naphthalene		1600	H	490	ug/L	8270D
Phenanthrene		33	J H	98	ug/L	8270D
480-89467-21	**P-01-040115-1600**					
Benzene		14000	H	160	ug/L	8021B
Toluene		5500	H	160	ug/L	8021B
Ethylbenzene		3700	H	160	ug/L	8021B
m,p-Xylene		7700	H	320	ug/L	8021B
Xylenes, Total		7700	H	480	ug/L	8021B
480-89467-22	**OS-01-101514-0910**					
Acenaphthylene		470000	H	260000	ug/Kg	8270D
Fluoranthene		190000	J H	260000	ug/Kg	8270D
Fluorene		300000	H	260000	ug/Kg	8270D
Naphthalene		1200000	H	260000	ug/Kg	8270D
Pyrene		200000	J H	260000	ug/Kg	8270D
480-89467-23	**P-01-012215-0948**					
Benzene		160	H	3.6	ug/L	8021B
Toluene		7.9	H	3.6	ug/L	8021B
m,p-Xylene		6.8	J H	7.3	ug/L	8021B
Xylenes, Total		6.8	J H	11	ug/L	8021B
480-89467-24	**WW-01-031315-1531**					
Benzene		12	H	0.91	ug/L	8021B
Toluene		1.4	H	0.91	ug/L	8021B
o-Xylene		3.7	H	0.91	ug/L	8021B
Xylenes, Total		3.7	H	2.7	ug/L	8021B

METHOD SUMMARY

Client: U.S. Army Construction Engineering Resea | Job Number: 480-89467-1

Description	Lab Location	Method	Preparation Method
Matrix:			
Matrix: Waste			
Semivolatile Organic Compounds (GC/MS)	TAL BUF	SW846 8270D	
Waste Dilution	TAL BUF		SW846 3580A
Matrix: Water			
Semivolatile Organic Compounds (GC/MS)	TAL BUF	SW846 8270D	
Liquid-Liquid Extraction (Separatory Funnel)	TAL BUF		SW846 3510C
Volatile Organic Compounds (GC)	TAL BUF	SW846 8021B	
Purge and Trap	TAL BUF		SW846 5030B

Lab References:

TAL BUF = TestAmerica Buffalo

Method References:

SW846 = "Test Methods For Evaluating Solid Waste, Physical/Chemical Methods", Third Edition, November 1986 And Its Updates.

METHOD / ANALYST SUMMARY

Client: U.S. Army Construction Engineering Resea

Job Number: 480-89467-1

Method	Analyst	Analyst ID
SW846 8270D	Richards, Devon M	DMR
SW846 8270D	Sosinski, Courtney A	CAS
SW846 8021B	Larson, Joseph R	JRL

Client: U.S. Army Construction Engineering Resea

Job Number: 480-89467-1

Client Sample ID: **WW-02-030515-1557**

Lab Sample ID: 480-89467-2
Client Matrix: Water

Date Sampled: 03/05/2015 1557
Date Received: 10/20/2015 0920

8270D Semivolatile Organic Compounds (GC/MS)

Analysis Method:	8270D	Analysis Batch:	480-273999	Instrument ID:	HP5973V
Prep Method:	3510C	Prep Batch:	480-273586	Lab File ID:	V60015.D
Dilution:	20			Initial Weight/Volume:	258 mL
Analysis Date:	11/10/2015 1723			Final Weight/Volume:	1 mL
Prep Date:	11/06/2015 1233			Injection Volume:	2 uL

Analyte	Result (ug/L)	Qualifier	MDL	RL
Acenaphthene	ND	H	7.9	97
Acenaphthylene	ND	H	7.4	97
Anthracene	ND	H	5.4	97
Benzo[a]anthracene	ND	H	7.0	97
Benzo[a]pyrene	ND	H	9.1	97
Benzo[b]fluoranthene	ND	H	6.6	97
Benzo[g,h,i]perylene	ND	H	6.8	97
Benzo[k]fluoranthene	ND	H	14	97
Chrysene	ND	H	6.4	97
Dibenz(a,h)anthracene	ND	H	8.1	97
Fluoranthene	ND	H	7.8	97
Fluorene	ND	H	7.0	97
Indeno[1,2,3-cd]pyrene	ND	H	9.1	97
Naphthalene	34	J H	15	97
Phenanthrene	ND	H	8.5	97
Pyrene	ND	H	6.6	97

Surrogate	%Rec	Qualifier	Acceptance Limits
2-Fluorobiphenyl	101		48 - 120
Nitrobenzene-d5 (Surr)	152	X	46 - 120
p-Terphenyl-d14 (Surr)	76		67 - 150

Client: U.S. Army Construction Engineering Resea

Job Number: 480-89467-1

Client Sample ID: **WW-01-030515-1352**

Lab Sample ID: 480-89467-5

Client Matrix: Water

Date Sampled: 03/05/2015 1352

Date Received: 10/20/2015 0920

8270D Semivolatile Organic Compounds (GC/MS)

Analysis Method:	8270D	Analysis Batch:	480-273999	Instrument ID:	HP5973V
Prep Method:	3510C	Prep Batch:	480-273586	Lab File ID:	V60016.D
Dilution:	20			Initial Weight/Volume:	258.9 mL
Analysis Date:	11/10/2015 1752			Final Weight/Volume:	1 mL
Prep Date:	11/06/2015 1233			Injection Volume:	2 uL

Analyte	Result (ug/L)	Qualifier	MDL	RL
Acenaphthene	ND	H	7.9	97
Acenaphthylene	ND	H	7.3	97
Anthracene	ND	H	5.4	97
Benzo[a]anthracene	ND	H	7.0	97
Benzo[a]pyrene	ND	H	9.1	97
Benzo[b]fluoranthene	ND	H	6.6	97
Benzo[g,h,i]perylene	ND	H	6.8	97
Benzo[k]fluoranthene	ND	H	14	97
Chrysene	ND	H	6.4	97
Dibenz(a,h)anthracene	ND	H	8.1	97
Fluoranthene	ND	H	7.7	97
Fluorene	ND	H	7.0	97
Indeno[1,2,3-cd]pyrene	ND	H	9.1	97
Naphthalene	15	J H	15	97
Phenanthrene	ND	H	8.5	97
Pyrene	ND	H	6.6	97

Surrogate	%Rec	Qualifier	Acceptance Limits
2-Fluorobiphenyl	91		48 - 120
Nitrobenzene-d5 (Surr)	76		46 - 120
p-Terphenyl-d14 (Surr)	73		67 - 150

Client: U.S. Army Construction Engineering Resea

Job Number: 480-89467-1

Client Sample ID: **WW-01-042815-1600**

Lab Sample ID: 480-89467-6
Client Matrix: Water

Date Sampled: 04/28/2015 1600
Date Received: 10/20/2015 0920

8270D Semivolatile Organic Compounds (GC/MS)

Analysis Method:	8270D	Analysis Batch:	480-273999	Instrument ID:	HP5973V
Prep Method:	3510C	Prep Batch:	480-273586	Lab File ID:	V60017.D
Dilution:	20			Initial Weight/Volume:	259.7 mL
Analysis Date:	11/10/2015 1821			Final Weight/Volume:	1 mL
Prep Date:	11/06/2015 1233			Injection Volume:	2 uL

Analyte	Result (ug/L)	Qualifier	MDL	RL
Acenaphthene	30	J H	7.9	96
Acenaphthylene	130	H	7.3	96
Anthracene	7.4	J H	5.4	96
Benzo[a]anthracene	ND	H	6.9	96
Benzo[a]pyrene	ND	H	9.0	96
Benzo[b]fluoranthene	ND	H	6.5	96
Benzo[g,h,i]perylene	ND	H	6.7	96
Benzo[k]fluoranthene	ND	H	14	96
Chrysene	ND	H	6.4	96
Dibenz(a,h)anthracene	ND	H	8.1	96
Fluoranthene	ND	H	7.7	96
Fluorene	26	J H	6.9	96
Indeno[1,2,3-cd]pyrene	ND	H	9.0	96
Naphthalene	1500	E H	15	96
Phenanthrene	24	J H	8.5	96
Pyrene	ND	H	6.5	96

Surrogate	%Rec	Qualifier	Acceptance Limits
2-Fluorobiphenyl	106		48 - 120
Nitrobenzene-d5 (Surr)	106		46 - 120
p-Terphenyl-d14 (Surr)	85		67 - 150

Client: U.S. Army Construction Engineering Resea

Job Number: 480-89467-1

Client Sample ID: **WW-01-042815-1600**

Lab Sample ID: 480-89467-6
Client Matrix: Water

Date Sampled: 04/28/2015 1600
Date Received: 10/20/2015 0920

8270D Semivolatile Organic Compounds (GC/MS)

Analysis Method:	8270D	Analysis Batch:	480-274392	Instrument ID:	HP5973V
Prep Method:	3510C	Prep Batch:	480-273586	Lab File ID:	V60046.D
Dilution:	100			Initial Weight/Volume:	259.7 mL
Analysis Date:	11/11/2015 1347	Run Type:	DL	Final Weight/Volume:	1 mL
Prep Date:	11/06/2015 1233			Injection Volume:	2 uL

Analyte	Result (ug/L)	Qualifier	MDL	RL
Acenaphthene	41	J H	39	480
Acenaphthylene	140	J H	37	480
Anthracene	ND	H	27	480
Benzo[a]anthracene	ND	H	35	480
Benzo[a]pyrene	ND	H	45	480
Benzo[b]fluoranthene	ND	H	33	480
Benzo[g,h,i]perylene	ND	H	34	480
Benzo[k]fluoranthene	ND	H	70	480
Chrysene	ND	H	32	480
Dibenz(a,h)anthracene	ND	H	40	480
Fluoranthene	ND	H	39	480
Fluorene	ND	H	35	480
Indeno[1,2,3-cd]pyrene	ND	H	45	480
Naphthalene	1700	H	73	480
Phenanthrene	ND	H	42	480
Pyrene	ND	H	33	480

Surrogate	%Rec	Qualifier	Acceptance Limits
2-Fluorobiphenyl	99		48 - 120
Nitrobenzene-d5 (Surr)	0	X	46 - 120
p-Terphenyl-d14 (Surr)	104		67 - 150

Client: U.S. Army Construction Engineering Resea

Job Number: 480-89467-1

Client Sample ID: **WW-01-050715-1600**

Lab Sample ID: 480-89467-8
Client Matrix: Water

Date Sampled: 05/07/2015 1600
Date Received: 10/20/2015 0920

8270D Semivolatile Organic Compounds (GC/MS)

Analysis Method:	8270D	Analysis Batch:	480-273999	Instrument ID:	HP5973V
Prep Method:	3510C	Prep Batch:	480-273586	Lab File ID:	V60018.D
Dilution:	20			Initial Weight/Volume:	259.1 mL
Analysis Date:	11/10/2015 1850			Final Weight/Volume:	1 mL
Prep Date:	11/06/2015 1233			Injection Volume:	2 uL

Analyte	Result (ug/L)	Qualifier	MDL	RL
Acenaphthene	64	J H	7.9	96
Acenaphthylene	210	H	7.3	96
Anthracene	15	J H	5.4	96
Benzo[a]anthracene	ND	H	6.9	96
Benzo[a]pyrene	ND	H	9.1	96
Benzo[b]fluoranthene	ND	H	6.6	96
Benzo[g,h,i]perylene	ND	H	6.8	96
Benzo[k]fluoranthene	ND	H	14	96
Chrysene	ND	H	6.4	96
Dibenz(a,h)anthracene	ND	H	8.1	96
Fluoranthene	ND	H	7.7	96
Fluorene	48	J H	6.9	96
Indeno[1,2,3-cd]pyrene	ND	H	9.1	96
Naphthalene	1700	E H	15	96
Phenanthrene	51	J H	8.5	96
Pyrene	ND	H	6.6	96

Surrogate	%Rec	Qualifier	Acceptance Limits
2-Fluorobiphenyl	98		48 - 120
Nitrobenzene-d5 (Surr)	0	X	46 - 120
p-Terphenyl-d14 (Surr)	72		67 - 150

Client: U.S. Army Construction Engineering Resea

Job Number: 480-89467-1

Client Sample ID: **WW-01-050715-1600**

Lab Sample ID: 480-89467-8
Client Matrix: Water

Date Sampled: 05/07/2015 1600
Date Received: 10/20/2015 0920

8270D Semivolatile Organic Compounds (GC/MS)

Analysis Method:	8270D	Analysis Batch:	480-274392	Instrument ID:	HP5973V
Prep Method:	3510C	Prep Batch:	480-273586	Lab File ID:	V60047.D
Dilution:	100			Initial Weight/Volume:	259.1 mL
Analysis Date:	11/11/2015 1416	Run Type:	DL	Final Weight/Volume:	1 mL
Prep Date:	11/06/2015 1233			Injection Volume:	2 uL

Analyte	Result (ug/L)	Qualifier	MDL	RL
Acenaphthene	52	J H	40	480
Acenaphthylene	210	J H	37	480
Anthracene	ND	H	27	480
Benzo[a]anthracene	ND	H	35	480
Benzo[a]pyrene	ND	H	45	480
Benzo[b]fluoranthene	ND	H	33	480
Benzo[g,h,i]perylene	ND	H	34	480
Benzo[k]fluoranthene	ND	H	70	480
Chrysene	ND	H	32	480
Dibenz(a,h)anthracene	ND	H	41	480
Fluoranthene	ND	H	39	480
Fluorene	47	J H	35	480
Indeno[1,2,3-cd]pyrene	ND	H	45	480
Naphthalene	1800	H	73	480
Phenanthrene	49	J H	42	480
Pyrene	ND	H	33	480

Surrogate	%Rec	Qualifier	Acceptance Limits
2-Fluorobiphenyl	87		48 - 120
Nitrobenzene-d5 (Surr)	0	X	46 - 120
p-Terphenyl-d14 (Surr)	76		67 - 150

Client: U.S. Army Construction Engineering Resea

Job Number: 480-89467-1

Client Sample ID: **P-01-030515-1557**

Lab Sample ID: 480-89467-10

Client Matrix: Water

Date Sampled: 03/05/2015 1557

Date Received: 10/20/2015 0920

8270D Semivolatile Organic Compounds (GC/MS)

Analysis Method:	8270D	Analysis Batch:	480-273999	Instrument ID:	HP5973V
Prep Method:	3510C	Prep Batch:	480-273586	Lab File ID:	V60019.D
Dilution:	20			Initial Weight/Volume:	257.5 mL
Analysis Date:	11/10/2015 1919			Final Weight/Volume:	1 mL
Prep Date:	11/06/2015 1233			Injection Volume:	2 uL

Analyte	Result (ug/L)	Qualifier	MDL	RL
Acenaphthene	ND	H	8.0	97
Acenaphthylene	ND	H	7.4	97
Anthracene	ND	H	5.4	97
Benzo[a]anthracene	ND	H	7.0	97
Benzo[a]pyrene	ND	H	9.1	97
Benzo[b]fluoranthene	ND	H	6.6	97
Benzo[g,h,i]perylene	ND	H	6.8	97
Benzo[k]fluoranthene	ND	H	14	97
Chrysene	ND	H	6.4	97
Dibenz(a,h)anthracene	ND	H	8.2	97
Fluoranthene	ND	H	7.8	97
Fluorene	ND	H	7.0	97
Indeno[1,2,3-cd]pyrene	ND	H	9.1	97
Naphthalene	160	H	15	97
Phenanthrene	ND	H	8.5	97
Pyrene	ND	H	6.6	97

Surrogate	%Rec	Qualifier	Acceptance Limits
2-Fluorobiphenyl	81		48 - 120
Nitrobenzene-d5 (Surr)	0	X	46 - 120
p-Terphenyl-d14 (Surr)	67		67 - 150

Client: U.S. Army Construction Engineering Resea

Job Number: 480-89467-1

Client Sample ID: **P-01-051315-1530**

Lab Sample ID: 480-89467-13
Client Matrix: Water

Date Sampled: 05/13/2015 1530
Date Received: 10/20/2015 0920

8270D Semivolatile Organic Compounds (GC/MS)

Analysis Method:	8270D	Analysis Batch:	480-273999	Instrument ID:	HP5973V
Prep Method:	3510C	Prep Batch:	480-273586	Lab File ID:	V60020.D
Dilution:	20			Initial Weight/Volume:	242.4 mL
Analysis Date:	11/10/2015 1948			Final Weight/Volume:	1 mL
Prep Date:	11/06/2015 1233			Injection Volume:	2 uL

Analyte	Result (ug/L)	Qualifier	MDL	RL
Acenaphthene	ND	H	8.5	100
Acenaphthylene	ND	H	7.8	100
Anthracene	ND	H	5.8	100
Benzo[a]anthracene	ND	H	7.4	100
Benzo[a]pyrene	ND	H	9.7	100
Benzo[b]fluoranthene	ND	H	7.0	100
Benzo[g,h,i]perylene	ND	H	7.2	100
Benzo[k]fluoranthene	ND	H	15	100
Chrysene	ND	H	6.8	100
Dibenz(a,h)anthracene	ND	H	8.7	100
Fluoranthene	ND	H	8.3	100
Fluorene	ND	H	7.4	100
Indeno[1,2,3-cd]pyrene	ND	H	9.7	100
Naphthalene	28	J H	16	100
Phenanthrene	ND	H	9.1	100
Pyrene	ND	H	7.0	100

Surrogate	%Rec	Qualifier	Acceptance Limits
2-Fluorobiphenyl	95		48 - 120
Nitrobenzene-d5 (Surr)	0	X	46 - 120
p-Terphenyl-d14 (Surr)	83		67 - 150

Client: U.S. Army Construction Engineering Resea

Job Number: 480-89467-1

Client Sample ID: **OS-01-031815-1530**

Lab Sample ID: 480-89467-14
Client Matrix: Waste

Date Sampled: 03/18/2015 1530
Date Received: 10/20/2015 0920

8270D Semivolatile Organic Compounds (GC/MS)

Analysis Method:	8270D	Analysis Batch:	480-273506	Instrument ID:	HP5973X
Prep Method:	3580A	Prep Batch:	480-273073	Lab File ID:	X009014108.D
Dilution:	100			Initial Weight/Volume:	+0.13 g
Analysis Date:	11/05/2015 1634			Final Weight/Volume:	1 mL
Prep Date:	11/04/2015 1345			Injection Volume:	1 uL

Analyte	DryWt Corrected: N	Result (ug/Kg)	Qualifier	MDL	RL
Acenaphthene		430000	H	3100	260000
Acenaphthylene		930000	H	2200	260000
Anthracene		ND	H	6600	260000
Benzo[a]anthracene		ND	H	4500	260000
Benzo[a]pyrene		ND	H	6300	260000
Benzo[b]fluoranthene		ND	H	5100	260000
Benzo[g,h,i]perylene		ND	H	3100	260000
Benzo[k]fluoranthene		ND	H	2900	260000
Chrysene		ND	H	2600	260000
Dibenz(a,h)anthracene		ND	H	3100	260000
Fluoranthene		400000	H	3700	260000
Fluorene		770000	H	6000	260000
Indeno[1,2,3-cd]pyrene		ND	H	7200	260000
Naphthalene		2300000	H	4300	260000
Phenanthrene		270000	H	5400	260000
Pyrene		560000	H	1700	260000

Surrogate	%Rec	Qualifier	Acceptance Limits
2-Fluorobiphenyl	94		37 - 120
Nitrobenzene-d5 (Surr)	65		34 - 132
p-Terphenyl-d14 (Surr)	94		65 - 153

Client: U.S. Army Construction Engineering Resea

Job Number: 480-89467-1

Client Sample ID: **OS-01-042415-1600**

Lab Sample ID: 480-89467-15

Client Matrix: Waste

Date Sampled: 04/24/2015 1600

Date Received: 10/20/2015 0920

8270D Semivolatile Organic Compounds (GC/MS)

Analysis Method:	8270D	Analysis Batch:	480-273506	Instrument ID:	HP5973X
Prep Method:	3580A	Prep Batch:	480-273073	Lab File ID:	X009014109.D
Dilution:	10			Initial Weight/Volume:	+0.11 g
Analysis Date:	11/05/2015 1701			Final Weight/Volume:	1 mL
Prep Date:	11/04/2015 1345			Injection Volume:	1 uL

Analyte	DryWt Corrected: N	Result (ug/Kg)	Qualifier	MDL	RL
Acenaphthene		390000	H	360	31000
Acenaphthylene		1400000	H	250	31000
Anthracene		230000	H	780	31000
Benzo[a]anthracene		150000	H	530	31000
Benzo[a]pyrene		96000	H	750	31000
Benzo[b]fluoranthene		34000	H	600	31000
Benzo[g,h,i]perylene		62000	H	360	31000
Benzo[k]fluoranthene		82000	H	350	31000
Chrysene		140000	H	310	31000
Dibenz(a,h)anthracene		ND	H	360	31000
Fluoranthene		410000	H	440	31000
Fluorene		590000	H	710	31000
Indeno[1,2,3-cd]pyrene		42000	H	850	31000
Naphthalene		3600000	H	510	31000
Phenanthrene		1200000	H	640	31000
Pyrene		580000	H	200	31000

Surrogate	%Rec	Qualifier	Acceptance Limits
2-Fluorobiphenyl	102		37 - 120
Nitrobenzene-d5 (Surr)	88		34 - 132
p-Terphenyl-d14 (Surr)	101		65 - 153

Client: U.S. Army Construction Engineering Resea

Job Number: 480-89467-1

Client Sample ID: **OS-01-042815-1600**

Lab Sample ID: 480-89467-16
Client Matrix: Waste

Date Sampled: 04/28/2015 1600
Date Received: 10/20/2015 0920

8270D Semivolatile Organic Compounds (GC/MS)

Analysis Method:	8270D	Analysis Batch:	480-273506	Instrument ID:	HP5973X
Prep Method:	3580A	Prep Batch:	480-273073	Lab File ID:	X009014110.D
Dilution:	200			Initial Weight/Volume:	+0.12 g
Analysis Date:	11/05/2015 1728			Final Weight/Volume:	1 mL
Prep Date:	11/04/2015 1345			Injection Volume:	1 uL

Analyte	DryWt Corrected: N	Result (ug/Kg)	Qualifier	MDL	RL
Acenaphthene		220000	J H	6700	570000
Acenaphthylene		610000	H	4700	570000
Anthracene		ND	H	14000	570000
Benzo[a]anthracene		ND	H	9700	570000
Benzo[a]pyrene		ND	H	14000	570000
Benzo[b]fluoranthene		ND	H	11000	570000
Benzo[g,h,i]perylene		ND	H	6700	570000
Benzo[k]fluoranthene		ND	H	6300	570000
Chrysene		ND	H	5700	570000
Dibenz(a,h)anthracene		ND	H	6700	570000
Fluoranthene		270000	J H	8000	570000
Fluorene		420000	J H	13000	570000
Indeno[1,2,3-cd]pyrene		ND	H	16000	570000
Naphthalene		1100000	H	9300	570000
Phenanthrene		ND	H	12000	570000
Pyrene		450000	J H	3700	570000

Surrogate	%Rec	Qualifier	Acceptance Limits
2-Fluorobiphenyl	83		37 - 120
Nitrobenzene-d5 (Surr)	0	X	34 - 132
p-Terphenyl-d14 (Surr)	81		65 - 153

Client: U.S. Army Construction Engineering Resea

Job Number: 480-89467-1

Client Sample ID: **OS-01-050715-1630**

Lab Sample ID: 480-89467-17
Client Matrix: Waste

Date Sampled: 05/07/2015 1630
Date Received: 10/20/2015 0920

8270D Semivolatile Organic Compounds (GC/MS)

Analysis Method:	8270D	Analysis Batch:	480-273506	Instrument ID:	HP5973X
Prep Method:	3580A	Prep Batch:	480-273073	Lab File ID:	X009014111.D
Dilution:	100			Initial Weight/Volume:	+0.12 g
Analysis Date:	11/05/2015 1755			Final Weight/Volume:	1 mL
Prep Date:	11/04/2015 1345			Injection Volume:	1 uL

Analyte	DryWt Corrected: N	Result (ug/Kg)	Qualifier	MDL	RL
Acenaphthene		ND	H	3300	280000
Acenaphthylene		980000	H	2300	280000
Anthracene		ND	H	7200	280000
Benzo[a]anthracene		ND	H	4800	280000
Benzo[a]pyrene		120000	J H	6800	280000
Benzo[b]fluoranthene		ND	H	5500	280000
Benzo[g,h,i]perylene		ND	H	3300	280000
Benzo[k]fluoranthene		ND	H	3200	280000
Chrysene		170000	J H	2800	280000
Dibenz(a,h)anthracene		ND	H	3300	280000
Fluoranthene		610000	H	4000	280000
Fluorene		590000	H	6500	280000
Indeno[1,2,3-cd]pyrene		ND	H	7800	280000
Naphthalene		1200000	H	4700	280000
Phenanthrene		410000	H	5800	280000
Pyrene		750000	H	1800	280000

Surrogate	%Rec	Qualifier	Acceptance Limits
2-Fluorobiphenyl	97		37 - 120
Nitrobenzene-d5 (Surr)	94		34 - 132
p-Terphenyl-d14 (Surr)	103		65 - 153

Client: U.S. Army Construction Engineering Resea

Job Number: 480-89467-1

Client Sample ID: **P-01-101514-0910**

Lab Sample ID: 480-89467-18
Client Matrix: Water

Date Sampled: 10/15/2014 0910
Date Received: 10/20/2015 0920

8270D Semivolatile Organic Compounds (GC/MS)

Analysis Method:	8270D	Analysis Batch:	480-273999	Instrument ID:	HP5973V
Prep Method:	3510C	Prep Batch:	480-273586	Lab File ID:	V60021.D
Dilution:	20			Initial Weight/Volume:	267 mL
Analysis Date:	11/10/2015 2017			Final Weight/Volume:	1 mL
Prep Date:	11/06/2015 1233			Injection Volume:	2 uL

Analyte	Result (ug/L)	Qualifier	MDL	RL
Acenaphthene	ND	H	7.7	94
Acenaphthylene	ND	H	7.1	94
Anthracene	ND	H	5.2	94
Benzo[a]anthracene	ND	H	6.7	94
Benzo[a]pyrene	ND	H	8.8	94
Benzo[b]fluoranthene	ND	H	6.4	94
Benzo[g,h,i]perylene	ND	H	6.6	94
Benzo[k]fluoranthene	ND	H	14	94
Chrysene	ND	H	6.2	94
Dibenz(a,h)anthracene	ND	H	7.9	94
Fluoranthene	ND	H	7.5	94
Fluorene	ND	H	6.7	94
Indeno[1,2,3-cd]pyrene	ND	H	8.8	94
Naphthalene	20	J H	14	94
Phenanthrene	ND	H	8.2	94
Pyrene	ND	H	6.4	94

Surrogate	%Rec	Qualifier	Acceptance Limits
2-Fluorobiphenyl	93		48 - 120
Nitrobenzene-d5 (Surr)	0	X	46 - 120
p-Terphenyl-d14 (Surr)	74		67 - 150

Client: U.S. Army Construction Engineering Resea

Job Number: 480-89467-1

Client Sample ID: **P-01-100814-1120**

Lab Sample ID: 480-89467-19
Client Matrix: Water

Date Sampled: 10/08/2014 1120
Date Received: 10/20/2015 0920

8270D Semivolatile Organic Compounds (GC/MS)

Analysis Method:	8270D	Analysis Batch:	480-273999	Instrument ID:	HP5973V
Prep Method:	3510C	Prep Batch:	480-273586	Lab File ID:	V60022.D
Dilution:	20			Initial Weight/Volume:	257.5 mL
Analysis Date:	11/10/2015 2046			Final Weight/Volume:	1 mL
Prep Date:	11/06/2015 1233			Injection Volume:	2 uL

Analyte	Result (ug/L)	Qualifier	MDL	RL
Acenaphthene	ND	H	8.0	97
Acenaphthylene	ND	H	7.4	97
Anthracene	ND	H	5.4	97
Benzo[a]anthracene	ND	H	7.0	97
Benzo[a]pyrene	ND	H	9.1	97
Benzo[b]fluoranthene	ND	H	6.6	97
Benzo[g,h,i]perylene	ND	H	6.8	97
Benzo[k]fluoranthene	ND	H	14	97
Chrysene	ND	H	6.4	97
Dibenz(a,h)anthracene	ND	H	8.2	97
Fluoranthene	ND	H	7.8	97
Fluorene	ND	H	7.0	97
Indeno[1,2,3-cd]pyrene	ND	H	9.1	97
Naphthalene	18	J H	15	97
Phenanthrene	ND	H	8.5	97
Pyrene	ND	H	6.6	97

Surrogate	%Rec	Qualifier	Acceptance Limits
2-Fluorobiphenyl	94		48 - 120
Nitrobenzene-d5 (Surr)	0	X	46 - 120
p-Terphenyl-d14 (Surr)	98		67 - 150

Client: U.S. Army Construction Engineering Resea

Job Number: 480-89467-1

Client Sample ID: **P-01-013015-0915**

Lab Sample ID: 480-89467-20
Client Matrix: Water

Date Sampled: 01/30/2015 0915
Date Received: 10/20/2015 0920

8270D Semivolatile Organic Compounds (GC/MS)

Analysis Method:	8270D	Analysis Batch:	480-273999	Instrument ID:	HP5973V
Prep Method:	3510C	Prep Batch:	480-273586	Lab File ID:	V60023.D
Dilution:	20			Initial Weight/Volume:	255.5 mL
Analysis Date:	11/10/2015 2115			Final Weight/Volume:	1 mL
Prep Date:	11/06/2015 1233			Injection Volume:	2 uL

Analyte	Result (ug/L)	Qualifier	MDL	RL
Acenaphthene	17	J H	8.0	98
Acenaphthylene	140	H	7.4	98
Anthracene	11	J H	5.5	98
Benzo[a]anthracene	ND	H	7.0	98
Benzo[a]pyrene	ND	H	9.2	98
Benzo[b]fluoranthene	ND	H	6.7	98
Benzo[g,h,i]perylene	ND	H	6.8	98
Benzo[k]fluoranthene	ND	H	14	98
Chrysene	ND	H	6.5	98
Dibenz(a,h)anthracene	ND	H	8.2	98
Fluoranthene	9.7	J H	7.8	98
Fluorene	26	J H	7.0	98
Indeno[1,2,3-cd]pyrene	ND	H	9.2	98
Naphthalene	1400	E H	15	98
Phenanthrene	33	J H	8.6	98
Pyrene	ND	H	6.7	98

Surrogate	%Rec	Qualifier	Acceptance Limits
2-Fluorobiphenyl	118		48 - 120
Nitrobenzene-d5 (Surr)	0	X	46 - 120
p-Terphenyl-d14 (Surr)	65	X	67 - 150

Client: U.S. Army Construction Engineering Resea

Job Number: 480-89467-1

Client Sample ID: **P-01-013015-0915**

Lab Sample ID: 480-89467-20
Client Matrix: Water

Date Sampled: 01/30/2015 0915
Date Received: 10/20/2015 0920

8270D Semivolatile Organic Compounds (GC/MS)

Analysis Method:	8270D	Analysis Batch:	480-274392	Instrument ID:	HP5973V
Prep Method:	3510C	Prep Batch:	480-273586	Lab File ID:	V60048.D
Dilution:	100			Initial Weight/Volume:	255.5 mL
Analysis Date:	11/11/2015 1445	Run Type:	DL	Final Weight/Volume:	1 mL
Prep Date:	11/06/2015 1233			Injection Volume:	2 uL

Analyte	Result (ug/L)	Qualifier	MDL	RL
Acenaphthene	ND	H	40	490
Acenaphthylene	140	J H	37	490
Anthracene	ND	H	27	490
Benzo[a]anthracene	ND	H	35	490
Benzo[a]pyrene	ND	H	46	490
Benzo[b]fluoranthene	ND	H	33	490
Benzo[g,h,i]perylene	ND	H	34	490
Benzo[k]fluoranthene	ND	H	71	490
Chrysene	ND	H	32	490
Dibenz(a,h)anthracene	ND	H	41	490
Fluoranthene	ND	H	39	490
Fluorene	ND	H	35	490
Indeno[1,2,3-cd]pyrene	ND	H	46	490
Naphthalene	1600	H	74	490
Phenanthrene	ND	H	43	490
Pyrene	ND	H	33	490

Surrogate	%Rec	Qualifier	Acceptance Limits
2-Fluorobiphenyl	89		48 - 120
Nitrobenzene-d5 (Surr)	0	X	46 - 120
p-Terphenyl-d14 (Surr)	72		67 - 150

Client: U.S. Army Construction Engineering Resea

Job Number: 480-89467-1

Client Sample ID: **OS-01-101514-0910**

Lab Sample ID: 480-89467-22

Client Matrix: Waste

Date Sampled: 10/15/2014 0910

Date Received: 10/20/2015 0920

8270D Semivolatile Organic Compounds (GC/MS)

Analysis Method:	8270D	Analysis Batch:	480-273506	Instrument ID:	HP5973X
Prep Method:	3580A	Prep Batch:	480-273073	Lab File ID:	X009014112.D
Dilution:	100			Initial Weight/Volume:	+0.13 g
Analysis Date:	11/05/2015 1821			Final Weight/Volume:	1 mL
Prep Date:	11/04/2015 1345			Injection Volume:	1 uL

Analyte	DryWt Corrected: N	Result (ug/Kg)	Qualifier	MDL	RL
Acenaphthene		ND	H	3100	260000
Acenaphthylene		470000	H	2200	260000
Anthracene		ND	H	6600	260000
Benzo[a]anthracene		ND	H	4500	260000
Benzo[a]pyrene		ND	H	6300	260000
Benzo[b]fluoranthene		ND	H	5100	260000
Benzo[g,h,i]perylene		ND	H	3100	260000
Benzo[k]fluoranthene		ND	H	2900	260000
Chrysene		ND	H	2600	260000
Dibenz(a,h)anthracene		ND	H	3100	260000
Fluoranthene		190000	J H	3700	260000
Fluorene		300000	H	6000	260000
Indeno[1,2,3-cd]pyrene		ND	H	7200	260000
Naphthalene		1200000	H	4300	260000
Phenanthrene		ND	H	5400	260000
Pyrene		200000	J H	1700	260000

Surrogate	%Rec	Qualifier	Acceptance Limits
2-Fluorobiphenyl	73		37 - 120
Nitrobenzene-d5 (Surr)	0	X	34 - 132
p-Terphenyl-d14 (Surr)	78		65 - 153

Client: U.S. Army Construction Engineering Resea

Job Number: 480-89467-1

Client Sample ID: **WW-01-101514-1120**

Lab Sample ID: 480-89467-1
Client Matrix: Water

Date Sampled: 10/15/2014 1120
Date Received: 10/20/2015 0920

8021B Volatile Organic Compounds (GC)

Analysis Method:	8021B	Analysis Batch:	480-273207	Instrument ID:	HP5890-3
Prep Method:	5030B		N/A	Initial Weight/Volume:	44 mL
Dilution:	200			Final Weight/Volume:	
Analysis Date:	11/05/2015 1133			Injection Volume:	1 uL
Prep Date:	11/05/2015 1133			Result Type:	PRIMARY

Analyte	Result (ug/L)	Qualifier	MDL	RL
Benzene	320	H	4.7	40
Toluene	11	J H	7.1	40
Ethylbenzene	ND	H	5.7	40
m,p-Xylene	ND	H	11	80
o-Xylene	ND	H	5.4	40
Xylenes, Total	ND	H	11	120

Surrogate	%Rec	Qualifier	Acceptance Limits
a,a,a-Trifluorotoluene	139		63 - 145
4-Bromofluorobenzene	122		64 - 141

Client: U.S. Army Construction Engineering Resea

Job Number: 480-89467-1

Client Sample ID: **WW-01-031915-1550**

Lab Sample ID: 480-89467-3
Client Matrix: Water

Date Sampled: 03/19/2015 1550
Date Received: 10/20/2015 0920

8021B Volatile Organic Compounds (GC)

Analysis Method:	8021B	Analysis Batch:	480-273207	Instrument ID:	HP5890-3
Prep Method:	5030B		N/A	Initial Weight/Volume:	44 mL
Dilution:	800			Final Weight/Volume:	
Analysis Date:	11/05/2015 1205			Injection Volume:	1 uL
Prep Date:	11/05/2015 1205			Result Type:	PRIMARY

Analyte	Result (ug/L)	Qualifier	MDL	RL
Benzene	1500	H	19	160
Toluene	240	H	28	160
Ethylbenzene	ND	H	23	160
m,p-Xylene	75	J H	43	320
o-Xylene	ND	H	22	160
Xylenes, Total	75	J H	43	480

Surrogate	%Rec	Qualifier	Acceptance Limits
a,a,a-Trifluorotoluene	138		63 - 145
4-Bromofluorobenzene	125		64 - 141

Client: U.S. Army Construction Engineering Resea

Job Number: 480-89467-1

Client Sample ID: **WW-01-041415-1640**

Lab Sample ID: 480-89467-4
Client Matrix: Water

Date Sampled: 04/14/2015 1640
Date Received: 10/20/2015 0920

8021B Volatile Organic Compounds (GC)

Analysis Method:	8021B	Analysis Batch:	480-273207	Instrument ID:	HP5890-3
Prep Method:	5030B		N/A	Initial Weight/Volume:	44 mL
Dilution:	200			Final Weight/Volume:	
Analysis Date:	11/05/2015 1238			Injection Volume:	1 uL
Prep Date:	11/05/2015 1238			Result Type:	PRIMARY

Analyte	Result (ug/L)	Qualifier	MDL	RL
Benzene	1800	H	4.7	40
Toluene	890	H	7.1	40
Ethylbenzene	450	H	5.7	40
m,p-Xylene	300	H	11	80
o-Xylene	ND	H	5.4	40
Xylenes, Total	300	H	11	120

Surrogate	%Rec	Qualifier	Acceptance Limits
a,a,a-Trifluorotoluene	104		63 - 145
4-Bromofluorobenzene	96		64 - 141

Client: U.S. Army Construction Engineering Resea

Job Number: 480-89467-1

Client Sample ID: **WW-01-050615-1552**

Lab Sample ID: 480-89467-7
Client Matrix: Water

Date Sampled: 05/06/2015 1552
Date Received: 10/20/2015 0920

8021B Volatile Organic Compounds (GC)

Analysis Method:	8021B	Analysis Batch:	480-273207	Instrument ID:	HP5890-3
Prep Method:	5030B		N/A	Initial Weight/Volume:	44 mL
Dilution:	200			Final Weight/Volume:	
Analysis Date:	11/05/2015 1310			Injection Volume:	1 uL
Prep Date:	11/05/2015 1310			Result Type:	PRIMARY

Analyte	Result (ug/L)	Qualifier	MDL	RL
Benzene	1900	H	4.7	40
Toluene	1400	H	7.1	40
Ethylbenzene	890	H	5.7	40
m,p-Xylene	2200	H	11	80
o-Xylene	ND	H	5.4	40
Xylenes, Total	2200	H	11	120

Surrogate	%Rec	Qualifier	Acceptance Limits
a,a,a-Trifluorotoluene	125		63 - 145
4-Bromofluorobenzene	116		64 - 141

Client: U.S. Army Construction Engineering Resea

Job Number: 480-89467-1

Client Sample ID: **WW-01-052015-1500**

Lab Sample ID: 480-89467-9
Client Matrix: Water

Date Sampled: 05/20/2015 1500
Date Received: 10/20/2015 0920

8021B Volatile Organic Compounds (GC)

Analysis Method:	8021B	Analysis Batch:	480-273207	Instrument ID:	HP5890-3
Prep Method:	5030B		N/A	Initial Weight/Volume:	44 mL
Dilution:	200			Final Weight/Volume:	
Analysis Date:	11/05/2015 1841			Injection Volume:	1 uL
Prep Date:	11/05/2015 1841			Result Type:	PRIMARY

Analyte	Result (ug/L)	Qualifier	MDL	RL
Benzene	670	H	4.7	40
Toluene	87	H	7.1	40
Ethylbenzene	ND	H	5.7	40
m,p-Xylene	55	J H	11	80
o-Xylene	160	H	5.4	40
Xylenes, Total	220	H	11	120

Surrogate	%Rec	Qualifier	Acceptance Limits
a,a,a-Trifluorotoluene	109		63 - 145
4-Bromofluorobenzene	91		64 - 141

Client: U.S. Army Construction Engineering Resea

Job Number: 480-89467-1

Client Sample ID: **P-01-031315-1531**

Lab Sample ID: 480-89467-11
Client Matrix: Water

Date Sampled: 03/13/2015 1531
Date Received: 10/20/2015 0920

8021B Volatile Organic Compounds (GC)

Analysis Method:	8021B	Analysis Batch:	480-273207	Instrument ID:	HP5890-3
Prep Method:	5030B		N/A	Initial Weight/Volume:	44 mL
Dilution:	2000			Final Weight/Volume:	
Analysis Date:	11/05/2015 1510			Injection Volume:	1 uL
Prep Date:	11/05/2015 1510			Result Type:	PRIMARY

Analyte	Result (ug/L)	Qualifier	MDL	RL
Benzene	2400	H	47	400
Toluene	260	J H	71	400
Ethylbenzene	ND	H	57	400
m,p-Xylene	110	J H	110	800
o-Xylene	ND	H	54	400
Xylenes, Total	110	J H	110	1200

Surrogate	%Rec	Qualifier	Acceptance Limits
a,a,a-Trifluorotoluene	94		63 - 145
4-Bromofluorobenzene	88		64 - 141

Client: U.S. Army Construction Engineering Resea

Job Number: 480-89467-1

Client Sample ID: **P-01-050615-1552**

Lab Sample ID: 480-89467-12
Client Matrix: Water

Date Sampled: 05/06/2015 1552
Date Received: 10/20/2015 0920

8021B Volatile Organic Compounds (GC)

Analysis Method:	8021B	Analysis Batch:	480-273207	Instrument ID:	HP5890-3
Prep Method:	5030B		N/A	Initial Weight/Volume:	44 mL
Dilution:	400			Final Weight/Volume:	
Analysis Date:	11/05/2015 1614			Injection Volume:	1 uL
Prep Date:	11/05/2015 1614			Result Type:	PRIMARY

Analyte	Result (ug/L)	Qualifier	MDL	RL
Benzene	1400	H	9.3	80
Toluene	120	H	14	80
Ethylbenzene	ND	H	11	80
m,p-Xylene	50	J H	22	160
o-Xylene	ND	H	11	80
Xylenes, Total	50	J H	22	240

Surrogate	%Rec	Qualifier	Acceptance Limits
a,a,a-Trifluorotoluene	135		63 - 145
4-Bromofluorobenzene	123		64 - 141

Client: U.S. Army Construction Engineering Resea

Job Number: 480-89467-1

Client Sample ID: **P-01-040115-1600**

Lab Sample ID: 480-89467-21
Client Matrix: Water

Date Sampled: 04/01/2015 1600
Date Received: 10/20/2015 0920

8021B Volatile Organic Compounds (GC)

Analysis Method:	8021B	Analysis Batch:	480-273207	Instrument ID:	HP5890-3
Prep Method:	5030B		N/A	Initial Weight/Volume:	44 mL
Dilution:	800			Final Weight/Volume:	
Analysis Date:	11/05/2015 1645			Injection Volume:	1 uL
Prep Date:	11/05/2015 1645			Result Type:	PRIMARY

Analyte	Result (ug/L)	Qualifier	MDL	RL
Benzene	14000	H	19	160
Toluene	5500	H	28	160
Ethylbenzene	3700	H	23	160
m,p-Xylene	7700	H	43	320
o-Xylene	ND	H	22	160
Xylenes, Total	7700	H	43	480

Surrogate	%Rec	Qualifier	Acceptance Limits
a,a,a-Trifluorotoluene	131		63 - 145
4-Bromofluorobenzene	125		64 - 141

Client: U.S. Army Construction Engineering Resea

Job Number: 480-89467-1

Client Sample ID: **P-01-012215-0948**

Lab Sample ID: 480-89467-23
Client Matrix: Water

Date Sampled: 01/22/2015 0948
Date Received: 10/20/2015 0920

8021B Volatile Organic Compounds (GC)

Analysis Method:	8021B	Analysis Batch:	480-273207	Instrument ID:	HP5890-3
Prep Method:	5030B		N/A	Initial Weight/Volume:	44 mL
Dilution:	800			Final Weight/Volume:	1.0 mL
Analysis Date:	11/05/2015 1913			Injection Volume:	1 uL
Prep Date:	11/05/2015 1913			Result Type:	PRIMARY

Analyte	Result (ug/L)	Qualifier	MDL	RL
Benzene	160	H	0.42	3.6
Toluene	7.9	H	0.65	3.6
Ethylbenzene	ND	H	0.52	3.6
m,p-Xylene	6.8	J H	0.98	7.3
o-Xylene	ND	H	0.49	3.6
Xylenes, Total	6.8	J H	0.98	11

Surrogate	%Rec	Qualifier	Acceptance Limits
a,a,a-Trifluorotoluene	124		63 - 145
4-Bromofluorobenzene	114		64 - 141

Client: U.S. Army Construction Engineering Resea

Job Number: 480-89467-1

Client Sample ID: **WW-01-031315-1531**

Lab Sample ID: 480-89467-24
Client Matrix: Water

Date Sampled: 03/13/2015 1531
Date Received: 10/20/2015 0920

8021B Volatile Organic Compounds (GC)

Analysis Method:	8021B	Analysis Batch:	480-273207	Instrument ID:	HP5890-3
Prep Method:	5030B		N/A	Initial Weight/Volume:	44 mL
Dilution:	200			Final Weight/Volume:	1.0 mL
Analysis Date:	11/05/2015 1944			Injection Volume:	1 uL
Prep Date:	11/05/2015 1944			Result Type:	PRIMARY

Analyte	Result (ug/L)	Qualifier	MDL	RL
Benzene	12	H	0.11	0.91
Toluene	1.4	H	0.16	0.91
Ethylbenzene	ND	H	0.13	0.91
m,p-Xylene	ND	H	0.25	1.8
o-Xylene	3.7	H	0.12	0.91
Xylenes, Total	3.7	H	0.25	2.7

Surrogate	%Rec	Qualifier	Acceptance Limits
a,a,a-Trifluorotoluene	146	X	63 - 145
4-Bromofluorobenzene	126		64 - 141

Surrogate Recovery Report

8270D_Semivolatile Organic Compounds (GC/MS)

Client Matrix: Waste

Lab Sample ID	Client Sample ID	NBZ %Rec	FBP %Rec	TPH %Rec
480-89467-14	OS-01-031815-1530	65	94	94
480-89467-15	OS-01-042415-1600	88	102	101
480-89467-16	OS-01-042815-1600	0X	83	81
480-89467-17	OS-01-050715-1630	94	97	103
480-89467-22	OS-01-101514-0910	0X	73	78
MB 480-273073/1-A		86	98	99
LCS 480-273073/2-A		79	93	102
LCSD 480-273073/3-A		82	93	96

Surrogate	Acceptance Limits
NBZ = Nitrobenzene-d5 (Surr)	34-132
FBP = 2-Fluorobiphenyl	37-120
TPH = p-Terphenyl-d14 (Surr)	65-153

Surrogate Recovery Report

8270D_Semivolatile Organic Compounds (GC/MS)

Client Matrix: Water

Lab Sample ID	Client Sample ID	NBZ %Rec	FBP %Rec	TPH %Rec
480-89467-2	WW-02-030515-1557	152X	101	76
480-89467-5	WW-01-030515-1352	76	91	73
480-89467-6	WW-01-042815-1600	106	106	85
480-89467-6 DL	WW-01-042815-1600 DL	0X	99	104
480-89467-8	WW-01-050715-1600	0X	98	72
480-89467-8 DL	WW-01-050715-1600 DL	0X	87	76
480-89467-10	P-01-030515-1557	0X	81	67
480-89467-13	P-01-051315-1530	0X	95	83
480-89467-18	P-01-101514-0910	0X	93	74
480-89467-19	P-01-100814-1120	0X	94	98
480-89467-20	P-01-013015-0915	0X	118	65X
480-89467-20 DL	P-01-013015-0915 DL	0X	89	72
MB 480-273586/1-A		82	86	99
LCS 480-273586/2-A		83	83	98

Surrogate	Acceptance Limits
NBZ = Nitrobenzene-d5 (Surr)	46-120
FBP = 2-Fluorobiphenyl	48-120
TPH = p-Terphenyl-d14 (Surr)	67-150

Surrogate Recovery Report

8021B Volatile Organic Compounds (GC)

Client Matrix: Water

Lab Sample ID	Client Sample ID	TFT1 %Rec	BFB1 %Rec
480-89467-1	WW-01-101514-1120	139	122
480-89467-3	WW-01-031915-1550	138	125
480-89467-4	WW-01-041415-1640	104	96
480-89467-7	WW-01-050615-1552	125	116
480-89467-9	WW-01-052015-1500	109	91
480-89467-11	P-01-031315-1531	94	88
480-89467-12	P-01-050615-1552	135	123
480-89467-21	P-01-040115-1600	131	125
480-89467-23	P-01-012215-0948	124	114
480-89467-24	WW-01-031315-1531	146X	126
MB 480-273207/3		128	123
LCS 480-273207/4		127	119
LCSD 480-273207/5		133	125

Surrogate	Acceptance Limits
TFT = a,a,a-Trifluorotoluene	63-145
BFB = 4-Bromofluorobenzene	64-141

Client: U.S. Army Construction Engineering Resea

Job Number: 480-89467-1

Method Blank - Batch: 480-273073

Method: 8270D
Preparation: 3580A

Lab Sample ID:	MB 480-273073/1-A	Analysis Batch:	480-273506	Instrument ID:	HP5973X
Client Matrix:	Waste	Prep Batch:	480-273073	Lab File ID:	X009014105.D
Dilution:	1.0	Leach Batch:	N/A	Initial Weight/Volume:	0.10 g
Analysis Date:	11/05/2015 1513	Units:	ug/Kg	Final Weight/Volume:	1 mL
Prep Date:	11/04/2015 1345			Injection Volume:	1 uL
Leach Date:	N/A				

Analyte	Result	Qual	MDL	RL
Acenaphthene	ND		40	3400
Acenaphthylene	ND		28	3400
Anthracene	ND		86	3400
Benzo[a]anthracene	ND		58	3400
Benzo[a]pyrene	ND		82	3400
Benzo[b]fluoranthene	ND		66	3400
Benzo[g,h,i]perylene	ND		40	3400
Benzo[k]fluoranthene	ND		38	3400
Chrysene	ND		34	3400
Dibenz(a,h)anthracene	ND		40	3400
Fluoranthene	ND		48	3400
Fluorene	ND		78	3400
Indeno[1,2,3-cd]pyrene	ND		94	3400
Naphthalene	ND		56	3400
Phenanthrene	ND		70	3400
Pyrene	ND		22	3400

Surrogate	% Rec	Acceptance Limits
2-Fluorobiphenyl	98	37 - 120
Nitrobenzene-d5 (Surr)	86	34 - 132
p-Terphenyl-d14 (Surr)	99	65 - 153

Client: U.S. Army Construction Engineering Resea

Job Number: 480-89467-1

Lab Control Sample/
Lab Control Sample Duplicate Recovery Report - Batch: 480-273073

Method: 8270D
Preparation: 3580A

LCS Lab Sample ID:	LCS 480-273073/2-A	Analysis Batch:	480-273506	Instrument ID:	HP5973X
Client Matrix:	Waste	Prep Batch:	480-273073	Lab File ID:	X009014106.D
Dilution:	1.0	Leach Batch:	N/A	Initial Weight/Volume:	0.10 g
Analysis Date:	11/05/2015 1540	Units:	ug/Kg	Final Weight/Volume:	1 mL
Prep Date:	11/04/2015 1345			Injection Volume:	1 uL
Leach Date:	N/A				

LCSD Lab Sample ID:	LCSD 480-273073/3-A	Analysis Batch:	480-273506	Instrument ID:	HP5973X
Client Matrix:	Waste	Prep Batch:	480-273073	Lab File ID:	X009014107.D
Dilution:	1.0	Leach Batch:	N/A	Initial Weight/Volume:	0.10 g
Analysis Date:	11/05/2015 1607	Units:	ug/Kg	Final Weight/Volume:	1 mL
Prep Date:	11/04/2015 1345			Injection Volume:	1 uL
Leach Date:	N/A				

	% Rec.						
Analyte	LCS	LCSD	Limit	RPD	RPD Limit	LCS Qual	LCSD Qual
Acenaphthene	92	91	53 - 120	1	35		
Acenaphthylene	91	90	58 - 121	0	18		
Anthracene	103	98	62 - 129	5	15		
Benzo[a]anthracene	100	94	65 - 133	7	15		
Benzo[a]pyrene	99	94	64 - 127	5	15		
Benzo[b]fluoranthene	98	93	64 - 135	5	15		
Benzo[g,h,i]perylene	102	96	50 - 152	5	15		
Benzo[k]fluoranthene	103	98	58 - 138	5	22		
Chrysene	98	93	64 - 131	5	15		
Dibenz(a,h)anthracene	101	96	54 - 148	5	15		
Fluoranthene	101	97	62 - 131	3	15		
Fluorene	97	94	63 - 126	3	15		
Indeno[1,2,3-cd]pyrene	101	95	56 - 149	6	15		
Naphthalene	88	86	46 - 120	2	29		
Phenanthrene	104	99	60 - 130	5	15		
Pyrene	103	96	51 - 133	8	35		

Surrogate	LCS % Rec	LCSD % Rec	Acceptance Limits
2-Fluorobiphenyl	93	93	37 - 120
Nitrobenzene-d5 (Surr)	79	82	34 - 132
p-Terphenyl-d14 (Surr)	102	96	65 - 153

Client: U.S. Army Construction Engineering Resea

Job Number: 480-89467-1

Laboratory Control/
Laboratory Duplicate Data Report - Batch: 480-273073

Method: 8270D
Preparation: 3580A

LCS Lab Sample ID:	LCS 480-273073/2-A	Units: ug/Kg	LCSD Lab Sample ID:	LCSD 480-273073/3-A	
Client Matrix:	Waste		Client Matrix:	Waste	
Dilution:	1.0		Dilution:	1.0	
Analysis Date:	11/05/2015 1540		Analysis Date:	11/05/2015 1607	
Prep Date:	11/04/2015 1345		Prep Date:	11/04/2015 1345	
Leach Date:	N/A		Leach Date:	N/A	

Analyte	LCS Spike Amount	LCSD Spike Amount	LCS Result/Qual	LCSD Result/Qual
Acenaphthene	500000	500000	460000	455000
Acenaphthylene	500000	500000	453000	452000
Anthracene	500000	500000	517000	492000
Benzo[a]anthracene	500000	500000	502000	469000
Benzo[a]pyrene	500000	500000	497000	471000
Benzo[b]fluoranthene	500000	500000	488000	466000
Benzo[g,h,i]perylene	500000	500000	508000	482000
Benzo[k]fluoranthene	500000	500000	514000	491000
Chrysene	500000	500000	492000	467000
Dibenz(a,h)anthracene	500000	500000	506000	481000
Fluoranthene	500000	500000	503000	486000
Fluorene	500000	500000	483000	469000
Indeno[1,2,3-cd]pyrene	500000	500000	505000	474000
Naphthalene	500000	500000	438000	428000
Phenanthrene	500000	500000	518000	495000
Pyrene	500000	500000	516000	478000

Client: U.S. Army Construction Engineering Resea

Job Number: 480-89467-1

Method Blank - Batch: 480-273586

Method: 8270D
Preparation: 3510C

Lab Sample ID:	MB 480-273586/1-A	Analysis Batch:	480-273910	Instrument ID:	HP5973V
Client Matrix:	Water	Prep Batch:	480-273586	Lab File ID:	V54275.D
Dilution:	1.0	Leach Batch:	N/A	Initial Weight/Volume:	250 mL
Analysis Date:	11/09/2015 1426	Units:	ug/L	Final Weight/Volume:	1 mL
Prep Date:	11/06/2015 1233			Injection Volume:	2 uL
Leach Date:	N/A				

Analyte	Result	Qual	MDL	RL
Acenaphthene	ND		0.41	5.0
Acenaphthylene	ND		0.38	5.0
Anthracene	ND		0.28	5.0
Benzo[a]anthracene	ND		0.36	5.0
Benzo[a]pyrene	ND		0.47	5.0
Benzo[b]fluoranthene	ND		0.34	5.0
Benzo[g,h,i]perylene	ND		0.35	5.0
Benzo[k]fluoranthene	ND		0.73	5.0
Chrysene	ND		0.33	5.0
Dibenz(a,h)anthracene	ND		0.42	5.0
Fluoranthene	ND		0.40	5.0
Fluorene	ND		0.36	5.0
Indeno[1,2,3-cd]pyrene	ND		0.47	5.0
Naphthalene	ND		0.76	5.0
Phenanthrene	ND		0.44	5.0
Pyrene	ND		0.34	5.0

Surrogate	% Rec	Acceptance Limits
2-Fluorobiphenyl	86	48 - 120
Nitrobenzene-d5 (Surr)	82	46 - 120
p-Terphenyl-d14 (Surr)	99	67 - 150

Client: U.S. Army Construction Engineering Resea

Job Number: 480-89467-1

Lab Control Sample - Batch: 480-273586

Method: 8270D
Preparation: 3510C

Lab Sample ID:	LCS 480-273586/2-A	Analysis Batch:	480-273910	Instrument ID:	HP5973V
Client Matrix:	Water	Prep Batch:	480-273586	Lab File ID:	V54276.D
Dilution:	1.0	Leach Batch:	N/A	Initial Weight/Volume:	250 mL
Analysis Date:	11/09/2015 1456	Units:	ug/L	Final Weight/Volume:	1 mL
Prep Date:	11/06/2015 1233			Injection Volume:	2 uL
Leach Date:	N/A				

Analyte	Spike Amount	Result	% Rec.	Limit	Qual
Acenaphthene	16.0	14.5	91	60 - 120	
Acenaphthylene	16.0	14.7	92	63 - 120	
Anthracene	16.0	14.8	92	58 - 148	
Benzo[a]anthracene	16.0	15.0	94	55 - 151	
Benzo[a]pyrene	16.0	14.5	90	60 - 145	
Benzo[b]fluoranthene	16.0	14.5	91	54 - 140	
Benzo[g,h,i]perylene	16.0	17.1	107	66 - 152	
Benzo[k]fluoranthene	16.0	14.4	90	51 - 153	
Chrysene	16.0	15.0	93	69 - 140	
Dibenz(a,h)anthracene	16.0	15.9	99	57 - 148	
Fluoranthene	16.0	15.4	96	55 - 147	
Fluorene	16.0	15.0	94	55 - 143	
Indeno[1,2,3-cd]pyrene	16.0	15.8	99	69 - 146	
Naphthalene	16.0	12.8	80	35 - 130	
Phenanthrene	16.0	14.9	93	57 - 147	
Pyrene	16.0	15.5	97	58 - 136	

Surrogate	% Rec	Acceptance Limits
2-Fluorobiphenyl	83	48 - 120
Nitrobenzene-d5 (Surr)	83	46 - 120
p-Terphenyl-d14 (Surr)	98	67 - 150

Client: U.S. Army Construction Engineering Resea

Job Number: 480-89467-1

Method Blank - Batch: 480-273207

Method: 8021B
Preparation: 5030B

Lab Sample ID:	MB 480-273207/3	Analysis Batch:	480-273207	Instrument ID:	HP5890-3
Client Matrix:	Water	Prep Batch:	N/A	Lab File ID:	3_69023.D
Dilution:	1.0	Leach Batch:	N/A	Initial Weight/Volume:	44 mL
Analysis Date:	11/05/2015 0828	Units:	ug/L	Final Weight/Volume:	
Prep Date:	11/05/2015 0828			Injection Volume:	1 uL
Leach Date:	N/A			Column ID:	PRIMARY

Analyte	Result	Qual	MDL	RL
Benzene	ND		0.023	0.20
Toluene	ND		0.036	0.20
Ethylbenzene	ND		0.029	0.20
m,p-Xylene	ND		0.054	0.40
o-Xylene	ND		0.027	0.20
Xylenes, Total	ND		0.054	0.60

Surrogate	% Rec	Acceptance Limits
a,a,a-Trifluorotoluene	128	63 - 145
4-Bromofluorobenzene	123	64 - 141

Surrogate	LCS % Rec	LCSD % Rec	Acceptance Limits
a,a,a-Trifluorotoluene	127	133	63 - 145
4-Bromofluorobenzene	119	125	64 - 141

DATA REPORTING QUALIFIERS

Client: U.S. Army Construction Engineering Resea

Job Number: 480-89467-1

Lab Section	Qualifier	Description
GC/MS Semi VOA		
	E	Result exceeded calibration range.
	J	Result is less than the RL but greater than or equal to the MDL and the concentration is an approximate value.
	H	Sample was prepped or analyzed beyond the specified holding time
	X	Surrogate is outside control limits
GC VOA		
	J	Result is less than the RL but greater than or equal to the MDL and the concentration is an approximate value.
	H	Sample was prepped or analyzed beyond the specified holding time
	X	Surrogate is outside control limits

Client: U.S. Army Construction Engineering Resea

Job Number: 480-89467-1

QC Association Summary

Lab Sample ID	Client Sample ID	Report Basis	Client Matrix	Method	Prep Batch
GC/MS Semi VOA					
Prep Batch: 480-273073					
LCS 480-273073/2-A	Lab Control Sample	T	Waste	3580A	
LCSD 480-273073/3-A	Lab Control Sample Duplicate	T	Waste	3580A	
MB 480-273073/1-A	Method Blank	T	Waste	3580A	
480-89467-14	OS-01-031815-1530	T	Waste	3580A	
480-89467-15	OS-01-042415-1600	T	Waste	3580A	
480-89467-16	OS-01-042815-1600	T	Waste	3580A	
480-89467-17	OS-01-050715-1630	T	Waste	3580A	
480-89467-22	OS-01-101514-0910	T	Waste	3580A	
Analysis Batch:480-273506					
LCS 480-273073/2-A	Lab Control Sample	T	Waste	8270D	480-273073
LCSD 480-273073/3-A	Lab Control Sample Duplicate	T	Waste	8270D	480-273073
MB 480-273073/1-A	Method Blank	T	Waste	8270D	480-273073
480-89467-14	OS-01-031815-1530	T	Waste	8270D	480-273073
480-89467-15	OS-01-042415-1600	T	Waste	8270D	480-273073
480-89467-16	OS-01-042815-1600	T	Waste	8270D	480-273073
480-89467-17	OS-01-050715-1630	T	Waste	8270D	480-273073
480-89467-22	OS-01-101514-0910	T	Waste	8270D	480-273073
Prep Batch: 480-273586					
LCS 480-273586/2-A	Lab Control Sample	T	Water	3510C	
MB 480-273586/1-A	Method Blank	T	Water	3510C	
480-89467-2	WW-02-030515-1557	T	Water	3510C	
480-89467-5	WW-01-030515-1352	T	Water	3510C	
480-89467-6	WW-01-042815-1600	T	Water	3510C	
480-89467-6DL	WW-01-042815-1600	T	Water	3510C	
480-89467-8	WW-01-050715-1600	T	Water	3510C	
480-89467-8DL	WW-01-050715-1600	T	Water	3510C	
480-89467-10	P-01-030515-1557	T	Water	3510C	
480-89467-13	P-01-051315-1530	T	Water	3510C	
480-89467-18	P-01-101514-0910	T	Water	3510C	
480-89467-19	P-01-100814-1120	T	Water	3510C	
480-89467-20	P-01-013015-0915	T	Water	3510C	
480-89467-20DL	P-01-013015-0915	T	Water	3510C	
Analysis Batch:480-273910					
LCS 480-273586/2-A	Lab Control Sample	T	Water	8270D	480-273586
MB 480-273586/1-A	Method Blank	T	Water	8270D	480-273586

Client: U.S. Army Construction Engineering Resea

Job Number: 480-89467-1

QC Association Summary

Lab Sample ID	Client Sample ID	Report Basis	Client Matrix	Method	Prep Batch
GC/MS Semi VOA					
Analysis Batch:480-273999					
480-89467-2	WW-02-030515-1557	T	Water	8270D	480-273586
480-89467-5	WW-01-030515-1352	T	Water	8270D	480-273586
480-89467-6	WW-01-042815-1600	T	Water	8270D	480-273586
480-89467-8	WW-01-050715-1600	T	Water	8270D	480-273586
480-89467-10	P-01-030515-1557	T	Water	8270D	480-273586
480-89467-13	P-01-051315-1530	T	Water	8270D	480-273586
480-89467-18	P-01-101514-0910	T	Water	8270D	480-273586
480-89467-19	P-01-100814-1120	T	Water	8270D	480-273586
480-89467-20	P-01-013015-0915	T	Water	8270D	480-273586
Analysis Batch:480-274392					
480-89467-6DL	WW-01-042815-1600	T	Water	8270D	480-273586
480-89467-8DL	WW-01-050715-1600	T	Water	8270D	480-273586
480-89467-20DL	P-01-013015-0915	T	Water	8270D	480-273586

Report Basis
T = Total

GC VOA					
Analysis Batch:480-266158					
				8021B	
Analysis Batch:480-273207					
LCS 480-273207/4	Lab Control Sample	T	Water	8021B	
LCSD 480-273207/5	Lab Control Sample Duplicate	T	Water	8021B	
MB 480-273207/3	Method Blank	T	Water	8021B	
480-89467-1	WW-01-101514-1120	T	Water	8021B	
480-89467-3	WW-01-031915-1550	T	Water	8021B	
480-89467-4	WW-01-041415-1640	T	Water	8021B	
480-89467-7	WW-01-050615-1552	T	Water	8021B	
480-89467-9	WW-01-052015-1500	T	Water	8021B	
480-89467-11	P-01-031315-1531	T	Water	8021B	
480-89467-12	P-01-050615-1552	T	Water	8021B	
480-89467-21	P-01-040115-1600	T	Water	8021B	
480-89467-23	P-01-012215-0948	T	Water	8021B	
480-89467-24	WW-01-031315-1531	T	Water	8021B	

Report Basis
T = Total

Laboratory Chronicle

Lab ID: 480-89467-1 **Client ID: WW-01-101514-1120**

Sample Date/Time: 10/15/2014 11:20 Received Date/Time: 10/20/2015 09:20

Method	Bottle ID	Run	Analysis Batch	Prep Batch	Date Prepared / Analyzed	Dil	Lab	Analyst
P:5030B	480-89467-B-1		480-273207		11/05/2015 11:33	200	TAL BUF	JRL
A:8021B	480-89467-B-1		480-273207		11/05/2015 11:33	200	TAL BUF	JRL

Lab ID: 480-89467-2 **Client ID: WW-02-030515-1557**

Sample Date/Time: 03/05/2015 15:57 Received Date/Time: 10/20/2015 09:20

Method	Bottle ID	Run	Analysis Batch	Prep Batch	Date Prepared / Analyzed	Dil	Lab	Analyst
P:3510C	480-89467-B-2-A		480-273999	480-273586	11/06/2015 12:33	20	TAL BUF	CPH
A:8270D	480-89467-B-2-A		480-273999	480-273586	11/10/2015 17:23	20	TAL BUF	DMR

Lab ID: 480-89467-3 **Client ID: WW-01-031915-1550**

Sample Date/Time: 03/19/2015 15:50 Received Date/Time: 10/20/2015 09:20

Method	Bottle ID	Run	Analysis Batch	Prep Batch	Date Prepared / Analyzed	Dil	Lab	Analyst
P:5030B	480-89467-B-3		480-273207		11/05/2015 12:05	800	TAL BUF	JRL
A:8021B	480-89467-B-3		480-273207		11/05/2015 12:05	800	TAL BUF	JRL

Lab ID: 480-89467-4 **Client ID: WW-01-041415-1640**

Sample Date/Time: 04/14/2015 16:40 Received Date/Time: 10/20/2015 09:20

Method	Bottle ID	Run	Analysis Batch	Prep Batch	Date Prepared / Analyzed	Dil	Lab	Analyst
P:5030B	480-89467-B-4		480-273207		11/05/2015 12:38	200	TAL BUF	JRL
A:8021B	480-89467-B-4		480-273207		11/05/2015 12:38	200	TAL BUF	JRL

Lab ID: 480-89467-5 **Client ID: WW-01-030515-1352**

Sample Date/Time: 03/05/2015 13:52 Received Date/Time: 10/20/2015 09:20

Method	Bottle ID	Run	Analysis Batch	Prep Batch	Date Prepared / Analyzed	Dil	Lab	Analyst
P:3510C	480-89467-B-5-A		480-273999	480-273586	11/06/2015 12:33	20	TAL BUF	CPH
A:8270D	480-89467-B-5-A		480-273999	480-273586	11/10/2015 17:52	20	TAL BUF	DMR

Lab ID: 480-89467-6 **Client ID: WW-01-042815-1600**

Sample Date/Time: 04/28/2015 16:00 Received Date/Time: 10/20/2015 09:20

Method	Bottle ID	Run	Analysis Batch	Prep Batch	Date Prepared / Analyzed	Dil	Lab	Analyst
P:3510C	480-89467-B-6-A		480-273999	480-273586	11/06/2015 12:33	20	TAL BUF	CPH
A:8270D	480-89467-B-6-A		480-273999	480-273586	11/10/2015 18:21	20	TAL BUF	DMR
P:3510C	480-89467-B-6-A	DL	480-274392	480-273586	11/06/2015 12:33	100	TAL BUF	CPH
A:8270D	480-89467-B-6-A	DL	480-274392	480-273586	11/11/2015 13:47	100	TAL BUF	DMR

Laboratory Chronicle

Lab ID: 480-89467-7 **Client ID: WW-01-050615-1552**

Sample Date/Time: 05/06/2015 15:52 Received Date/Time: 10/20/2015 09:20

Method	Bottle ID	Run	Analysis Batch	Prep Batch	Date Prepared / Analyzed	Dil	Lab	Analyst
P:5030B	480-89467-B-7		480-273207		11/05/2015 13:10	200	TAL BUF	JRL
A:8021B	480-89467-B-7		480-273207		11/05/2015 13:10	200	TAL BUF	JRL

Lab ID: 480-89467-8 **Client ID: WW-01-050715-1600**

Sample Date/Time: 05/07/2015 16:00 Received Date/Time: 10/20/2015 09:20

Method	Bottle ID	Run	Analysis Batch	Prep Batch	Date Prepared / Analyzed	Dil	Lab	Analyst
P:3510C	480-89467-B-8-A		480-273999	480-273586	11/06/2015 12:33	20	TAL BUF	CPH
A:8270D	480-89467-B-8-A		480-273999	480-273586	11/10/2015 18:50	20	TAL BUF	DMR
P:3510C	480-89467-B-8-A	DL	480-274392	480-273586	11/06/2015 12:33	100	TAL BUF	CPH
A:8270D	480-89467-B-8-A	DL	480-274392	480-273586	11/11/2015 14:16	100	TAL BUF	DMR

Lab ID: 480-89467-9 **Client ID: WW-01-052015-1500**

Sample Date/Time: 05/20/2015 15:00 Received Date/Time: 10/20/2015 09:20

Method	Bottle ID	Run	Analysis Batch	Prep Batch	Date Prepared / Analyzed	Dil	Lab	Analyst
P:5030B	480-89467-B-9		480-273207		11/05/2015 18:41	200	TAL BUF	JRL
A:8021B	480-89467-B-9		480-273207		11/05/2015 18:41	200	TAL BUF	JRL

Lab ID: 480-89467-10 **Client ID: P-01-030515-1557**

Sample Date/Time: 03/05/2015 15:57 Received Date/Time: 10/20/2015 09:20

Method	Bottle ID	Run	Analysis Batch	Prep Batch	Date Prepared / Analyzed	Dil	Lab	Analyst
P:3510C	480-89467-B-10-A		480-273999	480-273586	11/06/2015 12:33	20	TAL BUF	CPH
A:8270D	480-89467-B-10-A		480-273999	480-273586	11/10/2015 19:19	20	TAL BUF	DMR

Lab ID: 480-89467-11 **Client ID: P-01-031315-1531**

Sample Date/Time: 03/13/2015 15:31 Received Date/Time: 10/20/2015 09:20

Method	Bottle ID	Run	Analysis Batch	Prep Batch	Date Prepared / Analyzed	Dil	Lab	Analyst
P:5030B	480-89467-B-11		480-273207		11/05/2015 15:10	2000	TAL BUF	JRL
A:8021B	480-89467-B-11		480-273207		11/05/2015 15:10	2000	TAL BUF	JRL

Lab ID: 480-89467-12 **Client ID: P-01-050615-1552**

Sample Date/Time: 05/06/2015 15:52 Received Date/Time: 10/20/2015 09:20

Method	Bottle ID	Run	Analysis Batch	Prep Batch	Date Prepared / Analyzed	Dil	Lab	Analyst
P:5030B	480-89467-B-12		480-273207		11/05/2015 16:14	400	TAL BUF	JRL
A:8021B	480-89467-B-12		480-273207		11/05/2015 16:14	400	TAL BUF	JRL

Laboratory Chronicle

Lab ID: 480-89467-13 **Client ID: P-01-051315-1530**

Sample Date/Time: 05/13/2015 15:30 Received Date/Time: 10/20/2015 09:20

Method	Bottle ID	Run	Analysis Batch	Prep Batch	Date Prepared / Analyzed	Dil	Lab	Analyst
P:3510C	480-89467-B-13-A		480-273999	480-273586	11/06/2015 12:33	20	TAL BUF	CPH
A:8270D	480-89467-B-13-A		480-273999	480-273586	11/10/2015 19:48	20	TAL BUF	DMR

Lab ID: 480-89467-14 **Client ID: OS-01-031815-1530**

Sample Date/Time: 03/18/2015 15:30 Received Date/Time: 10/20/2015 09:20

Method	Bottle ID	Run	Analysis Batch	Prep Batch	Date Prepared / Analyzed	Dil	Lab	Analyst
P:3580A	480-89467-A-14-A		480-273506	480-273073	11/04/2015 13:45	100	TAL BUF	CAM
A:8270D	480-89467-A-14-A		480-273506	480-273073	11/05/2015 16:34	100	TAL BUF	CAS

Lab ID: 480-89467-15 **Client ID: OS-01-042415-1600**

Sample Date/Time: 04/24/2015 16:00 Received Date/Time: 10/20/2015 09:20

Method	Bottle ID	Run	Analysis Batch	Prep Batch	Date Prepared / Analyzed	Dil	Lab	Analyst
P:3580A	480-89467-A-15-A		480-273506	480-273073	11/04/2015 13:45	10	TAL BUF	CAM
A:8270D	480-89467-A-15-A		480-273506	480-273073	11/05/2015 17:01	10	TAL BUF	CAS

Lab ID: 480-89467-16 **Client ID: OS-01-042815-1600**

Sample Date/Time: 04/28/2015 16:00 Received Date/Time: 10/20/2015 09:20

Method	Bottle ID	Run	Analysis Batch	Prep Batch	Date Prepared / Analyzed	Dil	Lab	Analyst
P:3580A	480-89467-A-16-A		480-273506	480-273073	11/04/2015 13:45	200	TAL BUF	CAM
A:8270D	480-89467-A-16-A		480-273506	480-273073	11/05/2015 17:28	200	TAL BUF	CAS

Lab ID: 480-89467-17 **Client ID: OS-01-050715-1630**

Sample Date/Time: 05/07/2015 16:30 Received Date/Time: 10/20/2015 09:20

Method	Bottle ID	Run	Analysis Batch	Prep Batch	Date Prepared / Analyzed	Dil	Lab	Analyst
P:3580A	480-89467-A-17-A		480-273506	480-273073	11/04/2015 13:45	100	TAL BUF	CAM
A:8270D	480-89467-A-17-A		480-273506	480-273073	11/05/2015 17:55	100	TAL BUF	CAS

Lab ID: 480-89467-18 **Client ID: P-01-101514-0910**

Sample Date/Time: 10/15/2014 09:10 Received Date/Time: 10/20/2015 09:20

Method	Bottle ID	Run	Analysis Batch	Prep Batch	Date Prepared / Analyzed	Dil	Lab	Analyst
P:3510C	480-89467-B-18-A		480-273999	480-273586	11/06/2015 12:33	20	TAL BUF	CPH
A:8270D	480-89467-B-18-A		480-273999	480-273586	11/10/2015 20:17	20	TAL BUF	DMR

Laboratory Chronicle

Lab ID: 480-89467-19 **Client ID: P-01-100814-1120**

Sample Date/Time: 10/08/2014 11:20 Received Date/Time: 10/20/2015 09:20

Method	Bottle ID	Run	Analysis Batch	Prep Batch	Date Prepared / Analyzed	Dil	Lab	Analyst
P:3510C	480-89467-B-19-A		480-273999	480-273586	11/06/2015 12:33	20	TAL BUF	CPH
A:8270D	480-89467-B-19-A		480-273999	480-273586	11/10/2015 20:46	20	TAL BUF	DMR

Lab ID: 480-89467-20 **Client ID: P-01-013015-0915**

Sample Date/Time: 01/30/2015 09:15 Received Date/Time: 10/20/2015 09:20

Method	Bottle ID	Run	Analysis Batch	Prep Batch	Date Prepared / Analyzed	Dil	Lab	Analyst
P:3510C	480-89467-B-20-A		480-273999	480-273586	11/06/2015 12:33	20	TAL BUF	CPH
A:8270D	480-89467-B-20-A		480-273999	480-273586	11/10/2015 21:15	20	TAL BUF	DMR
P:3510C	480-89467-B-20-A	DL	480-274392	480-273586	11/06/2015 12:33	100	TAL BUF	CPH
A:8270D	480-89467-B-20-A	DL	480-274392	480-273586	11/11/2015 14:45	100	TAL BUF	DMR

Lab ID: 480-89467-21 **Client ID: P-01-040115-1600**

Sample Date/Time: 04/01/2015 16:00 Received Date/Time: 10/20/2015 09:20

Method	Bottle ID	Run	Analysis Batch	Prep Batch	Date Prepared / Analyzed	Dil	Lab	Analyst
P:5030B	480-89467-B-21		480-273207		11/05/2015 16:45	800	TAL BUF	JRL
A:8021B	480-89467-B-21		480-273207		11/05/2015 16:45	800	TAL BUF	JRL

Lab ID: 480-89467-22 **Client ID: OS-01-101514-0910**

Sample Date/Time: 10/15/2014 09:10 Received Date/Time: 10/20/2015 09:20

Method	Bottle ID	Run	Analysis Batch	Prep Batch	Date Prepared / Analyzed	Dil	Lab	Analyst
P:3580A	480-89467-A-22-A		480-273506	480-273073	11/04/2015 13:45	100	TAL BUF	CAM
A:8270D	480-89467-A-22-A		480-273506	480-273073	11/05/2015 18:21	100	TAL BUF	CAS

Lab ID: 480-89467-23 **Client ID: P-01-012215-0948**

Sample Date/Time: 01/22/2015 09:48 Received Date/Time: 10/20/2015 09:20

Method	Bottle ID	Run	Analysis Batch	Prep Batch	Date Prepared / Analyzed	Dil	Lab	Analyst
P:5030B	480-89467-B-23		480-273207		11/05/2015 19:13	800	TAL BUF	JRL
A:8021B	480-89467-B-23		480-273207		11/05/2015 19:13	800	TAL BUF	JRL

Lab ID: 480-89467-24 **Client ID: WW-01-031315-1531**

Sample Date/Time: 03/13/2015 15:31 Received Date/Time: 10/20/2015 09:20

Method	Bottle ID	Run	Analysis Batch	Prep Batch	Date Prepared / Analyzed	Dil	Lab	Analyst
P:5030B	480-89467-B-24		480-273207		11/05/2015 19:44	200	TAL BUF	JRL
A:8021B	480-89467-B-24		480-273207		11/05/2015 19:44	200	TAL BUF	JRL

Client: U.S. Army Construction Engineering Resea

Job Number: 480-89467-1

Laboratory Chronicle

Lab ID: MB **Client ID: N/A**

Sample Date/Time: N/A Received Date/Time: N/A

Method	Bottle ID	Run	Analysis Batch	Prep Batch	Date Prepared / Analyzed	Dil	Lab	Analyst
P:3580A	MB 480-273073/1-A		480-273506	480-273073	11/04/2015 13:45	1	TAL BUF	CAM
A:8270D	MB 480-273073/1-A		480-273506	480-273073	11/05/2015 15:13	1	TAL BUF	CAS
P:3510C	MB 480-273586/1-A		480-273910	480-273586	11/06/2015 12:33	1	TAL BUF	CPH
A:8270D	MB 480-273586/1-A		480-273910	480-273586	11/09/2015 14:26	1	TAL BUF	DMR
P:5030B	MB 480-273207/3		480-273207		11/05/2015 08:28	1	TAL BUF	JRL
A:8021B	MB 480-273207/3		480-273207		11/05/2015 08:28	1	TAL BUF	JRL

Lab ID: LCS **Client ID: N/A**

Sample Date/Time: N/A Received Date/Time: N/A

Method	Bottle ID	Run	Analysis Batch	Prep Batch	Date Prepared / Analyzed	Dil	Lab	Analyst
P:3580A	LCS 480-273073/2-A		480-273506	480-273073	11/04/2015 13:45	1	TAL BUF	CAM
A:8270D	LCS 480-273073/2-A		480-273506	480-273073	11/05/2015 15:40	1	TAL BUF	CAS
P:3510C	LCS 480-273586/2-A		480-273910	480-273586	11/06/2015 12:33	1	TAL BUF	CPH
A:8270D	LCS 480-273586/2-A		480-273910	480-273586	11/09/2015 14:56	1	TAL BUF	DMR
P:5030B	LCS 480-273207/4		480-273207		11/05/2015 09:00	1	TAL BUF	JRL
A:8021B	LCS 480-273207/4		480-273207		11/05/2015 09:00	1	TAL BUF	JRL

Lab ID: LCSD **Client ID: N/A**

Sample Date/Time: N/A Received Date/Time: N/A

Method	Bottle ID	Run	Analysis Batch	Prep Batch	Date Prepared / Analyzed	Dil	Lab	Analyst
P:3580A	LCSD 480-273073/3-A		480-273506	480-273073	11/04/2015 13:45	1	TAL BUF	CAM
A:8270D	LCSD 480-273073/3-A		480-273506	480-273073	11/05/2015 16:07	1	TAL BUF	CAS
P:5030B	LCSD 480-273207/5		480-273207		11/05/2015 09:31	1	TAL BUF	JRL
A:8021B	LCSD 480-273207/5		480-273207		11/05/2015 09:31	1	TAL BUF	JRL

Lab References:
TAL BUF = TestAmerica Buffalo

REAGENT TRACEABILITY SUMMARY

Lab Name: TestAmerica Buffalo Job No.: 480-89467-1

SDG No.:

Reagent ID	Exp Date	Prep Date	Dilutant Used	Reagent Final Volume	Parent Reagent		Analyte	Concentration
					Reagent ID	Volume Added		
8021_alt_40ng_00011	12/02/15	11/02/15	Methanol, Lot 0000099494	1 mL	8021_ALT_200_00016	200 uL	Benzene	40 ug/mL
							Ethylbenzene	40 ug/mL
							m,p-Xylene	80 ug/mL
							o-Xylene	40 ug/mL
							Toluene	40 ug/mL
.8021_ALT_200_00016	12/02/15		Restek, Lot A0110888		(Purchased Reagent)		Benzene	200 ug/mL
							Ethylbenzene	200 ug/mL
							m,p-Xylene	400 ug/mL
							o-Xylene	200 ug/mL
							Toluene	200 ug/mL
8021_INT_.02_00032	09/13/15	08/18/15	water, Lot na	100 mL	8021_STK200_00060	10 uL	1,2,4-Trimethylbenzene	0.02 ug/mL
							1,3,5-Trimethylbenzene	0.02 ug/mL
							4-Isopropyltoluene	0.02 ug/mL
							Benzene	0.02 ug/mL
							Ethylbenzene	0.02 ug/mL
							Isopropylbenzene	0.02 ug/mL
							m,p-Xylene	0.04 ug/mL
							Methyl tert-butyl ether	0.02 ug/mL
							n-Butylbenzene	0.02 ug/mL
							N-Propylbenzene	0.02 ug/mL
							Naphthalene	0.02 ug/mL
							o-Xylene	0.02 ug/mL
							sec-Butylbenzene	0.02 ug/mL
							tert-Butylbenzene	0.02 ug/mL
							Toluene	0.02 ug/mL
.8021_STK200_00060	09/13/15		Ultra, Lot CM-2339		(Purchased Reagent)		1,2,4-Trimethylbenzene	200 ug/mL
							1,3,5-Trimethylbenzene	200 ug/mL
							4-Isopropyltoluene	200 ug/mL
							Benzene	200 ug/mL
							Ethylbenzene	200 ug/mL
							Isopropylbenzene	200 ug/mL
							m,p-Xylene	400 ug/mL
							Methyl tert-butyl ether	200 ug/mL
							n-Butylbenzene	200 ug/mL
							N-Propylbenzene	200 ug/mL
							Naphthalene	200 ug/mL
							o-Xylene	200 ug/mL
							sec-Butylbenzene	200 ug/mL
							tert-Butylbenzene	200 ug/mL
							Toluene	200 ug/mL
8021_INT_.06_00015	09/13/15	08/18/15	P&T Methanol, Lot na	100 mL	8021_STK200_00060	30 uL	1,2,4-Trimethylbenzene	0.06 ug/mL
							1,3,5-Trimethylbenzene	0.06 ug/mL
							4-Isopropyltoluene	0.06 ug/mL
							Benzene	0.06 ug/mL
							Ethylbenzene	0.06 ug/mL
							Isopropylbenzene	0.06 ug/mL

REAGENT TRACEABILITY SUMMARY

Lab Name: TestAmerica Buffalo Job No.: 480-89467-1

SDG No.:

Reagent ID	Exp Date	Prep Date	Dilutant Used	Reagent Final Volume	Parent Reagent		Analyte	Concentration
					Reagent ID	Volume Added		
							m,p-Xylene	0.12 ug/mL
							Methyl tert-butyl ether	0.06 ug/mL
							n-Butylbenzene	0.06 ug/mL
							N-Propylbenzene	0.06 ug/mL
							Naphthalene	0.06 ug/mL
							o-Xylene	0.06 ug/mL
							sec-Butylbenzene	0.06 ug/mL
							tert-Butylbenzene	0.06 ug/mL
							Toluene	0.06 ug/mL
.8021_STK200_00060	09/13/15		Ultra, Lot CM-2339		(Purchased Reagent)		1,2,4-Trimethylbenzene	200 ug/mL
							1,3,5-Trimethylbenzene	200 ug/mL
							4-Isopropyltoluene	200 ug/mL
							Benzene	200 ug/mL
							Ethylbenzene	200 ug/mL
							Isopropylbenzene	200 ug/mL
							m,p-Xylene	400 ug/mL
							Methyl tert-butyl ether	200 ug/mL
							n-Butylbenzene	200 ug/mL
							N-Propylbenzene	200 ug/mL
							Naphthalene	200 ug/mL
							o-Xylene	200 ug/mL
							sec-Butylbenzene	200 ug/mL
							tert-Butylbenzene	200 ug/mL
							Toluene	200 ug/mL
8021_STK200_00063	12/02/15		Ultra, Lot CM-2339		(Purchased Reagent)		Benzene	200 ug/mL
							Ethylbenzene	200 ug/mL
							m,p-Xylene	400 ug/mL
							o-Xylene	200 ug/mL
							Toluene	200 ug/mL
8021_Surr150_00055	10/02/15	09/02/15	Methanol, Lot 0000099494	10 mL	8021_SURR5000_00067	300 uL	4-Bromofluorobenzene	150 ug/mL
							a,a,a-Trifluorotoluene	150 ug/mL
.8021_SURR5000_00067	10/02/15		ULTRA, Lot CM-2340		(Purchased Reagent)		4-Bromofluorobenzene	5000 ug/mL
							a,a,a-Trifluorotoluene	5000 ug/mL
8021_Surr150_00057	12/02/15	11/02/15	Methanol, Lot 0000099494	10 mL	8021_SURR5000_00069	300 uL	4-Bromofluorobenzene	150 ug/mL
							a,a,a-Trifluorotoluene	150 ug/mL
.8021_SURR5000_00069	12/02/15		ULTRA, Lot CM-2340		(Purchased Reagent)		4-Bromofluorobenzene	5000 ug/mL
							a,a,a-Trifluorotoluene	5000 ug/mL
MB_INTSTD_STK_00014	10/01/16		Restek, Lot A0112833		(Purchased Reagent)		1,4-Dichlorobenzene-d4	2000 ug/mL
							Acenaphthene-d10	2000 ug/mL
							Chrysene-d12	2000 ug/mL
							Naphthalene-d8	2000 ug/mL
							Perylene-d12	2000 ug/mL
							Phenanthrene-d10	2000 ug/mL

REAGENT TRACEABILITY SUMMARY

Lab Name: TestAmerica Buffalo Job No.: 480-89467-1

SDG No.:

Reagent ID	Exp Date	Prep Date	Dilutant Used	Reagent Final Volume	Parent Reagent		Analyte	Concentration
					Reagent ID	Volume Added		
MB_L1LVI_WRK_00108	03/21/16	09/22/15	Methylene Chloride, Lot 118685	10 mL	MB_List1_INT_00021	12.5 uL	1,1'-Biphenyl	0.25 ug/mL
							1,2,4,5-Tetrachlorobenzene	0.25 ug/mL
							1,2,4-Trichlorobenzene	0.25 ug/mL
							1,2-Dichlorobenzene	0.25 ug/mL
							1,2-Diphenylhydrazine	0.25 ug/mL
							1,3-Dichlorobenzene	0.25 ug/mL
							1,3-Dinitrobenzene	0.25 ug/mL
							1,4-Dichlorobenzene	0.25 ug/mL
							1,4-Dioxane	0.25 ug/mL
							1-Methylnaphthalene	0.25 ug/mL
							2,2'-oxybis[1-chloropropane]	0.25 ug/mL
							2,3,4,6-Tetrachlorophenol	0.25 ug/mL
							2,4,5-Trichlorophenol	0.25 ug/mL
							2,4,6-Trichlorophenol	0.25 ug/mL
							2,4-Dichlorophenol	0.25 ug/mL
							2,4-Dimethylphenol	0.25 ug/mL
							2,4-Dinitrophenol	0.5 ug/mL
							2,4-Dinitrotoluene	0.25 ug/mL
							2,6-Dichlorophenol	0.25 ug/mL
							2,6-Dinitrotoluene	0.25 ug/mL
							2-Chloronaphthalene	0.25 ug/mL
							2-Chlorophenol	0.25 ug/mL
							2-Methylnaphthalene	0.25 ug/mL
							2-Methylphenol	0.25 ug/mL
							2-Nitroaniline	0.25 ug/mL
							2-Nitrophenol	0.25 ug/mL
							3-Nitroaniline	0.25 ug/mL
							4,6-Dinitro-2-methylphenol	0.5 ug/mL
							4-Bromophenyl phenyl ether	0.25 ug/mL
							4-Chloro-3-methylphenol	0.25 ug/mL
							4-Chloroaniline	0.25 ug/mL
							4-Chlorophenyl phenyl ether	0.25 ug/mL
							4-Methylphenol	0.25 ug/mL
							4-Nitroaniline	0.25 ug/mL
							4-Nitrophenol	0.5 ug/mL
							Acenaphthene	0.25 ug/mL
							Acenaphthylene	0.25 ug/mL
							Acetophenone	0.25 ug/mL
							Aniline	0.25 ug/mL
							Anthracene	0.25 ug/mL
							Azobenzene	0.25 ug/mL
							Benzo[a]anthracene	0.25 ug/mL
							Benzo[a]pyrene	0.25 ug/mL
							Benzo[b]fluoranthene	0.25 ug/mL
							Benzo[g,h,i]perylene	0.25 ug/mL
							Benzo[k]fluoranthene	0.25 ug/mL
							Benzyl alcohol	0.25 ug/mL

REAGENT TRACEABILITY SUMMARY

Lab Name: TestAmerica Buffalo Job No.: 480-89467-1

SDG No.:

Reagent ID	Exp Date	Prep Date	Dilutant Used	Reagent Final Volume	Parent Reagent		Analyte	Concentration
					Reagent ID	Volume Added		
							Bis(2-chloroethoxy)methane	0.25 ug/mL
							Bis(2-chloroethyl)ether	0.25 ug/mL
							Bis(2-ethylhexyl) phthalate	0.25 ug/mL
							Butyl benzyl phthalate	0.25 ug/mL
							Carbazole	0.25 ug/mL
							Chrysene	0.25 ug/mL
							Di-n-butyl phthalate	0.25 ug/mL
							Di-n-octyl phthalate	0.25 ug/mL
							Dibenz(a,h)anthracene	0.25 ug/mL
							Dibenzofuran	0.25 ug/mL
							Diethyl phthalate	0.25 ug/mL
							Dimethyl phthalate	0.25 ug/mL
							Diphenylamine	0.4275 ug/mL
							Fluoranthene	0.25 ug/mL
							Fluorene	0.25 ug/mL
							Hexachlorobenzene	0.25 ug/mL
							Hexachlorobutadiene	0.25 ug/mL
							Hexachlorocyclopentadiene	0.25 ug/mL
							Hexachloroethane	0.25 ug/mL
							Hexadecane	0.25 ug/mL
							Indeno[1,2,3-cd]pyrene	0.25 ug/mL
							Isophorone	0.25 ug/mL
							n-Decane	0.25 ug/mL
							N-Nitrosodi-n-propylamine	0.25 ug/mL
							N-Nitrosodimethylamine	0.25 ug/mL
							N-Nitrosodiphenylamine	0.5 ug/mL
							n-Octadecane	0.25 ug/mL
							Naphthalene	0.25 ug/mL
							Nitrobenzene	0.25 ug/mL
							Pentachlorophenol	0.5 ug/mL
							Phenanthrene	0.25 ug/mL
							Phenol	0.25 ug/mL
							Pyrene	0.25 ug/mL
							Pyridine	0.25 ug/mL
							Benzoic acid	0.25 ug/mL
							Indene	0.25 ug/mL
							Atrazine	0.25 ug/mL
							Benzaldehyde	0.25 ug/mL
							Caprolactam	0.25 ug/mL
							3,3'-Dichlorobenzidine	0.25 ug/mL
							Benzidine	0.25 ug/mL
							2,4,6-Tribromophenol	0.25 ug/mL
							2-Fluorobiphenyl	0.25 ug/mL
							2-Fluorophenol	0.25 ug/mL
							Nitrobenzene-d5 (Surr)	0.25 ug/mL
							p-Terphenyl-d14 (Surr)	0.25 ug/mL
							Phenol-d5	0.25 ug/mL

REAGENT TRACEABILITY SUMMARY

Lab Name: TestAmerica Buffalo Job No.: 480-89467-1

SDG No.:

Reagent ID	Exp Date	Prep Date	Dilutant Used	Reagent Final Volume	Parent Reagent		Analyte	Concentration
					Reagent ID	Volume Added		
.MB_List1_INT_00021	07/31/16	09/21/15	Methylene Chloride, Lot 118685	10 mL	MB_L1S1_STK_00023	2000 uL	1,1'-Biphenyl	200 ug/mL
							1,2,4,5-Tetrachlorobenzene	200 ug/mL
							1,2,4-Trichlorobenzene	200 ug/mL
							1,2-Dichlorobenzene	200 ug/mL
							1,2-Diphenylhydrazine	200 ug/mL
							1,3-Dichlorobenzene	200 ug/mL
							1,3-Dinitrobenzene	200 ug/mL
							1,4-Dichlorobenzene	200 ug/mL
							1,4-Dioxane	200 ug/mL
							1-Methylnaphthalene	200 ug/mL
							2,2'-oxybis[1-chloropropane]	200 ug/mL
							2,3,4,6-Tetrachlorophenol	200 ug/mL
							2,4,5-Trichlorophenol	200 ug/mL
							2,4,6-Trichlorophenol	200 ug/mL
							2,4-Dichlorophenol	200 ug/mL
							2,4-Dimethylphenol	200 ug/mL
							2,4-Dinitrophenol	400 ug/mL
							2,4-Dinitrotoluene	200 ug/mL
							2,6-Dichlorophenol	200 ug/mL
							2,6-Dinitrotoluene	200 ug/mL
							2-Chloronaphthalene	200 ug/mL
							2-Chlorophenol	200 ug/mL
							2-Methylnaphthalene	200 ug/mL
							2-Methylphenol	200 ug/mL
							2-Nitroaniline	200 ug/mL
							2-Nitrophenol	200 ug/mL
							3-Nitroaniline	200 ug/mL
							4,6-Dinitro-2-methylphenol	400 ug/mL
							4-Bromophenyl phenyl ether	200 ug/mL
							4-Chloro-3-methylphenol	200 ug/mL
							4-Chloroaniline	200 ug/mL
							4-Chlorophenyl phenyl ether	200 ug/mL
							4-Methylphenol	200 ug/mL
							4-Nitroaniline	200 ug/mL
							4-Nitrophenol	400 ug/mL
							Acenaphthene	200 ug/mL
							Acenaphthylene	200 ug/mL
							Acetophenone	200 ug/mL
							Aniline	200 ug/mL
							Anthracene	200 ug/mL
							Azobenzene	200 ug/mL
							Benzo[a]anthracene	200 ug/mL
							Benzo[a]pyrene	200 ug/mL
							Benzo[b]fluoranthene	200 ug/mL
							Benzo[g,h,i]perylene	200 ug/mL
							Benzo[k]fluoranthene	200 ug/mL
							Benzyl alcohol	200 ug/mL

REAGENT TRACEABILITY SUMMARY

Lab Name: TestAmerica Buffalo Job No.: 480-89467-1

SDG No.:

Reagent ID	Exp Date	Prep Date	Dilutant Used	Reagent Final Volume	Parent Reagent		Analyte	Concentration
					Reagent ID	Volume Added		
							Bis(2-chloroethoxy)methane	200 ug/mL
							Bis(2-chloroethyl)ether	200 ug/mL
							Bis(2-ethylhexyl) phthalate	200 ug/mL
							Butyl benzyl phthalate	200 ug/mL
							Carbazole	200 ug/mL
							Chrysene	200 ug/mL
							Di-n-butyl phthalate	200 ug/mL
							Di-n-octyl phthalate	200 ug/mL
							Dibenz(a,h)anthracene	200 ug/mL
							Dibenzofuran	200 ug/mL
							Diethyl phthalate	200 ug/mL
							Dimethyl phthalate	200 ug/mL
							Diphenylamine	342 ug/mL
							Fluoranthene	200 ug/mL
							Fluorene	200 ug/mL
							Hexachlorobenzene	200 ug/mL
							Hexachlorobutadiene	200 ug/mL
							Hexachlorocyclopentadiene	200 ug/mL
							Hexachloroethane	200 ug/mL
							Hexadecane	200 ug/mL
							Indeno[1,2,3-cd]pyrene	200 ug/mL
							Isophorone	200 ug/mL
							n-Decane	200 ug/mL
							N-Nitrosodi-n-propylamine	200 ug/mL
							N-Nitrosodimethylamine	200 ug/mL
							N-Nitrosodiphenylamine	400 ug/mL
							n-Octadecane	200 ug/mL
							Naphthalene	200 ug/mL
							Nitrobenzene	200 ug/mL
							Pentachlorophenol	400 ug/mL
							Phenanthrene	200 ug/mL
							Phenol	200 ug/mL
							Pyrene	200 ug/mL
							Pyridine	200 ug/mL
					MB_L1S10_STK_00002	1000 uL	Benzoic acid	200 ug/mL
							Indene	200 ug/mL
					MB_L1S11_STK_00002	1000 uL	Atrazine	200 ug/mL
							Benzaldehyde	200 ug/mL
							Caprolactam	200 ug/mL
					MB_L1S9_STK_00002	1000 uL	3,3'-Dichlorobenzidine	200 ug/mL
							Benzidine	200 ug/mL
					MB_SURR_STK_00042	400 uL	2,4,6-Tribromophenol	200 ug/mL
							2-Fluorobiphenyl	200 ug/mL
							2-Fluorophenol	200 ug/mL
							Nitrobenzene-d5 (Surr)	200 ug/mL
							p-Terphenyl-d14 (Surr)	200 ug/mL
							Phenol-d5	200 ug/mL
..MB_L1S1_STK_00023	12/31/16		Restek, Lot A0111934		(Purchased Reagent)		1,1'-Biphenyl	1000 ug/mL

REAGENT TRACEABILITY SUMMARY

Lab Name: TestAmerica Buffalo Job No.: 480-89467-1

SDG No.:

Reagent ID	Exp Date	Prep Date	Dilutant Used	Reagent Final Volume	Parent Reagent		Analyte	Concentration
					Reagent ID	Volume Added		
							1,2,4,5-Tetrachlorobenzene	1000 ug/mL
							1,2,4-Trichlorobenzene	1000 ug/mL
							1,2-Dichlorobenzene	1000 ug/mL
							1,2-Diphenylhydrazine	1000 ug/mL
							1,3-Dichlorobenzene	1000 ug/mL
							1,3-Dinitrobenzene	1000 ug/mL
							1,4-Dichlorobenzene	1000 ug/mL
							1,4-Dioxane	1000 ug/mL
							1-Methylnaphthalene	1000 ug/mL
							2,2'-oxybis[1-chloropropane]	1000 ug/mL
							2,3,4,6-Tetrachlorophenol	1000 ug/mL
							2,4,5-Trichlorophenol	1000 ug/mL
							2,4,6-Trichlorophenol	1000 ug/mL
							2,4-Dichlorophenol	1000 ug/mL
							2,4-Dimethylphenol	1000 ug/mL
							2,4-Dinitrophenol	2000 ug/mL
							2,4-Dinitrotoluene	1000 ug/mL
							2,6-Dichlorophenol	1000 ug/mL
							2,6-Dinitrotoluene	1000 ug/mL
							2-Chloronaphthalene	1000 ug/mL
							2-Chlorophenol	1000 ug/mL
							2-Methylnaphthalene	1000 ug/mL
							2-Methylphenol	1000 ug/mL
							2-Nitroaniline	1000 ug/mL
							2-Nitrophenol	1000 ug/mL
							3-Nitroaniline	1000 ug/mL
							4,6-Dinitro-2-methylphenol	2000 ug/mL
							4-Bromophenyl phenyl ether	1000 ug/mL
							4-Chloro-3-methylphenol	1000 ug/mL
							4-Chloroaniline	1000 ug/mL
							4-Chlorophenyl phenyl ether	1000 ug/mL
							4-Methylphenol	1000 ug/mL
							4-Nitroaniline	1000 ug/mL
							4-Nitrophenol	2000 ug/mL
							Acenaphthene	1000 ug/mL
							Acenaphthylene	1000 ug/mL
							Acetophenone	1000 ug/mL
							Aniline	1000 ug/mL
							Anthracene	1000 ug/mL
							Azobenzene	1000 ug/mL
							Benzo[a]anthracene	1000 ug/mL
							Benzo[a]pyrene	1000 ug/mL
							Benzo[b]fluoranthene	1000 ug/mL
							Benzo[g,h,i]perylene	1000 ug/mL
							Benzo[k]fluoranthene	1000 ug/mL
							Benzyl alcohol	1000 ug/mL
							Bis(2-chloroethoxy)methane	1000 ug/mL
							Bis(2-chloroethyl)ether	1000 ug/mL

REAGENT TRACEABILITY SUMMARY

Lab Name: TestAmerica Buffalo Job No.: 480-89467-1

SDG No.:

Reagent ID	Exp Date	Prep Date	Dilutant Used	Reagent Final Volume	Parent Reagent		Analyte	Concentration
					Reagent ID	Volume Added		
							Bis(2-ethylhexyl) phthalate	1000 ug/mL
							Butyl benzyl phthalate	1000 ug/mL
							Carbazole	1000 ug/mL
							Chrysene	1000 ug/mL
							Di-n-butyl phthalate	1000 ug/mL
							Di-n-octyl phthalate	1000 ug/mL
							Dibenz(a,h)anthracene	1000 ug/mL
							Dibenzofuran	1000 ug/mL
							Diethyl phthalate	1000 ug/mL
							Dimethyl phthalate	1000 ug/mL
							Diphenylamine	1710 ug/mL
							Fluoranthene	1000 ug/mL
							Fluorene	1000 ug/mL
							Hexachlorobenzene	1000 ug/mL
							Hexachlorobutadiene	1000 ug/mL
							Hexachlorocyclopentadiene	1000 ug/mL
							Hexachloroethane	1000 ug/mL
							Hexadecane	1000 ug/mL
							Indeno[1,2,3-cd]pyrene	1000 ug/mL
							Isophorone	1000 ug/mL
							n-Decane	1000 ug/mL
							N-Nitrosodi-n-propylamine	1000 ug/mL
							N-Nitrosodimethylamine	1000 ug/mL
							N-Nitrosodiphenylamine	2000 ug/mL
							n-Octadecane	1000 ug/mL
							Naphthalene	1000 ug/mL
							Nitrobenzene	1000 ug/mL
							Pentachlorophenol	2000 ug/mL
							Phenanthrene	1000 ug/mL
							Phenol	1000 ug/mL
							Pyrene	1000 ug/mL
							Pyridine	1000 ug/mL
..MB_L1S10_STK_00002	08/31/16		Restek, Lot A0108988		(Purchased Reagent)		Benzoic acid	2000 ug/mL
							Indene	2000 ug/mL
..MB_L1S11_STK_00002	08/31/16		Rektek, Lot A0108989		(Purchased Reagent)		Atrazine	2000 ug/mL
							Benzaldehyde	2000 ug/mL
							Caprolactam	2000 ug/mL
..MB_L1S9_STK_00002	07/31/16		Restek, Lot A0110231		(Purchased Reagent)		3,3'-Dichlorobenzidine	2000 ug/mL
							Benzidine	2000 ug/mL
..MB_SURR_STK_00042	01/12/18		Restek, Lot A092712		(Purchased Reagent)		2,4,6-Tribromophenol	5000 ug/mL
							2-Fluorobiphenyl	5000 ug/mL
							2-Fluorophenol	5000 ug/mL
							Nitrobenzene-d5 (Surr)	5000 ug/mL
							p-Terphenyl-d14 (Surr)	5000 ug/mL
							Phenol-d5	5000 ug/mL
MB_L1LVI_WRK_00110	03/21/16	09/22/15	Methylene Chloride, Lot 118685	10 mL	MB_List1_INT_00021	100 uL	1,1'-Biphenyl	2 ug/mL
							1,2,4,5-Tetrachlorobenzene	2 ug/mL

REAGENT TRACEABILITY SUMMARY

Lab Name: TestAmerica Buffalo Job No.: 480-89467-1

SDG No.:

Reagent ID	Exp Date	Prep Date	Dilutant Used	Reagent Final Volume	Parent Reagent		Analyte	Concentration
					Reagent ID	Volume Added		
							1,2,4-Trichlorobenzene	2 ug/mL
							1,2-Dichlorobenzene	2 ug/mL
							1,2-Diphenylhydrazine	2 ug/mL
							1,3-Dichlorobenzene	2 ug/mL
							1,3-Dinitrobenzene	2 ug/mL
							1,4-Dichlorobenzene	2 ug/mL
							1,4-Dioxane	2 ug/mL
							1-Methylnaphthalene	2 ug/mL
							2,2'-oxybis[1-chloropropane]	2 ug/mL
							2,3,4,6-Tetrachlorophenol	2 ug/mL
							2,4,5-Trichlorophenol	2 ug/mL
							2,4,6-Trichlorophenol	2 ug/mL
							2,4-Dichlorophenol	2 ug/mL
							2,4-Dimethylphenol	2 ug/mL
							2,4-Dinitrophenol	4 ug/mL
							2,4-Dinitrotoluene	2 ug/mL
							2,6-Dichlorophenol	2 ug/mL
							2,6-Dinitrotoluene	2 ug/mL
							2-Chloronaphthalene	2 ug/mL
							2-Chlorophenol	2 ug/mL
							2-Methylnaphthalene	2 ug/mL
							2-Methylphenol	2 ug/mL
							2-Nitroaniline	2 ug/mL
							2-Nitrophenol	2 ug/mL
							3-Nitroaniline	2 ug/mL
							4,6-Dinitro-2-methylphenol	4 ug/mL
							4-Bromophenyl phenyl ether	2 ug/mL
							4-Chloro-3-methylphenol	2 ug/mL
							4-Chloroaniline	2 ug/mL
							4-Chlorophenyl phenyl ether	2 ug/mL
							4-Methylphenol	2 ug/mL
							4-Nitroaniline	2 ug/mL
							4-Nitrophenol	4 ug/mL
							Acenaphthene	2 ug/mL
							Acenaphthylene	2 ug/mL
							Acetophenone	2 ug/mL
							Aniline	2 ug/mL
							Anthracene	2 ug/mL
							Azobenzene	2 ug/mL
							Benzo[a]anthracene	2 ug/mL
							Benzo[a]pyrene	2 ug/mL
							Benzo[b]fluoranthene	2 ug/mL
							Benzo[g,h,i]perylene	2 ug/mL
							Benzo[k]fluoranthene	2 ug/mL
							Benzyl alcohol	2 ug/mL
							Bis(2-chloroethoxy)methane	2 ug/mL
							Bis(2-chloroethyl)ether	2 ug/mL
							Bis(2-ethylhexyl) phthalate	2 ug/mL

REAGENT TRACEABILITY SUMMARY

Lab Name: TestAmerica Buffalo Job No.: 480-89467-1

SDG No.:

Reagent ID	Exp Date	Prep Date	Dilutant Used	Reagent Final Volume	Parent Reagent		Analyte	Concentration
					Reagent ID	Volume Added		
							Butyl benzyl phthalate	2 ug/mL
							Carbazole	2 ug/mL
							Chrysene	2 ug/mL
							Di-n-butyl phthalate	2 ug/mL
							Di-n-octyl phthalate	2 ug/mL
							Dibenz(a,h)anthracene	2 ug/mL
							Dibenzofuran	2 ug/mL
							Diethyl phthalate	2 ug/mL
							Dimethyl phthalate	2 ug/mL
							Diphenylamine	3.42 ug/mL
							Fluoranthene	2 ug/mL
							Fluorene	2 ug/mL
							Hexachlorobenzene	2 ug/mL
							Hexachlorobutadiene	2 ug/mL
							Hexachlorocyclopentadiene	2 ug/mL
							Hexachloroethane	2 ug/mL
							Hexadecane	2 ug/mL
							Indeno[1,2,3-cd]pyrene	2 ug/mL
							Isophorone	2 ug/mL
							n-Decane	2 ug/mL
							N-Nitrosodi-n-propylamine	2 ug/mL
							N-Nitrosodimethylamine	2 ug/mL
							N-Nitrosodiphenylamine	4 ug/mL
							n-Octadecane	2 ug/mL
							Naphthalene	2 ug/mL
							Nitrobenzene	2 ug/mL
							Pentachlorophenol	4 ug/mL
							Phenanthrene	2 ug/mL
							Phenol	2 ug/mL
							Pyrene	2 ug/mL
							Pyridine	2 ug/mL
							Benzoic acid	2 ug/mL
							Indene	2 ug/mL
							Atrazine	2 ug/mL
							Benzaldehyde	2 ug/mL
							Caprolactam	2 ug/mL
							3,3'-Dichlorobenzidine	2 ug/mL
							Benzidine	2 ug/mL
							2,4,6-Tribromophenol	2 ug/mL
							2-Fluorobiphenyl	2 ug/mL
							2-Fluorophenol	2 ug/mL
							Nitrobenzene-d5 (Surr)	2 ug/mL
							p-Terphenyl-d14 (Surr)	2 ug/mL
							Phenol-d5	2 ug/mL
.MB_List1_INT_00021	07/31/16	09/21/15	Methylene Chloride, Lot 118685	10 mL	MB_L1S1_STK_00023	2000 uL	1,1'-Biphenyl	200 ug/mL
							1,2,4,5-Tetrachlorobenzene	200 ug/mL
							1,2,4-Trichlorobenzene	200 ug/mL

REAGENT TRACEABILITY SUMMARY

Lab Name: TestAmerica Buffalo Job No.: 480-89467-1

SDG No.:

Reagent ID	Exp Date	Prep Date	Dilutant Used	Reagent Final Volume	Parent Reagent		Analyte	Concentration
					Reagent ID	Volume Added		
							1,2-Dichlorobenzene	200 ug/mL
							1,2-Diphenylhydrazine	200 ug/mL
							1,3-Dichlorobenzene	200 ug/mL
							1,3-Dinitrobenzene	200 ug/mL
							1,4-Dichlorobenzene	200 ug/mL
							1,4-Dioxane	200 ug/mL
							1-Methylnaphthalene	200 ug/mL
							2,2'-oxybis[1-chloropropane]	200 ug/mL
							2,3,4,6-Tetrachlorophenol	200 ug/mL
							2,4,5-Trichlorophenol	200 ug/mL
							2,4,6-Trichlorophenol	200 ug/mL
							2,4-Dichlorophenol	200 ug/mL
							2,4-Dimethylphenol	200 ug/mL
							2,4-Dinitrophenol	400 ug/mL
							2,4-Dinitrotoluene	200 ug/mL
							2,6-Dichlorophenol	200 ug/mL
							2,6-Dinitrotoluene	200 ug/mL
							2-Chloronaphthalene	200 ug/mL
							2-Chlorophenol	200 ug/mL
							2-Methylnaphthalene	200 ug/mL
							2-Methylphenol	200 ug/mL
							2-Nitroaniline	200 ug/mL
							2-Nitrophenol	200 ug/mL
							3-Nitroaniline	200 ug/mL
							4,6-Dinitro-2-methylphenol	400 ug/mL
							4-Bromophenyl phenyl ether	200 ug/mL
							4-Chloro-3-methylphenol	200 ug/mL
							4-Chloroaniline	200 ug/mL
							4-Chlorophenyl phenyl ether	200 ug/mL
							4-Methylphenol	200 ug/mL
							4-Nitroaniline	200 ug/mL
							4-Nitrophenol	400 ug/mL
							Acenaphthene	200 ug/mL
							Acenaphthylene	200 ug/mL
							Acetophenone	200 ug/mL
							Aniline	200 ug/mL
							Anthracene	200 ug/mL
							Azobenzene	200 ug/mL
							Benzo[a]anthracene	200 ug/mL
							Benzo[a]pyrene	200 ug/mL
							Benzo[b]fluoranthene	200 ug/mL
							Benzo[g,h,i]perylene	200 ug/mL
							Benzo[k]fluoranthene	200 ug/mL
							Benzyl alcohol	200 ug/mL
							Bis(2-chloroethoxy)methane	200 ug/mL
							Bis(2-chloroethyl)ether	200 ug/mL
							Bis(2-ethylhexyl) phthalate	200 ug/mL
							Butyl benzyl phthalate	200 ug/mL

REAGENT TRACEABILITY SUMMARY

Lab Name: TestAmerica Buffalo Job No.: 480-89467-1

SDG No.:

Reagent ID	Exp Date	Prep Date	Dilutant Used	Reagent Final Volume	Parent Reagent		Analyte	Concentration
					Reagent ID	Volume Added		
							Carbazole	200 ug/mL
							Chrysene	200 ug/mL
							Di-n-butyl phthalate	200 ug/mL
							Di-n-octyl phthalate	200 ug/mL
							Dibenz(a,h)anthracene	200 ug/mL
							Dibenzofuran	200 ug/mL
							Diethyl phthalate	200 ug/mL
							Dimethyl phthalate	200 ug/mL
							Diphenylamine	342 ug/mL
							Fluoranthene	200 ug/mL
							Fluorene	200 ug/mL
							Hexachlorobenzene	200 ug/mL
							Hexachlorobutadiene	200 ug/mL
							Hexachlorocyclopentadiene	200 ug/mL
							Hexachloroethane	200 ug/mL
							Hexadecane	200 ug/mL
							Indeno[1,2,3-cd]pyrene	200 ug/mL
							Isophorone	200 ug/mL
							n-Decane	200 ug/mL
							N-Nitrosodi-n-propylamine	200 ug/mL
							N-Nitrosodimethylamine	200 ug/mL
							N-Nitrosodiphenylamine	400 ug/mL
							n-Octadecane	200 ug/mL
							Naphthalene	200 ug/mL
							Nitrobenzene	200 ug/mL
							Pentachlorophenol	400 ug/mL
							Phenanthrene	200 ug/mL
							Phenol	200 ug/mL
							Pyrene	200 ug/mL
							Pyridine	200 ug/mL
					MB_L1S10_STK_00002	1000 uL	Benzoic acid	200 ug/mL
							Indene	200 ug/mL
					MB_L1S11_STK_00002	1000 uL	Atrazine	200 ug/mL
							Benzaldehyde	200 ug/mL
							Caprolactam	200 ug/mL
					MB_L1S9_STK_00002	1000 uL	3,3'-Dichlorobenzidine	200 ug/mL
							Benzidine	200 ug/mL
					MB_SURR_STK_00042	400 uL	2,4,6-Tribromophenol	200 ug/mL
							2-Fluorobiphenyl	200 ug/mL
							2-Fluorophenol	200 ug/mL
							Nitrobenzene-d5 (Surr)	200 ug/mL
							p-Terphenyl-d14 (Surr)	200 ug/mL
							Phenol-d5	200 ug/mL
..MB_L1S1_STK_00023	12/31/16		Restek, Lot A0111934		(Purchased Reagent)		1,1'-Biphenyl	1000 ug/mL
							1,2,4,5-Tetrachlorobenzene	1000 ug/mL
							1,2,4-Trichlorobenzene	1000 ug/mL
							1,2-Dichlorobenzene	1000 ug/mL
							1,2-Diphenylhydrazine	1000 ug/mL

REAGENT TRACEABILITY SUMMARY

Lab Name: TestAmerica Buffalo Job No.: 480-89467-1

SDG No.:

Reagent ID	Exp Date	Prep Date	Dilutant Used	Reagent Final Volume	Parent Reagent		Analyte	Concentration
					Reagent ID	Volume Added		
							1,3-Dichlorobenzene	1000 ug/mL
							1,3-Dinitrobenzene	1000 ug/mL
							1,4-Dichlorobenzene	1000 ug/mL
							1,4-Dioxane	1000 ug/mL
							1-Methylnaphthalene	1000 ug/mL
							2,2'-oxybis[1-chloropropane]	1000 ug/mL
							2,3,4,6-Tetrachlorophenol	1000 ug/mL
							2,4,5-Trichlorophenol	1000 ug/mL
							2,4,6-Trichlorophenol	1000 ug/mL
							2,4-Dichlorophenol	1000 ug/mL
							2,4-Dimethylphenol	1000 ug/mL
							2,4-Dinitrophenol	2000 ug/mL
							2,4-Dinitrotoluene	1000 ug/mL
							2,6-Dichlorophenol	1000 ug/mL
							2,6-Dinitrotoluene	1000 ug/mL
							2-Chloronaphthalene	1000 ug/mL
							2-Chlorophenol	1000 ug/mL
							2-Methylnaphthalene	1000 ug/mL
							2-Methylphenol	1000 ug/mL
							2-Nitroaniline	1000 ug/mL
							2-Nitrophenol	1000 ug/mL
							3-Nitroaniline	1000 ug/mL
							4,6-Dinitro-2-methylphenol	2000 ug/mL
							4-Bromophenyl phenyl ether	1000 ug/mL
							4-Chloro-3-methylphenol	1000 ug/mL
							4-Chloroaniline	1000 ug/mL
							4-Chlorophenyl phenyl ether	1000 ug/mL
							4-Methylphenol	1000 ug/mL
							4-Nitroaniline	1000 ug/mL
							4-Nitrophenol	2000 ug/mL
							Acenaphthene	1000 ug/mL
							Acenaphthylene	1000 ug/mL
							Acetophenone	1000 ug/mL
							Aniline	1000 ug/mL
							Anthracene	1000 ug/mL
							Azobenzene	1000 ug/mL
							Benzo[a]anthracene	1000 ug/mL
							Benzo[a]pyrene	1000 ug/mL
							Benzo[b]fluoranthene	1000 ug/mL
							Benzo[g,h,i]perylene	1000 ug/mL
							Benzo[k]fluoranthene	1000 ug/mL
							Benzyl alcohol	1000 ug/mL
							Bis(2-chloroethoxy)methane	1000 ug/mL
							Bis(2-chloroethyl)ether	1000 ug/mL
							Bis(2-ethylhexyl) phthalate	1000 ug/mL
							Butyl benzyl phthalate	1000 ug/mL
							Carbazole	1000 ug/mL
							Chrysene	1000 ug/mL

REAGENT TRACEABILITY SUMMARY

Lab Name: TestAmerica Buffalo Job No.: 480-89467-1

SDG No.:

Reagent ID	Exp Date	Prep Date	Dilutant Used	Reagent Final Volume	Parent Reagent		Analyte	Concentration
					Reagent ID	Volume Added		
							Di-n-butyl phthalate	1000 ug/mL
							Di-n-octyl phthalate	1000 ug/mL
							Dibenz(a,h)anthracene	1000 ug/mL
							Dibenzofuran	1000 ug/mL
							Diethyl phthalate	1000 ug/mL
							Dimethyl phthalate	1000 ug/mL
							Diphenylamine	1710 ug/mL
							Fluoranthene	1000 ug/mL
							Fluorene	1000 ug/mL
							Hexachlorobenzene	1000 ug/mL
							Hexachlorobutadiene	1000 ug/mL
							Hexachlorocyclopentadiene	1000 ug/mL
							Hexachloroethane	1000 ug/mL
							Hexadecane	1000 ug/mL
							Indeno[1,2,3-cd]pyrene	1000 ug/mL
							Isophorone	1000 ug/mL
							n-Decane	1000 ug/mL
							N-Nitrosodi-n-propylamine	1000 ug/mL
							N-Nitrosodimethylamine	1000 ug/mL
							N-Nitrosodiphenylamine	2000 ug/mL
							n-Octadecane	1000 ug/mL
							Naphthalene	1000 ug/mL
							Nitrobenzene	1000 ug/mL
							Pentachlorophenol	2000 ug/mL
							Phenanthrene	1000 ug/mL
							Phenol	1000 ug/mL
							Pyrene	1000 ug/mL
							Pyridine	1000 ug/mL
..MB_L1S10_STK_00002	08/31/16		Restek, Lot A0108988		(Purchased Reagent)		Benzoic acid	2000 ug/mL
							Indene	2000 ug/mL
..MB_L1S11_STK_00002	08/31/16		Rektek, Lot A0108989		(Purchased Reagent)		Atrazine	2000 ug/mL
							Benzaldehyde	2000 ug/mL
							Caprolactam	2000 ug/mL
..MB_L1S9_STK_00002	07/31/16		Restek, Lot A0110231		(Purchased Reagent)		3,3'-Dichlorobenzidine	2000 ug/mL
							Benzidine	2000 ug/mL
..MB_SURR_STK_00042	01/12/18		Restek, Lot A092712		(Purchased Reagent)		2,4,6-Tribromophenol	5000 ug/mL
							2-Fluorobiphenyl	5000 ug/mL
							2-Fluorophenol	5000 ug/mL
							Nitrobenzene-d5 (Surr)	5000 ug/mL
							p-Terphenyl-d14 (Surr)	5000 ug/mL
							Phenol-d5	5000 ug/mL
MB_L1LVI_WRK_00112	03/21/16	09/22/15	Methylene Chloride, Lot 118685	10 mL	MB_List1_INT_00021	400 uL	1,1'-Biphenyl	8 ug/mL
							1,2,4,5-Tetrachlorobenzene	8 ug/mL
							1,2,4-Trichlorobenzene	8 ug/mL
							1,2-Dichlorobenzene	8 ug/mL
							1,2-Diphenylhydrazine	8 ug/mL
							1,3-Dichlorobenzene	8 ug/mL

REAGENT TRACEABILITY SUMMARY

Lab Name: TestAmerica Buffalo Job No.: 480-89467-1

SDG No.:

Reagent ID	Exp Date	Prep Date	Dilutant Used	Reagent Final Volume	Parent Reagent		Analyte	Concentration
					Reagent ID	Volume Added		
							1,3-Dinitrobenzene	8 ug/mL
							1,4-Dichlorobenzene	8 ug/mL
							1,4-Dioxane	8 ug/mL
							1-Methylnaphthalene	8 ug/mL
							2,2'-oxybis[1-chloropropane]	8 ug/mL
							2,3,4,6-Tetrachlorophenol	8 ug/mL
							2,4,5-Trichlorophenol	8 ug/mL
							2,4,6-Trichlorophenol	8 ug/mL
							2,4-Dichlorophenol	8 ug/mL
							2,4-Dimethylphenol	8 ug/mL
							2,4-Dinitrophenol	16 ug/mL
							2,4-Dinitrotoluene	8 ug/mL
							2,6-Dichlorophenol	8 ug/mL
							2,6-Dinitrotoluene	8 ug/mL
							2-Chloronaphthalene	8 ug/mL
							2-Chlorophenol	8 ug/mL
							2-Methylnaphthalene	8 ug/mL
							2-Methylphenol	8 ug/mL
							2-Nitroaniline	8 ug/mL
							2-Nitrophenol	8 ug/mL
							3-Nitroaniline	8 ug/mL
							4,6-Dinitro-2-methylphenol	16 ug/mL
							4-Bromophenyl phenyl ether	8 ug/mL
							4-Chloro-3-methylphenol	8 ug/mL
							4-Chloroaniline	8 ug/mL
							4-Chlorophenyl phenyl ether	8 ug/mL
							4-Methylphenol	8 ug/mL
							4-Nitroaniline	8 ug/mL
							4-Nitrophenol	16 ug/mL
							Acenaphthene	8 ug/mL
							Acenaphthylene	8 ug/mL
							Acetophenone	8 ug/mL
							Aniline	8 ug/mL
							Anthracene	8 ug/mL
							Azobenzene	8 ug/mL
							Benzo[a]anthracene	8 ug/mL
							Benzo[a]pyrene	8 ug/mL
							Benzo[b]fluoranthene	8 ug/mL
							Benzo[g,h,i]perylene	8 ug/mL
							Benzo[k]fluoranthene	8 ug/mL
							Benzyl alcohol	8 ug/mL
							Bis(2-chloroethoxy)methane	8 ug/mL
							Bis(2-chloroethyl)ether	8 ug/mL
							Bis(2-ethylhexyl) phthalate	8 ug/mL
							Butyl benzyl phthalate	8 ug/mL
							Carbazole	8 ug/mL
							Chrysene	8 ug/mL
							Di-n-butyl phthalate	8 ug/mL

REAGENT TRACEABILITY SUMMARY

Lab Name: TestAmerica Buffalo Job No.: 480-89467-1

SDG No.:

Reagent ID	Exp Date	Prep Date	Dilutant Used	Reagent Final Volume	Parent Reagent		Analyte	Concentration
					Reagent ID	Volume Added		
							Di-n-octyl phthalate	8 ug/mL
							Dibenz(a,h)anthracene	8 ug/mL
							Dibenzofuran	8 ug/mL
							Diethyl phthalate	8 ug/mL
							Dimethyl phthalate	8 ug/mL
							Diphenylamine	13.68 ug/mL
							Fluoranthene	8 ug/mL
							Fluorene	8 ug/mL
							Hexachlorobenzene	8 ug/mL
							Hexachlorobutadiene	8 ug/mL
							Hexachlorocyclopentadiene	8 ug/mL
							Hexachloroethane	8 ug/mL
							Hexadecane	8 ug/mL
							Indeno[1,2,3-cd]pyrene	8 ug/mL
							Isophorone	8 ug/mL
							n-Decane	8 ug/mL
							N-Nitrosodi-n-propylamine	8 ug/mL
							N-Nitrosodimethylamine	8 ug/mL
							N-Nitrosodiphenylamine	16 ug/mL
							n-Octadecane	8 ug/mL
							Naphthalene	8 ug/mL
							Nitrobenzene	8 ug/mL
							Pentachlorophenol	16 ug/mL
							Phenanthrene	8 ug/mL
							Phenol	8 ug/mL
							Pyrene	8 ug/mL
							Pyridine	8 ug/mL
							Benzoic acid	8 ug/mL
							Indene	8 ug/mL
							Atrazine	8 ug/mL
							Benzaldehyde	8 ug/mL
							Caprolactam	8 ug/mL
							3,3'-Dichlorobenzidine	8 ug/mL
							Benzidine	8 ug/mL
							2,4,6-Tribromophenol	8 ug/mL
							2-Fluorobiphenyl	8 ug/mL
							2-Fluorophenol	8 ug/mL
							Nitrobenzene-d5 (Surr)	8 ug/mL
							p-Terphenyl-d14 (Surr)	8 ug/mL
							Phenol-d5	8 ug/mL
.MB_List1_INT_00021	07/31/16	09/21/15	Methylene Chloride, Lot 118685	10 mL	MB_L1S1_STK_00023	2000 uL	1,1'-Biphenyl	200 ug/mL
							1,2,4,5-Tetrachlorobenzene	200 ug/mL
							1,2,4-Trichlorobenzene	200 ug/mL
							1,2-Dichlorobenzene	200 ug/mL
							1,2-Diphenylhydrazine	200 ug/mL
							1,3-Dichlorobenzene	200 ug/mL
							1,3-Dinitrobenzene	200 ug/mL

REAGENT TRACEABILITY SUMMARY

Lab Name: TestAmerica Buffalo Job No.: 480-89467-1

SDG No.:

Reagent ID	Exp Date	Prep Date	Dilutant Used	Reagent Final Volume	Parent Reagent		Analyte	Concentration
					Reagent ID	Volume Added		
							1,4-Dichlorobenzene	200 ug/mL
							1,4-Dioxane	200 ug/mL
							1-Methylnaphthalene	200 ug/mL
							2,2'-oxybis[1-chloropropane]	200 ug/mL
							2,3,4,6-Tetrachlorophenol	200 ug/mL
							2,4,5-Trichlorophenol	200 ug/mL
							2,4,6-Trichlorophenol	200 ug/mL
							2,4-Dichlorophenol	200 ug/mL
							2,4-Dimethylphenol	200 ug/mL
							2,4-Dinitrophenol	400 ug/mL
							2,4-Dinitrotoluene	200 ug/mL
							2,6-Dichlorophenol	200 ug/mL
							2,6-Dinitrotoluene	200 ug/mL
							2-Chloronaphthalene	200 ug/mL
							2-Chlorophenol	200 ug/mL
							2-Methylnaphthalene	200 ug/mL
							2-Methylphenol	200 ug/mL
							2-Nitroaniline	200 ug/mL
							2-Nitrophenol	200 ug/mL
							3-Nitroaniline	200 ug/mL
							4,6-Dinitro-2-methylphenol	400 ug/mL
							4-Bromophenyl phenyl ether	200 ug/mL
							4-Chloro-3-methylphenol	200 ug/mL
							4-Chloroaniline	200 ug/mL
							4-Chlorophenyl phenyl ether	200 ug/mL
							4-Methylphenol	200 ug/mL
							4-Nitroaniline	200 ug/mL
							4-Nitrophenol	400 ug/mL
							Acenaphthene	200 ug/mL
							Acenaphthylene	200 ug/mL
							Acetophenone	200 ug/mL
							Aniline	200 ug/mL
							Anthracene	200 ug/mL
							Azobenzene	200 ug/mL
							Benzo[a]anthracene	200 ug/mL
							Benzo[a]pyrene	200 ug/mL
							Benzo[b]fluoranthene	200 ug/mL
							Benzo[g,h,i]perylene	200 ug/mL
							Benzo[k]fluoranthene	200 ug/mL
							Benzyl alcohol	200 ug/mL
							Bis(2-chloroethoxy)methane	200 ug/mL
							Bis(2-chloroethyl)ether	200 ug/mL
							Bis(2-ethylhexyl) phthalate	200 ug/mL
							Butyl benzyl phthalate	200 ug/mL
							Carbazole	200 ug/mL
							Chrysene	200 ug/mL
							Di-n-butyl phthalate	200 ug/mL
							Di-n-octyl phthalate	200 ug/mL

REAGENT TRACEABILITY SUMMARY

Lab Name: TestAmerica Buffalo Job No.: 480-89467-1

SDG No.:

Reagent ID	Exp Date	Prep Date	Dilutant Used	Reagent Final Volume	Parent Reagent		Analyte	Concentration
					Reagent ID	Volume Added		
							Dibenz(a,h)anthracene	200 ug/mL
							Dibenzofuran	200 ug/mL
							Diethyl phthalate	200 ug/mL
							Dimethyl phthalate	200 ug/mL
							Diphenylamine	342 ug/mL
							Fluoranthene	200 ug/mL
							Fluorene	200 ug/mL
							Hexachlorobenzene	200 ug/mL
							Hexachlorobutadiene	200 ug/mL
							Hexachlorocyclopentadiene	200 ug/mL
							Hexachloroethane	200 ug/mL
							Hexadecane	200 ug/mL
							Indeno[1,2,3-cd]pyrene	200 ug/mL
							Isophorone	200 ug/mL
							n-Decane	200 ug/mL
							N-Nitrosodi-n-propylamine	200 ug/mL
							N-Nitrosodimethylamine	200 ug/mL
							N-Nitrosodiphenylamine	400 ug/mL
							n-Octadecane	200 ug/mL
							Naphthalene	200 ug/mL
							Nitrobenzene	200 ug/mL
							Pentachlorophenol	400 ug/mL
							Phenanthrene	200 ug/mL
							Phenol	200 ug/mL
							Pyrene	200 ug/mL
							Pyridine	200 ug/mL
					MB_L1S10_STK_00002	1000 uL	Benzoic acid	200 ug/mL
							Indene	200 ug/mL
					MB_L1S11_STK_00002	1000 uL	Atrazine	200 ug/mL
							Benzaldehyde	200 ug/mL
							Caprolactam	200 ug/mL
					MB_L1S9_STK_00002	1000 uL	3,3'-Dichlorobenzidine	200 ug/mL
							Benzidine	200 ug/mL
					MB_SURR_STK_00042	400 uL	2,4,6-Tribromophenol	200 ug/mL
							2-Fluorobiphenyl	200 ug/mL
							2-Fluorophenol	200 ug/mL
							Nitrobenzene-d5 (Surr)	200 ug/mL
							p-Terphenyl-d14 (Surr)	200 ug/mL
							Phenol-d5	200 ug/mL
..MB_L1S1_STK_00023	12/31/16		Restek, Lot A0111934		(Purchased Reagent)		1,1'-Biphenyl	1000 ug/mL
							1,2,4,5-Tetrachlorobenzene	1000 ug/mL
							1,2,4-Trichlorobenzene	1000 ug/mL
							1,2-Dichlorobenzene	1000 ug/mL
							1,2-Diphenylhydrazine	1000 ug/mL
							1,3-Dichlorobenzene	1000 ug/mL
							1,3-Dinitrobenzene	1000 ug/mL
							1,4-Dichlorobenzene	1000 ug/mL
							1,4-Dioxane	1000 ug/mL

REAGENT TRACEABILITY SUMMARY

Lab Name: TestAmerica Buffalo Job No.: 480-89467-1

SDG No.:

Reagent ID	Exp Date	Prep Date	Dilutant Used	Reagent Final Volume	Parent Reagent		Analyte	Concentration
					Reagent ID	Volume Added		
							1-Methylnaphthalene	1000 ug/mL
							2,2'-oxybis[1-chloropropane]	1000 ug/mL
							2,3,4,6-Tetrachlorophenol	1000 ug/mL
							2,4,5-Trichlorophenol	1000 ug/mL
							2,4,6-Trichlorophenol	1000 ug/mL
							2,4-Dichlorophenol	1000 ug/mL
							2,4-Dimethylphenol	1000 ug/mL
							2,4-Dinitrophenol	2000 ug/mL
							2,4-Dinitrotoluene	1000 ug/mL
							2,6-Dichlorophenol	1000 ug/mL
							2,6-Dinitrotoluene	1000 ug/mL
							2-Chloronaphthalene	1000 ug/mL
							2-Chlorophenol	1000 ug/mL
							2-Methylnaphthalene	1000 ug/mL
							2-Methylphenol	1000 ug/mL
							2-Nitroaniline	1000 ug/mL
							2-Nitrophenol	1000 ug/mL
							3-Nitroaniline	1000 ug/mL
							4,6-Dinitro-2-methylphenol	2000 ug/mL
							4-Bromophenyl phenyl ether	1000 ug/mL
							4-Chloro-3-methylphenol	1000 ug/mL
							4-Chloroaniline	1000 ug/mL
							4-Chlorophenyl phenyl ether	1000 ug/mL
							4-Methylphenol	1000 ug/mL
							4-Nitroaniline	1000 ug/mL
							4-Nitrophenol	2000 ug/mL
							Acenaphthene	1000 ug/mL
							Acenaphthylene	1000 ug/mL
							Acetophenone	1000 ug/mL
							Aniline	1000 ug/mL
							Anthracene	1000 ug/mL
							Azobenzene	1000 ug/mL
							Benzo[a]anthracene	1000 ug/mL
							Benzo[a]pyrene	1000 ug/mL
							Benzo[b]fluoranthene	1000 ug/mL
							Benzo[g,h,i]perylene	1000 ug/mL
							Benzo[k]fluoranthene	1000 ug/mL
							Benzyl alcohol	1000 ug/mL
							Bis(2-chloroethoxy)methane	1000 ug/mL
							Bis(2-chloroethyl)ether	1000 ug/mL
							Bis(2-ethylhexyl) phthalate	1000 ug/mL
							Butyl benzyl phthalate	1000 ug/mL
							Carbazole	1000 ug/mL
							Chrysene	1000 ug/mL
							Di-n-butyl phthalate	1000 ug/mL
							Di-n-octyl phthalate	1000 ug/mL
							Dibenz(a,h)anthracene	1000 ug/mL
							Dibenzofuran	1000 ug/mL

REAGENT TRACEABILITY SUMMARY

Lab Name: TestAmerica Buffalo Job No.: 480-89467-1

SDG No.:

Reagent ID	Exp Date	Prep Date	Dilutant Used	Reagent Final Volume	Parent Reagent		Analyte	Concentration
					Reagent ID	Volume Added		
							Diethyl phthalate	1000 ug/mL
							Dimethyl phthalate	1000 ug/mL
							Diphenylamine	1710 ug/mL
							Fluoranthene	1000 ug/mL
							Fluorene	1000 ug/mL
							Hexachlorobenzene	1000 ug/mL
							Hexachlorobutadiene	1000 ug/mL
							Hexachlorocyclopentadiene	1000 ug/mL
							Hexachloroethane	1000 ug/mL
							Hexadecane	1000 ug/mL
							Indeno[1,2,3-cd]pyrene	1000 ug/mL
							Isophorone	1000 ug/mL
							n-Decane	1000 ug/mL
							N-Nitrosodi-n-propylamine	1000 ug/mL
							N-Nitrosodimethylamine	1000 ug/mL
							N-Nitrosodiphenylamine	2000 ug/mL
							n-Octadecane	1000 ug/mL
							Naphthalene	1000 ug/mL
							Nitrobenzene	1000 ug/mL
							Pentachlorophenol	2000 ug/mL
							Phenanthrene	1000 ug/mL
							Phenol	1000 ug/mL
							Pyrene	1000 ug/mL
							Pyridine	1000 ug/mL
..MB_L1S10_STK_00002	08/31/16		Restek, Lot A0108988		(Purchased Reagent)		Benzoic acid	2000 ug/mL
							Indene	2000 ug/mL
..MB_L1S11_STK_00002	08/31/16		Rektek, Lot A0108989		(Purchased Reagent)		Atrazine	2000 ug/mL
							Benzaldehyde	2000 ug/mL
							Caprolactam	2000 ug/mL
..MB_L1S9_STK_00002	07/31/16		Restek, Lot A0110231		(Purchased Reagent)		3,3'-Dichlorobenzidine	2000 ug/mL
							Benzidine	2000 ug/mL
..MB_SURR_STK_00042	01/12/18		Restek, Lot A092712		(Purchased Reagent)		2,4,6-Tribromophenol	5000 ug/mL
							2-Fluorobiphenyl	5000 ug/mL
							2-Fluorophenol	5000 ug/mL
							Nitrobenzene-d5 (Surr)	5000 ug/mL
							p-Terphenyl-d14 (Surr)	5000 ug/mL
							Phenol-d5	5000 ug/mL
MB_L1LVI_WRK_00113	03/21/16	09/22/15	Methylene Chloride, Lot 118685	10 mL	MB_List1_INT_00021	500 uL	1,1'-Biphenyl	10 ug/mL
							1,2,4,5-Tetrachlorobenzene	10 ug/mL
							1,2,4-Trichlorobenzene	10 ug/mL
							1,2-Dichlorobenzene	10 ug/mL
							1,2-Diphenylhydrazine	10 ug/mL
							1,3-Dichlorobenzene	10 ug/mL
							1,3-Dinitrobenzene	10 ug/mL
							1,4-Dichlorobenzene	10 ug/mL
							1,4-Dioxane	10 ug/mL
							1-Methylnaphthalene	10 ug/mL

REAGENT TRACEABILITY SUMMARY

Lab Name: TestAmerica Buffalo Job No.: 480-89467-1

SDG No.:

Reagent ID	Exp Date	Prep Date	Dilutant Used	Reagent Final Volume	Parent Reagent		Analyte	Concentration
					Reagent ID	Volume Added		
							2,2'-oxybis[1-chloropropane]	10 ug/mL
							2,3,4,6-Tetrachlorophenol	10 ug/mL
							2,4,5-Trichlorophenol	10 ug/mL
							2,4,6-Trichlorophenol	10 ug/mL
							2,4-Dichlorophenol	10 ug/mL
							2,4-Dimethylphenol	10 ug/mL
							2,4-Dinitrophenol	20 ug/mL
							2,4-Dinitrotoluene	10 ug/mL
							2,6-Dichlorophenol	10 ug/mL
							2,6-Dinitrotoluene	10 ug/mL
							2-Chloronaphthalene	10 ug/mL
							2-Chlorophenol	10 ug/mL
							2-Methylnaphthalene	10 ug/mL
							2-Methylphenol	10 ug/mL
							2-Nitroaniline	10 ug/mL
							2-Nitrophenol	10 ug/mL
							3-Nitroaniline	10 ug/mL
							4,6-Dinitro-2-methylphenol	20 ug/mL
							4-Bromophenyl phenyl ether	10 ug/mL
							4-Chloro-3-methylphenol	10 ug/mL
							4-Chloroaniline	10 ug/mL
							4-Chlorophenyl phenyl ether	10 ug/mL
							4-Methylphenol	10 ug/mL
							4-Nitroaniline	10 ug/mL
							4-Nitrophenol	20 ug/mL
							Acenaphthene	10 ug/mL
							Acenaphthylene	10 ug/mL
							Acetophenone	10 ug/mL
							Aniline	10 ug/mL
							Anthracene	10 ug/mL
							Azobenzene	10 ug/mL
							Benzo[a]anthracene	10 ug/mL
							Benzo[a]pyrene	10 ug/mL
							Benzo[b]fluoranthene	10 ug/mL
							Benzo[g,h,i]perylene	10 ug/mL
							Benzo[k]fluoranthene	10 ug/mL
							Benzyl alcohol	10 ug/mL
							Bis(2-chloroethoxy)methane	10 ug/mL
							Bis(2-chloroethyl)ether	10 ug/mL
							Bis(2-ethylhexyl) phthalate	10 ug/mL
							Butyl benzyl phthalate	10 ug/mL
							Carbazole	10 ug/mL
							Chrysene	10 ug/mL
							Di-n-butyl phthalate	10 ug/mL
							Di-n-octyl phthalate	10 ug/mL
							Dibenz(a,h)anthracene	10 ug/mL
							Dibenzofuran	10 ug/mL
							Diethyl phthalate	10 ug/mL

REAGENT TRACEABILITY SUMMARY

Lab Name: TestAmerica Buffalo Job No.: 480-89467-1

SDG No.:

Reagent ID	Exp Date	Prep Date	Dilutant Used	Reagent Final Volume	Parent Reagent		Analyte	Concentration
					Reagent ID	Volume Added		
							Dimethyl phthalate	10 ug/mL
							Diphenylamine	17.1 ug/mL
							Fluoranthene	10 ug/mL
							Fluorene	10 ug/mL
							Hexachlorobenzene	10 ug/mL
							Hexachlorobutadiene	10 ug/mL
							Hexachlorocyclopentadiene	10 ug/mL
							Hexachloroethane	10 ug/mL
							Hexadecane	10 ug/mL
							Indeno[1,2,3-cd]pyrene	10 ug/mL
							Isophorone	10 ug/mL
							n-Decane	10 ug/mL
							N-Nitrosodi-n-propylamine	10 ug/mL
							N-Nitrosodimethylamine	10 ug/mL
							N-Nitrosodiphenylamine	20 ug/mL
							n-Octadecane	10 ug/mL
							Naphthalene	10 ug/mL
							Nitrobenzene	10 ug/mL
							Pentachlorophenol	20 ug/mL
							Phenanthrene	10 ug/mL
							Phenol	10 ug/mL
							Pyrene	10 ug/mL
							Pyridine	10 ug/mL
							Benzoic acid	10 ug/mL
							Indene	10 ug/mL
							Atrazine	10 ug/mL
							Benzaldehyde	10 ug/mL
							Caprolactam	10 ug/mL
							3,3'-Dichlorobenzidine	10 ug/mL
							Benzidine	10 ug/mL
							2,4,6-Tribromophenol	10 ug/mL
							2-Fluorobiphenyl	10 ug/mL
							2-Fluorophenol	10 ug/mL
							Nitrobenzene-d5 (Surr)	10 ug/mL
							p-Terphenyl-d14 (Surr)	10 ug/mL
							Phenol-d5	10 ug/mL
.MB_List1_INT_00021	07/31/16	09/21/15	Methylene Chloride, Lot 118685	10 mL	MB_L1S1_STK_00023	2000 uL	1,1'-Biphenyl	200 ug/mL
							1,2,4,5-Tetrachlorobenzene	200 ug/mL
							1,2,4-Trichlorobenzene	200 ug/mL
							1,2-Dichlorobenzene	200 ug/mL
							1,2-Diphenylhydrazine	200 ug/mL
							1,3-Dichlorobenzene	200 ug/mL
							1,3-Dinitrobenzene	200 ug/mL
							1,4-Dichlorobenzene	200 ug/mL
							1,4-Dioxane	200 ug/mL
							1-Methylnaphthalene	200 ug/mL
							2,2'-oxybis[1-chloropropane]	200 ug/mL

REAGENT TRACEABILITY SUMMARY

Lab Name: TestAmerica Buffalo Job No.: 480-89467-1

SDG No.:

Reagent ID	Exp Date	Prep Date	Dilutant Used	Reagent Final Volume	Parent Reagent		Analyte	Concentration
					Reagent ID	Volume Added		
							2,3,4,6-Tetrachlorophenol	200 ug/mL
							2,4,5-Trichlorophenol	200 ug/mL
							2,4,6-Trichlorophenol	200 ug/mL
							2,4-Dichlorophenol	200 ug/mL
							2,4-Dimethylphenol	200 ug/mL
							2,4-Dinitrophenol	400 ug/mL
							2,4-Dinitrotoluene	200 ug/mL
							2,6-Dichlorophenol	200 ug/mL
							2,6-Dinitrotoluene	200 ug/mL
							2-Chloronaphthalene	200 ug/mL
							2-Chlorophenol	200 ug/mL
							2-Methylnaphthalene	200 ug/mL
							2-Methylphenol	200 ug/mL
							2-Nitroaniline	200 ug/mL
							2-Nitrophenol	200 ug/mL
							3-Nitroaniline	200 ug/mL
							4,6-Dinitro-2-methylphenol	400 ug/mL
							4-Bromophenyl phenyl ether	200 ug/mL
							4-Chloro-3-methylphenol	200 ug/mL
							4-Chloroaniline	200 ug/mL
							4-Chlorophenyl phenyl ether	200 ug/mL
							4-Methylphenol	200 ug/mL
							4-Nitroaniline	200 ug/mL
							4-Nitrophenol	400 ug/mL
							Acenaphthene	200 ug/mL
							Acenaphthylene	200 ug/mL
							Acetophenone	200 ug/mL
							Aniline	200 ug/mL
							Anthracene	200 ug/mL
							Azobenzene	200 ug/mL
							Benzo[a]anthracene	200 ug/mL
							Benzo[a]pyrene	200 ug/mL
							Benzo[b]fluoranthene	200 ug/mL
							Benzo[g,h,i]perylene	200 ug/mL
							Benzo[k]fluoranthene	200 ug/mL
							Benzyl alcohol	200 ug/mL
							Bis(2-chloroethoxy)methane	200 ug/mL
							Bis(2-chloroethyl)ether	200 ug/mL
							Bis(2-ethylhexyl) phthalate	200 ug/mL
							Butyl benzyl phthalate	200 ug/mL
							Carbazole	200 ug/mL
							Chrysene	200 ug/mL
							Di-n-butyl phthalate	200 ug/mL
							Di-n-octyl phthalate	200 ug/mL
							Dibenz(a,h)anthracene	200 ug/mL
							Dibenzofuran	200 ug/mL
							Diethyl phthalate	200 ug/mL
							Dimethyl phthalate	200 ug/mL

REAGENT TRACEABILITY SUMMARY

Lab Name: TestAmerica Buffalo Job No.: 480-89467-1

SDG No.:

Reagent ID	Exp Date	Prep Date	Dilutant Used	Reagent Final Volume	Parent Reagent		Analyte	Concentration
					Reagent ID	Volume Added		
							Diphenylamine	342 ug/mL
							Fluoranthene	200 ug/mL
							Fluorene	200 ug/mL
							Hexachlorobenzene	200 ug/mL
							Hexachlorobutadiene	200 ug/mL
							Hexachlorocyclopentadiene	200 ug/mL
							Hexachloroethane	200 ug/mL
							Hexadecane	200 ug/mL
							Indeno[1,2,3-cd]pyrene	200 ug/mL
							Isophorone	200 ug/mL
							n-Decane	200 ug/mL
							N-Nitrosodi-n-propylamine	200 ug/mL
							N-Nitrosodimethylamine	200 ug/mL
							N-Nitrosodiphenylamine	400 ug/mL
							n-Octadecane	200 ug/mL
							Naphthalene	200 ug/mL
							Nitrobenzene	200 ug/mL
							Pentachlorophenol	400 ug/mL
							Phenanthrene	200 ug/mL
							Phenol	200 ug/mL
							Pyrene	200 ug/mL
							Pyridine	200 ug/mL
					MB_L1S10_STK_00002	1000 uL	Benzoic acid	200 ug/mL
							Indene	200 ug/mL
					MB_L1S11_STK_00002	1000 uL	Atrazine	200 ug/mL
							Benzaldehyde	200 ug/mL
							Caprolactam	200 ug/mL
					MB_L1S9_STK_00002	1000 uL	3,3'-Dichlorobenzidine	200 ug/mL
							Benzidine	200 ug/mL
					MB_SURR_STK_00042	400 uL	2,4,6-Tribromophenol	200 ug/mL
							2-Fluorobiphenyl	200 ug/mL
							2-Fluorophenol	200 ug/mL
							Nitrobenzene-d5 (Surr)	200 ug/mL
							p-Terphenyl-d14 (Surr)	200 ug/mL
							Phenol-d5	200 ug/mL
..MB_L1S1_STK_00023	12/31/16		Restek, Lot A0111934		(Purchased Reagent)		1,1'-Biphenyl	1000 ug/mL
							1,2,4,5-Tetrachlorobenzene	1000 ug/mL
							1,2,4-Trichlorobenzene	1000 ug/mL
							1,2-Dichlorobenzene	1000 ug/mL
							1,2-Diphenylhydrazine	1000 ug/mL
							1,3-Dichlorobenzene	1000 ug/mL
							1,3-Dinitrobenzene	1000 ug/mL
							1,4-Dichlorobenzene	1000 ug/mL
							1,4-Dioxane	1000 ug/mL
							1-Methylnaphthalene	1000 ug/mL
							2,2'-oxybis[1-chloropropane]	1000 ug/mL
							2,3,4,6-Tetrachlorophenol	1000 ug/mL
							2,4,5-Trichlorophenol	1000 ug/mL

REAGENT TRACEABILITY SUMMARY

Lab Name: TestAmerica Buffalo Job No.: 480-89467-1

SDG No.:

Reagent ID	Exp Date	Prep Date	Dilutant Used	Reagent Final Volume	Parent Reagent		Analyte	Concentration
					Reagent ID	Volume Added		
							2,4,6-Trichlorophenol	1000 ug/mL
							2,4-Dichlorophenol	1000 ug/mL
							2,4-Dimethylphenol	1000 ug/mL
							2,4-Dinitrophenol	2000 ug/mL
							2,4-Dinitrotoluene	1000 ug/mL
							2,6-Dichlorophenol	1000 ug/mL
							2,6-Dinitrotoluene	1000 ug/mL
							2-Chloronaphthalene	1000 ug/mL
							2-Chlorophenol	1000 ug/mL
							2-Methylnaphthalene	1000 ug/mL
							2-Methylphenol	1000 ug/mL
							2-Nitroaniline	1000 ug/mL
							2-Nitrophenol	1000 ug/mL
							3-Nitroaniline	1000 ug/mL
							4,6-Dinitro-2-methylphenol	2000 ug/mL
							4-Bromophenyl phenyl ether	1000 ug/mL
							4-Chloro-3-methylphenol	1000 ug/mL
							4-Chloroaniline	1000 ug/mL
							4-Chlorophenyl phenyl ether	1000 ug/mL
							4-Methylphenol	1000 ug/mL
							4-Nitroaniline	1000 ug/mL
							4-Nitrophenol	2000 ug/mL
							Acenaphthene	1000 ug/mL
							Acenaphthylene	1000 ug/mL
							Acetophenone	1000 ug/mL
							Aniline	1000 ug/mL
							Anthracene	1000 ug/mL
							Azobenzene	1000 ug/mL
							Benzo[a]anthracene	1000 ug/mL
							Benzo[a]pyrene	1000 ug/mL
							Benzo[b]fluoranthene	1000 ug/mL
							Benzo[g,h,i]perylene	1000 ug/mL
							Benzo[k]fluoranthene	1000 ug/mL
							Benzyl alcohol	1000 ug/mL
							Bis(2-chloroethoxy)methane	1000 ug/mL
							Bis(2-chloroethyl)ether	1000 ug/mL
							Bis(2-ethylhexyl) phthalate	1000 ug/mL
							Butyl benzyl phthalate	1000 ug/mL
							Carbazole	1000 ug/mL
							Chrysene	1000 ug/mL
							Di-n-butyl phthalate	1000 ug/mL
							Di-n-octyl phthalate	1000 ug/mL
							Dibenz(a,h)anthracene	1000 ug/mL
							Dibenzofuran	1000 ug/mL
							Diethyl phthalate	1000 ug/mL
							Dimethyl phthalate	1000 ug/mL
							Diphenylamine	1710 ug/mL
							Fluoranthene	1000 ug/mL

REAGENT TRACEABILITY SUMMARY

Lab Name: TestAmerica Buffalo Job No.: 480-89467-1

SDG No.:

Reagent ID	Exp Date	Prep Date	Dilutant Used	Reagent Final Volume	Parent Reagent		Analyte	Concentration
					Reagent ID	Volume Added		
							Fluorene	1000 ug/mL
							Hexachlorobenzene	1000 ug/mL
							Hexachlorobutadiene	1000 ug/mL
							Hexachlorocyclopentadiene	1000 ug/mL
							Hexachloroethane	1000 ug/mL
							Hexadecane	1000 ug/mL
							Indeno[1,2,3-cd]pyrene	1000 ug/mL
							Isophorone	1000 ug/mL
							n-Decane	1000 ug/mL
							N-Nitrosodi-n-propylamine	1000 ug/mL
							N-Nitrosodimethylamine	1000 ug/mL
							N-Nitrosodiphenylamine	2000 ug/mL
							n-Octadecane	1000 ug/mL
							Naphthalene	1000 ug/mL
							Nitrobenzene	1000 ug/mL
							Pentachlorophenol	2000 ug/mL
							Phenanthrene	1000 ug/mL
							Phenol	1000 ug/mL
							Pyrene	1000 ug/mL
							Pyridine	1000 ug/mL
..MB_L1S10_STK_00002	08/31/16		Restek, Lot A0108988		(Purchased Reagent)		Benzoic acid	2000 ug/mL
							Indene	2000 ug/mL
..MB_L1S11_STK_00002	08/31/16		Rektek, Lot A0108989		(Purchased Reagent)		Atrazine	2000 ug/mL
							Benzaldehyde	2000 ug/mL
							Caprolactam	2000 ug/mL
..MB_L1S9_STK_00002	07/31/16		Restek, Lot A0110231		(Purchased Reagent)		3,3'-Dichlorobenzidine	2000 ug/mL
							Benzidine	2000 ug/mL
..MB_SURR_STK_00042	01/12/18		Restek, Lot A092712		(Purchased Reagent)		2,4,6-Tribromophenol	5000 ug/mL
							2-Fluorobiphenyl	5000 ug/mL
							2-Fluorophenol	5000 ug/mL
							Nitrobenzene-d5 (Surr)	5000 ug/mL
							p-Terphenyl-d14 (Surr)	5000 ug/mL
							Phenol-d5	5000 ug/mL
MB_L1LVI_WRK_00114	03/21/16	09/22/15	Methylene Chloride, Lot 118685	10 mL	MB_List1_INT_00021	600 uL	1,1'-Biphenyl	12 ug/mL
							1,2,4,5-Tetrachlorobenzene	12 ug/mL
							1,2,4-Trichlorobenzene	12 ug/mL
							1,2-Dichlorobenzene	12 ug/mL
							1,2-Diphenylhydrazine	12 ug/mL
							1,3-Dichlorobenzene	12 ug/mL
							1,3-Dinitrobenzene	12 ug/mL
							1,4-Dichlorobenzene	12 ug/mL
							1,4-Dioxane	12 ug/mL
							1-Methylnaphthalene	12 ug/mL
							2,2'-oxybis[1-chloropropane]	12 ug/mL
							2,3,4,6-Tetrachlorophenol	12 ug/mL
							2,4,5-Trichlorophenol	12 ug/mL
							2,4,6-Trichlorophenol	12 ug/mL

REAGENT TRACEABILITY SUMMARY

Lab Name: TestAmerica Buffalo Job No.: 480-89467-1

SDG No.:

Reagent ID	Exp Date	Prep Date	Dilutant Used	Reagent Final Volume	Parent Reagent		Analyte	Concentration
					Reagent ID	Volume Added		
							2,4-Dichlorophenol	12 ug/mL
							2,4-Dimethylphenol	12 ug/mL
							2,4-Dinitrophenol	24 ug/mL
							2,4-Dinitrotoluene	12 ug/mL
							2,6-Dichlorophenol	12 ug/mL
							2,6-Dinitrotoluene	12 ug/mL
							2-Chloronaphthalene	12 ug/mL
							2-Chlorophenol	12 ug/mL
							2-Methylnaphthalene	12 ug/mL
							2-Methylphenol	12 ug/mL
							2-Nitroaniline	12 ug/mL
							2-Nitrophenol	12 ug/mL
							3-Nitroaniline	12 ug/mL
							4,6-Dinitro-2-methylphenol	24 ug/mL
							4-Bromophenyl phenyl ether	12 ug/mL
							4-Chloro-3-methylphenol	12 ug/mL
							4-Chloroaniline	12 ug/mL
							4-Chlorophenyl phenyl ether	12 ug/mL
							4-Methylphenol	12 ug/mL
							4-Nitroaniline	12 ug/mL
							4-Nitrophenol	24 ug/mL
							Acenaphthene	12 ug/mL
							Acenaphthylene	12 ug/mL
							Acetophenone	12 ug/mL
							Aniline	12 ug/mL
							Anthracene	12 ug/mL
							Azobenzene	12 ug/mL
							Benzo[a]anthracene	12 ug/mL
							Benzo[a]pyrene	12 ug/mL
							Benzo[b]fluoranthene	12 ug/mL
							Benzo[g,h,i]perylene	12 ug/mL
							Benzo[k]fluoranthene	12 ug/mL
							Benzyl alcohol	12 ug/mL
							Bis(2-chloroethoxy)methane	12 ug/mL
							Bis(2-chloroethyl)ether	12 ug/mL
							Bis(2-ethylhexyl) phthalate	12 ug/mL
							Butyl benzyl phthalate	12 ug/mL
							Carbazole	12 ug/mL
							Chrysene	12 ug/mL
							Di-n-butyl phthalate	12 ug/mL
							Di-n-octyl phthalate	12 ug/mL
							Dibenz(a,h)anthracene	12 ug/mL
							Dibenzofuran	12 ug/mL
							Diethyl phthalate	12 ug/mL
							Dimethyl phthalate	12 ug/mL
							Diphenylamine	20.52 ug/mL
							Fluoranthene	12 ug/mL
							Fluorene	12 ug/mL

REAGENT TRACEABILITY SUMMARY

Lab Name: TestAmerica Buffalo Job No.: 480-89467-1

SDG No.:

Reagent ID	Exp Date	Prep Date	Dilutant Used	Reagent Final Volume	Parent Reagent		Analyte	Concentration
					Reagent ID	Volume Added		
							Hexachlorobenzene	12 ug/mL
							Hexachlorobutadiene	12 ug/mL
							Hexachlorocyclopentadiene	12 ug/mL
							Hexachloroethane	12 ug/mL
							Hexadecane	12 ug/mL
							Indeno[1,2,3-cd]pyrene	12 ug/mL
							Isophorone	12 ug/mL
							n-Decane	12 ug/mL
							N-Nitrosodi-n-propylamine	12 ug/mL
							N-Nitrosodimethylamine	12 ug/mL
							N-Nitrosodiphenylamine	24 ug/mL
							n-Octadecane	12 ug/mL
							Naphthalene	12 ug/mL
							Nitrobenzene	12 ug/mL
							Pentachlorophenol	24 ug/mL
							Phenanthrene	12 ug/mL
							Phenol	12 ug/mL
							Pyrene	12 ug/mL
							Pyridine	12 ug/mL
							Benzoic acid	12 ug/mL
							Indene	12 ug/mL
							Atrazine	12 ug/mL
							Benzaldehyde	12 ug/mL
							Caprolactam	12 ug/mL
							3,3'-Dichlorobenzidine	12 ug/mL
							Benzidine	12 ug/mL
							2,4,6-Tribromophenol	12 ug/mL
							2-Fluorobiphenyl	12 ug/mL
							2-Fluorophenol	12 ug/mL
							Nitrobenzene-d5 (Surr)	12 ug/mL
							p-Terphenyl-d14 (Surr)	12 ug/mL
							Phenol-d5	12 ug/mL
.MB_List1_INT_00021	07/31/16	09/21/15	Methylene Chloride, Lot 118685	10 mL	MB_L1S1_STK_00023	2000 uL	1,1'-Biphenyl	200 ug/mL
							1,2,4,5-Tetrachlorobenzene	200 ug/mL
							1,2,4-Trichlorobenzene	200 ug/mL
							1,2-Dichlorobenzene	200 ug/mL
							1,2-Diphenylhydrazine	200 ug/mL
							1,3-Dichlorobenzene	200 ug/mL
							1,3-Dinitrobenzene	200 ug/mL
							1,4-Dichlorobenzene	200 ug/mL
							1,4-Dioxane	200 ug/mL
							1-Methylnaphthalene	200 ug/mL
							2,2'-oxybis[1-chloropropane]	200 ug/mL
							2,3,4,6-Tetrachlorophenol	200 ug/mL
							2,4,5-Trichlorophenol	200 ug/mL
							2,4,6-Trichlorophenol	200 ug/mL
							2,4-Dichlorophenol	200 ug/mL

REAGENT TRACEABILITY SUMMARY

Lab Name: TestAmerica Buffalo Job No.: 480-89467-1

SDG No.:

Reagent ID	Exp Date	Prep Date	Dilutant Used	Reagent Final Volume	Parent Reagent		Analyte	Concentration
					Reagent ID	Volume Added		
							2,4-Dimethylphenol	200 ug/mL
							2,4-Dinitrophenol	400 ug/mL
							2,4-Dinitrotoluene	200 ug/mL
							2,6-Dichlorophenol	200 ug/mL
							2,6-Dinitrotoluene	200 ug/mL
							2-Chloronaphthalene	200 ug/mL
							2-Chlorophenol	200 ug/mL
							2-Methylnaphthalene	200 ug/mL
							2-Methylphenol	200 ug/mL
							2-Nitroaniline	200 ug/mL
							2-Nitrophenol	200 ug/mL
							3-Nitroaniline	200 ug/mL
							4,6-Dinitro-2-methylphenol	400 ug/mL
							4-Bromophenyl phenyl ether	200 ug/mL
							4-Chloro-3-methylphenol	200 ug/mL
							4-Chloroaniline	200 ug/mL
							4-Chlorophenyl phenyl ether	200 ug/mL
							4-Methylphenol	200 ug/mL
							4-Nitroaniline	200 ug/mL
							4-Nitrophenol	400 ug/mL
							Acenaphthene	200 ug/mL
							Acenaphthylene	200 ug/mL
							Acetophenone	200 ug/mL
							Aniline	200 ug/mL
							Anthracene	200 ug/mL
							Azobenzene	200 ug/mL
							Benzo[a]anthracene	200 ug/mL
							Benzo[a]pyrene	200 ug/mL
							Benzo[b]fluoranthene	200 ug/mL
							Benzo[g,h,i]perylene	200 ug/mL
							Benzo[k]fluoranthene	200 ug/mL
							Benzyl alcohol	200 ug/mL
							Bis(2-chloroethoxy)methane	200 ug/mL
							Bis(2-chloroethyl)ether	200 ug/mL
							Bis(2-ethylhexyl) phthalate	200 ug/mL
							Butyl benzyl phthalate	200 ug/mL
							Carbazole	200 ug/mL
							Chrysene	200 ug/mL
							Di-n-butyl phthalate	200 ug/mL
							Di-n-octyl phthalate	200 ug/mL
							Dibenz(a,h)anthracene	200 ug/mL
							Dibenzofuran	200 ug/mL
							Diethyl phthalate	200 ug/mL
							Dimethyl phthalate	200 ug/mL
							Diphenylamine	342 ug/mL
							Fluoranthene	200 ug/mL
							Fluorene	200 ug/mL
							Hexachlorobenzene	200 ug/mL

REAGENT TRACEABILITY SUMMARY

Lab Name: TestAmerica Buffalo Job No.: 480-89467-1

SDG No.:

Reagent ID	Exp Date	Prep Date	Dilutant Used	Reagent Final Volume	Parent Reagent		Analyte	Concentration
					Reagent ID	Volume Added		
							Hexachlorobutadiene	200 ug/mL
							Hexachlorocyclopentadiene	200 ug/mL
							Hexachloroethane	200 ug/mL
							Hexadecane	200 ug/mL
							Indeno[1,2,3-cd]pyrene	200 ug/mL
							Isophorone	200 ug/mL
							n-Decane	200 ug/mL
							N-Nitrosodi-n-propylamine	200 ug/mL
							N-Nitrosodimethylamine	200 ug/mL
							N-Nitrosodiphenylamine	400 ug/mL
							n-Octadecane	200 ug/mL
							Naphthalene	200 ug/mL
							Nitrobenzene	200 ug/mL
							Pentachlorophenol	400 ug/mL
							Phenanthrene	200 ug/mL
							Phenol	200 ug/mL
							Pyrene	200 ug/mL
							Pyridine	200 ug/mL
					MB_L1S10_STK_00002	1000 uL	Benzoic acid	200 ug/mL
							Indene	200 ug/mL
					MB_L1S11_STK_00002	1000 uL	Atrazine	200 ug/mL
							Benzaldehyde	200 ug/mL
							Caprolactam	200 ug/mL
					MB_L1S9_STK_00002	1000 uL	3,3'-Dichlorobenzidine	200 ug/mL
							Benzidine	200 ug/mL
					MB_SURR_STK_00042	400 uL	2,4,6-Tribromophenol	200 ug/mL
							2-Fluorobiphenyl	200 ug/mL
							2-Fluorophenol	200 ug/mL
							Nitrobenzene-d5 (Surr)	200 ug/mL
							p-Terphenyl-d14 (Surr)	200 ug/mL
							Phenol-d5	200 ug/mL
..MB_L1S1_STK_00023	12/31/16		Restek, Lot A0111934		(Purchased Reagent)		1,1'-Biphenyl	1000 ug/mL
							1,2,4,5-Tetrachlorobenzene	1000 ug/mL
							1,2,4-Trichlorobenzene	1000 ug/mL
							1,2-Dichlorobenzene	1000 ug/mL
							1,2-Diphenylhydrazine	1000 ug/mL
							1,3-Dichlorobenzene	1000 ug/mL
							1,3-Dinitrobenzene	1000 ug/mL
							1,4-Dichlorobenzene	1000 ug/mL
							1,4-Dioxane	1000 ug/mL
							1-Methylnaphthalene	1000 ug/mL
							2,2'-oxybis[1-chloropropane]	1000 ug/mL
							2,3,4,6-Tetrachlorophenol	1000 ug/mL
							2,4,5-Trichlorophenol	1000 ug/mL
							2,4,6-Trichlorophenol	1000 ug/mL
							2,4-Dichlorophenol	1000 ug/mL
							2,4-Dimethylphenol	1000 ug/mL
							2,4-Dinitrophenol	2000 ug/mL

REAGENT TRACEABILITY SUMMARY

Lab Name: TestAmerica Buffalo Job No.: 480-89467-1

SDG No.:

Reagent ID	Exp Date	Prep Date	Dilutant Used	Reagent Final Volume	Parent Reagent		Analyte	Concentration
					Reagent ID	Volume Added		
							2,4-Dinitrotoluene	1000 ug/mL
							2,6-Dichlorophenol	1000 ug/mL
							2,6-Dinitrotoluene	1000 ug/mL
							2-Chloronaphthalene	1000 ug/mL
							2-Chlorophenol	1000 ug/mL
							2-Methylnaphthalene	1000 ug/mL
							2-Methylphenol	1000 ug/mL
							2-Nitroaniline	1000 ug/mL
							2-Nitrophenol	1000 ug/mL
							3-Nitroaniline	1000 ug/mL
							4,6-Dinitro-2-methylphenol	2000 ug/mL
							4-Bromophenyl phenyl ether	1000 ug/mL
							4-Chloro-3-methylphenol	1000 ug/mL
							4-Chloroaniline	1000 ug/mL
							4-Chlorophenyl phenyl ether	1000 ug/mL
							4-Methylphenol	1000 ug/mL
							4-Nitroaniline	1000 ug/mL
							4-Nitrophenol	2000 ug/mL
							Acenaphthene	1000 ug/mL
							Acenaphthylene	1000 ug/mL
							Acetophenone	1000 ug/mL
							Aniline	1000 ug/mL
							Anthracene	1000 ug/mL
							Azobenzene	1000 ug/mL
							Benzo[a]anthracene	1000 ug/mL
							Benzo[a]pyrene	1000 ug/mL
							Benzo[b]fluoranthene	1000 ug/mL
							Benzo[g,h,i]perylene	1000 ug/mL
							Benzo[k]fluoranthene	1000 ug/mL
							Benzyl alcohol	1000 ug/mL
							Bis(2-chloroethoxy)methane	1000 ug/mL
							Bis(2-chloroethyl)ether	1000 ug/mL
							Bis(2-ethylhexyl) phthalate	1000 ug/mL
							Butyl benzyl phthalate	1000 ug/mL
							Carbazole	1000 ug/mL
							Chrysene	1000 ug/mL
							Di-n-butyl phthalate	1000 ug/mL
							Di-n-octyl phthalate	1000 ug/mL
							Dibenz(a,h)anthracene	1000 ug/mL
							Dibenzofuran	1000 ug/mL
							Diethyl phthalate	1000 ug/mL
							Dimethyl phthalate	1000 ug/mL
							Diphenylamine	1710 ug/mL
							Fluoranthene	1000 ug/mL
							Fluorene	1000 ug/mL
							Hexachlorobenzene	1000 ug/mL
							Hexachlorobutadiene	1000 ug/mL
							Hexachlorocyclopentadiene	1000 ug/mL

REAGENT TRACEABILITY SUMMARY

Lab Name: TestAmerica Buffalo Job No.: 480-89467-1

SDG No.:

Reagent ID	Exp Date	Prep Date	Dilutant Used	Reagent Final Volume	Parent Reagent		Analyte	Concentration
					Reagent ID	Volume Added		
							Hexachloroethane	1000 ug/mL
							Hexadecane	1000 ug/mL
							Indeno[1,2,3-cd]pyrene	1000 ug/mL
							Isophorone	1000 ug/mL
							n-Decane	1000 ug/mL
							N-Nitrosodi-n-propylamine	1000 ug/mL
							N-Nitrosodimethylamine	1000 ug/mL
							N-Nitrosodiphenylamine	2000 ug/mL
							n-Octadecane	1000 ug/mL
							Naphthalene	1000 ug/mL
							Nitrobenzene	1000 ug/mL
							Pentachlorophenol	2000 ug/mL
							Phenanthrene	1000 ug/mL
							Phenol	1000 ug/mL
							Pyrene	1000 ug/mL
							Pyridine	1000 ug/mL
..MB_L1S10_STK_00002	08/31/16		Restek, Lot A0108988		(Purchased Reagent)		Benzoic acid	2000 ug/mL
							Indene	2000 ug/mL
..MB_L1S11_STK_00002	08/31/16		Rektek, Lot A0108989		(Purchased Reagent)		Atrazine	2000 ug/mL
							Benzaldehyde	2000 ug/mL
							Caprolactam	2000 ug/mL
..MB_L1S9_STK_00002	07/31/16		Restek, Lot A0110231		(Purchased Reagent)		3,3'-Dichlorobenzidine	2000 ug/mL
							Benzidine	2000 ug/mL
..MB_SURR_STK_00042	01/12/18		Restek, Lot A092712		(Purchased Reagent)		2,4,6-Tribromophenol	5000 ug/mL
							2-Fluorobiphenyl	5000 ug/mL
							2-Fluorophenol	5000 ug/mL
							Nitrobenzene-d5 (Surr)	5000 ug/mL
							p-Terphenyl-d14 (Surr)	5000 ug/mL
							Phenol-d5	5000 ug/mL
MB_L1LVI_WRK_00115	03/21/16	10/07/15	Methylene Chloride, Lot 118685	10 mL	MB_List1_INT_00021	200 uL	1,1'-Biphenyl	4 ug/mL
							1,2,4,5-Tetrachlorobenzene	4 ug/mL
							1,2,4-Trichlorobenzene	4 ug/mL
							1,2-Dichlorobenzene	4 ug/mL
							1,2-Diphenylhydrazine	4 ug/mL
							1,3-Dichlorobenzene	4 ug/mL
							1,3-Dinitrobenzene	4 ug/mL
							1,4-Dichlorobenzene	4 ug/mL
							1,4-Dioxane	4 ug/mL
							1-Methylnaphthalene	4 ug/mL
							2,2'-oxybis[1-chloropropane]	4 ug/mL
							2,3,4,6-Tetrachlorophenol	4 ug/mL
							2,4,5-Trichlorophenol	4 ug/mL
							2,4,6-Trichlorophenol	4 ug/mL
							2,4-Dichlorophenol	4 ug/mL
							2,4-Dimethylphenol	4 ug/mL
							2,4-Dinitrophenol	8 ug/mL
							2,4-Dinitrotoluene	4 ug/mL

REAGENT TRACEABILITY SUMMARY

Lab Name: TestAmerica Buffalo Job No.: 480-89467-1

SDG No.:

Reagent ID	Exp Date	Prep Date	Dilutant Used	Reagent Final Volume	Parent Reagent		Analyte	Concentration
					Reagent ID	Volume Added		
							2,6-Dichlorophenol	4 ug/mL
							2,6-Dinitrotoluene	4 ug/mL
							2-Chloronaphthalene	4 ug/mL
							2-Chlorophenol	4 ug/mL
							2-Methylnaphthalene	4 ug/mL
							2-Methylphenol	4 ug/mL
							2-Nitroaniline	4 ug/mL
							2-Nitrophenol	4 ug/mL
							3-Nitroaniline	4 ug/mL
							4,6-Dinitro-2-methylphenol	8 ug/mL
							4-Bromophenyl phenyl ether	4 ug/mL
							4-Chloro-3-methylphenol	4 ug/mL
							4-Chloroaniline	4 ug/mL
							4-Chlorophenyl phenyl ether	4 ug/mL
							4-Methylphenol	4 ug/mL
							4-Nitroaniline	4 ug/mL
							4-Nitrophenol	8 ug/mL
							Acenaphthene	4 ug/mL
							Acenaphthylene	4 ug/mL
							Acetophenone	4 ug/mL
							Aniline	4 ug/mL
							Anthracene	4 ug/mL
							Azobenzene	4 ug/mL
							Benzo[a]anthracene	4 ug/mL
							Benzo[a]pyrene	4 ug/mL
							Benzo[b]fluoranthene	4 ug/mL
							Benzo[g,h,i]perylene	4 ug/mL
							Benzo[k]fluoranthene	4 ug/mL
							Benzyl alcohol	4 ug/mL
							Bis(2-chloroethoxy)methane	4 ug/mL
							Bis(2-chloroethyl)ether	4 ug/mL
							Bis(2-ethylhexyl) phthalate	4 ug/mL
							Butyl benzyl phthalate	4 ug/mL
							Carbazole	4 ug/mL
							Chrysene	4 ug/mL
							Di-n-butyl phthalate	4 ug/mL
							Di-n-octyl phthalate	4 ug/mL
							Dibenz(a,h)anthracene	4 ug/mL
							Dibenzofuran	4 ug/mL
							Diethyl phthalate	4 ug/mL
							Dimethyl phthalate	4 ug/mL
							Diphenylamine	6.84 ug/mL
							Fluoranthene	4 ug/mL
							Fluorene	4 ug/mL
							Hexachlorobenzene	4 ug/mL
							Hexachlorobutadiene	4 ug/mL
							Hexachlorocyclopentadiene	4 ug/mL
							Hexachloroethane	4 ug/mL

REAGENT TRACEABILITY SUMMARY

Lab Name: TestAmerica Buffalo Job No.: 480-89467-1

SDG No.:

Reagent ID	Exp Date	Prep Date	Dilutant Used	Reagent Final Volume	Parent Reagent		Analyte	Concentration
					Reagent ID	Volume Added		
							Hexadecane	4 ug/mL
							Indeno[1,2,3-cd]pyrene	4 ug/mL
							Isophorone	4 ug/mL
							n-Decane	4 ug/mL
							N-Nitrosodi-n-propylamine	4 ug/mL
							N-Nitrosodimethylamine	4 ug/mL
							N-Nitrosodiphenylamine	8 ug/mL
							n-Octadecane	4 ug/mL
							Naphthalene	4 ug/mL
							Nitrobenzene	4 ug/mL
							Pentachlorophenol	8 ug/mL
							Phenanthrene	4 ug/mL
							Phenol	4 ug/mL
							Pyrene	4 ug/mL
							Pyridine	4 ug/mL
							Benzoic acid	4 ug/mL
							Indene	4 ug/mL
							Atrazine	4 ug/mL
							Benzaldehyde	4 ug/mL
							Caprolactam	4 ug/mL
							3,3'-Dichlorobenzidine	4 ug/mL
							Benzidine	4 ug/mL
							2,4,6-Tribromophenol	4 ug/mL
							2-Fluorobiphenyl	4 ug/mL
							2-Fluorophenol	4 ug/mL
							Nitrobenzene-d5 (Surr)	4 ug/mL
							p-Terphenyl-d14 (Surr)	4 ug/mL
							Phenol-d5	4 ug/mL
.MB_List1_INT_00021	07/31/16	09/21/15	Methylene Chloride, Lot 118685	10 mL	MB_L1S1_STK_00023	2000 uL	1,1'-Biphenyl	200 ug/mL
							1,2,4,5-Tetrachlorobenzene	200 ug/mL
							1,2,4-Trichlorobenzene	200 ug/mL
							1,2-Dichlorobenzene	200 ug/mL
							1,2-Diphenylhydrazine	200 ug/mL
							1,3-Dichlorobenzene	200 ug/mL
							1,3-Dinitrobenzene	200 ug/mL
							1,4-Dichlorobenzene	200 ug/mL
							1,4-Dioxane	200 ug/mL
							1-Methylnaphthalene	200 ug/mL
							2,2'-oxybis[1-chloropropane]	200 ug/mL
							2,3,4,6-Tetrachlorophenol	200 ug/mL
							2,4,5-Trichlorophenol	200 ug/mL
							2,4,6-Trichlorophenol	200 ug/mL
							2,4-Dichlorophenol	200 ug/mL
							2,4-Dimethylphenol	200 ug/mL
							2,4-Dinitrophenol	400 ug/mL
							2,4-Dinitrotoluene	200 ug/mL
							2,6-Dichlorophenol	200 ug/mL

REAGENT TRACEABILITY SUMMARY

Lab Name: TestAmerica Buffalo Job No.: 480-89467-1

SDG No.:

Reagent ID	Exp Date	Prep Date	Dilutant Used	Reagent Final Volume	Parent Reagent		Analyte	Concentration
					Reagent ID	Volume Added		
							2,6-Dinitrotoluene	200 ug/mL
							2-Chloronaphthalene	200 ug/mL
							2-Chlorophenol	200 ug/mL
							2-Methylnaphthalene	200 ug/mL
							2-Methylphenol	200 ug/mL
							2-Nitroaniline	200 ug/mL
							2-Nitrophenol	200 ug/mL
							3-Nitroaniline	200 ug/mL
							4,6-Dinitro-2-methylphenol	400 ug/mL
							4-Bromophenyl phenyl ether	200 ug/mL
							4-Chloro-3-methylphenol	200 ug/mL
							4-Chloroaniline	200 ug/mL
							4-Chlorophenyl phenyl ether	200 ug/mL
							4-Methylphenol	200 ug/mL
							4-Nitroaniline	200 ug/mL
							4-Nitrophenol	400 ug/mL
							Acenaphthene	200 ug/mL
							Acenaphthylene	200 ug/mL
							Acetophenone	200 ug/mL
							Aniline	200 ug/mL
							Anthracene	200 ug/mL
							Azobenzene	200 ug/mL
							Benzo[a]anthracene	200 ug/mL
							Benzo[a]pyrene	200 ug/mL
							Benzo[b]fluoranthene	200 ug/mL
							Benzo[g,h,i]perylene	200 ug/mL
							Benzo[k]fluoranthene	200 ug/mL
							Benzyl alcohol	200 ug/mL
							Bis(2-chloroethoxy)methane	200 ug/mL
							Bis(2-chloroethyl)ether	200 ug/mL
							Bis(2-ethylhexyl) phthalate	200 ug/mL
							Butyl benzyl phthalate	200 ug/mL
							Carbazole	200 ug/mL
							Chrysene	200 ug/mL
							Di-n-butyl phthalate	200 ug/mL
							Di-n-octyl phthalate	200 ug/mL
							Dibenz(a,h)anthracene	200 ug/mL
							Dibenzofuran	200 ug/mL
							Diethyl phthalate	200 ug/mL
							Dimethyl phthalate	200 ug/mL
							Diphenylamine	342 ug/mL
							Fluoranthene	200 ug/mL
							Fluorene	200 ug/mL
							Hexachlorobenzene	200 ug/mL
							Hexachlorobutadiene	200 ug/mL
							Hexachlorocyclopentadiene	200 ug/mL
							Hexachloroethane	200 ug/mL
							Hexadecane	200 ug/mL

REAGENT TRACEABILITY SUMMARY

Lab Name: TestAmerica Buffalo Job No.: 480-89467-1

SDG No.:

Reagent ID	Exp Date	Prep Date	Dilutant Used	Reagent Final Volume	Parent Reagent		Analyte	Concentration
					Reagent ID	Volume Added		
							Indeno[1,2,3-cd]pyrene	200 ug/mL
							Isophorone	200 ug/mL
							n-Decane	200 ug/mL
							N-Nitrosodi-n-propylamine	200 ug/mL
							N-Nitrosodimethylamine	200 ug/mL
							N-Nitrosodiphenylamine	400 ug/mL
							n-Octadecane	200 ug/mL
							Naphthalene	200 ug/mL
							Nitrobenzene	200 ug/mL
							Pentachlorophenol	400 ug/mL
							Phenanthrene	200 ug/mL
							Phenol	200 ug/mL
							Pyrene	200 ug/mL
							Pyridine	200 ug/mL
					MB_L1S10_STK_00002	1000 uL	Benzoic acid	200 ug/mL
							Indene	200 ug/mL
					MB_L1S11_STK_00002	1000 uL	Atrazine	200 ug/mL
							Benzaldehyde	200 ug/mL
							Caprolactam	200 ug/mL
					MB_L1S9_STK_00002	1000 uL	3,3'-Dichlorobenzidine	200 ug/mL
							Benzidine	200 ug/mL
					MB_SURR_STK_00042	400 uL	2,4,6-Tribromophenol	200 ug/mL
							2-Fluorobiphenyl	200 ug/mL
							2-Fluorophenol	200 ug/mL
							Nitrobenzene-d5 (Surr)	200 ug/mL
							p-Terphenyl-d14 (Surr)	200 ug/mL
							Phenol-d5	200 ug/mL
..MB_L1S1_STK_00023	12/31/16		Restek, Lot A0111934		(Purchased Reagent)		1,1'-Biphenyl	1000 ug/mL
							1,2,4,5-Tetrachlorobenzene	1000 ug/mL
							1,2,4-Trichlorobenzene	1000 ug/mL
							1,2-Dichlorobenzene	1000 ug/mL
							1,2-Diphenylhydrazine	1000 ug/mL
							1,3-Dichlorobenzene	1000 ug/mL
							1,3-Dinitrobenzene	1000 ug/mL
							1,4-Dichlorobenzene	1000 ug/mL
							1,4-Dioxane	1000 ug/mL
							1-Methylnaphthalene	1000 ug/mL
							2,2'-oxybis[1-chloropropane]	1000 ug/mL
							2,3,4,6-Tetrachlorophenol	1000 ug/mL
							2,4,5-Trichlorophenol	1000 ug/mL
							2,4,6-Trichlorophenol	1000 ug/mL
							2,4-Dichlorophenol	1000 ug/mL
							2,4-Dimethylphenol	1000 ug/mL
							2,4-Dinitrophenol	2000 ug/mL
							2,4-Dinitrotoluene	1000 ug/mL
							2,6-Dichlorophenol	1000 ug/mL
							2,6-Dinitrotoluene	1000 ug/mL
							2-Chloronaphthalene	1000 ug/mL

REAGENT TRACEABILITY SUMMARY

Lab Name: TestAmerica Buffalo Job No.: 480-89467-1

SDG No.:

Reagent ID	Exp Date	Prep Date	Dilutant Used	Reagent Final Volume	Parent Reagent		Analyte	Concentration
					Reagent ID	Volume Added		
							2-Chlorophenol	1000 ug/mL
							2-Methylnaphthalene	1000 ug/mL
							2-Methylphenol	1000 ug/mL
							2-Nitroaniline	1000 ug/mL
							2-Nitrophenol	1000 ug/mL
							3-Nitroaniline	1000 ug/mL
							4,6-Dinitro-2-methylphenol	2000 ug/mL
							4-Bromophenyl phenyl ether	1000 ug/mL
							4-Chloro-3-methylphenol	1000 ug/mL
							4-Chloroaniline	1000 ug/mL
							4-Chlorophenyl phenyl ether	1000 ug/mL
							4-Methylphenol	1000 ug/mL
							4-Nitroaniline	1000 ug/mL
							4-Nitrophenol	2000 ug/mL
							Acenaphthene	1000 ug/mL
							Acenaphthylene	1000 ug/mL
							Acetophenone	1000 ug/mL
							Aniline	1000 ug/mL
							Anthracene	1000 ug/mL
							Azobenzene	1000 ug/mL
							Benzo[a]anthracene	1000 ug/mL
							Benzo[a]pyrene	1000 ug/mL
							Benzo[b]fluoranthene	1000 ug/mL
							Benzo[g,h,i]perylene	1000 ug/mL
							Benzo[k]fluoranthene	1000 ug/mL
							Benzyl alcohol	1000 ug/mL
							Bis(2-chloroethoxy)methane	1000 ug/mL
							Bis(2-chloroethyl)ether	1000 ug/mL
							Bis(2-ethylhexyl) phthalate	1000 ug/mL
							Butyl benzyl phthalate	1000 ug/mL
							Carbazole	1000 ug/mL
							Chrysene	1000 ug/mL
							Di-n-butyl phthalate	1000 ug/mL
							Di-n-octyl phthalate	1000 ug/mL
							Dibenz(a,h)anthracene	1000 ug/mL
							Dibenzofuran	1000 ug/mL
							Diethyl phthalate	1000 ug/mL
							Dimethyl phthalate	1000 ug/mL
							Diphenylamine	1710 ug/mL
							Fluoranthene	1000 ug/mL
							Fluorene	1000 ug/mL
							Hexachlorobenzene	1000 ug/mL
							Hexachlorobutadiene	1000 ug/mL
							Hexachlorocyclopentadiene	1000 ug/mL
							Hexachloroethane	1000 ug/mL
							Hexadecane	1000 ug/mL
							Indeno[1,2,3-cd]pyrene	1000 ug/mL
							Isophorone	1000 ug/mL

REAGENT TRACEABILITY SUMMARY

Lab Name: TestAmerica Buffalo Job No.: 480-89467-1

SDG No.:

Reagent ID	Exp Date	Prep Date	Dilutant Used	Reagent Final Volume	Parent Reagent		Analyte	Concentration
					Reagent ID	Volume Added		
							n-Decane	1000 ug/mL
							N-Nitrosodi-n-propylamine	1000 ug/mL
							N-Nitrosodimethylamine	1000 ug/mL
							N-Nitrosodiphenylamine	2000 ug/mL
							n-Octadecane	1000 ug/mL
							Naphthalene	1000 ug/mL
							Nitrobenzene	1000 ug/mL
							Pentachlorophenol	2000 ug/mL
							Phenanthrene	1000 ug/mL
							Phenol	1000 ug/mL
							Pyrene	1000 ug/mL
							Pyridine	1000 ug/mL
..MB_L1S10_STK_00002	08/31/16		Restek, Lot A0108988		(Purchased Reagent)		Benzoic acid	2000 ug/mL
							Indene	2000 ug/mL
..MB_L1S11_STK_00002	08/31/16		Rektek, Lot A0108989		(Purchased Reagent)		Atrazine	2000 ug/mL
							Benzaldehyde	2000 ug/mL
							Caprolactam	2000 ug/mL
..MB_L1S9_STK_00002	07/31/16		Restek, Lot A0110231		(Purchased Reagent)		3,3'-Dichlorobenzidine	2000 ug/mL
							Benzidine	2000 ug/mL
..MB_SURR_STK_00042	01/12/18		Restek, Lot A092712		(Purchased Reagent)		2,4,6-Tribromophenol	5000 ug/mL
							2-Fluorobiphenyl	5000 ug/mL
							2-Fluorophenol	5000 ug/mL
							Nitrobenzene-d5 (Surr)	5000 ug/mL
							p-Terphenyl-d14 (Surr)	5000 ug/mL
							Phenol-d5	5000 ug/mL
MB_L1LVI_WRK_00116	07/31/16	10/08/15	Methylene Chloride, Lot 121470	10 mL	MB_List1_INT_00021	50 uL	1,1'-Biphenyl	1 ug/mL
							1,2,4,5-Tetrachlorobenzene	1 ug/mL
							1,2,4-Trichlorobenzene	1 ug/mL
							1,2-Dichlorobenzene	1 ug/mL
							1,2-Diphenylhydrazine	1 ug/mL
							1,3-Dichlorobenzene	1 ug/mL
							1,3-Dinitrobenzene	1 ug/mL
							1,4-Dichlorobenzene	1 ug/mL
							1,4-Dioxane	1 ug/mL
							1-Methylnaphthalene	1 ug/mL
							2,2'-oxybis[1-chloropropane]	1 ug/mL
							2,3,4,6-Tetrachlorophenol	1 ug/mL
							2,4,5-Trichlorophenol	1 ug/mL
							2,4,6-Trichlorophenol	1 ug/mL
							2,4-Dichlorophenol	1 ug/mL
							2,4-Dimethylphenol	1 ug/mL
							2,4-Dinitrophenol	2 ug/mL
							2,4-Dinitrotoluene	1 ug/mL
							2,6-Dichlorophenol	1 ug/mL
							2,6-Dinitrotoluene	1 ug/mL
							2-Chloronaphthalene	1 ug/mL
							2-Chlorophenol	1 ug/mL

REAGENT TRACEABILITY SUMMARY

Lab Name: TestAmerica Buffalo Job No.: 480-89467-1

SDG No.:

Reagent ID	Exp Date	Prep Date	Dilutant Used	Reagent Final Volume	Parent Reagent		Analyte	Concentration
					Reagent ID	Volume Added		
							2-Methylnaphthalene	1 ug/mL
							2-Methylphenol	1 ug/mL
							2-Nitroaniline	1 ug/mL
							2-Nitrophenol	1 ug/mL
							3-Nitroaniline	1 ug/mL
							4,6-Dinitro-2-methylphenol	2 ug/mL
							4-Bromophenyl phenyl ether	1 ug/mL
							4-Chloro-3-methylphenol	1 ug/mL
							4-Chloroaniline	1 ug/mL
							4-Chlorophenyl phenyl ether	1 ug/mL
							4-Methylphenol	1 ug/mL
							4-Nitroaniline	1 ug/mL
							4-Nitrophenol	2 ug/mL
							Acenaphthene	1 ug/mL
							Acenaphthylene	1 ug/mL
							Acetophenone	1 ug/mL
							Aniline	1 ug/mL
							Anthracene	1 ug/mL
							Azobenzene	1 ug/mL
							Benzo[a]anthracene	1 ug/mL
							Benzo[a]pyrene	1 ug/mL
							Benzo[b]fluoranthene	1 ug/mL
							Benzo[g,h,i]perylene	1 ug/mL
							Benzo[k]fluoranthene	1 ug/mL
							Benzyl alcohol	1 ug/mL
							Bis(2-chloroethoxy)methane	1 ug/mL
							Bis(2-chloroethyl)ether	1 ug/mL
							Bis(2-ethylhexyl) phthalate	1 ug/mL
							Butyl benzyl phthalate	1 ug/mL
							Carbazole	1 ug/mL
							Chrysene	1 ug/mL
							Di-n-butyl phthalate	1 ug/mL
							Di-n-octyl phthalate	1 ug/mL
							Dibenz(a,h)anthracene	1 ug/mL
							Dibenzofuran	1 ug/mL
							Diethyl phthalate	1 ug/mL
							Dimethyl phthalate	1 ug/mL
							Diphenylamine	1.71 ug/mL
							Fluoranthene	1 ug/mL
							Fluorene	1 ug/mL
							Hexachlorobenzene	1 ug/mL
							Hexachlorobutadiene	1 ug/mL
							Hexachlorocyclopentadiene	1 ug/mL
							Hexachloroethane	1 ug/mL
							Hexadecane	1 ug/mL
							Indeno[1,2,3-cd]pyrene	1 ug/mL
							Isophorone	1 ug/mL
							n-Decane	1 ug/mL

REAGENT TRACEABILITY SUMMARY

Lab Name: TestAmerica Buffalo Job No.: 480-89467-1

SDG No.:

Reagent ID	Exp Date	Prep Date	Dilutant Used	Reagent Final Volume	Parent Reagent		Analyte	Concentration
					Reagent ID	Volume Added		
							N-Nitrosodi-n-propylamine	1 ug/mL
							N-Nitrosodimethylamine	1 ug/mL
							N-Nitrosodiphenylamine	2 ug/mL
							n-Octadecane	1 ug/mL
							Naphthalene	1 ug/mL
							Nitrobenzene	1 ug/mL
							Pentachlorophenol	2 ug/mL
							Phenanthrene	1 ug/mL
							Phenol	1 ug/mL
							Pyrene	1 ug/mL
							Pyridine	1 ug/mL
							Benzoic acid	1 ug/mL
							Indene	1 ug/mL
							Atrazine	1 ug/mL
							Benzaldehyde	1 ug/mL
							Caprolactam	1 ug/mL
							3,3'-Dichlorobenzidine	1 ug/mL
							Benzidine	1 ug/mL
							2,4,6-Tribromophenol	1 ug/mL
							2-Fluorobiphenyl	1 ug/mL
							2-Fluorophenol	1 ug/mL
							Nitrobenzene-d5 (Surr)	1 ug/mL
							p-Terphenyl-d14 (Surr)	1 ug/mL
							Phenol-d5	1 ug/mL
.MB_List1_INT_00021	07/31/16	09/21/15	Methylene Chloride, Lot 118685	10 mL	MB_L1S1_STK_00023	2000 uL	1,1'-Biphenyl	200 ug/mL
							1,2,4,5-Tetrachlorobenzene	200 ug/mL
							1,2,4-Trichlorobenzene	200 ug/mL
							1,2-Dichlorobenzene	200 ug/mL
							1,2-Diphenylhydrazine	200 ug/mL
							1,3-Dichlorobenzene	200 ug/mL
							1,3-Dinitrobenzene	200 ug/mL
							1,4-Dichlorobenzene	200 ug/mL
							1,4-Dioxane	200 ug/mL
							1-Methylnaphthalene	200 ug/mL
							2,2'-oxybis[1-chloropropane]	200 ug/mL
							2,3,4,6-Tetrachlorophenol	200 ug/mL
							2,4,5-Trichlorophenol	200 ug/mL
							2,4,6-Trichlorophenol	200 ug/mL
							2,4-Dichlorophenol	200 ug/mL
							2,4-Dimethylphenol	200 ug/mL
							2,4-Dinitrophenol	400 ug/mL
							2,4-Dinitrotoluene	200 ug/mL
							2,6-Dichlorophenol	200 ug/mL
							2,6-Dinitrotoluene	200 ug/mL
							2-Chloronaphthalene	200 ug/mL
							2-Chlorophenol	200 ug/mL
							2-Methylnaphthalene	200 ug/mL

REAGENT TRACEABILITY SUMMARY

Lab Name: TestAmerica Buffalo Job No.: 480-89467-1

SDG No.:

Reagent ID	Exp Date	Prep Date	Dilutant Used	Reagent Final Volume	Parent Reagent		Analyte	Concentration
					Reagent ID	Volume Added		
							2-Methylphenol	200 ug/mL
							2-Nitroaniline	200 ug/mL
							2-Nitrophenol	200 ug/mL
							3-Nitroaniline	200 ug/mL
							4,6-Dinitro-2-methylphenol	400 ug/mL
							4-Bromophenyl phenyl ether	200 ug/mL
							4-Chloro-3-methylphenol	200 ug/mL
							4-Chloroaniline	200 ug/mL
							4-Chlorophenyl phenyl ether	200 ug/mL
							4-Methylphenol	200 ug/mL
							4-Nitroaniline	200 ug/mL
							4-Nitrophenol	400 ug/mL
							Acenaphthene	200 ug/mL
							Acenaphthylene	200 ug/mL
							Acetophenone	200 ug/mL
							Aniline	200 ug/mL
							Anthracene	200 ug/mL
							Azobenzene	200 ug/mL
							Benzo[a]anthracene	200 ug/mL
							Benzo[a]pyrene	200 ug/mL
							Benzo[b]fluoranthene	200 ug/mL
							Benzo[g,h,i]perylene	200 ug/mL
							Benzo[k]fluoranthene	200 ug/mL
							Benzyl alcohol	200 ug/mL
							Bis(2-chloroethoxy)methane	200 ug/mL
							Bis(2-chloroethyl)ether	200 ug/mL
							Bis(2-ethylhexyl) phthalate	200 ug/mL
							Butyl benzyl phthalate	200 ug/mL
							Carbazole	200 ug/mL
							Chrysene	200 ug/mL
							Di-n-butyl phthalate	200 ug/mL
							Di-n-octyl phthalate	200 ug/mL
							Dibenz(a,h)anthracene	200 ug/mL
							Dibenzofuran	200 ug/mL
							Diethyl phthalate	200 ug/mL
							Dimethyl phthalate	200 ug/mL
							Diphenylamine	342 ug/mL
							Fluoranthene	200 ug/mL
							Fluorene	200 ug/mL
							Hexachlorobenzene	200 ug/mL
							Hexachlorobutadiene	200 ug/mL
							Hexachlorocyclopentadiene	200 ug/mL
							Hexachloroethane	200 ug/mL
							Hexadecane	200 ug/mL
							Indeno[1,2,3-cd]pyrene	200 ug/mL
							Isophorone	200 ug/mL
							n-Decane	200 ug/mL
							N-Nitrosodi-n-propylamine	200 ug/mL

REAGENT TRACEABILITY SUMMARY

Lab Name: TestAmerica Buffalo Job No.: 480-89467-1

SDG No.:

Reagent ID	Exp Date	Prep Date	Dilutant Used	Reagent Final Volume	Parent Reagent		Analyte	Concentration
					Reagent ID	Volume Added		
							N-Nitrosodimethylamine	200 ug/mL
							N-Nitrosodiphenylamine	400 ug/mL
							n-Octadecane	200 ug/mL
							Naphthalene	200 ug/mL
							Nitrobenzene	200 ug/mL
							Pentachlorophenol	400 ug/mL
							Phenanthrene	200 ug/mL
							Phenol	200 ug/mL
							Pyrene	200 ug/mL
							Pyridine	200 ug/mL
					MB_L1S10_STK_00002	1000 uL	Benzoic acid	200 ug/mL
							Indene	200 ug/mL
					MB_L1S11_STK_00002	1000 uL	Atrazine	200 ug/mL
							Benzaldehyde	200 ug/mL
							Caprolactam	200 ug/mL
					MB_L1S9_STK_00002	1000 uL	3,3'-Dichlorobenzidine	200 ug/mL
							Benzidine	200 ug/mL
					MB_SURR_STK_00042	400 uL	2,4,6-Tribromophenol	200 ug/mL
							2-Fluorobiphenyl	200 ug/mL
							2-Fluorophenol	200 ug/mL
							Nitrobenzene-d5 (Surr)	200 ug/mL
							p-Terphenyl-d14 (Surr)	200 ug/mL
							Phenol-d5	200 ug/mL
..MB_L1S1_STK_00023	12/31/16		Restek, Lot A0111934		(Purchased Reagent)		1,1'-Biphenyl	1000 ug/mL
							1,2,4,5-Tetrachlorobenzene	1000 ug/mL
							1,2,4-Trichlorobenzene	1000 ug/mL
							1,2-Dichlorobenzene	1000 ug/mL
							1,2-Diphenylhydrazine	1000 ug/mL
							1,3-Dichlorobenzene	1000 ug/mL
							1,3-Dinitrobenzene	1000 ug/mL
							1,4-Dichlorobenzene	1000 ug/mL
							1,4-Dioxane	1000 ug/mL
							1-Methylnaphthalene	1000 ug/mL
							2,2'-oxybis[1-chloropropane]	1000 ug/mL
							2,3,4,6-Tetrachlorophenol	1000 ug/mL
							2,4,5-Trichlorophenol	1000 ug/mL
							2,4,6-Trichlorophenol	1000 ug/mL
							2,4-Dichlorophenol	1000 ug/mL
							2,4-Dimethylphenol	1000 ug/mL
							2,4-Dinitrophenol	2000 ug/mL
							2,4-Dinitrotoluene	1000 ug/mL
							2,6-Dichlorophenol	1000 ug/mL
							2,6-Dinitrotoluene	1000 ug/mL
							2-Chloronaphthalene	1000 ug/mL
							2-Chlorophenol	1000 ug/mL
							2-Methylnaphthalene	1000 ug/mL
							2-Methylphenol	1000 ug/mL
							2-Nitroaniline	1000 ug/mL

REAGENT TRACEABILITY SUMMARY

Lab Name: TestAmerica Buffalo Job No.: 480-89467-1

SDG No.:

Reagent ID	Exp Date	Prep Date	Dilutant Used	Reagent Final Volume	Parent Reagent		Analyte	Concentration
					Reagent ID	Volume Added		
							2-Nitrophenol	1000 ug/mL
							3-Nitroaniline	1000 ug/mL
							4,6-Dinitro-2-methylphenol	2000 ug/mL
							4-Bromophenyl phenyl ether	1000 ug/mL
							4-Chloro-3-methylphenol	1000 ug/mL
							4-Chloroaniline	1000 ug/mL
							4-Chlorophenyl phenyl ether	1000 ug/mL
							4-Methylphenol	1000 ug/mL
							4-Nitroaniline	1000 ug/mL
							4-Nitrophenol	2000 ug/mL
							Acenaphthene	1000 ug/mL
							Acenaphthylene	1000 ug/mL
							Acetophenone	1000 ug/mL
							Aniline	1000 ug/mL
							Anthracene	1000 ug/mL
							Azobenzene	1000 ug/mL
							Benzo[a]anthracene	1000 ug/mL
							Benzo[a]pyrene	1000 ug/mL
							Benzo[b]fluoranthene	1000 ug/mL
							Benzo[g,h,i]perylene	1000 ug/mL
							Benzo[k]fluoranthene	1000 ug/mL
							Benzyl alcohol	1000 ug/mL
							Bis(2-chloroethoxy)methane	1000 ug/mL
							Bis(2-chloroethyl)ether	1000 ug/mL
							Bis(2-ethylhexyl) phthalate	1000 ug/mL
							Butyl benzyl phthalate	1000 ug/mL
							Carbazole	1000 ug/mL
							Chrysene	1000 ug/mL
							Di-n-butyl phthalate	1000 ug/mL
							Di-n-octyl phthalate	1000 ug/mL
							Dibenz(a,h)anthracene	1000 ug/mL
							Dibenzofuran	1000 ug/mL
							Diethyl phthalate	1000 ug/mL
							Dimethyl phthalate	1000 ug/mL
							Diphenylamine	1710 ug/mL
							Fluoranthene	1000 ug/mL
							Fluorene	1000 ug/mL
							Hexachlorobenzene	1000 ug/mL
							Hexachlorobutadiene	1000 ug/mL
							Hexachlorocyclopentadiene	1000 ug/mL
							Hexachloroethane	1000 ug/mL
							Hexadecane	1000 ug/mL
							Indeno[1,2,3-cd]pyrene	1000 ug/mL
							Isophorone	1000 ug/mL
							n-Decane	1000 ug/mL
							N-Nitrosodi-n-propylamine	1000 ug/mL
							N-Nitrosodimethylamine	1000 ug/mL
							N-Nitrosodiphenylamine	2000 ug/mL

REAGENT TRACEABILITY SUMMARY

Lab Name: TestAmerica Buffalo Job No.: 480-89467-1

SDG No.:

Reagent ID	Exp Date	Prep Date	Dilutant Used	Reagent Final Volume	Parent Reagent		Analyte	Concentration
					Reagent ID	Volume Added		
							n-Octadecane	1000 ug/mL
							Naphthalene	1000 ug/mL
							Nitrobenzene	1000 ug/mL
							Pentachlorophenol	2000 ug/mL
							Phenanthrene	1000 ug/mL
							Phenol	1000 ug/mL
							Pyrene	1000 ug/mL
							Pyridine	1000 ug/mL
..MB_L1S10_STK_00002	08/31/16		Restek, Lot A0108988		(Purchased Reagent)		Benzoic acid	2000 ug/mL
							Indene	2000 ug/mL
..MB_L1S11_STK_00002	08/31/16		Rektek, Lot A0108989		(Purchased Reagent)		Atrazine	2000 ug/mL
							Benzaldehyde	2000 ug/mL
							Caprolactam	2000 ug/mL
..MB_L1S9_STK_00002	07/31/16		Restek, Lot A0110231		(Purchased Reagent)		3,3'-Dichlorobenzidine	2000 ug/mL
							Benzidine	2000 ug/mL
..MB_SURR_STK_00042	01/12/18		Restek, Lot A092712		(Purchased Reagent)		2,4,6-Tribromophenol	5000 ug/mL
							2-Fluorobiphenyl	5000 ug/mL
							2-Fluorophenol	5000 ug/mL
							Nitrobenzene-d5 (Surr)	5000 ug/mL
							p-Terphenyl-d14 (Surr)	5000 ug/mL
							Phenol-d5	5000 ug/mL
MB_LIST1_WRK_00215	07/31/16	10/21/15	Methylene Chloride, Lot 121470	1 mL	MB_List1_INT_00022	25 uL	1,1'-Biphenyl	5 ug/mL
							1,2,4,5-Tetrachlorobenzene	5 ug/mL
							1,2,4-Trichlorobenzene	5 ug/mL
							1,2-Dichlorobenzene	5 ug/mL
							1,2-Diphenylhydrazine	5 ug/mL
							1,3-Dichlorobenzene	5 ug/mL
							1,3-Dinitrobenzene	5 ug/mL
							1,4-Dichlorobenzene	5 ug/mL
							1,4-Dioxane	5 ug/mL
							1-Methylnaphthalene	5 ug/mL
							2,2'-oxybis[1-chloropropane]	5 ug/mL
							2,3,4,6-Tetrachlorophenol	5 ug/mL
							2,4,5-Trichlorophenol	5 ug/mL
							2,4,6-Trichlorophenol	5 ug/mL
							2,4-Dichlorophenol	5 ug/mL
							2,4-Dimethylphenol	5 ug/mL
							2,4-Dinitrophenol	10 ug/mL
							2,4-Dinitrotoluene	5 ug/mL
							2,6-Dichlorophenol	5 ug/mL
							2,6-Dinitrotoluene	5 ug/mL
							2-Chloronaphthalene	5 ug/mL
							2-Chlorophenol	5 ug/mL
							2-Methylnaphthalene	5 ug/mL
							2-Methylphenol	5 ug/mL
							2-Nitroaniline	5 ug/mL
							2-Nitrophenol	5 ug/mL

REAGENT TRACEABILITY SUMMARY

Lab Name: TestAmerica Buffalo Job No.: 480-89467-1

SDG No.:

Reagent ID	Exp Date	Prep Date	Dilutant Used	Reagent Final Volume	Parent Reagent		Analyte	Concentration
					Reagent ID	Volume Added		
							3-Nitroaniline	5 ug/mL
							4,6-Dinitro-2-methylphenol	10 ug/mL
							4-Bromophenyl phenyl ether	5 ug/mL
							4-Chloro-3-methylphenol	5 ug/mL
							4-Chloroaniline	5 ug/mL
							4-Chlorophenyl phenyl ether	5 ug/mL
							4-Methylphenol	5 ug/mL
							4-Nitroaniline	5 ug/mL
							4-Nitrophenol	10 ug/mL
							Acenaphthene	5 ug/mL
							Acenaphthylene	5 ug/mL
							Acetophenone	5 ug/mL
							Aniline	5 ug/mL
							Anthracene	5 ug/mL
							Azobenzene	5 ug/mL
							Benzo[a]anthracene	5 ug/mL
							Benzo[a]pyrene	5 ug/mL
							Benzo[b]fluoranthene	5 ug/mL
							Benzo[g,h,i]perylene	5 ug/mL
							Benzo[k]fluoranthene	5 ug/mL
							Benzyl alcohol	5 ug/mL
							Bis(2-chloroethoxy)methane	5 ug/mL
							Bis(2-chloroethyl)ether	5 ug/mL
							Bis(2-ethylhexyl) phthalate	5 ug/mL
							Butyl benzyl phthalate	5 ug/mL
							Carbazole	5 ug/mL
							Chrysene	5 ug/mL
							Di-n-butyl phthalate	5 ug/mL
							Di-n-octyl phthalate	5 ug/mL
							Dibenz(a,h)anthracene	5 ug/mL
							Dibenzofuran	5 ug/mL
							Diethyl phthalate	5 ug/mL
							Dimethyl phthalate	5 ug/mL
							Diphenylamine	8.55 ug/mL
							Fluoranthene	5 ug/mL
							Fluorene	5 ug/mL
							Hexachlorobenzene	5 ug/mL
							Hexachlorobutadiene	5 ug/mL
							Hexachlorocyclopentadiene	5 ug/mL
							Hexachloroethane	5 ug/mL
							Hexadecane	5 ug/mL
							Indeno[1,2,3-cd]pyrene	5 ug/mL
							Isophorone	5 ug/mL
							n-Decane	5 ug/mL
							N-Nitrosodi-n-propylamine	5 ug/mL
							N-Nitrosodimethylamine	5 ug/mL
							N-Nitrosodiphenylamine	10 ug/mL
							n-Octadecane	5 ug/mL

REAGENT TRACEABILITY SUMMARY

Lab Name: TestAmerica Buffalo Job No.: 480-89467-1

SDG No.:

Reagent ID	Exp Date	Prep Date	Dilutant Used	Reagent Final Volume	Parent Reagent		Analyte	Concentration
					Reagent ID	Volume Added		
							Naphthalene	5 ug/mL
							Nitrobenzene	5 ug/mL
							Pentachlorophenol	10 ug/mL
							Phenanthrene	5 ug/mL
							Phenol	5 ug/mL
							Pyrene	5 ug/mL
							Pyridine	5 ug/mL
							Benzoic acid	5 ug/mL
							Indene	5 ug/mL
							Atrazine	5 ug/mL
							Benzaldehyde	5 ug/mL
							Caprolactam	5 ug/mL
							3,3'-Dichlorobenzidine	5 ug/mL
							Benzidine	5 ug/mL
							2,4,6-Tribromophenol	5 ug/mL
							2-Fluorobiphenyl	5 ug/mL
							2-Fluorophenol	5 ug/mL
							Nitrobenzene-d5 (Surr)	5 ug/mL
							p-Terphenyl-d14 (Surr)	5 ug/mL
							Phenol-d5	5 ug/mL
.MB_List1_INT_00022	07/31/16	10/09/15	Methylene Chloride, Lot 121470	10 mL	MB_L1S1_STK_00023	2000 uL	1,1'-Biphenyl	200 ug/mL
							1,2,4,5-Tetrachlorobenzene	200 ug/mL
							1,2,4-Trichlorobenzene	200 ug/mL
							1,2-Dichlorobenzene	200 ug/mL
							1,2-Diphenylhydrazine	200 ug/mL
							1,3-Dichlorobenzene	200 ug/mL
							1,3-Dinitrobenzene	200 ug/mL
							1,4-Dichlorobenzene	200 ug/mL
							1,4-Dioxane	200 ug/mL
							1-Methylnaphthalene	200 ug/mL
							2,2'-oxybis[1-chloropropane]	200 ug/mL
							2,3,4,6-Tetrachlorophenol	200 ug/mL
							2,4,5-Trichlorophenol	200 ug/mL
							2,4,6-Trichlorophenol	200 ug/mL
							2,4-Dichlorophenol	200 ug/mL
							2,4-Dimethylphenol	200 ug/mL
							2,4-Dinitrophenol	400 ug/mL
							2,4-Dinitrotoluene	200 ug/mL
							2,6-Dichlorophenol	200 ug/mL
							2,6-Dinitrotoluene	200 ug/mL
							2-Chloronaphthalene	200 ug/mL
							2-Chlorophenol	200 ug/mL
							2-Methylnaphthalene	200 ug/mL
							2-Methylphenol	200 ug/mL
							2-Nitroaniline	200 ug/mL
							2-Nitrophenol	200 ug/mL
							3-Nitroaniline	200 ug/mL

REAGENT TRACEABILITY SUMMARY

Lab Name: TestAmerica Buffalo Job No.: 480-89467-1

SDG No.:

Reagent ID	Exp Date	Prep Date	Dilutant Used	Reagent Final Volume	Parent Reagent		Analyte	Concentration
					Reagent ID	Volume Added		
							4,6-Dinitro-2-methylphenol	400 ug/mL
							4-Bromophenyl phenyl ether	200 ug/mL
							4-Chloro-3-methylphenol	200 ug/mL
							4-Chloroaniline	200 ug/mL
							4-Chlorophenyl phenyl ether	200 ug/mL
							4-Methylphenol	200 ug/mL
							4-Nitroaniline	200 ug/mL
							4-Nitrophenol	400 ug/mL
							Acenaphthene	200 ug/mL
							Acenaphthylene	200 ug/mL
							Acetophenone	200 ug/mL
							Aniline	200 ug/mL
							Anthracene	200 ug/mL
							Azobenzene	200 ug/mL
							Benzo[a]anthracene	200 ug/mL
							Benzo[a]pyrene	200 ug/mL
							Benzo[b]fluoranthene	200 ug/mL
							Benzo[g,h,i]perylene	200 ug/mL
							Benzo[k]fluoranthene	200 ug/mL
							Benzyl alcohol	200 ug/mL
							Bis(2-chloroethoxy)methane	200 ug/mL
							Bis(2-chloroethyl)ether	200 ug/mL
							Bis(2-ethylhexyl) phthalate	200 ug/mL
							Butyl benzyl phthalate	200 ug/mL
							Carbazole	200 ug/mL
							Chrysene	200 ug/mL
							Di-n-butyl phthalate	200 ug/mL
							Di-n-octyl phthalate	200 ug/mL
							Dibenz(a,h)anthracene	200 ug/mL
							Dibenzofuran	200 ug/mL
							Diethyl phthalate	200 ug/mL
							Dimethyl phthalate	200 ug/mL
							Diphenylamine	342 ug/mL
							Fluoranthene	200 ug/mL
							Fluorene	200 ug/mL
							Hexachlorobenzene	200 ug/mL
							Hexachlorobutadiene	200 ug/mL
							Hexachlorocyclopentadiene	200 ug/mL
							Hexachloroethane	200 ug/mL
							Hexadecane	200 ug/mL
							Indeno[1,2,3-cd]pyrene	200 ug/mL
							Isophorone	200 ug/mL
							n-Decane	200 ug/mL
							N-Nitrosodi-n-propylamine	200 ug/mL
							N-Nitrosodimethylamine	200 ug/mL
							N-Nitrosodiphenylamine	400 ug/mL
							n-Octadecane	200 ug/mL
							Naphthalene	200 ug/mL

REAGENT TRACEABILITY SUMMARY

Lab Name: TestAmerica Buffalo Job No.: 480-89467-1

SDG No.:

Reagent ID	Exp Date	Prep Date	Dilutant Used	Reagent Final Volume	Parent Reagent		Analyte	Concentration
					Reagent ID	Volume Added		
							Nitrobenzene	200 ug/mL
							Pentachlorophenol	400 ug/mL
							Phenanthrene	200 ug/mL
							Phenol	200 ug/mL
							Pyrene	200 ug/mL
							Pyridine	200 ug/mL
					MB_L1S10_STK_00002	1000 uL	Benzoic acid	200 ug/mL
							Indene	200 ug/mL
					MB_L1S11_STK_00002	1000 uL	Atrazine	200 ug/mL
							Benzaldehyde	200 ug/mL
							Caprolactam	200 ug/mL
					MB_L1S9_STK_00002	1000 uL	3,3'-Dichlorobenzidine	200 ug/mL
							Benzidine	200 ug/mL
					MB_SURR_STK_00042	400 uL	2,4,6-Tribromophenol	200 ug/mL
							2-Fluorobiphenyl	200 ug/mL
							2-Fluorophenol	200 ug/mL
							Nitrobenzene-d5 (Surr)	200 ug/mL
							p-Terphenyl-d14 (Surr)	200 ug/mL
							Phenol-d5	200 ug/mL
..MB_L1S1_STK_00023	12/31/16		Restek, Lot A0111934		(Purchased Reagent)		1,1'-Biphenyl	1000 ug/mL
							1,2,4,5-Tetrachlorobenzene	1000 ug/mL
							1,2,4-Trichlorobenzene	1000 ug/mL
							1,2-Dichlorobenzene	1000 ug/mL
							1,2-Diphenylhydrazine	1000 ug/mL
							1,3-Dichlorobenzene	1000 ug/mL
							1,3-Dinitrobenzene	1000 ug/mL
							1,4-Dichlorobenzene	1000 ug/mL
							1,4-Dioxane	1000 ug/mL
							1-Methylnaphthalene	1000 ug/mL
							2,2'-oxybis[1-chloropropane]	1000 ug/mL
							2,3,4,6-Tetrachlorophenol	1000 ug/mL
							2,4,5-Trichlorophenol	1000 ug/mL
							2,4,6-Trichlorophenol	1000 ug/mL
							2,4-Dichlorophenol	1000 ug/mL
							2,4-Dimethylphenol	1000 ug/mL
							2,4-Dinitrophenol	2000 ug/mL
							2,4-Dinitrotoluene	1000 ug/mL
							2,6-Dichlorophenol	1000 ug/mL
							2,6-Dinitrotoluene	1000 ug/mL
							2-Chloronaphthalene	1000 ug/mL
							2-Chlorophenol	1000 ug/mL
							2-Methylnaphthalene	1000 ug/mL
							2-Methylphenol	1000 ug/mL
							2-Nitroaniline	1000 ug/mL
							2-Nitrophenol	1000 ug/mL
							3-Nitroaniline	1000 ug/mL
							4,6-Dinitro-2-methylphenol	2000 ug/mL
							4-Bromophenyl phenyl ether	1000 ug/mL

REAGENT TRACEABILITY SUMMARY

Lab Name: TestAmerica Buffalo Job No.: 480-89467-1

SDG No.:

Reagent ID	Exp Date	Prep Date	Dilutant Used	Reagent Final Volume	Parent Reagent		Analyte	Concentration
					Reagent ID	Volume Added		
							4-Chloro-3-methylphenol	1000 ug/mL
							4-Chloroaniline	1000 ug/mL
							4-Chlorophenyl phenyl ether	1000 ug/mL
							4-Methylphenol	1000 ug/mL
							4-Nitroaniline	1000 ug/mL
							4-Nitrophenol	2000 ug/mL
							Acenaphthene	1000 ug/mL
							Acenaphthylene	1000 ug/mL
							Acetophenone	1000 ug/mL
							Aniline	1000 ug/mL
							Anthracene	1000 ug/mL
							Azobenzene	1000 ug/mL
							Benzo[a]anthracene	1000 ug/mL
							Benzo[a]pyrene	1000 ug/mL
							Benzo[b]fluoranthene	1000 ug/mL
							Benzo[g,h,i]perylene	1000 ug/mL
							Benzo[k]fluoranthene	1000 ug/mL
							Benzyl alcohol	1000 ug/mL
							Bis(2-chloroethoxy)methane	1000 ug/mL
							Bis(2-chloroethyl)ether	1000 ug/mL
							Bis(2-ethylhexyl) phthalate	1000 ug/mL
							Butyl benzyl phthalate	1000 ug/mL
							Carbazole	1000 ug/mL
							Chrysene	1000 ug/mL
							Di-n-butyl phthalate	1000 ug/mL
							Di-n-octyl phthalate	1000 ug/mL
							Dibenz(a,h)anthracene	1000 ug/mL
							Dibenzofuran	1000 ug/mL
							Diethyl phthalate	1000 ug/mL
							Dimethyl phthalate	1000 ug/mL
							Diphenylamine	1710 ug/mL
							Fluoranthene	1000 ug/mL
							Fluorene	1000 ug/mL
							Hexachlorobenzene	1000 ug/mL
							Hexachlorobutadiene	1000 ug/mL
							Hexachlorocyclopentadiene	1000 ug/mL
							Hexachloroethane	1000 ug/mL
							Hexadecane	1000 ug/mL
							Indeno[1,2,3-cd]pyrene	1000 ug/mL
							Isophorone	1000 ug/mL
							n-Decane	1000 ug/mL
							N-Nitrosodi-n-propylamine	1000 ug/mL
							N-Nitrosodimethylamine	1000 ug/mL
							N-Nitrosodiphenylamine	2000 ug/mL
							n-Octadecane	1000 ug/mL
							Naphthalene	1000 ug/mL
							Nitrobenzene	1000 ug/mL
							Pentachlorophenol	2000 ug/mL

REAGENT TRACEABILITY SUMMARY

Lab Name: TestAmerica Buffalo Job No.: 480-89467-1

SDG No.:

Reagent ID	Exp Date	Prep Date	Dilutant Used	Reagent Final Volume	Parent Reagent		Analyte	Concentration
					Reagent ID	Volume Added		
							Phenanthrene	1000 ug/mL
							Phenol	1000 ug/mL
							Pyrene	1000 ug/mL
							Pyridine	1000 ug/mL
..MB_L1S10_STK_00002	08/31/16		Restek, Lot A0108988		(Purchased Reagent)		Benzoic acid	2000 ug/mL
							Indene	2000 ug/mL
..MB_L1S11_STK_00002	08/31/16		Rektek, Lot A0108989		(Purchased Reagent)		Atrazine	2000 ug/mL
							Benzaldehyde	2000 ug/mL
							Caprolactam	2000 ug/mL
..MB_L1S9_STK_00002	07/31/16		Restek, Lot A0110231		(Purchased Reagent)		3,3'-Dichlorobenzidine	2000 ug/mL
							Benzidine	2000 ug/mL
..MB_SURR_STK_00042	01/12/18		Restek, Lot A092712		(Purchased Reagent)		2,4,6-Tribromophenol	5000 ug/mL
							2-Fluorobiphenyl	5000 ug/mL
							2-Fluorophenol	5000 ug/mL
							Nitrobenzene-d5 (Surr)	5000 ug/mL
							p-Terphenyl-d14 (Surr)	5000 ug/mL
							Phenol-d5	5000 ug/mL
MB_LIST1_WRK_00216	07/31/16	10/21/15	Methylene Chloride, Lot 121470	1 mL	MB_List1_INT_00022	100 uL	1,1'-Biphenyl	20 ug/mL
							1,2,4,5-Tetrachlorobenzene	20 ug/mL
							1,2,4-Trichlorobenzene	20 ug/mL
							1,2-Dichlorobenzene	20 ug/mL
							1,2-Diphenylhydrazine	20 ug/mL
							1,3-Dichlorobenzene	20 ug/mL
							1,3-Dinitrobenzene	20 ug/mL
							1,4-Dichlorobenzene	20 ug/mL
							1,4-Dioxane	20 ug/mL
							1-Methylnaphthalene	20 ug/mL
							2,2'-oxybis[1-chloropropane]	20 ug/mL
							2,3,4,6-Tetrachlorophenol	20 ug/mL
							2,4,5-Trichlorophenol	20 ug/mL
							2,4,6-Trichlorophenol	20 ug/mL
							2,4-Dichlorophenol	20 ug/mL
							2,4-Dimethylphenol	20 ug/mL
							2,4-Dinitrophenol	40 ug/mL
							2,4-Dinitrotoluene	20 ug/mL
							2,6-Dichlorophenol	20 ug/mL
							2,6-Dinitrotoluene	20 ug/mL
							2-Chloronaphthalene	20 ug/mL
							2-Chlorophenol	20 ug/mL
							2-Methylnaphthalene	20 ug/mL
							2-Methylphenol	20 ug/mL
							2-Nitroaniline	20 ug/mL
							2-Nitrophenol	20 ug/mL
							3-Nitroaniline	20 ug/mL
							4,6-Dinitro-2-methylphenol	40 ug/mL
							4-Bromophenyl phenyl ether	20 ug/mL
							4-Chloro-3-methylphenol	20 ug/mL

REAGENT TRACEABILITY SUMMARY

Lab Name: TestAmerica Buffalo Job No.: 480-89467-1

SDG No.:

Reagent ID	Exp Date	Prep Date	Dilutant Used	Reagent Final Volume	Parent Reagent		Analyte	Concentration
					Reagent ID	Volume Added		
							4-Chloroaniline	20 ug/mL
							4-Chlorophenyl phenyl ether	20 ug/mL
							4-Methylphenol	20 ug/mL
							4-Nitroaniline	20 ug/mL
							4-Nitrophenol	40 ug/mL
							Acenaphthene	20 ug/mL
							Acenaphthylene	20 ug/mL
							Acetophenone	20 ug/mL
							Aniline	20 ug/mL
							Anthracene	20 ug/mL
							Azobenzene	20 ug/mL
							Benzo[a]anthracene	20 ug/mL
							Benzo[a]pyrene	20 ug/mL
							Benzo[b]fluoranthene	20 ug/mL
							Benzo[g,h,i]perylene	20 ug/mL
							Benzo[k]fluoranthene	20 ug/mL
							Benzyl alcohol	20 ug/mL
							Bis(2-chloroethoxy)methane	20 ug/mL
							Bis(2-chloroethyl)ether	20 ug/mL
							Bis(2-ethylhexyl) phthalate	20 ug/mL
							Butyl benzyl phthalate	20 ug/mL
							Carbazole	20 ug/mL
							Chrysene	20 ug/mL
							Di-n-butyl phthalate	20 ug/mL
							Di-n-octyl phthalate	20 ug/mL
							Dibenz(a,h)anthracene	20 ug/mL
							Dibenzofuran	20 ug/mL
							Diethyl phthalate	20 ug/mL
							Dimethyl phthalate	20 ug/mL
							Diphenylamine	34.2 ug/mL
							Fluoranthene	20 ug/mL
							Fluorene	20 ug/mL
							Hexachlorobenzene	20 ug/mL
							Hexachlorobutadiene	20 ug/mL
							Hexachlorocyclopentadiene	20 ug/mL
							Hexachloroethane	20 ug/mL
							Hexadecane	20 ug/mL
							Indeno[1,2,3-cd]pyrene	20 ug/mL
							Isophorone	20 ug/mL
							n-Decane	20 ug/mL
							N-Nitrosodi-n-propylamine	20 ug/mL
							N-Nitrosodimethylamine	20 ug/mL
							N-Nitrosodiphenylamine	40 ug/mL
							n-Octadecane	20 ug/mL
							Naphthalene	20 ug/mL
							Nitrobenzene	20 ug/mL
							Pentachlorophenol	40 ug/mL
							Phenanthrene	20 ug/mL

REAGENT TRACEABILITY SUMMARY

Lab Name: TestAmerica Buffalo Job No.: 480-89467-1

SDG No.:

Reagent ID	Exp Date	Prep Date	Dilutant Used	Reagent Final Volume	Parent Reagent		Analyte	Concentration
					Reagent ID	Volume Added		
							Phenol	20 ug/mL
							Pyrene	20 ug/mL
							Pyridine	20 ug/mL
							Benzoic acid	20 ug/mL
							Indene	20 ug/mL
							Atrazine	20 ug/mL
							Benzaldehyde	20 ug/mL
							Caprolactam	20 ug/mL
							3,3'-Dichlorobenzidine	20 ug/mL
							Benzidine	20 ug/mL
							2,4,6-Tribromophenol	20 ug/mL
							2-Fluorobiphenyl	20 ug/mL
							2-Fluorophenol	20 ug/mL
							Nitrobenzene-d5 (Surr)	20 ug/mL
							p-Terphenyl-d14 (Surr)	20 ug/mL
							Phenol-d5	20 ug/mL
.MB_List1_INT_00022	07/31/16	10/09/15	Methylene Chloride, Lot 121470	10 mL	MB_L1S1_STK_00023	2000 uL	1,1'-Biphenyl	200 ug/mL
							1,2,4,5-Tetrachlorobenzene	200 ug/mL
							1,2,4-Trichlorobenzene	200 ug/mL
							1,2-Dichlorobenzene	200 ug/mL
							1,2-Diphenylhydrazine	200 ug/mL
							1,3-Dichlorobenzene	200 ug/mL
							1,3-Dinitrobenzene	200 ug/mL
							1,4-Dichlorobenzene	200 ug/mL
							1,4-Dioxane	200 ug/mL
							1-Methylnaphthalene	200 ug/mL
							2,2'-oxybis[1-chloropropane]	200 ug/mL
							2,3,4,6-Tetrachlorophenol	200 ug/mL
							2,4,5-Trichlorophenol	200 ug/mL
							2,4,6-Trichlorophenol	200 ug/mL
							2,4-Dichlorophenol	200 ug/mL
							2,4-Dimethylphenol	200 ug/mL
							2,4-Dinitrophenol	400 ug/mL
							2,4-Dinitrotoluene	200 ug/mL
							2,6-Dichlorophenol	200 ug/mL
							2,6-Dinitrotoluene	200 ug/mL
							2-Chloronaphthalene	200 ug/mL
							2-Chlorophenol	200 ug/mL
							2-Methylnaphthalene	200 ug/mL
							2-Methylphenol	200 ug/mL
							2-Nitroaniline	200 ug/mL
							2-Nitrophenol	200 ug/mL
							3-Nitroaniline	200 ug/mL
							4,6-Dinitro-2-methylphenol	400 ug/mL
							4-Bromophenyl phenyl ether	200 ug/mL
							4-Chloro-3-methylphenol	200 ug/mL
							4-Chloroaniline	200 ug/mL

REAGENT TRACEABILITY SUMMARY

Lab Name: TestAmerica Buffalo Job No.: 480-89467-1

SDG No.:

Reagent ID	Exp Date	Prep Date	Dilutant Used	Reagent Final Volume	Parent Reagent		Analyte	Concentration
					Reagent ID	Volume Added		
							4-Chlorophenyl phenyl ether	200 ug/mL
							4-Methylphenol	200 ug/mL
							4-Nitroaniline	200 ug/mL
							4-Nitrophenol	400 ug/mL
							Acenaphthene	200 ug/mL
							Acenaphthylene	200 ug/mL
							Acetophenone	200 ug/mL
							Aniline	200 ug/mL
							Anthracene	200 ug/mL
							Azobenzene	200 ug/mL
							Benzo[a]anthracene	200 ug/mL
							Benzo[a]pyrene	200 ug/mL
							Benzo[b]fluoranthene	200 ug/mL
							Benzo[g,h,i]perylene	200 ug/mL
							Benzo[k]fluoranthene	200 ug/mL
							Benzyl alcohol	200 ug/mL
							Bis(2-chloroethoxy)methane	200 ug/mL
							Bis(2-chloroethyl)ether	200 ug/mL
							Bis(2-ethylhexyl) phthalate	200 ug/mL
							Butyl benzyl phthalate	200 ug/mL
							Carbazole	200 ug/mL
							Chrysene	200 ug/mL
							Di-n-butyl phthalate	200 ug/mL
							Di-n-octyl phthalate	200 ug/mL
							Dibenz(a,h)anthracene	200 ug/mL
							Dibenzofuran	200 ug/mL
							Diethyl phthalate	200 ug/mL
							Dimethyl phthalate	200 ug/mL
							Diphenylamine	342 ug/mL
							Fluoranthene	200 ug/mL
							Fluorene	200 ug/mL
							Hexachlorobenzene	200 ug/mL
							Hexachlorobutadiene	200 ug/mL
							Hexachlorocyclopentadiene	200 ug/mL
							Hexachloroethane	200 ug/mL
							Hexadecane	200 ug/mL
							Indeno[1,2,3-cd]pyrene	200 ug/mL
							Isophorone	200 ug/mL
							n-Decane	200 ug/mL
							N-Nitrosodi-n-propylamine	200 ug/mL
							N-Nitrosodimethylamine	200 ug/mL
							N-Nitrosodiphenylamine	400 ug/mL
							n-Octadecane	200 ug/mL
							Naphthalene	200 ug/mL
							Nitrobenzene	200 ug/mL
							Pentachlorophenol	400 ug/mL
							Phenanthrene	200 ug/mL
							Phenol	200 ug/mL

REAGENT TRACEABILITY SUMMARY

Lab Name: TestAmerica Buffalo Job No.: 480-89467-1

SDG No.:

Reagent ID	Exp Date	Prep Date	Dilutant Used	Reagent Final Volume	Parent Reagent		Analyte	Concentration
					Reagent ID	Volume Added		
							Pyrene	200 ug/mL
							Pyridine	200 ug/mL
					MB_L1S10_STK_00002	1000 uL	Benzoic acid	200 ug/mL
							Indene	200 ug/mL
					MB_L1S11_STK_00002	1000 uL	Atrazine	200 ug/mL
							Benzaldehyde	200 ug/mL
							Caprolactam	200 ug/mL
					MB_L1S9_STK_00002	1000 uL	3,3'-Dichlorobenzidine	200 ug/mL
							Benzidine	200 ug/mL
					MB_SURR_STK_00042	400 uL	2,4,6-Tribromophenol	200 ug/mL
							2-Fluorobiphenyl	200 ug/mL
							2-Fluorophenol	200 ug/mL
							Nitrobenzene-d5 (Surr)	200 ug/mL
							p-Terphenyl-d14 (Surr)	200 ug/mL
							Phenol-d5	200 ug/mL
..MB_L1S1_STK_00023	12/31/16		Restek, Lot A0111934		(Purchased Reagent)		1,1'-Biphenyl	1000 ug/mL
							1,2,4,5-Tetrachlorobenzene	1000 ug/mL
							1,2,4-Trichlorobenzene	1000 ug/mL
							1,2-Dichlorobenzene	1000 ug/mL
							1,2-Diphenylhydrazine	1000 ug/mL
							1,3-Dichlorobenzene	1000 ug/mL
							1,3-Dinitrobenzene	1000 ug/mL
							1,4-Dichlorobenzene	1000 ug/mL
							1,4-Dioxane	1000 ug/mL
							1-Methylnaphthalene	1000 ug/mL
							2,2'-oxybis[1-chloropropane]	1000 ug/mL
							2,3,4,6-Tetrachlorophenol	1000 ug/mL
							2,4,5-Trichlorophenol	1000 ug/mL
							2,4,6-Trichlorophenol	1000 ug/mL
							2,4-Dichlorophenol	1000 ug/mL
							2,4-Dimethylphenol	1000 ug/mL
							2,4-Dinitrophenol	2000 ug/mL
							2,4-Dinitrotoluene	1000 ug/mL
							2,6-Dichlorophenol	1000 ug/mL
							2,6-Dinitrotoluene	1000 ug/mL
							2-Chloronaphthalene	1000 ug/mL
							2-Chlorophenol	1000 ug/mL
							2-Methylnaphthalene	1000 ug/mL
							2-Methylphenol	1000 ug/mL
							2-Nitroaniline	1000 ug/mL
							2-Nitrophenol	1000 ug/mL
							3-Nitroaniline	1000 ug/mL
							4,6-Dinitro-2-methylphenol	2000 ug/mL
							4-Bromophenyl phenyl ether	1000 ug/mL
							4-Chloro-3-methylphenol	1000 ug/mL
							4-Chloroaniline	1000 ug/mL
							4-Chlorophenyl phenyl ether	1000 ug/mL
							4-Methylphenol	1000 ug/mL

REAGENT TRACEABILITY SUMMARY

Lab Name: TestAmerica Buffalo Job No.: 480-89467-1

SDG No.:

Reagent ID	Exp Date	Prep Date	Dilutant Used	Reagent Final Volume	Parent Reagent		Analyte	Concentration
					Reagent ID	Volume Added		
							4-Nitroaniline	1000 ug/mL
							4-Nitrophenol	2000 ug/mL
							Acenaphthene	1000 ug/mL
							Acenaphthylene	1000 ug/mL
							Acetophenone	1000 ug/mL
							Aniline	1000 ug/mL
							Anthracene	1000 ug/mL
							Azobenzene	1000 ug/mL
							Benzo[a]anthracene	1000 ug/mL
							Benzo[a]pyrene	1000 ug/mL
							Benzo[b]fluoranthene	1000 ug/mL
							Benzo[g,h,i]perylene	1000 ug/mL
							Benzo[k]fluoranthene	1000 ug/mL
							Benzyl alcohol	1000 ug/mL
							Bis(2-chloroethoxy)methane	1000 ug/mL
							Bis(2-chloroethyl)ether	1000 ug/mL
							Bis(2-ethylhexyl) phthalate	1000 ug/mL
							Butyl benzyl phthalate	1000 ug/mL
							Carbazole	1000 ug/mL
							Chrysene	1000 ug/mL
							Di-n-butyl phthalate	1000 ug/mL
							Di-n-octyl phthalate	1000 ug/mL
							Dibenz(a,h)anthracene	1000 ug/mL
							Dibenzofuran	1000 ug/mL
							Diethyl phthalate	1000 ug/mL
							Dimethyl phthalate	1000 ug/mL
							Diphenylamine	1710 ug/mL
							Fluoranthene	1000 ug/mL
							Fluorene	1000 ug/mL
							Hexachlorobenzene	1000 ug/mL
							Hexachlorobutadiene	1000 ug/mL
							Hexachlorocyclopentadiene	1000 ug/mL
							Hexachloroethane	1000 ug/mL
							Hexadecane	1000 ug/mL
							Indeno[1,2,3-cd]pyrene	1000 ug/mL
							Isophorone	1000 ug/mL
							n-Decane	1000 ug/mL
							N-Nitrosodi-n-propylamine	1000 ug/mL
							N-Nitrosodimethylamine	1000 ug/mL
							N-Nitrosodiphenylamine	2000 ug/mL
							n-Octadecane	1000 ug/mL
							Naphthalene	1000 ug/mL
							Nitrobenzene	1000 ug/mL
							Pentachlorophenol	2000 ug/mL
							Phenanthrene	1000 ug/mL
							Phenol	1000 ug/mL
							Pyrene	1000 ug/mL
							Pyridine	1000 ug/mL

REAGENT TRACEABILITY SUMMARY

Lab Name: TestAmerica Buffalo Job No.: 480-89467-1

SDG No.:

Reagent ID	Exp Date	Prep Date	Dilutant Used	Reagent Final Volume	Parent Reagent		Analyte	Concentration
					Reagent ID	Volume Added		
..MB_L1S10_STK_00002	08/31/16		Restek, Lot A0108988		(Purchased Reagent)		Benzoic acid	2000 ug/mL
							Indene	2000 ug/mL
..MB_L1S11_STK_00002	08/31/16		Rektek, Lot A0108989		(Purchased Reagent)		Atrazine	2000 ug/mL
							Benzaldehyde	2000 ug/mL
							Caprolactam	2000 ug/mL
..MB_L1S9_STK_00002	07/31/16		Restek, Lot A0110231		(Purchased Reagent)		3,3'-Dichlorobenzidine	2000 ug/mL
							Benzidine	2000 ug/mL
..MB_SURR_STK_00042	01/12/18		Restek, Lot A092712		(Purchased Reagent)		2,4,6-Tribromophenol	5000 ug/mL
							2-Fluorobiphenyl	5000 ug/mL
							2-Fluorophenol	5000 ug/mL
							Nitrobenzene-d5 (Surr)	5000 ug/mL
							p-Terphenyl-d14 (Surr)	5000 ug/mL
							Phenol-d5	5000 ug/mL
MB_LIST1_WRK_00217	07/31/16	10/21/15	Methylene Chloride, Lot 121470	1 mL	MB_List1_INT_00022	250 uL	1,1'-Biphenyl	50 ug/mL
							1,2,4,5-Tetrachlorobenzene	50 ug/mL
							1,2,4-Trichlorobenzene	50 ug/mL
							1,2-Dichlorobenzene	50 ug/mL
							1,2-Diphenylhydrazine	50 ug/mL
							1,3-Dichlorobenzene	50 ug/mL
							1,3-Dinitrobenzene	50 ug/mL
							1,4-Dichlorobenzene	50 ug/mL
							1,4-Dioxane	50 ug/mL
							1-Methylnaphthalene	50 ug/mL
							2,2'-oxybis[1-chloropropane]	50 ug/mL
							2,3,4,6-Tetrachlorophenol	50 ug/mL
							2,4,5-Trichlorophenol	50 ug/mL
							2,4,6-Trichlorophenol	50 ug/mL
							2,4-Dichlorophenol	50 ug/mL
							2,4-Dimethylphenol	50 ug/mL
							2,4-Dinitrophenol	100 ug/mL
							2,4-Dinitrotoluene	50 ug/mL
							2,6-Dichlorophenol	50 ug/mL
							2,6-Dinitrotoluene	50 ug/mL
							2-Chloronaphthalene	50 ug/mL
							2-Chlorophenol	50 ug/mL
							2-Methylnaphthalene	50 ug/mL
							2-Methylphenol	50 ug/mL
							2-Nitroaniline	50 ug/mL
							2-Nitrophenol	50 ug/mL
							3-Nitroaniline	50 ug/mL
							4,6-Dinitro-2-methylphenol	100 ug/mL
							4-Bromophenyl phenyl ether	50 ug/mL
							4-Chloro-3-methylphenol	50 ug/mL
							4-Chloroaniline	50 ug/mL
							4-Chlorophenyl phenyl ether	50 ug/mL
							4-Methylphenol	50 ug/mL
							4-Nitroaniline	50 ug/mL

REAGENT TRACEABILITY SUMMARY

Lab Name: TestAmerica Buffalo Job No.: 480-89467-1

SDG No.:

Reagent ID	Exp Date	Prep Date	Dilutant Used	Reagent Final Volume	Parent Reagent		Analyte	Concentration
					Reagent ID	Volume Added		
							4-Nitrophenol	100 ug/mL
							Acenaphthene	50 ug/mL
							Acenaphthylene	50 ug/mL
							Acetophenone	50 ug/mL
							Aniline	50 ug/mL
							Anthracene	50 ug/mL
							Azobenzene	50 ug/mL
							Benzo[a]anthracene	50 ug/mL
							Benzo[a]pyrene	50 ug/mL
							Benzo[b]fluoranthene	50 ug/mL
							Benzo[g,h,i]perylene	50 ug/mL
							Benzo[k]fluoranthene	50 ug/mL
							Benzyl alcohol	50 ug/mL
							Bis(2-chloroethoxy)methane	50 ug/mL
							Bis(2-chloroethyl)ether	50 ug/mL
							Bis(2-ethylhexyl) phthalate	50 ug/mL
							Butyl benzyl phthalate	50 ug/mL
							Carbazole	50 ug/mL
							Chrysene	50 ug/mL
							Di-n-butyl phthalate	50 ug/mL
							Di-n-octyl phthalate	50 ug/mL
							Dibenz(a,h)anthracene	50 ug/mL
							Dibenzofuran	50 ug/mL
							Diethyl phthalate	50 ug/mL
							Dimethyl phthalate	50 ug/mL
							Diphenylamine	85.5 ug/mL
							Fluoranthene	50 ug/mL
							Fluorene	50 ug/mL
							Hexachlorobenzene	50 ug/mL
							Hexachlorobutadiene	50 ug/mL
							Hexachlorocyclopentadiene	50 ug/mL
							Hexachloroethane	50 ug/mL
							Hexadecane	50 ug/mL
							Indeno[1,2,3-cd]pyrene	50 ug/mL
							Isophorone	50 ug/mL
							n-Decane	50 ug/mL
							N-Nitrosodi-n-propylamine	50 ug/mL
							N-Nitrosodimethylamine	50 ug/mL
							N-Nitrosodiphenylamine	100 ug/mL
							n-Octadecane	50 ug/mL
							Naphthalene	50 ug/mL
							Nitrobenzene	50 ug/mL
							Pentachlorophenol	100 ug/mL
							Phenanthrene	50 ug/mL
							Phenol	50 ug/mL
							Pyrene	50 ug/mL
							Pyridine	50 ug/mL
							Benzoic acid	50 ug/mL

REAGENT TRACEABILITY SUMMARY

Lab Name: TestAmerica Buffalo Job No.: 480-89467-1

SDG No.:

Reagent ID	Exp Date	Prep Date	Dilutant Used	Reagent Final Volume	Parent Reagent		Analyte	Concentration
					Reagent ID	Volume Added		
							Indene	50 ug/mL
							Atrazine	50 ug/mL
							Benzaldehyde	50 ug/mL
							Caprolactam	50 ug/mL
							3,3'-Dichlorobenzidine	50 ug/mL
							Benzidine	50 ug/mL
							2,4,6-Tribromophenol	50 ug/mL
							2-Fluorobiphenyl	50 ug/mL
							2-Fluorophenol	50 ug/mL
							Nitrobenzene-d5 (Surr)	50 ug/mL
							p-Terphenyl-d14 (Surr)	50 ug/mL
							Phenol-d5	50 ug/mL
.MB_List1_INT_00022	07/31/16	10/09/15	Methylene Chloride, Lot 121470	10 mL	MB_L1S1_STK_00023	2000 uL	1,1'-Biphenyl	200 ug/mL
							1,2,4,5-Tetrachlorobenzene	200 ug/mL
							1,2,4-Trichlorobenzene	200 ug/mL
							1,2-Dichlorobenzene	200 ug/mL
							1,2-Diphenylhydrazine	200 ug/mL
							1,3-Dichlorobenzene	200 ug/mL
							1,3-Dinitrobenzene	200 ug/mL
							1,4-Dichlorobenzene	200 ug/mL
							1,4-Dioxane	200 ug/mL
							1-Methylnaphthalene	200 ug/mL
							2,2'-oxybis[1-chloropropane]	200 ug/mL
							2,3,4,6-Tetrachlorophenol	200 ug/mL
							2,4,5-Trichlorophenol	200 ug/mL
							2,4,6-Trichlorophenol	200 ug/mL
							2,4-Dichlorophenol	200 ug/mL
							2,4-Dimethylphenol	200 ug/mL
							2,4-Dinitrophenol	400 ug/mL
							2,4-Dinitrotoluene	200 ug/mL
							2,6-Dichlorophenol	200 ug/mL
							2,6-Dinitrotoluene	200 ug/mL
							2-Chloronaphthalene	200 ug/mL
							2-Chlorophenol	200 ug/mL
							2-Methylnaphthalene	200 ug/mL
							2-Methylphenol	200 ug/mL
							2-Nitroaniline	200 ug/mL
							2-Nitrophenol	200 ug/mL
							3-Nitroaniline	200 ug/mL
							4,6-Dinitro-2-methylphenol	400 ug/mL
							4-Bromophenyl phenyl ether	200 ug/mL
							4-Chloro-3-methylphenol	200 ug/mL
							4-Chloroaniline	200 ug/mL
							4-Chlorophenyl phenyl ether	200 ug/mL
							4-Methylphenol	200 ug/mL
							4-Nitroaniline	200 ug/mL
							4-Nitrophenol	400 ug/mL

REAGENT TRACEABILITY SUMMARY

Lab Name: TestAmerica Buffalo Job No.: 480-89467-1

SDG No.:

Reagent ID	Exp Date	Prep Date	Dilutant Used	Reagent Final Volume	Parent Reagent		Analyte	Concentration
					Reagent ID	Volume Added		
							Acenaphthene	200 ug/mL
							Acenaphthylene	200 ug/mL
							Acetophenone	200 ug/mL
							Aniline	200 ug/mL
							Anthracene	200 ug/mL
							Azobenzene	200 ug/mL
							Benzo[a]anthracene	200 ug/mL
							Benzo[a]pyrene	200 ug/mL
							Benzo[b]fluoranthene	200 ug/mL
							Benzo[g,h,i]perylene	200 ug/mL
							Benzo[k]fluoranthene	200 ug/mL
							Benzyl alcohol	200 ug/mL
							Bis(2-chloroethoxy)methane	200 ug/mL
							Bis(2-chloroethyl)ether	200 ug/mL
							Bis(2-ethylhexyl) phthalate	200 ug/mL
							Butyl benzyl phthalate	200 ug/mL
							Carbazole	200 ug/mL
							Chrysene	200 ug/mL
							Di-n-butyl phthalate	200 ug/mL
							Di-n-octyl phthalate	200 ug/mL
							Dibenz(a,h)anthracene	200 ug/mL
							Dibenzofuran	200 ug/mL
							Diethyl phthalate	200 ug/mL
							Dimethyl phthalate	200 ug/mL
							Diphenylamine	342 ug/mL
							Fluoranthene	200 ug/mL
							Fluorene	200 ug/mL
							Hexachlorobenzene	200 ug/mL
							Hexachlorobutadiene	200 ug/mL
							Hexachlorocyclopentadiene	200 ug/mL
							Hexachloroethane	200 ug/mL
							Hexadecane	200 ug/mL
							Indeno[1,2,3-cd]pyrene	200 ug/mL
							Isophorone	200 ug/mL
							n-Decane	200 ug/mL
							N-Nitrosodi-n-propylamine	200 ug/mL
							N-Nitrosodimethylamine	200 ug/mL
							N-Nitrosodiphenylamine	400 ug/mL
							n-Octadecane	200 ug/mL
							Naphthalene	200 ug/mL
							Nitrobenzene	200 ug/mL
							Pentachlorophenol	400 ug/mL
							Phenanthrene	200 ug/mL
							Phenol	200 ug/mL
							Pyrene	200 ug/mL
							Pyridine	200 ug/mL
					MB_L1S10_STK_00002	1000 uL	Benzoic acid	200 ug/mL
							Indene	200 ug/mL

REAGENT TRACEABILITY SUMMARY

Lab Name: TestAmerica Buffalo Job No.: 480-89467-1

SDG No.:

Reagent ID	Exp Date	Prep Date	Dilutant Used	Reagent Final Volume	Parent Reagent		Analyte	Concentration
					Reagent ID	Volume Added		
					MB_L1S11_STK_00002	1000 uL	Atrazine	200 ug/mL
							Benzaldehyde	200 ug/mL
							Caprolactam	200 ug/mL
					MB_L1S9_STK_00002	1000 uL	3,3'-Dichlorobenzidine	200 ug/mL
							Benzidine	200 ug/mL
					MB_SURR_STK_00042	400 uL	2,4,6-Tribromophenol	200 ug/mL
							2-Fluorobiphenyl	200 ug/mL
							2-Fluorophenol	200 ug/mL
							Nitrobenzene-d5 (Surr)	200 ug/mL
							p-Terphenyl-d14 (Surr)	200 ug/mL
							Phenol-d5	200 ug/mL
..MB_L1S1_STK_00023	12/31/16		Restek, Lot A0111934		(Purchased Reagent)		1,1'-Biphenyl	1000 ug/mL
							1,2,4,5-Tetrachlorobenzene	1000 ug/mL
							1,2,4-Trichlorobenzene	1000 ug/mL
							1,2-Dichlorobenzene	1000 ug/mL
							1,2-Diphenylhydrazine	1000 ug/mL
							1,3-Dichlorobenzene	1000 ug/mL
							1,3-Dinitrobenzene	1000 ug/mL
							1,4-Dichlorobenzene	1000 ug/mL
							1,4-Dioxane	1000 ug/mL
							1-Methylnaphthalene	1000 ug/mL
							2,2'-oxybis[1-chloropropane]	1000 ug/mL
							2,3,4,6-Tetrachlorophenol	1000 ug/mL
							2,4,5-Trichlorophenol	1000 ug/mL
							2,4,6-Trichlorophenol	1000 ug/mL
							2,4-Dichlorophenol	1000 ug/mL
							2,4-Dimethylphenol	1000 ug/mL
							2,4-Dinitrophenol	2000 ug/mL
							2,4-Dinitrotoluene	1000 ug/mL
							2,6-Dichlorophenol	1000 ug/mL
							2,6-Dinitrotoluene	1000 ug/mL
							2-Chloronaphthalene	1000 ug/mL
							2-Chlorophenol	1000 ug/mL
							2-Methylnaphthalene	1000 ug/mL
							2-Methylphenol	1000 ug/mL
							2-Nitroaniline	1000 ug/mL
							2-Nitrophenol	1000 ug/mL
							3-Nitroaniline	1000 ug/mL
							4,6-Dinitro-2-methylphenol	2000 ug/mL
							4-Bromophenyl phenyl ether	1000 ug/mL
							4-Chloro-3-methylphenol	1000 ug/mL
							4-Chloroaniline	1000 ug/mL
							4-Chlorophenyl phenyl ether	1000 ug/mL
							4-Methylphenol	1000 ug/mL
							4-Nitroaniline	1000 ug/mL
							4-Nitrophenol	2000 ug/mL
							Acenaphthene	1000 ug/mL
							Acenaphthylene	1000 ug/mL

REAGENT TRACEABILITY SUMMARY

Lab Name: TestAmerica Buffalo Job No.: 480-89467-1

SDG No.:

Reagent ID	Exp Date	Prep Date	Dilutant Used	Reagent Final Volume	Parent Reagent		Analyte	Concentration
					Reagent ID	Volume Added		
							Acetophenone	1000 ug/mL
							Aniline	1000 ug/mL
							Anthracene	1000 ug/mL
							Azobenzene	1000 ug/mL
							Benzo[a]anthracene	1000 ug/mL
							Benzo[a]pyrene	1000 ug/mL
							Benzo[b]fluoranthene	1000 ug/mL
							Benzo[g,h,i]perylene	1000 ug/mL
							Benzo[k]fluoranthene	1000 ug/mL
							Benzyl alcohol	1000 ug/mL
							Bis(2-chloroethoxy)methane	1000 ug/mL
							Bis(2-chloroethyl)ether	1000 ug/mL
							Bis(2-ethylhexyl) phthalate	1000 ug/mL
							Butyl benzyl phthalate	1000 ug/mL
							Carbazole	1000 ug/mL
							Chrysene	1000 ug/mL
							Di-n-butyl phthalate	1000 ug/mL
							Di-n-octyl phthalate	1000 ug/mL
							Dibenz(a,h)anthracene	1000 ug/mL
							Dibenzofuran	1000 ug/mL
							Diethyl phthalate	1000 ug/mL
							Dimethyl phthalate	1000 ug/mL
							Diphenylamine	1710 ug/mL
							Fluoranthene	1000 ug/mL
							Fluorene	1000 ug/mL
							Hexachlorobenzene	1000 ug/mL
							Hexachlorobutadiene	1000 ug/mL
							Hexachlorocyclopentadiene	1000 ug/mL
							Hexachloroethane	1000 ug/mL
							Hexadecane	1000 ug/mL
							Indeno[1,2,3-cd]pyrene	1000 ug/mL
							Isophorone	1000 ug/mL
							n-Decane	1000 ug/mL
							N-Nitrosodi-n-propylamine	1000 ug/mL
							N-Nitrosodimethylamine	1000 ug/mL
							N-Nitrosodiphenylamine	2000 ug/mL
							n-Octadecane	1000 ug/mL
							Naphthalene	1000 ug/mL
							Nitrobenzene	1000 ug/mL
							Pentachlorophenol	2000 ug/mL
							Phenanthrene	1000 ug/mL
							Phenol	1000 ug/mL
							Pyrene	1000 ug/mL
							Pyridine	1000 ug/mL
..MB_L1S10_STK_00002	08/31/16		Restek, Lot A0108988		(Purchased Reagent)		Benzoic acid	2000 ug/mL
							Indene	2000 ug/mL
..MB_L1S11_STK_00002	08/31/16		Rektek, Lot A0108989		(Purchased Reagent)		Atrazine	2000 ug/mL
							Benzaldehyde	2000 ug/mL

REAGENT TRACEABILITY SUMMARY

Lab Name: TestAmerica Buffalo Job No.: 480-89467-1

SDG No.:

Reagent ID	Exp Date	Prep Date	Dilutant Used	Reagent Final Volume	Parent Reagent		Analyte	Concentration
					Reagent ID	Volume Added		
							Caprolactam	2000 ug/mL
..MB_L1S9_STK_00002	07/31/16		Restek, Lot A0110231		(Purchased Reagent)		3,3'-Dichlorobenzidine	2000 ug/mL
							Benzidine	2000 ug/mL
..MB_SURR_STK_00042	01/12/18		Restek, Lot A092712		(Purchased Reagent)		2,4,6-Tribromophenol	5000 ug/mL
							2-Fluorobiphenyl	5000 ug/mL
							2-Fluorophenol	5000 ug/mL
							Nitrobenzene-d5 (Surr)	5000 ug/mL
							p-Terphenyl-d14 (Surr)	5000 ug/mL
							Phenol-d5	5000 ug/mL
MB_LIST1_WRK_00218	07/31/16	10/21/15	Methylene Chloride, Lot 121470	1 mL	MB_List1_INT_00022	400 uL	1,1'-Biphenyl	80 ug/mL
							1,2,4,5-Tetrachlorobenzene	80 ug/mL
							1,2,4-Trichlorobenzene	80 ug/mL
							1,2-Dichlorobenzene	80 ug/mL
							1,2-Diphenylhydrazine	80 ug/mL
							1,3-Dichlorobenzene	80 ug/mL
							1,3-Dinitrobenzene	80 ug/mL
							1,4-Dichlorobenzene	80 ug/mL
							1,4-Dioxane	80 ug/mL
							1-Methylnaphthalene	80 ug/mL
							2,2'-oxybis[1-chloropropane]	80 ug/mL
							2,3,4,6-Tetrachlorophenol	80 ug/mL
							2,4,5-Trichlorophenol	80 ug/mL
							2,4,6-Trichlorophenol	80 ug/mL
							2,4-Dichlorophenol	80 ug/mL
							2,4-Dimethylphenol	80 ug/mL
							2,4-Dinitrophenol	160 ug/mL
							2,4-Dinitrotoluene	80 ug/mL
							2,6-Dichlorophenol	80 ug/mL
							2,6-Dinitrotoluene	80 ug/mL
							2-Chloronaphthalene	80 ug/mL
							2-Chlorophenol	80 ug/mL
							2-Methylnaphthalene	80 ug/mL
							2-Methylphenol	80 ug/mL
							2-Nitroaniline	80 ug/mL
							2-Nitrophenol	80 ug/mL
							3-Nitroaniline	80 ug/mL
							4,6-Dinitro-2-methylphenol	160 ug/mL
							4-Bromophenyl phenyl ether	80 ug/mL
							4-Chloro-3-methylphenol	80 ug/mL
							4-Chloroaniline	80 ug/mL
							4-Chlorophenyl phenyl ether	80 ug/mL
							4-Methylphenol	80 ug/mL
							4-Nitroaniline	80 ug/mL
							4-Nitrophenol	160 ug/mL
							Acenaphthene	80 ug/mL
							Acenaphthylene	80 ug/mL
							Acetophenone	80 ug/mL

REAGENT TRACEABILITY SUMMARY

Lab Name: TestAmerica Buffalo Job No.: 480-89467-1

SDG No.:

Reagent ID	Exp Date	Prep Date	Dilutant Used	Reagent Final Volume	Parent Reagent		Analyte	Concentration
					Reagent ID	Volume Added		
							Aniline	80 ug/mL
							Anthracene	80 ug/mL
							Azobenzene	80 ug/mL
							Benzo[a]anthracene	80 ug/mL
							Benzo[a]pyrene	80 ug/mL
							Benzo[b]fluoranthene	80 ug/mL
							Benzo[g,h,i]perylene	80 ug/mL
							Benzo[k]fluoranthene	80 ug/mL
							Benzyl alcohol	80 ug/mL
							Bis(2-chloroethoxy)methane	80 ug/mL
							Bis(2-chloroethyl)ether	80 ug/mL
							Bis(2-ethylhexyl) phthalate	80 ug/mL
							Butyl benzyl phthalate	80 ug/mL
							Carbazole	80 ug/mL
							Chrysene	80 ug/mL
							Di-n-butyl phthalate	80 ug/mL
							Di-n-octyl phthalate	80 ug/mL
							Dibenz(a,h)anthracene	80 ug/mL
							Dibenzofuran	80 ug/mL
							Diethyl phthalate	80 ug/mL
							Dimethyl phthalate	80 ug/mL
							Diphenylamine	136.8 ug/mL
							Fluoranthene	80 ug/mL
							Fluorene	80 ug/mL
							Hexachlorobenzene	80 ug/mL
							Hexachlorobutadiene	80 ug/mL
							Hexachlorocyclopentadiene	80 ug/mL
							Hexachloroethane	80 ug/mL
							Hexadecane	80 ug/mL
							Indeno[1,2,3-cd]pyrene	80 ug/mL
							Isophorone	80 ug/mL
							n-Decane	80 ug/mL
							N-Nitrosodi-n-propylamine	80 ug/mL
							N-Nitrosodimethylamine	80 ug/mL
							N-Nitrosodiphenylamine	160 ug/mL
							n-Octadecane	80 ug/mL
							Naphthalene	80 ug/mL
							Nitrobenzene	80 ug/mL
							Pentachlorophenol	160 ug/mL
							Phenanthrene	80 ug/mL
							Phenol	80 ug/mL
							Pyrene	80 ug/mL
							Pyridine	80 ug/mL
							Benzoic acid	80 ug/mL
							Indene	80 ug/mL
							Atrazine	80 ug/mL
							Benzaldehyde	80 ug/mL
							Caprolactam	80 ug/mL

REAGENT TRACEABILITY SUMMARY

Lab Name: TestAmerica Buffalo Job No.: 480-89467-1

SDG No.:

Reagent ID	Exp Date	Prep Date	Dilutant Used	Reagent Final Volume	Parent Reagent		Analyte	Concentration
					Reagent ID	Volume Added		
							3,3'-Dichlorobenzidine	80 ug/mL
							Benzidine	80 ug/mL
							2,4,6-Tribromophenol	80 ug/mL
							2-Fluorobiphenyl	80 ug/mL
							2-Fluorophenol	80 ug/mL
							Nitrobenzene-d5 (Surr)	80 ug/mL
							p-Terphenyl-d14 (Surr)	80 ug/mL
							Phenol-d5	80 ug/mL
.MB_List1_INT_00022	07/31/16	10/09/15	Methylene Chloride, Lot 121470	10 mL	MB_L1S1_STK_00023	2000 uL	1,1'-Biphenyl	200 ug/mL
							1,2,4,5-Tetrachlorobenzene	200 ug/mL
							1,2,4-Trichlorobenzene	200 ug/mL
							1,2-Dichlorobenzene	200 ug/mL
							1,2-Diphenylhydrazine	200 ug/mL
							1,3-Dichlorobenzene	200 ug/mL
							1,3-Dinitrobenzene	200 ug/mL
							1,4-Dichlorobenzene	200 ug/mL
							1,4-Dioxane	200 ug/mL
							1-Methylnaphthalene	200 ug/mL
							2,2'-oxybis[1-chloropropane]	200 ug/mL
							2,3,4,6-Tetrachlorophenol	200 ug/mL
							2,4,5-Trichlorophenol	200 ug/mL
							2,4,6-Trichlorophenol	200 ug/mL
							2,4-Dichlorophenol	200 ug/mL
							2,4-Dimethylphenol	200 ug/mL
							2,4-Dinitrophenol	400 ug/mL
							2,4-Dinitrotoluene	200 ug/mL
							2,6-Dichlorophenol	200 ug/mL
							2,6-Dinitrotoluene	200 ug/mL
							2-Chloronaphthalene	200 ug/mL
							2-Chlorophenol	200 ug/mL
							2-Methylnaphthalene	200 ug/mL
							2-Methylphenol	200 ug/mL
							2-Nitroaniline	200 ug/mL
							2-Nitrophenol	200 ug/mL
							3-Nitroaniline	200 ug/mL
							4,6-Dinitro-2-methylphenol	400 ug/mL
							4-Bromophenyl phenyl ether	200 ug/mL
							4-Chloro-3-methylphenol	200 ug/mL
							4-Chloroaniline	200 ug/mL
							4-Chlorophenyl phenyl ether	200 ug/mL
							4-Methylphenol	200 ug/mL
							4-Nitroaniline	200 ug/mL
							4-Nitrophenol	400 ug/mL
							Acenaphthene	200 ug/mL
							Acenaphthylene	200 ug/mL
							Acetophenone	200 ug/mL
							Aniline	200 ug/mL

REAGENT TRACEABILITY SUMMARY

Lab Name: TestAmerica Buffalo Job No.: 480-89467-1

SDG No.:

Reagent ID	Exp Date	Prep Date	Dilutant Used	Reagent Final Volume	Parent Reagent		Analyte	Concentration
					Reagent ID	Volume Added		
							Anthracene	200 ug/mL
							Azobenzene	200 ug/mL
							Benzo[a]anthracene	200 ug/mL
							Benzo[a]pyrene	200 ug/mL
							Benzo[b]fluoranthene	200 ug/mL
							Benzo[g,h,i]perylene	200 ug/mL
							Benzo[k]fluoranthene	200 ug/mL
							Benzyl alcohol	200 ug/mL
							Bis(2-chloroethoxy)methane	200 ug/mL
							Bis(2-chloroethyl)ether	200 ug/mL
							Bis(2-ethylhexyl) phthalate	200 ug/mL
							Butyl benzyl phthalate	200 ug/mL
							Carbazole	200 ug/mL
							Chrysene	200 ug/mL
							Di-n-butyl phthalate	200 ug/mL
							Di-n-octyl phthalate	200 ug/mL
							Dibenz(a,h)anthracene	200 ug/mL
							Dibenzofuran	200 ug/mL
							Diethyl phthalate	200 ug/mL
							Dimethyl phthalate	200 ug/mL
							Diphenylamine	342 ug/mL
							Fluoranthene	200 ug/mL
							Fluorene	200 ug/mL
							Hexachlorobenzene	200 ug/mL
							Hexachlorobutadiene	200 ug/mL
							Hexachlorocyclopentadiene	200 ug/mL
							Hexachloroethane	200 ug/mL
							Hexadecane	200 ug/mL
							Indeno[1,2,3-cd]pyrene	200 ug/mL
							Isophorone	200 ug/mL
							n-Decane	200 ug/mL
							N-Nitrosodi-n-propylamine	200 ug/mL
							N-Nitrosodimethylamine	200 ug/mL
							N-Nitrosodiphenylamine	400 ug/mL
							n-Octadecane	200 ug/mL
							Naphthalene	200 ug/mL
							Nitrobenzene	200 ug/mL
							Pentachlorophenol	400 ug/mL
							Phenanthrene	200 ug/mL
							Phenol	200 ug/mL
							Pyrene	200 ug/mL
							Pyridine	200 ug/mL
					MB_L1S10_STK_00002	1000 uL	Benzoic acid	200 ug/mL
							Indene	200 ug/mL
					MB_L1S11_STK_00002	1000 uL	Atrazine	200 ug/mL
							Benzaldehyde	200 ug/mL
							Caprolactam	200 ug/mL
					MB_L1S9_STK_00002	1000 uL	3,3'-Dichlorobenzidine	200 ug/mL

REAGENT TRACEABILITY SUMMARY

Lab Name: TestAmerica Buffalo Job No.: 480-89467-1

SDG No.:

Reagent ID	Exp Date	Prep Date	Dilutant Used	Reagent Final Volume	Parent Reagent		Analyte	Concentration
					Reagent ID	Volume Added		
							Benzidine	200 ug/mL
					MB_SURR_STK_00042	400 uL	2,4,6-Tribromophenol	200 ug/mL
							2-Fluorobiphenyl	200 ug/mL
							2-Fluorophenol	200 ug/mL
							Nitrobenzene-d5 (Surr)	200 ug/mL
							p-Terphenyl-d14 (Surr)	200 ug/mL
							Phenol-d5	200 ug/mL
..MB_L1S1_STK_00023	12/31/16		Restek, Lot A0111934		(Purchased Reagent)		1,1'-Biphenyl	1000 ug/mL
							1,2,4,5-Tetrachlorobenzene	1000 ug/mL
							1,2,4-Trichlorobenzene	1000 ug/mL
							1,2-Dichlorobenzene	1000 ug/mL
							1,2-Diphenylhydrazine	1000 ug/mL
							1,3-Dichlorobenzene	1000 ug/mL
							1,3-Dinitrobenzene	1000 ug/mL
							1,4-Dichlorobenzene	1000 ug/mL
							1,4-Dioxane	1000 ug/mL
							1-Methylnaphthalene	1000 ug/mL
							2,2'-oxybis[1-chloropropane]	1000 ug/mL
							2,3,4,6-Tetrachlorophenol	1000 ug/mL
							2,4,5-Trichlorophenol	1000 ug/mL
							2,4,6-Trichlorophenol	1000 ug/mL
							2,4-Dichlorophenol	1000 ug/mL
							2,4-Dimethylphenol	1000 ug/mL
							2,4-Dinitrophenol	2000 ug/mL
							2,4-Dinitrotoluene	1000 ug/mL
							2,6-Dichlorophenol	1000 ug/mL
							2,6-Dinitrotoluene	1000 ug/mL
							2-Chloronaphthalene	1000 ug/mL
							2-Chlorophenol	1000 ug/mL
							2-Methylnaphthalene	1000 ug/mL
							2-Methylphenol	1000 ug/mL
							2-Nitroaniline	1000 ug/mL
							2-Nitrophenol	1000 ug/mL
							3-Nitroaniline	1000 ug/mL
							4,6-Dinitro-2-methylphenol	2000 ug/mL
							4-Bromophenyl phenyl ether	1000 ug/mL
							4-Chloro-3-methylphenol	1000 ug/mL
							4-Chloroaniline	1000 ug/mL
							4-Chlorophenyl phenyl ether	1000 ug/mL
							4-Methylphenol	1000 ug/mL
							4-Nitroaniline	1000 ug/mL
							4-Nitrophenol	2000 ug/mL
							Acenaphthene	1000 ug/mL
							Acenaphthylene	1000 ug/mL
							Acetophenone	1000 ug/mL
							Aniline	1000 ug/mL
							Anthracene	1000 ug/mL
							Azobenzene	1000 ug/mL

REAGENT TRACEABILITY SUMMARY

Lab Name: TestAmerica Buffalo Job No.: 480-89467-1

SDG No.:

Reagent ID	Exp Date	Prep Date	Dilutant Used	Reagent Final Volume	Parent Reagent		Analyte	Concentration
					Reagent ID	Volume Added		
							Benzo[a]anthracene	1000 ug/mL
							Benzo[a]pyrene	1000 ug/mL
							Benzo[b]fluoranthene	1000 ug/mL
							Benzo[g,h,i]perylene	1000 ug/mL
							Benzo[k]fluoranthene	1000 ug/mL
							Benzyl alcohol	1000 ug/mL
							Bis(2-chloroethoxy)methane	1000 ug/mL
							Bis(2-chloroethyl)ether	1000 ug/mL
							Bis(2-ethylhexyl) phthalate	1000 ug/mL
							Butyl benzyl phthalate	1000 ug/mL
							Carbazole	1000 ug/mL
							Chrysene	1000 ug/mL
							Di-n-butyl phthalate	1000 ug/mL
							Di-n-octyl phthalate	1000 ug/mL
							Dibenz(a,h)anthracene	1000 ug/mL
							Dibenzofuran	1000 ug/mL
							Diethyl phthalate	1000 ug/mL
							Dimethyl phthalate	1000 ug/mL
							Diphenylamine	1710 ug/mL
							Fluoranthene	1000 ug/mL
							Fluorene	1000 ug/mL
							Hexachlorobenzene	1000 ug/mL
							Hexachlorobutadiene	1000 ug/mL
							Hexachlorocyclopentadiene	1000 ug/mL
							Hexachloroethane	1000 ug/mL
							Hexadecane	1000 ug/mL
							Indeno[1,2,3-cd]pyrene	1000 ug/mL
							Isophorone	1000 ug/mL
							n-Decane	1000 ug/mL
							N-Nitrosodi-n-propylamine	1000 ug/mL
							N-Nitrosodimethylamine	1000 ug/mL
							N-Nitrosodiphenylamine	2000 ug/mL
							n-Octadecane	1000 ug/mL
							Naphthalene	1000 ug/mL
							Nitrobenzene	1000 ug/mL
							Pentachlorophenol	2000 ug/mL
							Phenanthrene	1000 ug/mL
							Phenol	1000 ug/mL
							Pyrene	1000 ug/mL
							Pyridine	1000 ug/mL
..MB_L1S10_STK_00002	08/31/16		Restek, Lot A0108988		(Purchased Reagent)		Benzoic acid	2000 ug/mL
							Indene	2000 ug/mL
..MB_L1S11_STK_00002	08/31/16		Rektek, Lot A0108989		(Purchased Reagent)		Atrazine	2000 ug/mL
							Benzaldehyde	2000 ug/mL
							Caprolactam	2000 ug/mL
..MB_L1S9_STK_00002	07/31/16		Restek, Lot A0110231		(Purchased Reagent)		3,3'-Dichlorobenzidine	2000 ug/mL
							Benzidine	2000 ug/mL
..MB_SURR_STK_00042	01/12/18		Restek, Lot A092712		(Purchased Reagent)		2,4,6-Tribromophenol	5000 ug/mL

REAGENT TRACEABILITY SUMMARY

Lab Name: TestAmerica Buffalo Job No.: 480-89467-1

SDG No.:

Reagent ID	Exp Date	Prep Date	Dilutant Used	Reagent Final Volume	Parent Reagent		Analyte	Concentration
					Reagent ID	Volume Added		
							2-Fluorobiphenyl	5000 ug/mL
							2-Fluorophenol	5000 ug/mL
							Nitrobenzene-d5 (Surr)	5000 ug/mL
							p-Terphenyl-d14 (Surr)	5000 ug/mL
							Phenol-d5	5000 ug/mL
MB_LIST1_WRK_00219	07/31/16	10/21/15	Methylene Chloride, Lot 121470	1 mL	MB_List1_INT_00022	500 uL	1,1'-Biphenyl	100 ug/mL
							1,2,4,5-Tetrachlorobenzene	100 ug/mL
							1,2,4-Trichlorobenzene	100 ug/mL
							1,2-Dichlorobenzene	100 ug/mL
							1,2-Diphenylhydrazine	100 ug/mL
							1,3-Dichlorobenzene	100 ug/mL
							1,3-Dinitrobenzene	100 ug/mL
							1,4-Dichlorobenzene	100 ug/mL
							1,4-Dioxane	100 ug/mL
							1-Methylnaphthalene	100 ug/mL
							2,2'-oxybis[1-chloropropane]	100 ug/mL
							2,3,4,6-Tetrachlorophenol	100 ug/mL
							2,4,5-Trichlorophenol	100 ug/mL
							2,4,6-Trichlorophenol	100 ug/mL
							2,4-Dichlorophenol	100 ug/mL
							2,4-Dimethylphenol	100 ug/mL
							2,4-Dinitrophenol	200 ug/mL
							2,4-Dinitrotoluene	100 ug/mL
							2,6-Dichlorophenol	100 ug/mL
							2,6-Dinitrotoluene	100 ug/mL
							2-Chloronaphthalene	100 ug/mL
							2-Chlorophenol	100 ug/mL
							2-Methylnaphthalene	100 ug/mL
							2-Methylphenol	100 ug/mL
							2-Nitroaniline	100 ug/mL
							2-Nitrophenol	100 ug/mL
							3-Nitroaniline	100 ug/mL
							4,6-Dinitro-2-methylphenol	200 ug/mL
							4-Bromophenyl phenyl ether	100 ug/mL
							4-Chloro-3-methylphenol	100 ug/mL
							4-Chloroaniline	100 ug/mL
							4-Chlorophenyl phenyl ether	100 ug/mL
							4-Methylphenol	100 ug/mL
							4-Nitroaniline	100 ug/mL
							4-Nitrophenol	200 ug/mL
							Acenaphthene	100 ug/mL
							Acenaphthylene	100 ug/mL
							Acetophenone	100 ug/mL
							Aniline	100 ug/mL
							Anthracene	100 ug/mL
							Azobenzene	100 ug/mL
							Benzo[a]anthracene	100 ug/mL

REAGENT TRACEABILITY SUMMARY

Lab Name: TestAmerica Buffalo Job No.: 480-89467-1

SDG No.:

Reagent ID	Exp Date	Prep Date	Dilutant Used	Reagent Final Volume	Parent Reagent		Analyte	Concentration
					Reagent ID	Volume Added		
							Benzo[a]pyrene	100 ug/mL
							Benzo[b]fluoranthene	100 ug/mL
							Benzo[g,h,i]perylene	100 ug/mL
							Benzo[k]fluoranthene	100 ug/mL
							Benzyl alcohol	100 ug/mL
							Bis(2-chloroethoxy)methane	100 ug/mL
							Bis(2-chloroethyl)ether	100 ug/mL
							Bis(2-ethylhexyl) phthalate	100 ug/mL
							Butyl benzyl phthalate	100 ug/mL
							Carbazole	100 ug/mL
							Chrysene	100 ug/mL
							Di-n-butyl phthalate	100 ug/mL
							Di-n-octyl phthalate	100 ug/mL
							Dibenz(a,h)anthracene	100 ug/mL
							Dibenzofuran	100 ug/mL
							Diethyl phthalate	100 ug/mL
							Dimethyl phthalate	100 ug/mL
							Diphenylamine	171 ug/mL
							Fluoranthene	100 ug/mL
							Fluorene	100 ug/mL
							Hexachlorobenzene	100 ug/mL
							Hexachlorobutadiene	100 ug/mL
							Hexachlorocyclopentadiene	100 ug/mL
							Hexachloroethane	100 ug/mL
							Hexadecane	100 ug/mL
							Indeno[1,2,3-cd]pyrene	100 ug/mL
							Isophorone	100 ug/mL
							n-Decane	100 ug/mL
							N-Nitrosodi-n-propylamine	100 ug/mL
							N-Nitrosodimethylamine	100 ug/mL
							N-Nitrosodiphenylamine	200 ug/mL
							n-Octadecane	100 ug/mL
							Naphthalene	100 ug/mL
							Nitrobenzene	100 ug/mL
							Pentachlorophenol	200 ug/mL
							Phenanthrene	100 ug/mL
							Phenol	100 ug/mL
							Pyrene	100 ug/mL
							Pyridine	100 ug/mL
							Benzoic acid	100 ug/mL
							Indene	100 ug/mL
							Atrazine	100 ug/mL
							Benzaldehyde	100 ug/mL
							Caprolactam	100 ug/mL
							3,3'-Dichlorobenzidine	100 ug/mL
							Benzidine	100 ug/mL
							2,4,6-Tribromophenol	100 ug/mL
							2-Fluorobiphenyl	100 ug/mL

REAGENT TRACEABILITY SUMMARY

Lab Name: TestAmerica Buffalo Job No.: 480-89467-1

SDG No.:

Reagent ID	Exp Date	Prep Date	Dilutant Used	Reagent Final Volume	Parent Reagent		Analyte	Concentration
					Reagent ID	Volume Added		
							2-Fluorophenol	100 ug/mL
							Nitrobenzene-d5 (Surr)	100 ug/mL
							p-Terphenyl-d14 (Surr)	100 ug/mL
							Phenol-d5	100 ug/mL
.MB_List1_INT_00022	07/31/16	10/09/15	Methylene Chloride, Lot 121470	10 mL	MB_L1S1_STK_00023	2000 uL	1,1'-Biphenyl	200 ug/mL
							1,2,4,5-Tetrachlorobenzene	200 ug/mL
							1,2,4-Trichlorobenzene	200 ug/mL
							1,2-Dichlorobenzene	200 ug/mL
							1,2-Diphenylhydrazine	200 ug/mL
							1,3-Dichlorobenzene	200 ug/mL
							1,3-Dinitrobenzene	200 ug/mL
							1,4-Dichlorobenzene	200 ug/mL
							1,4-Dioxane	200 ug/mL
							1-Methylnaphthalene	200 ug/mL
							2,2'-oxybis[1-chloropropane]	200 ug/mL
							2,3,4,6-Tetrachlorophenol	200 ug/mL
							2,4,5-Trichlorophenol	200 ug/mL
							2,4,6-Trichlorophenol	200 ug/mL
							2,4-Dichlorophenol	200 ug/mL
							2,4-Dimethylphenol	200 ug/mL
							2,4-Dinitrophenol	400 ug/mL
							2,4-Dinitrotoluene	200 ug/mL
							2,6-Dichlorophenol	200 ug/mL
							2,6-Dinitrotoluene	200 ug/mL
							2-Chloronaphthalene	200 ug/mL
							2-Chlorophenol	200 ug/mL
							2-Methylnaphthalene	200 ug/mL
							2-Methylphenol	200 ug/mL
							2-Nitroaniline	200 ug/mL
							2-Nitrophenol	200 ug/mL
							3-Nitroaniline	200 ug/mL
							4,6-Dinitro-2-methylphenol	400 ug/mL
							4-Bromophenyl phenyl ether	200 ug/mL
							4-Chloro-3-methylphenol	200 ug/mL
							4-Chloroaniline	200 ug/mL
							4-Chlorophenyl phenyl ether	200 ug/mL
							4-Methylphenol	200 ug/mL
							4-Nitroaniline	200 ug/mL
							4-Nitrophenol	400 ug/mL
							Acenaphthene	200 ug/mL
							Acenaphthylene	200 ug/mL
							Acetophenone	200 ug/mL
							Aniline	200 ug/mL
							Anthracene	200 ug/mL
							Azobenzene	200 ug/mL
							Benzo[a]anthracene	200 ug/mL
							Benzo[a]pyrene	200 ug/mL

REAGENT TRACEABILITY SUMMARY

Lab Name: TestAmerica Buffalo Job No.: 480-89467-1

SDG No.:

Reagent ID	Exp Date	Prep Date	Dilutant Used	Reagent Final Volume	Parent Reagent		Analyte	Concentration
					Reagent ID	Volume Added		
							Benzo[b]fluoranthene	200 ug/mL
							Benzo[g,h,i]perylene	200 ug/mL
							Benzo[k]fluoranthene	200 ug/mL
							Benzyl alcohol	200 ug/mL
							Bis(2-chloroethoxy)methane	200 ug/mL
							Bis(2-chloroethyl)ether	200 ug/mL
							Bis(2-ethylhexyl) phthalate	200 ug/mL
							Butyl benzyl phthalate	200 ug/mL
							Carbazole	200 ug/mL
							Chrysene	200 ug/mL
							Di-n-butyl phthalate	200 ug/mL
							Di-n-octyl phthalate	200 ug/mL
							Dibenz(a,h)anthracene	200 ug/mL
							Dibenzofuran	200 ug/mL
							Diethyl phthalate	200 ug/mL
							Dimethyl phthalate	200 ug/mL
							Diphenylamine	342 ug/mL
							Fluoranthene	200 ug/mL
							Fluorene	200 ug/mL
							Hexachlorobenzene	200 ug/mL
							Hexachlorobutadiene	200 ug/mL
							Hexachlorocyclopentadiene	200 ug/mL
							Hexachloroethane	200 ug/mL
							Hexadecane	200 ug/mL
							Indeno[1,2,3-cd]pyrene	200 ug/mL
							Isophorone	200 ug/mL
							n-Decane	200 ug/mL
							N-Nitrosodi-n-propylamine	200 ug/mL
							N-Nitrosodimethylamine	200 ug/mL
							N-Nitrosodiphenylamine	400 ug/mL
							n-Octadecane	200 ug/mL
							Naphthalene	200 ug/mL
							Nitrobenzene	200 ug/mL
							Pentachlorophenol	400 ug/mL
							Phenanthrene	200 ug/mL
							Phenol	200 ug/mL
							Pyrene	200 ug/mL
							Pyridine	200 ug/mL
					MB_L1S10_STK_00002	1000 uL	Benzoic acid	200 ug/mL
							Indene	200 ug/mL
					MB_L1S11_STK_00002	1000 uL	Atrazine	200 ug/mL
							Benzaldehyde	200 ug/mL
							Caprolactam	200 ug/mL
					MB_L1S9_STK_00002	1000 uL	3,3'-Dichlorobenzidine	200 ug/mL
							Benzidine	200 ug/mL
					MB_SURR_STK_00042	400 uL	2,4,6-Tribromophenol	200 ug/mL
							2-Fluorobiphenyl	200 ug/mL
							2-Fluorophenol	200 ug/mL

REAGENT TRACEABILITY SUMMARY

Lab Name: TestAmerica Buffalo Job No.: 480-89467-1

SDG No.:

Reagent ID	Exp Date	Prep Date	Dilutant Used	Reagent Final Volume	Parent Reagent		Analyte	Concentration
					Reagent ID	Volume Added		
							Nitrobenzene-d5 (Surr)	200 ug/mL
							p-Terphenyl-d14 (Surr)	200 ug/mL
							Phenol-d5	200 ug/mL
..MB_L1S1_STK_00023	12/31/16		Restek, Lot A0111934		(Purchased Reagent)		1,1'-Biphenyl	1000 ug/mL
							1,2,4,5-Tetrachlorobenzene	1000 ug/mL
							1,2,4-Trichlorobenzene	1000 ug/mL
							1,2-Dichlorobenzene	1000 ug/mL
							1,2-Diphenylhydrazine	1000 ug/mL
							1,3-Dichlorobenzene	1000 ug/mL
							1,3-Dinitrobenzene	1000 ug/mL
							1,4-Dichlorobenzene	1000 ug/mL
							1,4-Dioxane	1000 ug/mL
							1-Methylnaphthalene	1000 ug/mL
							2,2'-oxybis[1-chloropropane]	1000 ug/mL
							2,3,4,6-Tetrachlorophenol	1000 ug/mL
							2,4,5-Trichlorophenol	1000 ug/mL
							2,4,6-Trichlorophenol	1000 ug/mL
							2,4-Dichlorophenol	1000 ug/mL
							2,4-Dimethylphenol	1000 ug/mL
							2,4-Dinitrophenol	2000 ug/mL
							2,4-Dinitrotoluene	1000 ug/mL
							2,6-Dichlorophenol	1000 ug/mL
							2,6-Dinitrotoluene	1000 ug/mL
							2-Chloronaphthalene	1000 ug/mL
							2-Chlorophenol	1000 ug/mL
							2-Methylnaphthalene	1000 ug/mL
							2-Methylphenol	1000 ug/mL
							2-Nitroaniline	1000 ug/mL
							2-Nitrophenol	1000 ug/mL
							3-Nitroaniline	1000 ug/mL
							4,6-Dinitro-2-methylphenol	2000 ug/mL
							4-Bromophenyl phenyl ether	1000 ug/mL
							4-Chloro-3-methylphenol	1000 ug/mL
							4-Chloroaniline	1000 ug/mL
							4-Chlorophenyl phenyl ether	1000 ug/mL
							4-Methylphenol	1000 ug/mL
							4-Nitroaniline	1000 ug/mL
							4-Nitrophenol	2000 ug/mL
							Acenaphthene	1000 ug/mL
							Acenaphthylene	1000 ug/mL
							Acetophenone	1000 ug/mL
							Aniline	1000 ug/mL
							Anthracene	1000 ug/mL
							Azobenzene	1000 ug/mL
							Benzo[a]anthracene	1000 ug/mL
							Benzo[a]pyrene	1000 ug/mL
							Benzo[b]fluoranthene	1000 ug/mL
							Benzo[g,h,i]perylene	1000 ug/mL

REAGENT TRACEABILITY SUMMARY

Lab Name: TestAmerica Buffalo Job No.: 480-89467-1

SDG No.:

Reagent ID	Exp Date	Prep Date	Dilutant Used	Reagent Final Volume	Parent Reagent		Analyte	Concentration
					Reagent ID	Volume Added		
							Benzo[k]fluoranthene	1000 ug/mL
							Benzyl alcohol	1000 ug/mL
							Bis(2-chloroethoxy)methane	1000 ug/mL
							Bis(2-chloroethyl)ether	1000 ug/mL
							Bis(2-ethylhexyl) phthalate	1000 ug/mL
							Butyl benzyl phthalate	1000 ug/mL
							Carbazole	1000 ug/mL
							Chrysene	1000 ug/mL
							Di-n-butyl phthalate	1000 ug/mL
							Di-n-octyl phthalate	1000 ug/mL
							Dibenz(a,h)anthracene	1000 ug/mL
							Dibenzofuran	1000 ug/mL
							Diethyl phthalate	1000 ug/mL
							Dimethyl phthalate	1000 ug/mL
							Diphenylamine	1710 ug/mL
							Fluoranthene	1000 ug/mL
							Fluorene	1000 ug/mL
							Hexachlorobenzene	1000 ug/mL
							Hexachlorobutadiene	1000 ug/mL
							Hexachlorocyclopentadiene	1000 ug/mL
							Hexachloroethane	1000 ug/mL
							Hexadecane	1000 ug/mL
							Indeno[1,2,3-cd]pyrene	1000 ug/mL
							Isophorone	1000 ug/mL
							n-Decane	1000 ug/mL
							N-Nitrosodi-n-propylamine	1000 ug/mL
							N-Nitrosodimethylamine	1000 ug/mL
							N-Nitrosodiphenylamine	2000 ug/mL
							n-Octadecane	1000 ug/mL
							Naphthalene	1000 ug/mL
							Nitrobenzene	1000 ug/mL
							Pentachlorophenol	2000 ug/mL
							Phenanthrene	1000 ug/mL
							Phenol	1000 ug/mL
							Pyrene	1000 ug/mL
							Pyridine	1000 ug/mL
..MB_L1S10_STK_00002	08/31/16		Restek, Lot A0108988		(Purchased Reagent)		Benzoic acid	2000 ug/mL
							Indene	2000 ug/mL
..MB_L1S11_STK_00002	08/31/16		Rektek, Lot A0108989		(Purchased Reagent)		Atrazine	2000 ug/mL
							Benzaldehyde	2000 ug/mL
							Caprolactam	2000 ug/mL
..MB_L1S9_STK_00002	07/31/16		Restek, Lot A0110231		(Purchased Reagent)		3,3'-Dichlorobenzidine	2000 ug/mL
							Benzidine	2000 ug/mL
..MB_SURR_STK_00042	01/12/18		Restek, Lot A092712		(Purchased Reagent)		2,4,6-Tribromophenol	5000 ug/mL
							2-Fluorobiphenyl	5000 ug/mL
							2-Fluorophenol	5000 ug/mL
							Nitrobenzene-d5 (Surr)	5000 ug/mL
							p-Terphenyl-d14 (Surr)	5000 ug/mL

REAGENT TRACEABILITY SUMMARY

Lab Name: TestAmerica Buffalo Job No.: 480-89467-1

SDG No.:

Reagent ID	Exp Date	Prep Date	Dilutant Used	Reagent Final Volume	Parent Reagent		Analyte	Concentration
					Reagent ID	Volume Added		
							Phenol-d5	5000 ug/mL
MB_LIST1_WRK_00220	07/31/16	10/21/15	Methylene Chloride, Lot 121470	1 mL	MB_List1_INT_00022	600 uL	1,1'-Biphenyl	120 ug/mL
							1,2,4,5-Tetrachlorobenzene	120 ug/mL
							1,2,4-Trichlorobenzene	120 ug/mL
							1,2-Dichlorobenzene	120 ug/mL
							1,2-Diphenylhydrazine	120 ug/mL
							1,3-Dichlorobenzene	120 ug/mL
							1,3-Dinitrobenzene	120 ug/mL
							1,4-Dichlorobenzene	120 ug/mL
							1,4-Dioxane	120 ug/mL
							1-Methylnaphthalene	120 ug/mL
							2,2'-oxybis[1-chloropropane]	120 ug/mL
							2,3,4,6-Tetrachlorophenol	120 ug/mL
							2,4,5-Trichlorophenol	120 ug/mL
							2,4,6-Trichlorophenol	120 ug/mL
							2,4-Dichlorophenol	120 ug/mL
							2,4-Dimethylphenol	120 ug/mL
							2,4-Dinitrophenol	240 ug/mL
							2,4-Dinitrotoluene	120 ug/mL
							2,6-Dichlorophenol	120 ug/mL
							2,6-Dinitrotoluene	120 ug/mL
							2-Chloronaphthalene	120 ug/mL
							2-Chlorophenol	120 ug/mL
							2-Methylnaphthalene	120 ug/mL
							2-Methylphenol	120 ug/mL
							2-Nitroaniline	120 ug/mL
							2-Nitrophenol	120 ug/mL
							3-Nitroaniline	120 ug/mL
							4,6-Dinitro-2-methylphenol	240 ug/mL
							4-Bromophenyl phenyl ether	120 ug/mL
							4-Chloro-3-methylphenol	120 ug/mL
							4-Chloroaniline	120 ug/mL
							4-Chlorophenyl phenyl ether	120 ug/mL
							4-Methylphenol	120 ug/mL
							4-Nitroaniline	120 ug/mL
							4-Nitrophenol	240 ug/mL
							Acenaphthene	120 ug/mL
							Acenaphthylene	120 ug/mL
							Acetophenone	120 ug/mL
							Aniline	120 ug/mL
							Anthracene	120 ug/mL
							Azobenzene	120 ug/mL
							Benzo[a]anthracene	120 ug/mL
							Benzo[a]pyrene	120 ug/mL
							Benzo[b]fluoranthene	120 ug/mL
							Benzo[g,h,i]perylene	120 ug/mL
							Benzo[k]fluoranthene	120 ug/mL

REAGENT TRACEABILITY SUMMARY

Lab Name: TestAmerica Buffalo Job No.: 480-89467-1

SDG No.:

Reagent ID	Exp Date	Prep Date	Dilutant Used	Reagent Final Volume	Parent Reagent		Analyte	Concentration
					Reagent ID	Volume Added		
							Benzyl alcohol	120 ug/mL
							Bis(2-chloroethoxy)methane	120 ug/mL
							Bis(2-chloroethyl)ether	120 ug/mL
							Bis(2-ethylhexyl) phthalate	120 ug/mL
							Butyl benzyl phthalate	120 ug/mL
							Carbazole	120 ug/mL
							Chrysene	120 ug/mL
							Di-n-butyl phthalate	120 ug/mL
							Di-n-octyl phthalate	120 ug/mL
							Dibenz(a,h)anthracene	120 ug/mL
							Dibenzofuran	120 ug/mL
							Diethyl phthalate	120 ug/mL
							Dimethyl phthalate	120 ug/mL
							Diphenylamine	205.2 ug/mL
							Fluoranthene	120 ug/mL
							Fluorene	120 ug/mL
							Hexachlorobenzene	120 ug/mL
							Hexachlorobutadiene	120 ug/mL
							Hexachlorocyclopentadiene	120 ug/mL
							Hexachloroethane	120 ug/mL
							Hexadecane	120 ug/mL
							Indeno[1,2,3-cd]pyrene	120 ug/mL
							Isophorone	120 ug/mL
							n-Decane	120 ug/mL
							N-Nitrosodi-n-propylamine	120 ug/mL
							N-Nitrosodimethylamine	120 ug/mL
							N-Nitrosodiphenylamine	240 ug/mL
							n-Octadecane	120 ug/mL
							Naphthalene	120 ug/mL
							Nitrobenzene	120 ug/mL
							Pentachlorophenol	240 ug/mL
							Phenanthrene	120 ug/mL
							Phenol	120 ug/mL
							Pyrene	120 ug/mL
							Pyridine	120 ug/mL
							Benzoic acid	120 ug/mL
							Indene	120 ug/mL
							Atrazine	120 ug/mL
							Benzaldehyde	120 ug/mL
							Caprolactam	120 ug/mL
							3,3'-Dichlorobenzidine	120 ug/mL
							Benzidine	120 ug/mL
							2,4,6-Tribromophenol	120 ug/mL
							2-Fluorobiphenyl	120 ug/mL
							2-Fluorophenol	120 ug/mL
							Nitrobenzene-d5 (Surr)	120 ug/mL
							p-Terphenyl-d14 (Surr)	120 ug/mL
							Phenol-d5	120 ug/mL

REAGENT TRACEABILITY SUMMARY

Lab Name: TestAmerica Buffalo Job No.: 480-89467-1

SDG No.:

Reagent ID	Exp Date	Prep Date	Dilutant Used	Reagent Final Volume	Parent Reagent		Analyte	Concentration
					Reagent ID	Volume Added		
.MB_List1_INT_00022	07/31/16	10/09/15	Methylene Chloride, Lot 121470	10 mL	MB_L1S1_STK_00023	2000 uL	1,1'-Biphenyl	200 ug/mL
							1,2,4,5-Tetrachlorobenzene	200 ug/mL
							1,2,4-Trichlorobenzene	200 ug/mL
							1,2-Dichlorobenzene	200 ug/mL
							1,2-Diphenylhydrazine	200 ug/mL
							1,3-Dichlorobenzene	200 ug/mL
							1,3-Dinitrobenzene	200 ug/mL
							1,4-Dichlorobenzene	200 ug/mL
							1,4-Dioxane	200 ug/mL
							1-Methylnaphthalene	200 ug/mL
							2,2'-oxybis[1-chloropropane]	200 ug/mL
							2,3,4,6-Tetrachlorophenol	200 ug/mL
							2,4,5-Trichlorophenol	200 ug/mL
							2,4,6-Trichlorophenol	200 ug/mL
							2,4-Dichlorophenol	200 ug/mL
							2,4-Dimethylphenol	200 ug/mL
							2,4-Dinitrophenol	400 ug/mL
							2,4-Dinitrotoluene	200 ug/mL
							2,6-Dichlorophenol	200 ug/mL
							2,6-Dinitrotoluene	200 ug/mL
							2-Chloronaphthalene	200 ug/mL
							2-Chlorophenol	200 ug/mL
							2-Methylnaphthalene	200 ug/mL
							2-Methylphenol	200 ug/mL
							2-Nitroaniline	200 ug/mL
							2-Nitrophenol	200 ug/mL
							3-Nitroaniline	200 ug/mL
							4,6-Dinitro-2-methylphenol	400 ug/mL
							4-Bromophenyl phenyl ether	200 ug/mL
							4-Chloro-3-methylphenol	200 ug/mL
							4-Chloroaniline	200 ug/mL
							4-Chlorophenyl phenyl ether	200 ug/mL
							4-Methylphenol	200 ug/mL
							4-Nitroaniline	200 ug/mL
							4-Nitrophenol	400 ug/mL
							Acenaphthene	200 ug/mL
							Acenaphthylene	200 ug/mL
							Acetophenone	200 ug/mL
							Aniline	200 ug/mL
							Anthracene	200 ug/mL
							Azobenzene	200 ug/mL
							Benzo[a]anthracene	200 ug/mL
							Benzo[a]pyrene	200 ug/mL
							Benzo[b]fluoranthene	200 ug/mL
							Benzo[g,h,i]perylene	200 ug/mL
							Benzo[k]fluoranthene	200 ug/mL
							Benzyl alcohol	200 ug/mL

REAGENT TRACEABILITY SUMMARY

Lab Name: TestAmerica Buffalo Job No.: 480-89467-1

SDG No.:

Reagent ID	Exp Date	Prep Date	Dilutant Used	Reagent Final Volume	Parent Reagent		Analyte	Concentration
					Reagent ID	Volume Added		
							Bis(2-chloroethoxy)methane	200 ug/mL
							Bis(2-chloroethyl)ether	200 ug/mL
							Bis(2-ethylhexyl) phthalate	200 ug/mL
							Butyl benzyl phthalate	200 ug/mL
							Carbazole	200 ug/mL
							Chrysene	200 ug/mL
							Di-n-butyl phthalate	200 ug/mL
							Di-n-octyl phthalate	200 ug/mL
							Dibenz(a,h)anthracene	200 ug/mL
							Dibenzofuran	200 ug/mL
							Diethyl phthalate	200 ug/mL
							Dimethyl phthalate	200 ug/mL
							Diphenylamine	342 ug/mL
							Fluoranthene	200 ug/mL
							Fluorene	200 ug/mL
							Hexachlorobenzene	200 ug/mL
							Hexachlorobutadiene	200 ug/mL
							Hexachlorocyclopentadiene	200 ug/mL
							Hexachloroethane	200 ug/mL
							Hexadecane	200 ug/mL
							Indeno[1,2,3-cd]pyrene	200 ug/mL
							Isophorone	200 ug/mL
							n-Decane	200 ug/mL
							N-Nitrosodi-n-propylamine	200 ug/mL
							N-Nitrosodimethylamine	200 ug/mL
							N-Nitrosodiphenylamine	400 ug/mL
							n-Octadecane	200 ug/mL
							Naphthalene	200 ug/mL
							Nitrobenzene	200 ug/mL
							Pentachlorophenol	400 ug/mL
							Phenanthrene	200 ug/mL
							Phenol	200 ug/mL
							Pyrene	200 ug/mL
							Pyridine	200 ug/mL
					MB_L1S10_STK_00002	1000 uL	Benzoic acid	200 ug/mL
							Indene	200 ug/mL
					MB_L1S11_STK_00002	1000 uL	Atrazine	200 ug/mL
							Benzaldehyde	200 ug/mL
							Caprolactam	200 ug/mL
					MB_L1S9_STK_00002	1000 uL	3,3'-Dichlorobenzidine	200 ug/mL
							Benzidine	200 ug/mL
					MB_SURR_STK_00042	400 uL	2,4,6-Tribromophenol	200 ug/mL
							2-Fluorobiphenyl	200 ug/mL
							2-Fluorophenol	200 ug/mL
							Nitrobenzene-d5 (Surr)	200 ug/mL
							p-Terphenyl-d14 (Surr)	200 ug/mL
							Phenol-d5	200 ug/mL
..MB_L1S1_STK_00023	12/31/16		Restek, Lot A0111934		(Purchased Reagent)		1,1'-Biphenyl	1000 ug/mL

REAGENT TRACEABILITY SUMMARY

Lab Name: TestAmerica Buffalo Job No.: 480-89467-1

SDG No.:

Reagent ID	Exp Date	Prep Date	Dilutant Used	Reagent Final Volume	Parent Reagent		Analyte	Concentration
					Reagent ID	Volume Added		
							1,2,4,5-Tetrachlorobenzene	1000 ug/mL
							1,2,4-Trichlorobenzene	1000 ug/mL
							1,2-Dichlorobenzene	1000 ug/mL
							1,2-Diphenylhydrazine	1000 ug/mL
							1,3-Dichlorobenzene	1000 ug/mL
							1,3-Dinitrobenzene	1000 ug/mL
							1,4-Dichlorobenzene	1000 ug/mL
							1,4-Dioxane	1000 ug/mL
							1-Methylnaphthalene	1000 ug/mL
							2,2'-oxybis[1-chloropropane]	1000 ug/mL
							2,3,4,6-Tetrachlorophenol	1000 ug/mL
							2,4,5-Trichlorophenol	1000 ug/mL
							2,4,6-Trichlorophenol	1000 ug/mL
							2,4-Dichlorophenol	1000 ug/mL
							2,4-Dimethylphenol	1000 ug/mL
							2,4-Dinitrophenol	2000 ug/mL
							2,4-Dinitrotoluene	1000 ug/mL
							2,6-Dichlorophenol	1000 ug/mL
							2,6-Dinitrotoluene	1000 ug/mL
							2-Chloronaphthalene	1000 ug/mL
							2-Chlorophenol	1000 ug/mL
							2-Methylnaphthalene	1000 ug/mL
							2-Methylphenol	1000 ug/mL
							2-Nitroaniline	1000 ug/mL
							2-Nitrophenol	1000 ug/mL
							3-Nitroaniline	1000 ug/mL
							4,6-Dinitro-2-methylphenol	2000 ug/mL
							4-Bromophenyl phenyl ether	1000 ug/mL
							4-Chloro-3-methylphenol	1000 ug/mL
							4-Chloroaniline	1000 ug/mL
							4-Chlorophenyl phenyl ether	1000 ug/mL
							4-Methylphenol	1000 ug/mL
							4-Nitroaniline	1000 ug/mL
							4-Nitrophenol	2000 ug/mL
							Acenaphthene	1000 ug/mL
							Acenaphthylene	1000 ug/mL
							Acetophenone	1000 ug/mL
							Aniline	1000 ug/mL
							Anthracene	1000 ug/mL
							Azobenzene	1000 ug/mL
							Benzo[a]anthracene	1000 ug/mL
							Benzo[a]pyrene	1000 ug/mL
							Benzo[b]fluoranthene	1000 ug/mL
							Benzo[g,h,i]perylene	1000 ug/mL
							Benzo[k]fluoranthene	1000 ug/mL
							Benzyl alcohol	1000 ug/mL
							Bis(2-chloroethoxy)methane	1000 ug/mL
							Bis(2-chloroethyl)ether	1000 ug/mL

REAGENT TRACEABILITY SUMMARY

Lab Name: TestAmerica Buffalo Job No.: 480-89467-1

SDG No.:

Reagent ID	Exp Date	Prep Date	Dilutant Used	Reagent Final Volume	Parent Reagent		Analyte	Concentration
					Reagent ID	Volume Added		
							Bis(2-ethylhexyl) phthalate	1000 ug/mL
							Butyl benzyl phthalate	1000 ug/mL
							Carbazole	1000 ug/mL
							Chrysene	1000 ug/mL
							Di-n-butyl phthalate	1000 ug/mL
							Di-n-octyl phthalate	1000 ug/mL
							Dibenz(a,h)anthracene	1000 ug/mL
							Dibenzofuran	1000 ug/mL
							Diethyl phthalate	1000 ug/mL
							Dimethyl phthalate	1000 ug/mL
							Diphenylamine	1710 ug/mL
							Fluoranthene	1000 ug/mL
							Fluorene	1000 ug/mL
							Hexachlorobenzene	1000 ug/mL
							Hexachlorobutadiene	1000 ug/mL
							Hexachlorocyclopentadiene	1000 ug/mL
							Hexachloroethane	1000 ug/mL
							Hexadecane	1000 ug/mL
							Indeno[1,2,3-cd]pyrene	1000 ug/mL
							Isophorone	1000 ug/mL
							n-Decane	1000 ug/mL
							N-Nitrosodi-n-propylamine	1000 ug/mL
							N-Nitrosodimethylamine	1000 ug/mL
							N-Nitrosodiphenylamine	2000 ug/mL
							n-Octadecane	1000 ug/mL
							Naphthalene	1000 ug/mL
							Nitrobenzene	1000 ug/mL
							Pentachlorophenol	2000 ug/mL
							Phenanthrene	1000 ug/mL
							Phenol	1000 ug/mL
							Pyrene	1000 ug/mL
							Pyridine	1000 ug/mL
..MB_L1S10_STK_00002	08/31/16		Restek, Lot A0108988		(Purchased Reagent)		Benzoic acid	2000 ug/mL
							Indene	2000 ug/mL
..MB_L1S11_STK_00002	08/31/16		Rektek, Lot A0108989		(Purchased Reagent)		Atrazine	2000 ug/mL
							Benzaldehyde	2000 ug/mL
							Caprolactam	2000 ug/mL
..MB_L1S9_STK_00002	07/31/16		Restek, Lot A0110231		(Purchased Reagent)		3,3'-Dichlorobenzidine	2000 ug/mL
							Benzidine	2000 ug/mL
..MB_SURR_STK_00042	01/12/18		Restek, Lot A092712		(Purchased Reagent)		2,4,6-Tribromophenol	5000 ug/mL
							2-Fluorobiphenyl	5000 ug/mL
							2-Fluorophenol	5000 ug/mL
							Nitrobenzene-d5 (Surr)	5000 ug/mL
							p-Terphenyl-d14 (Surr)	5000 ug/mL
							Phenol-d5	5000 ug/mL
MB_LIST1_WRK_00221	07/31/16	10/26/15	Methylene Chloride, Lot 118685	5 mL	MB_List1_INT_00022	1250 uL	Acenaphthene	50 ug/mL
							Acenaphthylene	50 ug/mL

REAGENT TRACEABILITY SUMMARY

Lab Name: TestAmerica Buffalo Job No.: 480-89467-1

SDG No.:

Reagent ID	Exp Date	Prep Date	Dilutant Used	Reagent Final Volume	Parent Reagent		Analyte	Concentration
					Reagent ID	Volume Added		
							Anthracene	50 ug/mL
							Benzo[a]anthracene	50 ug/mL
							Benzo[a]pyrene	50 ug/mL
							Benzo[b]fluoranthene	50 ug/mL
							Benzo[g,h,i]perylene	50 ug/mL
							Benzo[k]fluoranthene	50 ug/mL
							Chrysene	50 ug/mL
							Dibenz(a,h)anthracene	50 ug/mL
							Fluoranthene	50 ug/mL
							Fluorene	50 ug/mL
							Indeno[1,2,3-cd]pyrene	50 ug/mL
							Naphthalene	50 ug/mL
							Phenanthrene	50 ug/mL
							Pyrene	50 ug/mL
							2,4,6-Tribromophenol	50 ug/mL
							2-Fluorobiphenyl	50 ug/mL
							2-Fluorophenol	50 ug/mL
							Nitrobenzene-d5 (Surr)	50 ug/mL
							p-Terphenyl-d14 (Surr)	50 ug/mL
							Phenol-d5	50 ug/mL
.MB_List1_INT_00022	07/31/16	10/09/15	Methylene Chloride, Lot 121470	10 mL	MB_L1S1_STK_00023	2000 uL	Acenaphthene	200 ug/mL
							Acenaphthylene	200 ug/mL
							Anthracene	200 ug/mL
							Benzo[a]anthracene	200 ug/mL
							Benzo[a]pyrene	200 ug/mL
							Benzo[b]fluoranthene	200 ug/mL
							Benzo[g,h,i]perylene	200 ug/mL
							Benzo[k]fluoranthene	200 ug/mL
							Chrysene	200 ug/mL
							Dibenz(a,h)anthracene	200 ug/mL
							Fluoranthene	200 ug/mL
							Fluorene	200 ug/mL
							Indeno[1,2,3-cd]pyrene	200 ug/mL
							Naphthalene	200 ug/mL
							Phenanthrene	200 ug/mL
							Pyrene	200 ug/mL
					MB_SURR_STK_00042	400 uL	2,4,6-Tribromophenol	200 ug/mL
							2-Fluorobiphenyl	200 ug/mL
							2-Fluorophenol	200 ug/mL
							Nitrobenzene-d5 (Surr)	200 ug/mL
							p-Terphenyl-d14 (Surr)	200 ug/mL
							Phenol-d5	200 ug/mL
..MB_L1S1_STK_00023	12/31/16		Restek, Lot A0111934		(Purchased Reagent)		Acenaphthene	1000 ug/mL
							Acenaphthylene	1000 ug/mL
							Anthracene	1000 ug/mL
							Benzo[a]anthracene	1000 ug/mL
							Benzo[a]pyrene	1000 ug/mL

REAGENT TRACEABILITY SUMMARY

Lab Name: TestAmerica Buffalo Job No.: 480-89467-1

SDG No.:

Reagent ID	Exp Date	Prep Date	Dilutant Used	Reagent Final Volume	Parent Reagent		Analyte	Concentration
					Reagent ID	Volume Added		
							Benzo[b]fluoranthene	1000 ug/mL
							Benzo[g,h,i]perylene	1000 ug/mL
							Benzo[k]fluoranthene	1000 ug/mL
							Chrysene	1000 ug/mL
							Dibenz(a,h)anthracene	1000 ug/mL
							Fluoranthene	1000 ug/mL
							Fluorene	1000 ug/mL
							Indeno[1,2,3-cd]pyrene	1000 ug/mL
							Naphthalene	1000 ug/mL
							Phenanthrene	1000 ug/mL
							Pyrene	1000 ug/mL
..MB_SURR_STK_00042	01/12/18		Restek, Lot A092712		(Purchased Reagent)		2,4,6-Tribromophenol	5000 ug/mL
							2-Fluorobiphenyl	5000 ug/mL
							2-Fluorophenol	5000 ug/mL
							Nitrobenzene-d5 (Surr)	5000 ug/mL
							p-Terphenyl-d14 (Surr)	5000 ug/mL
							Phenol-d5	5000 ug/mL
MB_LLIS_WRK_00095	06/01/16	10/07/15	Methylene Chloride, Lot 118685	10 mL	MB_INTSTD_STK_00013	1 mL	1,4-Dichlorobenzene-d4	200 ng/uL
							Acenaphthene-d10	200 ng/uL
							Chrysene-d12	200 ng/uL
							Naphthalene-d8	200 ng/uL
							Perylene-d12	200 ng/uL
							Phenanthrene-d10	200 ng/uL
.MB_INTSTD_STK_00013	02/29/20		Restek, Lot A0109360		(Purchased Reagent)		1,4-Dichlorobenzene-d4	2000 ug/mL
							Acenaphthene-d10	2000 ug/mL
							Chrysene-d12	2000 ug/mL
							Naphthalene-d8	2000 ug/mL
							Perylene-d12	2000 ug/mL
							Phenanthrene-d10	2000 ug/mL
O_8270/625LCS_00048	04/28/16	10/28/15	ACETONE, Lot 3032536	100 mL	8270 List 1/S_00006	5 mL	3,3'-Dichlorobenzidine	100 ug/mL
							Benzidine	100 ug/mL
					8270 List1/10_00005	5 mL	Benzoic acid	100 ug/mL
							Indene	100 ug/mL
					8270 list1/11_00006	5 mL	Atrazine	100 ug/mL
							Benzaldehyde	100 ug/mL
							Caprolactam	100 ug/mL
					O_8270MegaMix_00028	5 mL	1,1'-Biphenyl	50 ug/mL
							1,2,4,5-Tetrachlorobenzene	50 ug/mL
							1,2,4-Trichlorobenzene	50 ug/mL
							1,2-Dichlorobenzene	50 ug/mL
							1,3-Dichlorobenzene	50 ug/mL
							1,3-Dinitrobenzene	50 ug/mL
							1,4-Dichlorobenzene	50 ug/mL
							1,4-Dioxane	50 ug/mL
							1-Methylnaphthalene	50 ug/mL
							2,2'-oxybis[1-chloropropane]	50 ug/mL

REAGENT TRACEABILITY SUMMARY

Lab Name: TestAmerica Buffalo Job No.: 480-89467-1

SDG No.:

Reagent ID	Exp Date	Prep Date	Dilutant Used	Reagent Final Volume	Parent Reagent		Analyte	Concentration
					Reagent ID	Volume Added		
							2,3,4,6-Tetrachlorophenol	50 ug/mL
							2,4,5-Trichlorophenol	50 ug/mL
							2,4,6-Trichlorophenol	50 ug/mL
							2,4-Dichlorophenol	50 ug/mL
							2,4-Dimethylphenol	50 ug/mL
							2,4-Dinitrophenol	100 ug/mL
							2,4-Dinitrotoluene	50 ug/mL
							2,6-Dichlorophenol	50 ug/mL
							2,6-Dinitrotoluene	50 ug/mL
							2-Chloronaphthalene	50 ug/mL
							2-Chlorophenol	50 ug/mL
							2-Methylnaphthalene	50 ug/mL
							2-Methylphenol	50 ug/mL
							2-Nitroaniline	50 ug/mL
							2-Nitrophenol	50 ug/mL
							3-Methylphenol	50 ug/mL
							3-Nitroaniline	50 ug/mL
							4,6-Dinitro-2-methylphenol	100 ug/mL
							4-Bromophenyl phenyl ether	50 ug/mL
							4-Chloro-3-methylphenol	50 ug/mL
							4-Chloroaniline	50 ug/mL
							4-Chlorophenyl phenyl ether	50 ug/mL
							4-Methylphenol	50 ug/mL
							4-Nitroaniline	50 ug/mL
							4-Nitrophenol	100 ug/mL
							Acenaphthene	50 ug/mL
							Acenaphthylene	50 ug/mL
							Acetophenone	50 ug/mL
							Aniline	50 ug/mL
							Anthracene	50 ug/mL
							Azobenzene	50 ug/mL
							Benzo[a]anthracene	50 ug/mL
							Benzo[a]pyrene	50 ug/mL
							Benzo[b]fluoranthene	50 ug/mL
							Benzo[g,h,i]perylene	50 ug/mL
							Benzo[k]fluoranthene	50 ug/mL
							Benzyl alcohol	50 ug/mL
							Bis(2-chloroethoxy)methane	50 ug/mL
							Bis(2-chloroethyl)ether	50 ug/mL
							Bis(2-ethylhexyl) phthalate	50 ug/mL
							Butyl benzyl phthalate	50 ug/mL
							Carbazole	50 ug/mL
							Chrysene	50 ug/mL
							Di-n-butyl phthalate	50 ug/mL
							Di-n-octyl phthalate	50 ug/mL
							Dibenz(a,h)anthracene	50 ug/mL
							Dibenzofuran	50 ug/mL
							Diethyl phthalate	50 ug/mL

REAGENT TRACEABILITY SUMMARY

Lab Name: TestAmerica Buffalo Job No.: 480-89467-1

SDG No.:

Reagent ID	Exp Date	Prep Date	Dilutant Used	Reagent Final Volume	Parent Reagent		Analyte	Concentration
					Reagent ID	Volume Added		
							Dimethyl phthalate	50 ug/mL
							Diphenylamine	85.5 ug/mL
							Fluoranthene	50 ug/mL
							Fluorene	50 ug/mL
							Hexachlorobenzene	50 ug/mL
							Hexachlorobutadiene	50 ug/mL
							Hexachlorocyclopentadiene	50 ug/mL
							Hexachloroethane	50 ug/mL
							Hexadecane	50 ug/mL
							Indeno[1,2,3-cd]pyrene	50 ug/mL
							Isophorone	50 ug/mL
							n-Decane	50 ug/mL
							N-Nitrosodi-n-propylamine	50 ug/mL
							N-Nitrosodimethylamine	100 ug/mL
							N-Nitrosodiphenylamine	100 ug/mL
							n-Octadecane	50 ug/mL
							Naphthalene	50 ug/mL
							Nitrobenzene	50 ug/mL
							Pentachlorophenol	100 ug/mL
							Phenanthrene	50 ug/mL
							Phenol	50 ug/mL
							Pyrene	50 ug/mL
							Pyridine	50 ug/mL
.8270 List 1/S_00006	01/31/17		Restek, Lot A0112567		(Purchased Reagent)		3,3'-Dichlorobenzidine	2000 ug/mL
							Benzidine	2000 ug/mL
.8270 List1/10_00005	08/31/16		Restek, Lot A0108988		(Purchased Reagent)		Benzoic acid	2000 ug/mL
							Indene	2000 ug/mL
.8270 list1/11_00006	01/31/17		Restek, Lot A0112321		(Purchased Reagent)		Atrazine	2000 ug/mL
							Benzaldehyde	2000 ug/mL
							Caprolactam	2000 ug/mL
.O_8270MegaMix_00028	12/31/16		Restek, Lot A0111934		(Purchased Reagent)		1,1'-Biphenyl	1000 ug/mL
							1,2,4,5-Tetrachlorobenzene	1000 ug/mL
							1,2,4-Trichlorobenzene	1000 ug/mL
							1,2-Dichlorobenzene	1000 ug/mL
							1,3-Dichlorobenzene	1000 ug/mL
							1,3-Dinitrobenzene	1000 ug/mL
							1,4-Dichlorobenzene	1000 ug/mL
							1,4-Dioxane	1000 ug/mL
							1-Methylnaphthalene	1000 ug/mL
							2,2'-oxybis[1-chloropropane]	1000 ug/mL
							2,3,4,6-Tetrachlorophenol	1000 ug/mL
							2,4,5-Trichlorophenol	1000 ug/mL
							2,4,6-Trichlorophenol	1000 ug/mL
							2,4-Dichlorophenol	1000 ug/mL
							2,4-Dimethylphenol	1000 ug/mL
							2,4-Dinitrophenol	2000 ug/mL
							2,4-Dinitrotoluene	1000 ug/mL
							2,6-Dichlorophenol	1000 ug/mL

REAGENT TRACEABILITY SUMMARY

Lab Name: TestAmerica Buffalo Job No.: 480-89467-1

SDG No.:

Reagent ID	Exp Date	Prep Date	Dilutant Used	Reagent Final Volume	Parent Reagent		Analyte	Concentration
					Reagent ID	Volume Added		
							2,6-Dinitrotoluene	1000 ug/mL
							2-Chloronaphthalene	1000 ug/mL
							2-Chlorophenol	1000 ug/mL
							2-Methylnaphthalene	1000 ug/mL
							2-Methylphenol	1000 ug/mL
							2-Nitroaniline	1000 ug/mL
							2-Nitrophenol	1000 ug/mL
							3-Methylphenol	1000 ug/mL
							3-Nitroaniline	1000 ug/mL
							4,6-Dinitro-2-methylphenol	2000 ug/mL
							4-Bromophenyl phenyl ether	1000 ug/mL
							4-Chloro-3-methylphenol	1000 ug/mL
							4-Chloroaniline	1000 ug/mL
							4-Chlorophenyl phenyl ether	1000 ug/mL
							4-Methylphenol	1000 ug/mL
							4-Nitroaniline	1000 ug/mL
							4-Nitrophenol	2000 ug/mL
							Acenaphthene	1000 ug/mL
							Acenaphthylene	1000 ug/mL
							Acetophenone	1000 ug/mL
							Aniline	1000 ug/mL
							Anthracene	1000 ug/mL
							Azobenzene	1000 ug/mL
							Benzo[a]anthracene	1000 ug/mL
							Benzo[a]pyrene	1000 ug/mL
							Benzo[b]fluoranthene	1000 ug/mL
							Benzo[g,h,i]perylene	1000 ug/mL
							Benzo[k]fluoranthene	1000 ug/mL
							Benzyl alcohol	1000 ug/mL
							Bis(2-chloroethoxy)methane	1000 ug/mL
							Bis(2-chloroethyl)ether	1000 ug/mL
							Bis(2-ethylhexyl) phthalate	1000 ug/mL
							Butyl benzyl phthalate	1000 ug/mL
							Carbazole	1000 ug/mL
							Chrysene	1000 ug/mL
							Di-n-butyl phthalate	1000 ug/mL
							Di-n-octyl phthalate	1000 ug/mL
							Dibenz(a,h)anthracene	1000 ug/mL
							Dibenzofuran	1000 ug/mL
							Diethyl phthalate	1000 ug/mL
							Dimethyl phthalate	1000 ug/mL
							Diphenylamine	1710 ug/mL
							Fluoranthene	1000 ug/mL
							Fluorene	1000 ug/mL
							Hexachlorobenzene	1000 ug/mL
							Hexachlorobutadiene	1000 ug/mL
							Hexachlorocyclopentadiene	1000 ug/mL
							Hexachloroethane	1000 ug/mL

REAGENT TRACEABILITY SUMMARY

Lab Name: TestAmerica Buffalo Job No.: 480-89467-1

SDG No.:

Reagent ID	Exp Date	Prep Date	Dilutant Used	Reagent Final Volume	Parent Reagent		Analyte	Concentration
					Reagent ID	Volume Added		
							Hexadecane	1000 ug/mL
							Indeno[1,2,3-cd]pyrene	1000 ug/mL
							Isophorone	1000 ug/mL
							n-Decane	1000 ug/mL
							N-Nitrosodi-n-propylamine	1000 ug/mL
							N-Nitrosodimethylamine	2000 ug/mL
							N-Nitrosodiphenylamine	2000 ug/mL
							n-Octadecane	1000 ug/mL
							Naphthalene	1000 ug/mL
							Nitrobenzene	1000 ug/mL
							Pentachlorophenol	2000 ug/mL
							Phenanthrene	1000 ug/mL
							Phenol	1000 ug/mL
							Pyrene	1000 ug/mL
							Pyridine	1000 ug/mL
O_8270LL LCS_00032	04/09/16	10/27/15	ACETONE, Lot 3032536	100 mL	O_8270/625LCS_00047	8 mL	3,3'-Dichlorobenzidine	8 ug/mL
							Benzidine	8 ug/mL
							Benzoic acid	8 ug/mL
							Indene	8 ug/mL
							Atrazine	8 ug/mL
							Benzaldehyde	8 ug/mL
							Caprolactam	8 ug/mL
							1,1'-Biphenyl	4 ug/mL
							1,2,4,5-Tetrachlorobenzene	4 ug/mL
							1,2,4-Trichlorobenzene	4 ug/mL
							1,2-Dichlorobenzene	4 ug/mL
							1,3-Dichlorobenzene	4 ug/mL
							1,3-Dinitrobenzene	4 ug/mL
							1,4-Dichlorobenzene	4 ug/mL
							1,4-Dioxane	4 ug/mL
							1-Methylnaphthalene	4 ug/mL
							2,2'-oxybis[1-chloropropane]	4 ug/mL
							2,3,4,6-Tetrachlorophenol	4 ug/mL
							2,4,5-Trichlorophenol	4 ug/mL
							2,4,6-Trichlorophenol	4 ug/mL
							2,4-Dichlorophenol	4 ug/mL
							2,4-Dimethylphenol	4 ug/mL
							2,4-Dinitrophenol	8 ug/mL
							2,4-Dinitrotoluene	4 ug/mL
							2,6-Dichlorophenol	4 ug/mL
							2,6-Dinitrotoluene	4 ug/mL
							2-Chloronaphthalene	4 ug/mL
							2-Chlorophenol	4 ug/mL
							2-Methylnaphthalene	4 ug/mL
							2-Methylphenol	4 ug/mL
							2-Nitroaniline	4 ug/mL
							2-Nitrophenol	4 ug/mL

REAGENT TRACEABILITY SUMMARY

Lab Name: TestAmerica Buffalo Job No.: 480-89467-1

SDG No.:

Reagent ID	Exp Date	Prep Date	Dilutant Used	Reagent Final Volume	Parent Reagent		Analyte	Concentration
					Reagent ID	Volume Added		
							3-Methylphenol	4 ug/mL
							3-Nitroaniline	4 ug/mL
							4,6-Dinitro-2-methylphenol	8 ug/mL
							4-Bromophenyl phenyl ether	4 ug/mL
							4-Chloro-3-methylphenol	4 ug/mL
							4-Chloroaniline	4 ug/mL
							4-Chlorophenyl phenyl ether	4 ug/mL
							4-Methylphenol	4 ug/mL
							4-Nitroaniline	4 ug/mL
							4-Nitrophenol	8 ug/mL
							Acenaphthene	4 ug/mL
							Acenaphthylene	4 ug/mL
							Acetophenone	4 ug/mL
							Aniline	4 ug/mL
							Anthracene	4 ug/mL
							Azobenzene	4 ug/mL
							Benzo[a]anthracene	4 ug/mL
							Benzo[a]pyrene	4 ug/mL
							Benzo[b]fluoranthene	4 ug/mL
							Benzo[g,h,i]perylene	4 ug/mL
							Benzo[k]fluoranthene	4 ug/mL
							Benzyl alcohol	4 ug/mL
							Bis(2-chloroethoxy)methane	4 ug/mL
							Bis(2-chloroethyl)ether	4 ug/mL
							Bis(2-ethylhexyl) phthalate	4 ug/mL
							Butyl benzyl phthalate	4 ug/mL
							Carbazole	4 ug/mL
							Chrysene	4 ug/mL
							Di-n-butyl phthalate	4 ug/mL
							Di-n-octyl phthalate	4 ug/mL
							Dibenz(a,h)anthracene	4 ug/mL
							Dibenzofuran	4 ug/mL
							Diethyl phthalate	4 ug/mL
							Dimethyl phthalate	4 ug/mL
							Diphenylamine	6.84 ug/mL
							Fluoranthene	4 ug/mL
							Fluorene	4 ug/mL
							Hexachlorobenzene	4 ug/mL
							Hexachlorobutadiene	4 ug/mL
							Hexachlorocyclopentadiene	4 ug/mL
							Hexachloroethane	4 ug/mL
							Hexadecane	4 ug/mL
							Indeno[1,2,3-cd]pyrene	4 ug/mL
							Isophorone	4 ug/mL
							n-Decane	4 ug/mL
							N-Nitrosodi-n-propylamine	4 ug/mL
							N-Nitrosodimethylamine	8 ug/mL
							N-Nitrosodiphenylamine	8 ug/mL

REAGENT TRACEABILITY SUMMARY

Lab Name: TestAmerica Buffalo Job No.: 480-89467-1

SDG No.:

Reagent ID	Exp Date	Prep Date	Dilutant Used	Reagent Final Volume	Parent Reagent		Analyte	Concentration
					Reagent ID	Volume Added		
							n-Octadecane	4 ug/mL
							Naphthalene	4 ug/mL
							Nitrobenzene	4 ug/mL
							Pentachlorophenol	8 ug/mL
							Phenanthrene	4 ug/mL
							Phenol	4 ug/mL
							Pyrene	4 ug/mL
							Pyridine	4 ug/mL
.O_8270/625LCS_00047	04/09/16	10/09/15	ACETONE, Lot 2929878	100 mL	8270 List 1/S_00005	5 mL	3,3'-Dichlorobenzidine	100 ug/mL
							Benzidine	100 ug/mL
					8270 List1/10_00004	5 mL	Benzoic acid	100 ug/mL
							Indene	100 ug/mL
					8270 list1/11_00005	5 mL	Atrazine	100 ug/mL
							Benzaldehyde	100 ug/mL
							Caprolactam	100 ug/mL
					O_8270MegaMix_00027	5 mL	1,1'-Biphenyl	50 ug/mL
							1,2,4,5-Tetrachlorobenzene	50 ug/mL
							1,2,4-Trichlorobenzene	50 ug/mL
							1,2-Dichlorobenzene	50 ug/mL
							1,3-Dichlorobenzene	50 ug/mL
							1,3-Dinitrobenzene	50 ug/mL
							1,4-Dichlorobenzene	50 ug/mL
							1,4-Dioxane	50 ug/mL
							1-Methylnaphthalene	50 ug/mL
							2,2'-oxybis[1-chloropropane]	50 ug/mL
							2,3,4,6-Tetrachlorophenol	50 ug/mL
							2,4,5-Trichlorophenol	50 ug/mL
							2,4,6-Trichlorophenol	50 ug/mL
							2,4-Dichlorophenol	50 ug/mL
							2,4-Dimethylphenol	50 ug/mL
							2,4-Dinitrophenol	100 ug/mL
							2,4-Dinitrotoluene	50 ug/mL
							2,6-Dichlorophenol	50 ug/mL
							2,6-Dinitrotoluene	50 ug/mL
							2-Chloronaphthalene	50 ug/mL
							2-Chlorophenol	50 ug/mL
							2-Methylnaphthalene	50 ug/mL
							2-Methylphenol	50 ug/mL
							2-Nitroaniline	50 ug/mL
							2-Nitrophenol	50 ug/mL
							3-Methylphenol	50 ug/mL
							3-Nitroaniline	50 ug/mL
							4,6-Dinitro-2-methylphenol	100 ug/mL
							4-Bromophenyl phenyl ether	50 ug/mL
							4-Chloro-3-methylphenol	50 ug/mL
							4-Chloroaniline	50 ug/mL
							4-Chlorophenyl phenyl ether	50 ug/mL
							4-Methylphenol	50 ug/mL

REAGENT TRACEABILITY SUMMARY

Lab Name: TestAmerica Buffalo Job No.: 480-89467-1

SDG No.:

Reagent ID	Exp Date	Prep Date	Dilutant Used	Reagent Final Volume	Parent Reagent		Analyte	Concentration
					Reagent ID	Volume Added		
							4-Nitroaniline	50 ug/mL
							4-Nitrophenol	100 ug/mL
							Acenaphthene	50 ug/mL
							Acenaphthylene	50 ug/mL
							Acetophenone	50 ug/mL
							Aniline	50 ug/mL
							Anthracene	50 ug/mL
							Azobenzene	50 ug/mL
							Benzo[a]anthracene	50 ug/mL
							Benzo[a]pyrene	50 ug/mL
							Benzo[b]fluoranthene	50 ug/mL
							Benzo[g,h,i]perylene	50 ug/mL
							Benzo[k]fluoranthene	50 ug/mL
							Benzyl alcohol	50 ug/mL
							Bis(2-chloroethoxy)methane	50 ug/mL
							Bis(2-chloroethyl)ether	50 ug/mL
							Bis(2-ethylhexyl) phthalate	50 ug/mL
							Butyl benzyl phthalate	50 ug/mL
							Carbazole	50 ug/mL
							Chrysene	50 ug/mL
							Di-n-butyl phthalate	50 ug/mL
							Di-n-octyl phthalate	50 ug/mL
							Dibenz(a,h)anthracene	50 ug/mL
							Dibenzofuran	50 ug/mL
							Diethyl phthalate	50 ug/mL
							Dimethyl phthalate	50 ug/mL
							Diphenylamine	85.5 ug/mL
							Fluoranthene	50 ug/mL
							Fluorene	50 ug/mL
							Hexachlorobenzene	50 ug/mL
							Hexachlorobutadiene	50 ug/mL
							Hexachlorocyclopentadiene	50 ug/mL
							Hexachloroethane	50 ug/mL
							Hexadecane	50 ug/mL
							Indeno[1,2,3-cd]pyrene	50 ug/mL
							Isophorone	50 ug/mL
							n-Decane	50 ug/mL
							N-Nitrosodi-n-propylamine	50 ug/mL
							N-Nitrosodimethylamine	100 ug/mL
							N-Nitrosodiphenylamine	100 ug/mL
							n-Octadecane	50 ug/mL
							Naphthalene	50 ug/mL
							Nitrobenzene	50 ug/mL
							Pentachlorophenol	100 ug/mL
							Phenanthrene	50 ug/mL
							Phenol	50 ug/mL
							Pyrene	50 ug/mL
							Pyridine	50 ug/mL

REAGENT TRACEABILITY SUMMARY

Lab Name: TestAmerica Buffalo Job No.: 480-89467-1

SDG No.:

Reagent ID	Exp Date	Prep Date	Dilutant Used	Reagent Final Volume	Parent Reagent		Analyte	Concentration
					Reagent ID	Volume Added		
..8270 List 1/S_00005	01/27/17		Restek, Lot A0112567		(Purchased Reagent)		3,3'-Dichlorobenzidine	2000 ug/mL
							Benzidine	2000 ug/mL
..8270 List1/10_00004	08/31/16		Restek, Lot A0108988		(Purchased Reagent)		Benzoic acid	2000 ug/mL
							Indene	2000 ug/mL
..8270 list1/11_00005	08/31/16		Restek, Lot A0108989		(Purchased Reagent)		Atrazine	2000 ug/mL
							Benzaldehyde	2000 ug/mL
							Caprolactam	2000 ug/mL
..O_8270MegaMix_00027	12/27/16		Restek, Lot A0111934		(Purchased Reagent)		1,1'-Biphenyl	1000 ug/mL
							1,2,4,5-Tetrachlorobenzene	1000 ug/mL
							1,2,4-Trichlorobenzene	1000 ug/mL
							1,2-Dichlorobenzene	1000 ug/mL
							1,3-Dichlorobenzene	1000 ug/mL
							1,3-Dinitrobenzene	1000 ug/mL
							1,4-Dichlorobenzene	1000 ug/mL
							1,4-Dioxane	1000 ug/mL
							1-Methylnaphthalene	1000 ug/mL
							2,2'-oxybis[1-chloropropane]	1000 ug/mL
							2,3,4,6-Tetrachlorophenol	1000 ug/mL
							2,4,5-Trichlorophenol	1000 ug/mL
							2,4,6-Trichlorophenol	1000 ug/mL
							2,4-Dichlorophenol	1000 ug/mL
							2,4-Dimethylphenol	1000 ug/mL
							2,4-Dinitrophenol	2000 ug/mL
							2,4-Dinitrotoluene	1000 ug/mL
							2,6-Dichlorophenol	1000 ug/mL
							2,6-Dinitrotoluene	1000 ug/mL
							2-Chloronaphthalene	1000 ug/mL
							2-Chlorophenol	1000 ug/mL
							2-Methylnaphthalene	1000 ug/mL
							2-Methylphenol	1000 ug/mL
							2-Nitroaniline	1000 ug/mL
							2-Nitrophenol	1000 ug/mL
							3-Methylphenol	1000 ug/mL
							3-Nitroaniline	1000 ug/mL
							4,6-Dinitro-2-methylphenol	2000 ug/mL
							4-Bromophenyl phenyl ether	1000 ug/mL
							4-Chloro-3-methylphenol	1000 ug/mL
							4-Chloroaniline	1000 ug/mL
							4-Chlorophenyl phenyl ether	1000 ug/mL
							4-Methylphenol	1000 ug/mL
							4-Nitroaniline	1000 ug/mL
							4-Nitrophenol	2000 ug/mL
							Acenaphthene	1000 ug/mL
							Acenaphthylene	1000 ug/mL
							Acetophenone	1000 ug/mL
							Aniline	1000 ug/mL
							Anthracene	1000 ug/mL
							Azobenzene	1000 ug/mL

REAGENT TRACEABILITY SUMMARY

Lab Name: TestAmerica Buffalo Job No.: 480-89467-1

SDG No.:

Reagent ID	Exp Date	Prep Date	Dilutant Used	Reagent Final Volume	Parent Reagent		Analyte	Concentration
					Reagent ID	Volume Added		
							Benzo[a]anthracene	1000 ug/mL
							Benzo[a]pyrene	1000 ug/mL
							Benzo[b]fluoranthene	1000 ug/mL
							Benzo[g,h,i]perylene	1000 ug/mL
							Benzo[k]fluoranthene	1000 ug/mL
							Benzyl alcohol	1000 ug/mL
							Bis(2-chloroethoxy)methane	1000 ug/mL
							Bis(2-chloroethyl)ether	1000 ug/mL
							Bis(2-ethylhexyl) phthalate	1000 ug/mL
							Butyl benzyl phthalate	1000 ug/mL
							Carbazole	1000 ug/mL
							Chrysene	1000 ug/mL
							Di-n-butyl phthalate	1000 ug/mL
							Di-n-octyl phthalate	1000 ug/mL
							Dibenz(a,h)anthracene	1000 ug/mL
							Dibenzofuran	1000 ug/mL
							Diethyl phthalate	1000 ug/mL
							Dimethyl phthalate	1000 ug/mL
							Diphenylamine	1710 ug/mL
							Fluoranthene	1000 ug/mL
							Fluorene	1000 ug/mL
							Hexachlorobenzene	1000 ug/mL
							Hexachlorobutadiene	1000 ug/mL
							Hexachlorocyclopentadiene	1000 ug/mL
							Hexachloroethane	1000 ug/mL
							Hexadecane	1000 ug/mL
							Indeno[1,2,3-cd]pyrene	1000 ug/mL
							Isophorone	1000 ug/mL
							n-Decane	1000 ug/mL
							N-Nitrosodi-n-propylamine	1000 ug/mL
							N-Nitrosodimethylamine	2000 ug/mL
							N-Nitrosodiphenylamine	2000 ug/mL
							n-Octadecane	1000 ug/mL
							Naphthalene	1000 ug/mL
							Nitrobenzene	1000 ug/mL
							Pentachlorophenol	2000 ug/mL
							Phenanthrene	1000 ug/mL
							Phenol	1000 ug/mL
							Pyrene	1000 ug/mL
							Pyridine	1000 ug/mL
O_8270LLsurr_00034	04/26/16	10/26/15	Methanol, Lot 2976711	1000 mL	O_8270surr_st_00001	1.6 mL	2,4,6 - Tribromophenol	8 ug/mL
							2,4,6-Tribromophenol	8 ug/mL
							2-Fluorobiphenyl	8 ug/mL
							2-Fluorophenol	8 ug/mL
							Nitrobenzene-d5 (Surr)	8 ug/mL
							p-Terphenyl-d14 (Surr)	8 ug/mL
							Phenol-d5	8 ug/mL

REAGENT TRACEABILITY SUMMARY

Lab Name: TestAmerica Buffalo Job No.: 480-89467-1

SDG No.:

Reagent ID	Exp Date	Prep Date	Dilutant Used	Reagent Final Volume	Parent Reagent		Analyte	Concentration
					Reagent ID	Volume Added		
							Terphenyl-d14	8 ug/mL
.O_8270surr_st_00001	02/28/18		Restek, Lot A093638		(Purchased Reagent)		2,4,6 - Tribromophenol	5000 ug/mL
							2,4,6-Tribromophenol	5000 ug/mL
							2-Fluorobiphenyl	5000 ug/mL
							2-Fluorophenol	5000 ug/mL
							Nitrobenzene-d5 (Surr)	5000 ug/mL
							p-Terphenyl-d14 (Surr)	5000 ug/mL
							Phenol-d5	5000 ug/mL
							Terphenyl-d14	5000 ug/mL
O_8270surr_00036	04/30/16	10/30/15	ACETONE, Lot 3032536	1000 mL	O_8270sur_stk_00004	10 mL	2,4,6-Tribromophenol	40 ug/mL
							2-Fluorobiphenyl	40 ug/mL
							2-Fluorophenol	40 ug/mL
							Nitrobenzene-d5 (Surr)	40 ug/mL
							p-Terphenyl-d14 (Surr)	40 ug/mL
							Phenol-d5	40 ug/mL
.O_8270sur_stk_00004	09/30/18		Ultra, Lot CM-4519		(Purchased Reagent)		2,4,6-Tribromophenol	4000 ug/mL
							2-Fluorobiphenyl	4000 ug/mL
							2-Fluorophenol	4000 ug/mL
							Nitrobenzene-d5 (Surr)	4000 ug/mL
							p-Terphenyl-d14 (Surr)	4000 ug/mL
							Phenol-d5	4000 ug/mL

Certification Summary

Client: U.S. Army Construction Engineering Resea
Project/Site: Cerl Gasifier - Research Project

TestAmerica Job ID: 480-89467-1

Laboratory	Authority	Program	EPA Region	Certification ID
TestAmerica Buffalo	California	State Program	9	1169CA
TestAmerica Buffalo	Connecticut	State Program	1	PH-0568
TestAmerica Buffalo	Florida	NELAP	4	E87672
TestAmerica Buffalo	Georgia	State Program	4	956
TestAmerica Buffalo	Georgia	State Program	4	N/A
TestAmerica Buffalo	Illinois	NELAP	5	200003
TestAmerica Buffalo	Iowa	State Program	7	374
TestAmerica Buffalo	Kansas	NELAP	7	E-10187
TestAmerica Buffalo	Kentucky (DW)	State Program	4	90029
TestAmerica Buffalo	Kentucky (UST)	State Program	4	30
TestAmerica Buffalo	Kentucky (WW)	State Program	4	90029
TestAmerica Buffalo	Louisiana	NELAP	6	02031
TestAmerica Buffalo	Maine	State Program	1	NY00044
TestAmerica Buffalo	Maryland	State Program	3	294
TestAmerica Buffalo	Massachusetts	State Program	1	M-NY044
TestAmerica Buffalo	Michigan	State Program	5	9937
TestAmerica Buffalo	Minnesota	NELAP	5	036-999-337
TestAmerica Buffalo	New Hampshire	NELAP Primary AB	1	2973
TestAmerica Buffalo	New Hampshire	NELAP Secondary AB	1	2337
TestAmerica Buffalo	New Jersey	NELAP	2	NY455
TestAmerica Buffalo	New York	NELAP	2	10026
TestAmerica Buffalo	North Dakota	State Program	8	R-176
TestAmerica Buffalo	Oklahoma	State Program	6	9421
TestAmerica Buffalo	Oregon	NELAP	10	NY200003
TestAmerica Buffalo	Pennsylvania	NELAP	3	68-00281
TestAmerica Buffalo	Rhode Island	State Program	1	LAO00328
TestAmerica Buffalo	Tennessee	State Program	4	TN02970
TestAmerica Buffalo	Texas	NELAP	6	T104704412-15-6
TestAmerica Buffalo	USDA	Federal		P330-11-00386
TestAmerica Buffalo	Virginia	NELAP	3	460185
TestAmerica Buffalo	Washington	State Program	10	C784
TestAmerica Buffalo	West Virginia DEP	State Program	3	252
TestAmerica Buffalo	Wisconsin	State Program	5	998310390

Accreditation may not be offered or required for all methods and analytes reported in this package. Please contact your project manager for the laboratory's current list of certified methods and analytes.

Method 8270D

Semivolatile Organic Compounds (GC/MS) by Method 8270D

FORM II
GC/MS SEMI VOA SURROGATE RECOVERY

Lab Name: TestAmerica Buffalo Job No.: 480-89467-1

SDG No.:

Matrix: Waste Level: Low

GC Column (1): RXI-5Sil MS ID: 0.25(mm)

Client Sample ID	Lab Sample ID	NBZ #	FBP #	TPH #
OS-01-031815-1530	480-89467-14	65	94	94
OS-01-042415-1600	480-89467-15	88	102	101
OS-01-042815-1600	480-89467-16	0 X	83	81
OS-01-050715-1630	480-89467-17	94	97	103
OS-01-101514-0910	480-89467-22	0 X	73	78
	MB 480-273073/1-A	86	98	99
	LCS 480-273073/2-A	79	93	102
	LCSD 480-273073/3-A	82	93	96

	QC LIMITS
NBZ = Nitrobenzene-d5 (Surr)	34-132
FBP = 2-Fluorobiphenyl	37-120
TPH = p-Terphenyl-d14 (Surr)	65-153

Column to be used to flag recovery values

FORM II 8270D

FORM II
GC/MS SEMI VOA SURROGATE RECOVERY

Lab Name: TestAmerica Buffalo Job No.: 480-89467-1

SDG No.:

Matrix: Water Level: Low

GC Column (1): RXI-5Sil MS ID: 0.25(mm)

Client Sample ID	Lab Sample ID	NBZ	#	FBP	#	TPH	#
WW-02-030515-1557	480-89467-2	152	X	101		76	
WW-01-030515-1352	480-89467-5	76		91		73	
WW-01-042815-1600	480-89467-6	106		106		85	
WW-01-042815-1600 DL	480-89467-6 DL	0	X	99		104	
WW-01-050715-1600	480-89467-8	0	X	98		72	
WW-01-050715-1600 DL	480-89467-8 DL	0	X	87		76	
P-01-030515-1557	480-89467-10	0	X	81		67	
P-01-051315-1530	480-89467-13	0	X	95		83	
P-01-101514-0910	480-89467-18	0	X	93		74	
P-01-100814-1120	480-89467-19	0	X	94		98	
P-01-013015-0915	480-89467-20	0	X	118		65	X
P-01-013015-0915 DL	480-89467-20 DL	0	X	89		72	
	MB 480-273586/1-A	82		86		99	
	LCS 480-273586/2-A	83		83		98	

	QC LIMITS
NBZ = Nitrobenzene-d5 (Surr)	46-120
FBP = 2-Fluorobiphenyl	48-120
TPH = p-Terphenyl-d14 (Surr)	67-150

Column to be used to flag recovery values

FORM II 8270D

FORM III
GC/MS SEMI VOA LAB CONTROL SAMPLE RECOVERY

Lab Name: TestAmerica Buffalo Job No.: 480-89467-1

SDG No.:

Matrix: Waste Level: Low Lab File ID: X009014106.D

Lab ID: LCS 480-273073/2-A Client ID:

COMPOUND	SPIKE ADDED (ug/Kg)	LCS CONCENTRATION (ug/Kg)	LCS % REC	QC LIMITS REC	#
Acenaphthene	500000	460000	92	53-120	
Acenaphthylene	500000	453000	91	58-121	
Anthracene	500000	517000	103	62-129	
Benzo[a]anthracene	500000	502000	100	65-133	
Benzo[a]pyrene	500000	497000	99	64-127	
Benzo[b]fluoranthene	500000	488000	98	64-135	
Benzo[g,h,i]perylene	500000	508000	102	50-152	
Benzo[k]fluoranthene	500000	514000	103	58-138	
Chrysene	500000	492000	98	64-131	
Dibenz(a,h)anthracene	500000	506000	101	54-148	
Fluoranthene	500000	503000	101	62-131	
Fluorene	500000	483000	97	63-126	
Indeno[1,2,3-cd]pyrene	500000	505000	101	56-149	
Naphthalene	500000	438000	88	46-120	
Phenanthrene	500000	518000	104	60-130	
Pyrene	500000	516000	103	51-133	

Column to be used to flag recovery and RPD values

FORM III 8270D

FORM III
GC/MS SEMI VOA LAB CONTROL SAMPLE RECOVERY

Lab Name: TestAmerica Buffalo Job No.: 480-89467-1

SDG No.:

Matrix: Water Level: Low Lab File ID: V54276.D

Lab ID: LCS 480-273586/2-A Client ID:

COMPOUND	SPIKE ADDED (ug/L)	LCS CONCENTRATION (ug/L)	LCS % REC	QC LIMITS REC	#
Acenaphthene	16.0	14.5	91	60-120	
Acenaphthylene	16.0	14.7	92	63-120	
Anthracene	16.0	14.8	92	58-148	
Benzo[a]anthracene	16.0	15.0	94	55-151	
Benzo[a]pyrene	16.0	14.5	90	60-145	
Benzo[b]fluoranthene	16.0	14.5	91	54-140	
Benzo[g,h,i]perylene	16.0	17.1	107	66-152	
Benzo[k]fluoranthene	16.0	14.4	90	51-153	
Chrysene	16.0	15.0	93	69-140	
Dibenz(a,h)anthracene	16.0	15.9	99	57-148	
Fluoranthene	16.0	15.4	96	55-147	
Fluorene	16.0	15.0	94	55-143	
Indeno[1,2,3-cd]pyrene	16.0	15.8	99	69-146	
Naphthalene	16.0	12.8	80	35-130	
Phenanthrene	16.0	14.9	93	57-147	
Pyrene	16.0	15.5	97	58-136	

Column to be used to flag recovery and RPD values

FORM III 8270D

FORM III
GC/MS SEMI VOA LAB CONTROL SAMPLE DUPLICATE RECOVERY

Lab Name: TestAmerica Buffalo Job No.: 480-89467-1

SDG No.:

Matrix: Waste Level: Low Lab File ID: X009014107.D

Lab ID: LCSD 480-273073/3-A Client ID:

COMPOUND	SPIKE ADDED (ug/Kg)	LCSD CONCENTRATION (ug/Kg)	LCSD % REC	% RPD	QC LIMITS RPD	QC LIMITS REC	#
Acenaphthene	500000	455000	91	1	35	53-120	
Acenaphthylene	500000	452000	90	0	18	58-121	
Anthracene	500000	492000	98	5	15	62-129	
Benzo[a]anthracene	500000	469000	94	7	15	65-133	
Benzo[a]pyrene	500000	471000	94	5	15	64-127	
Benzo[b]fluoranthene	500000	466000	93	5	15	64-135	
Benzo[g,h,i]perylene	500000	482000	96	5	15	50-152	
Benzo[k]fluoranthene	500000	491000	98	5	22	58-138	
Chrysene	500000	467000	93	5	15	64-131	
Dibenz(a,h)anthracene	500000	481000	96	5	15	54-148	
Fluoranthene	500000	486000	97	3	15	62-131	
Fluorene	500000	469000	94	3	15	63-126	
Indeno[1,2,3-cd]pyrene	500000	474000	95	6	15	56-149	
Naphthalene	500000	428000	86	2	29	46-120	
Phenanthrene	500000	495000	99	5	15	60-130	
Pyrene	500000	478000	96	8	35	51-133	

Column to be used to flag recovery and RPD values

FORM III 8270D

FORM IV
GC/MS SEMI VOA METHOD BLANK SUMMARY

Lab Name: TestAmerica Buffalo Job No.: 480-89467-1

SDG No.:

Lab File ID: X009014105.D Lab Sample ID: MB 480-273073/1-A

Matrix: Waste Date Extracted: 11/04/2015 13:45

Instrument ID: HP5973X Date Analyzed: 11/05/2015 15:13

Level:(Low/Med) Low

THIS METHOD BLANK APPLIES TO THE FOLLOWING SAMPLES:

CLIENT SAMPLE ID	LAB SAMPLE ID	LAB FILE ID	DATE ANALYZED
	LCS 480-273073/2-A	X009014106.D	11/05/2015 15:40
	LCSD 480-273073/3-A	X009014107.D	11/05/2015 16:07
OS-01-031815-1530	480-89467-14	X009014108.D	11/05/2015 16:34
OS-01-042415-1600	480-89467-15	X009014109.D	11/05/2015 17:01
OS-01-042815-1600	480-89467-16	X009014110.D	11/05/2015 17:28
OS-01-050715-1630	480-89467-17	X009014111.D	11/05/2015 17:55
OS-01-101514-0910	480-89467-22	X009014112.D	11/05/2015 18:21

FORM IV
GC/MS SEMI VOA METHOD BLANK SUMMARY

Lab Name: TestAmerica Buffalo Job No.: 480-89467-1

SDG No.:

Lab File ID: V54275.D Lab Sample ID: MB 480-273586/1-A

Matrix: Water Date Extracted: 11/06/2015 12:33

Instrument ID: HP5973V Date Analyzed: 11/09/2015 14:26

Level:(Low/Med) Low

THIS METHOD BLANK APPLIES TO THE FOLLOWING SAMPLES:

CLIENT SAMPLE ID	LAB SAMPLE ID	LAB FILE ID	DATE ANALYZED
	LCS 480-273586/2-A	V54276.D	11/09/2015 14:56
WW-02-030515-1557	480-89467-2	V60015.D	11/10/2015 17:23
WW-01-030515-1352	480-89467-5	V60016.D	11/10/2015 17:52
WW-01-042815-1600	480-89467-6	V60017.D	11/10/2015 18:21
WW-01-050715-1600	480-89467-8	V60018.D	11/10/2015 18:50
P-01-030515-1557	480-89467-10	V60019.D	11/10/2015 19:19
P-01-051315-1530	480-89467-13	V60020.D	11/10/2015 19:48
P-01-101514-0910	480-89467-18	V60021.D	11/10/2015 20:17
P-01-100814-1120	480-89467-19	V60022.D	11/10/2015 20:46
P-01-013015-0915	480-89467-20	V60023.D	11/10/2015 21:15
WW-01-042815-1600 DL	480-89467-6 DL	V60046.D	11/11/2015 13:47
WW-01-050715-1600 DL	480-89467-8 DL	V60047.D	11/11/2015 14:16
P-01-013015-0915 DL	480-89467-20 DL	V60048.D	11/11/2015 14:45

FORM V
GC/MS SEMI VOA INSTRUMENT PERFORMANCE CHECK
DECAFLUOROTRIPHENYLPHOSPHINE (DFTPP)

Lab Name: TestAmerica Buffalo Job No.: 480-89467-1

SDG No.:

Lab File ID: V53779.D DFTPP Injection Date: 10/26/2015

Instrument ID: HP5973V DFTPP Injection Time: 19:07

Analysis Batch No.: 271208

M/E	ION ABUNDANCE CRITERIA	% RELATIVE ABUNDANCE	
51	10-80% of Base Peak	47.1	
68	Less than 2% of mass 69	0.1	(0.3)1
69	Mass 69 Relative abundance	38.5	
70	Less than 2% of mass 69	0.2	(0.6)1
127	10-80% of Base Peak	50.8	
197	Less than 2% of mass 198	0.0	
198	Base peak	100.0	
199	5-9% of mass 198	6.8	
275	10-60% of Base Peak	29.9	
365	Greater than 1% of mass 198	4.4	
441	present but less than 24% of mass 442	21.9	(15.0)2
442	Greater than 50% of mass 198	145.7	
443	15-24% of mass 442	29.3	(20.1)2

1-Value is % mass 69 2-Value is % mass 442

THIS CHECK APPLIES TO THE FOLLOWING SAMPLES, MS, MSD, BLANKS AND STANDARDS:

CLIENT SAMPLE ID	LAB SAMPLE ID	LAB FILE ID	DATE ANALYZED	TIME ANALYZED
	IC 480-271208/3	V53780.D	10/26/2015	19:36
	IC 480-271208/4	V53781.D	10/26/2015	20:05
	IC 480-271208/5	V53782.D	10/26/2015	20:35
	ICIS 480-271208/6	V53783.D	10/26/2015	21:04
	IC 480-271208/7	V53784.D	10/26/2015	21:33
	IC 480-271208/8	V53785.D	10/26/2015	22:02
	IC 480-271208/9	V53786.D	10/26/2015	22:31

FORM V
GC/MS SEMI VOA INSTRUMENT PERFORMANCE CHECK
DECAFLUOROTRIPHENYLPHOSPHINE (DFTPP)

Lab Name: TestAmerica Buffalo Job No.: 480-89467-1

SDG No.:

Lab File ID: V54271.D DFTPP Injection Date: 11/09/2015

Instrument ID: HP5973V DFTPP Injection Time: 12:27

Analysis Batch No.: 273910

M/E	ION ABUNDANCE CRITERIA	% RELATIVE ABUNDANCE	
51	10-80% of Base Peak	54.9	
68	Less than 2% of mass 69	0.8	(1.9)1
69	Mass 69 Relative abundance	41.4	
70	Less than 2% of mass 69	0.1	(0.3)1
127	10-80% of Base Peak	49.8	
197	Less than 2% of mass 198	0.0	
198	Base peak	100.0	
199	5-9% of mass 198	6.9	
275	10-60% of Base Peak	32.2	
365	Greater than 1% of mass 198	5.7	
441	present but less than 24% of mass 442	26.7	(15.2)2
442	Greater than 50% of mass 198	176.1	
443	15-24% of mass 442	34.3	(19.5)2

1-Value is % mass 69 2-Value is % mass 442

THIS CHECK APPLIES TO THE FOLLOWING SAMPLES, MS, MSD, BLANKS AND STANDARDS:

CLIENT SAMPLE ID	LAB SAMPLE ID	LAB FILE ID	DATE ANALYZED	TIME ANALYZED
	CCVIS 480-273910/3	V54272.D	11/09/2015	12:57
	MB 480-273586/1-A	V54275.D	11/09/2015	14:26
	LCS 480-273586/2-A	V54276.D	11/09/2015	14:56

FORM V
GC/MS SEMI VOA INSTRUMENT PERFORMANCE CHECK
DECAFLUOROTRIPHENYLPHOSPHINE (DFTPP)

Lab Name: TestAmerica Buffalo Job No.: 480-89467-1

SDG No.:

Lab File ID: V60001.D DFTPP Injection Date: 11/10/2015

Instrument ID: HP5973V DFTPP Injection Time: 10:38

Analysis Batch No.: 273999

M/E	ION ABUNDANCE CRITERIA	% RELATIVE ABUNDANCE	
51	10-80% of Base Peak	58.4	
68	Less than 2% of mass 69	0.2	(0.4)1
69	Mass 69 Relative abundance	44.4	
70	Less than 2% of mass 69	0.1	(0.3)1
127	10-80% of Base Peak	53.4	
197	Less than 2% of mass 198	0.0	
198	Base peak	100.0	
199	5-9% of mass 198	6.5	
275	10-60% of Base Peak	33.1	
365	Greater than 1% of mass 198	5.4	
441	present but less than 24% of mass 442	24.4	(15.0)2
442	Greater than 50% of mass 198	162.5	
443	15-24% of mass 442	31.6	(19.4)2

1-Value is % mass 69 2-Value is % mass 442

THIS CHECK APPLIES TO THE FOLLOWING SAMPLES, MS, MSD, BLANKS AND STANDARDS:

CLIENT SAMPLE ID	LAB SAMPLE ID	LAB FILE ID	DATE ANALYZED	TIME ANALYZED
	CCVIS 480-273999/3	V60002.D	11/10/2015	11:07
WW-02-030515-1557	480-89467-2	V60015.D	11/10/2015	17:23
WW-01-030515-1352	480-89467-5	V60016.D	11/10/2015	17:52
WW-01-042815-1600	480-89467-6	V60017.D	11/10/2015	18:21
WW-01-050715-1600	480-89467-8	V60018.D	11/10/2015	18:50
P-01-030515-1557	480-89467-10	V60019.D	11/10/2015	19:19
P-01-051315-1530	480-89467-13	V60020.D	11/10/2015	19:48
P-01-101514-0910	480-89467-18	V60021.D	11/10/2015	20:17
P-01-100814-1120	480-89467-19	V60022.D	11/10/2015	20:46
P-01-013015-0915	480-89467-20	V60023.D	11/10/2015	21:15

FORM V
GC/MS SEMI VOA INSTRUMENT PERFORMANCE CHECK
DECAFLUOROTRIPHENYLPHOSPHINE (DFTPP)

Lab Name: TestAmerica Buffalo Job No.: 480-89467-1

SDG No.:

Lab File ID: V60043.D DFTPP Injection Date: 11/11/2015

Instrument ID: HP5973V DFTPP Injection Time: 12:20

Analysis Batch No.: 274392

M/E	ION ABUNDANCE CRITERIA	% RELATIVE ABUNDANCE	
51	10-80% of Base Peak	60.4	
68	Less than 2% of mass 69	0.0	(0.0)1
69	Mass 69 Relative abundance	47.7	
70	Less than 2% of mass 69	0.4	(0.9)1
127	10-80% of Base Peak	54.1	
197	Less than 2% of mass 198	0.4	
198	Base peak	100.0	
199	5-9% of mass 198	6.3	
275	10-60% of Base Peak	30.3	
365	Greater than 1% of mass 198	5.6	
441	present but less than 24% of mass 442	23.1	(15.6)2
442	Greater than 50% of mass 198	148.1	
443	15-24% of mass 442	30.0	(20.3)2

1-Value is % mass 69 2-Value is % mass 442

THIS CHECK APPLIES TO THE FOLLOWING SAMPLES, MS, MSD, BLANKS AND STANDARDS:

CLIENT SAMPLE ID	LAB SAMPLE ID	LAB FILE ID	DATE ANALYZED	TIME ANALYZED
	CCVIS 480-274392/3	V60044.D	11/11/2015	12:49
WW-01-042815-1600 DL	480-89467-6 DL	V60046.D	11/11/2015	13:47
WW-01-050715-1600 DL	480-89467-8 DL	V60047.D	11/11/2015	14:16
P-01-013015-0915 DL	480-89467-20 DL	V60048.D	11/11/2015	14:45

FORM V
GC/MS SEMI VOA INSTRUMENT PERFORMANCE CHECK
DECAFLUOROTRIPHENYLPHOSPHINE (DFTPP)

Lab Name: TestAmerica Buffalo Job No.: 480-89467-1

SDG No.:

Lab File ID: X009013898.D DFTPP Injection Date: 10/23/2015

Instrument ID: HP5973X DFTPP Injection Time: 08:06

Analysis Batch No.: 270613

M/E	ION ABUNDANCE CRITERIA	% RELATIVE ABUNDANCE	
51	10-80% of Base Peak	39.9	
68	Less than 2% of mass 69	0.0	(0.0)1
69	Mass 69 Relative abundance	38.7	
70	Less than 2% of mass 69	0.1	(0.3)1
127	10-80% of Base Peak	47.6	
197	Less than 2% of mass 198	0.0	
198	Base peak	100.0	
199	5-9% of mass 198	6.6	
275	10-60% of Base Peak	24.2	
365	Greater than 1% of mass 198	3.1	
441	present but less than 24% of mass 442	11.3	(15.1)2
442	Greater than 50% of mass 198	74.7	
443	15-24% of mass 442	15.1	(20.2)2

1-Value is % mass 69 2-Value is % mass 442

THIS CHECK APPLIES TO THE FOLLOWING SAMPLES, MS, MSD, BLANKS AND STANDARDS:

CLIENT SAMPLE ID	LAB SAMPLE ID	LAB FILE ID	DATE ANALYZED	TIME ANALYZED
	IC 480-270613/3	X009013899.D	10/23/2015	08:33
	IC 480-270613/4	X009013900.D	10/23/2015	09:00
	ICIS 480-270613/5	X009013901.D	10/23/2015	09:27
	IC 480-270613/6	X009013902.D	10/23/2015	09:54
	IC 480-270613/7	X009013903.D	10/23/2015	10:21
	IC 480-270613/8	X009013904.D	10/23/2015	10:48

FORM V
GC/MS SEMI VOA INSTRUMENT PERFORMANCE CHECK
DECAFLUOROTRIPHENYLPHOSPHINE (DFTPP)

Lab Name: TestAmerica Buffalo Job No.: 480-89467-1

SDG No.:

Lab File ID: X009014094.D DFTPP Injection Date: 11/05/2015

Instrument ID: HP5973X DFTPP Injection Time: 10:14

Analysis Batch No.: 273506

M/E	ION ABUNDANCE CRITERIA	% RELATIVE ABUNDANCE	
51	10-80% of Base Peak	35.8	
68	Less than 2% of mass 69	0.0	(0.0)1
69	Mass 69 Relative abundance	38.1	
70	Less than 2% of mass 69	0.1	(0.2)1
127	10-80% of Base Peak	48.6	
197	Less than 2% of mass 198	0.3	
198	Base peak	100.0	
199	5-9% of mass 198	7.3	
275	10-60% of Base Peak	26.9	
365	Greater than 1% of mass 198	2.6	
441	present but less than 24% of mass 442	13.4	(15.9)2
442	Greater than 50% of mass 198	84.2	
443	15-24% of mass 442	16.0	(19.0)2

1-Value is % mass 69 2-Value is % mass 442

THIS CHECK APPLIES TO THE FOLLOWING SAMPLES, MS, MSD, BLANKS AND STANDARDS:

CLIENT SAMPLE ID	LAB SAMPLE ID	LAB FILE ID	DATE ANALYZED	TIME ANALYZED
	CCVIS 480-273506/3	X009014095.D	11/05/2015	10:42
	MB 480-273073/1-A	X009014105.D	11/05/2015	15:13
	LCS 480-273073/2-A	X009014106.D	11/05/2015	15:40
	LCSD 480-273073/3-A	X009014107.D	11/05/2015	16:07
OS-01-031815-1530	480-89467-14	X009014108.D	11/05/2015	16:34
OS-01-042415-1600	480-89467-15	X009014109.D	11/05/2015	17:01
OS-01-042815-1600	480-89467-16	X009014110.D	11/05/2015	17:28
OS-01-050715-1630	480-89467-17	X009014111.D	11/05/2015	17:55
OS-01-101514-0910	480-89467-22	X009014112.D	11/05/2015	18:21

FORM VIII
GC/MS SEMI VOA INTERNAL STANDARD AREA AND RETENTION TIME SUMMARY

Lab Name: TestAmerica Buffalo Job No.: 480-89467-1

SDG No.:

Sample No.: ICIS 480-271208/6 Date Analyzed: 10/26/2015 21:04

Instrument ID: HP5973V GC Column: RXI-5Sil MS ID: 0.25(mm)

Lab File ID (Standard): V53783.D Heated Purge: (Y/N) N

Calibration ID: 25393

		DCB		NPT		ANT	
		AREA #	RT #	AREA #	RT #	AREA #	RT #
INITIAL CALIBRATION MID-POINT		149442	6.91	570099	7.99	309653	9.49
UPPER LIMIT		298884	7.41	1140198	8.49	619306	9.99
LOWER LIMIT		74721	6.41	285050	7.49	154827	8.99
LAB SAMPLE ID	CLIENT SAMPLE ID						
CCVIS 480-273910/3		95271	6.84	329442	7.93	188477	9.42
CCVIS 480-273999/3		93344	6.84	341975	7.93	195367	9.42
CCVIS 480-274392/3		119802	6.83	433077	7.91	241390	9.41

DCB = 1,4-Dichlorobenzene-d4
NPT = Naphthalene-d8
ANT = Acenaphthene-d10

Area Limit = 50%-200% of internal standard area
RT Limit = ± 0.5 minutes of internal standard RT

Column used to flag values outside QC limits

FORM VIII 8270D

FORM VIII
GC/MS SEMI VOA INTERNAL STANDARD AREA AND RETENTION TIME SUMMARY

Lab Name: TestAmerica Buffalo Job No.: 480-89467-1

SDG No.:

Sample No.: ICIS 480-271208/6 Date Analyzed: 10/26/2015 21:04

Instrument ID: HP5973V GC Column: RXI-5Sil MS ID: 0.25(mm)

Lab File ID (Standard): V53783.D Heated Purge: (Y/N) N

Calibration ID: 25393

		PHN		CRY		PRY	
		AREA #	RT #	AREA #	RT #	AREA #	RT #
INITIAL CALIBRATION MID-POINT		529481	10.76	529691	13.71	568302	16.09
UPPER LIMIT		1058962	11.26	1059382	14.21	1136604	16.59
LOWER LIMIT		264741	10.26	264846	13.21	284151	15.59
LAB SAMPLE ID	CLIENT SAMPLE ID						
CCVIS 480-273910/3		341426	10.69	355683	13.60	404913	15.95
CCVIS 480-273999/3		351985	10.69	378577	13.60	408130	15.96
CCVIS 480-274392/3		432245	10.68	455083	13.59	514291	15.94

PHN = Phenanthrene-d10
CRY = Chrysene-d12
PRY = Perylene-d12

Area Limit = 50%-200% of internal standard area
RT Limit = ± 0.5 minutes of internal standard RT

Column used to flag values outside QC limits

FORM VIII 8270D

FORM VIII
GC/MS SEMI VOA INTERNAL STANDARD AREA AND RETENTION TIME SUMMARY

Lab Name: TestAmerica Buffalo Job No.: 480-89467-1

SDG No.:

Sample No.: CCVIS 480-273910/3 Date Analyzed: 11/09/2015 12:57

Instrument ID: HP5973V GC Column: RXI-5Sil MS ID: 0.25(mm)

Lab File ID (Standard): V54272.D Heated Purge: (Y/N) N

Calibration ID: 25512

		DCB		NPT		ANT	
		AREA #	RT #	AREA #	RT #	AREA #	RT #
12/24 HOUR STD		95271	6.84	329442	7.93	188477	9.42
UPPER LIMIT		190542	7.34	658884	8.43	376954	9.92
LOWER LIMIT		47636	6.34	164721	7.43	94239	8.92
LAB SAMPLE ID	CLIENT SAMPLE ID						
MB 480-273586/1-A		102514	6.84	376927	7.93	196758	9.42
LCS 480-273586/2-A		90277	6.85	309625	7.93	184829	9.42

DCB = 1,4-Dichlorobenzene-d4
NPT = Naphthalene-d8
ANT = Acenaphthene-d10

Area Limit = 50%-200% of internal standard area
RT Limit = ± 0.5 minutes of internal standard RT

Column used to flag values outside QC limits

FORM VIII 8270D

FORM VIII
GC/MS SEMI VOA INTERNAL STANDARD AREA AND RETENTION TIME SUMMARY

Lab Name: TestAmerica Buffalo Job No.: 480-89467-1

SDG No.:

Sample No.: CCVIS 480-273910/3 Date Analyzed: 11/09/2015 12:57

Instrument ID: HP5973V GC Column: RXI-5Sil MS ID: 0.25(mm)

Lab File ID (Standard): V54272.D Heated Purge: (Y/N) N

Calibration ID: 25512

		PHN		CRY		PRY	
		AREA #	RT #	AREA #	RT #	AREA #	RT #
12/24 HOUR STD		341426	10.69	355683	13.60	404913	15.95
UPPER LIMIT		682852	11.19	711366	14.10	809826	16.45
LOWER LIMIT		170713	10.19	177842	13.10	202457	15.45
LAB SAMPLE ID	CLIENT SAMPLE ID						
MB 480-273586/1-A		362667	10.69	352629	13.60	398914	15.95
LCS 480-273586/2-A		331204	10.69	334690	13.60	382997	15.95

PHN = Phenanthrene-d10
CRY = Chrysene-d12
PRY = Perylene-d12

Area Limit = 50%-200% of internal standard area
RT Limit = ± 0.5 minutes of internal standard RT

Column used to flag values outside QC limits

FORM VIII 8270D

FORM VIII
GC/MS SEMI VOA INTERNAL STANDARD AREA AND RETENTION TIME SUMMARY

Lab Name: TestAmerica Buffalo Job No.: 480-89467-1

SDG No.:

Sample No.: CCVIS 480-273999/3 Date Analyzed: 11/10/2015 11:07

Instrument ID: HP5973V GC Column: RXI-5Sil MS ID: 0.25(mm)

Lab File ID (Standard): V60002.D Heated Purge: (Y/N) N

Calibration ID: 25512

		DCB		NPT		ANT	
		AREA #	RT #	AREA #	RT #	AREA #	RT #
12/24 HOUR STD		93344	6.84	341975	7.93	195367	9.42
UPPER LIMIT		186688	7.34	683950	8.43	390734	9.92
LOWER LIMIT		46672	6.34	170988	7.43	97684	8.92
LAB SAMPLE ID	CLIENT SAMPLE ID						
480-89467-2	WW-02-030515-1557	67835	6.84	198714	7.93	138050	9.42
480-89467-5	WW-01-030515-1352	63659	6.84	232589	7.93	117556	9.42
480-89467-6	WW-01-042815-1600	66998	6.84	262688	7.93	138840	9.42
480-89467-8	WW-01-050715-1600	66266	6.84	228704	7.93	118105	9.42
480-89467-10	P-01-030515-1557	58403	6.84	201130	7.93	119172	9.42
480-89467-13	P-01-051315-1530	62927	6.84	171577	7.93	106344	9.42
480-89467-18	P-01-101514-0910	68965	6.84	265411	7.93	144724	9.42
480-89467-19	P-01-100814-1120	69294	6.84	263891	7.93	143234	9.42
480-89467-20	P-01-013015-0915	66386	6.84	283096	7.93	126756	9.42

DCB = 1,4-Dichlorobenzene-d4
NPT = Naphthalene-d8
ANT = Acenaphthene-d10

Area Limit = 50%-200% of internal standard area
RT Limit = ± 0.5 minutes of internal standard RT

Column used to flag values outside QC limits

FORM VIII 8270D

FORM VIII
GC/MS SEMI VOA INTERNAL STANDARD AREA AND RETENTION TIME SUMMARY

Lab Name: TestAmerica Buffalo Job No.: 480-89467-1

SDG No.:

Sample No.: CCVIS 480-273999/3 Date Analyzed: 11/10/2015 11:07

Instrument ID: HP5973V GC Column: RXI-5Sil MS ID: 0.25(mm)

Lab File ID (Standard): V60002.D Heated Purge: (Y/N) N

Calibration ID: 25512

		PHN		CRY		PRY	
		AREA #	RT #	AREA #	RT #	AREA #	RT #
12/24 HOUR STD		351985	10.69	378577	13.60	408130	15.96
UPPER LIMIT		703970	11.19	757154	14.10	816260	16.46
LOWER LIMIT		175993	10.19	189289	13.10	204065	15.46
LAB SAMPLE ID	CLIENT SAMPLE ID						
480-89467-2	WW-02-030515-1557	212495	10.69	219345	13.59	249628	15.95
480-89467-5	WW-01-030515-1352	231232	10.69	235769	13.59	279373	15.95
480-89467-6	WW-01-042815-1600	217134	10.69	224964	13.59	269946	15.95
480-89467-8	WW-01-050715-1600	211369	10.69	224229	13.59	257928	15.95
480-89467-10	P-01-030515-1557	264798	10.69	273051	13.59	241148	15.95
480-89467-13	P-01-051315-1530	200064	10.69	210839	13.59	237649	15.95
480-89467-18	P-01-101514-0910	252292	10.69	214554	13.59	252800	15.95
480-89467-19	P-01-100814-1120	261845	10.69	207719	13.59	243850	15.95
480-89467-20	P-01-013015-0915	189600	10.69	201516	13.60	227966	15.95

PHN = Phenanthrene-d10
CRY = Chrysene-d12
PRY = Perylene-d12

Area Limit = 50%-200% of internal standard area
RT Limit = ± 0.5 minutes of internal standard RT

Column used to flag values outside QC limits

FORM VIII 8270D

FORM VIII
GC/MS SEMI VOA INTERNAL STANDARD AREA AND RETENTION TIME SUMMARY

Lab Name: TestAmerica Buffalo Job No.: 480-89467-1

SDG No.:

Sample No.: CCVIS 480-274392/3 Date Analyzed: 11/11/2015 12:49

Instrument ID: HP5973V GC Column: RXI-5Sil MS ID: 0.25(mm)

Lab File ID (Standard): V60044.D Heated Purge: (Y/N) N

Calibration ID: 25512

		DCB		NPT		ANT	
		AREA #	RT #	AREA #	RT #	AREA #	RT #
12/24 HOUR STD		119802	6.83	433077	7.91	241390	9.41
UPPER LIMIT		239604	7.33	866154	8.41	482780	9.91
LOWER LIMIT		59901	6.33	216539	7.41	120695	8.91
LAB SAMPLE ID	CLIENT SAMPLE ID						
480-89467-6 DL	WW-01-042815-1600 DL	103932	6.83	389223	7.91	214727	9.41
480-89467-8 DL	WW-01-050715-1600 DL	98085	6.83	386503	7.91	212212	9.41
480-89467-20 DL	P-01-013015-0915 DL	106083	6.83	404412	7.91	219086	9.41

DCB = 1,4-Dichlorobenzene-d4
NPT = Naphthalene-d8
ANT = Acenaphthene-d10

Area Limit = 50%-200% of internal standard area
RT Limit = ± 0.5 minutes of internal standard RT

Column used to flag values outside QC limits

FORM VIII 8270D

FORM VIII
GC/MS SEMI VOA INTERNAL STANDARD AREA AND RETENTION TIME SUMMARY

Lab Name: TestAmerica Buffalo Job No.: 480-89467-1

SDG No.:

Sample No.: CCVIS 480-274392/3 Date Analyzed: 11/11/2015 12:49

Instrument ID: HP5973V GC Column: RXI-5Sil MS ID: 0.25(mm)

Lab File ID (Standard): V60044.D Heated Purge: (Y/N) N

Calibration ID: 25512

		PHN		CRY		PRY	
		AREA #	RT #	AREA #	RT #	AREA #	RT #
12/24 HOUR STD		432245	10.68	455083	13.59	514291	15.94
UPPER LIMIT		864490	11.18	910166	14.09	1028582	16.44
LOWER LIMIT		216123	10.18	227542	13.09	257146	15.44
LAB SAMPLE ID	CLIENT SAMPLE ID						
480-89467-6 DL	WW-01-042815-1600 DL	391748	10.68	356754	13.58	406441	15.94
480-89467-8 DL	WW-01-050715-1600 DL	357711	10.68	400746	13.58	449730	15.94
480-89467-20 DL	P-01-013015-0915 DL	393977	10.68	393209	13.58	388570	15.94

PHN = Phenanthrene-d10
CRY = Chrysene-d12
PRY = Perylene-d12

Area Limit = 50%-200% of internal standard area
RT Limit = ± 0.5 minutes of internal standard RT

Column used to flag values outside QC limits

FORM VIII 8270D

FORM VIII
GC/MS SEMI VOA INTERNAL STANDARD AREA AND RETENTION TIME SUMMARY

Lab Name: TestAmerica Buffalo Job No.: 480-89467-1

SDG No.:

Sample No.: ICIS 480-270613/5 Date Analyzed: 10/23/2015 09:27

Instrument ID: HP5973X GC Column: RXI-5Sil MS ID: 0.25(mm)

Lab File ID (Standard): X009013901.D Heated Purge: (Y/N) N

Calibration ID: 25373

		DCB		NPT		ANT	
		AREA #	RT #	AREA #	RT #	AREA #	RT #
INITIAL CALIBRATION MID-POINT		424857	6.75	1528120	8.29	835898	10.38
UPPER LIMIT		849714	7.25	3056240	8.79	1671796	10.88
LOWER LIMIT		212429	6.25	764060	7.79	417949	9.88
LAB SAMPLE ID	CLIENT SAMPLE ID						
CCVIS 480-273506/3		490767	6.83	1759373	8.35	944559	10.42

DCB = 1,4-Dichlorobenzene-d4
NPT = Naphthalene-d8
ANT = Acenaphthene-d10

Area Limit = 50%-200% of internal standard area
RT Limit = ± 0.5 minutes of internal standard RT

Column used to flag values outside QC limits

FORM VIII 8270D

FORM VIII
GC/MS SEMI VOA INTERNAL STANDARD AREA AND RETENTION TIME SUMMARY

Lab Name: TestAmerica Buffalo Job No.: 480-89467-1

SDG No.:

Sample No.: ICIS 480-270613/5 Date Analyzed: 10/23/2015 09:27

Instrument ID: HP5973X GC Column: RXI-5Sil MS ID: 0.25(mm)

Lab File ID (Standard): X009013901.D Heated Purge: (Y/N) N

Calibration ID: 25373

		PHN		CRY		PRY	
		AREA #	RT #	AREA #	RT #	AREA #	RT #
INITIAL CALIBRATION MID-POINT		1333564	11.90	1449085	14.30	1412179	15.85
UPPER LIMIT		2667128	12.40	2898170	14.80	2824358	16.35
LOWER LIMIT		666782	11.40	724543	13.80	706090	15.35
LAB SAMPLE ID	CLIENT SAMPLE ID						
CCVIS 480-273506/3		1453807	11.94	1556266	14.34	1527454	15.91

PHN = Phenanthrene-d10
CRY = Chrysene-d12
PRY = Perylene-d12

Area Limit = 50%-200% of internal standard area
RT Limit = ± 0.5 minutes of internal standard RT

Column used to flag values outside QC limits

FORM VIII 8270D

FORM VIII
GC/MS SEMI VOA INTERNAL STANDARD AREA AND RETENTION TIME SUMMARY

Lab Name: TestAmerica Buffalo Job No.: 480-89467-1

SDG No.:

Sample No.: CCVIS 480-273506/3 Date Analyzed: 11/05/2015 10:42

Instrument ID: HP5973X GC Column: RXI-5Sil MS ID: 0.25(mm)

Lab File ID (Standard): X009014095.D Heated Purge: (Y/N) N

Calibration ID: 25463

		DCB		NPT		ANT	
		AREA #	RT #	AREA #	RT #	AREA #	RT #
12/24 HOUR STD		490767	6.83	1759373	8.35	944559	10.42
UPPER LIMIT		981534	7.33	3518746	8.85	1889118	10.92
LOWER LIMIT		245384	6.33	879687	7.85	472280	9.92
LAB SAMPLE ID	CLIENT SAMPLE ID						
MB 480-273073/1-A		483013	6.83	1807441	8.35	973874	10.42
LCS 480-273073/2-A		417834	6.83	1510910	8.35	835337	10.42
LCSD 480-273073/3-A		451521	6.83	1633837	8.35	881871	10.42
480-89467-14	OS-01-031815-1530	385044	6.83	1415167	8.35	764597	10.42
480-89467-15	OS-01-042415-1600	355867	6.82	1295102	8.35	704107	10.42
480-89467-16	OS-01-042815-1600	393020	6.83	1443122	8.35	804100	10.42
480-89467-17	OS-01-050715-1630	428352	6.83	1553680	8.35	826628	10.41
480-89467-22	OS-01-101514-0910	387991	6.83	1402278	8.35	757710	10.42

DCB = 1,4-Dichlorobenzene-d4
NPT = Naphthalene-d8
ANT = Acenaphthene-d10

Area Limit = 50%-200% of internal standard area
RT Limit = ± 0.5 minutes of internal standard RT

Column used to flag values outside QC limits

FORM VIII 8270D

FORM VIII
GC/MS SEMI VOA INTERNAL STANDARD AREA AND RETENTION TIME SUMMARY

Lab Name: TestAmerica Buffalo Job No.: 480-89467-1

SDG No.:

Sample No.: CCVIS 480-273506/3 Date Analyzed: 11/05/2015 10:42

Instrument ID: HP5973X GC Column: RXI-5Sil MS ID: 0.25(mm)

Lab File ID (Standard): X009014095.D Heated Purge: (Y/N) N

Calibration ID: 25463

		PHN		CRY		PRY	
		AREA #	RT #	AREA #	RT #	AREA #	RT #
12/24 HOUR STD		1453807	11.94	1556266	14.34	1527454	15.91
UPPER LIMIT		2907614	12.44	3112532	14.84	3054908	16.41
LOWER LIMIT		726904	11.44	778133	13.84	763727	15.41
LAB SAMPLE ID	CLIENT SAMPLE ID						
MB 480-273073/1-A		1460083	11.94	1454885	14.33	1397326	15.91
LCS 480-273073/2-A		1348050	11.94	1395791	14.34	1348683	15.91
LCSD 480-273073/3-A		1422851	11.94	1521934	14.34	1448479	15.91
480-89467-14	OS-01-031815-1530	1237156	11.94	1365371	14.33	1358690	15.90
480-89467-15	OS-01-042415-1600	1132128	11.94	1193478	14.34	1195008	15.91
480-89467-16	OS-01-042815-1600	1303747	11.94	1363959	14.33	1363965	15.91
480-89467-17	OS-01-050715-1630	1336982	11.94	1424420	14.33	1371149	15.90
480-89467-22	OS-01-101514-0910	1215806	11.94	1307001	14.33	1299277	15.91

PHN = Phenanthrene-d10
CRY = Chrysene-d12
PRY = Perylene-d12

Area Limit = 50%-200% of internal standard area
RT Limit = ± 0.5 minutes of internal standard RT

Column used to flag values outside QC limits

FORM VIII 8270D

FORM I
GC/MS SEMI VOA ORGANICS ANALYSIS DATA SHEET

Lab Name: TestAmerica Buffalo
Job No.: 480-89467-1
SDG No.:
Client Sample ID: WW-02-030515-1557
Lab Sample ID: 480-89467-2
Matrix: Water
Lab File ID: V60015.D
Analysis Method: 8270D
Date Collected: 03/05/2015 15:57
Extract. Method: 3510C
Date Extracted: 11/06/2015 12:33
Sample wt/vol: 258(mL)
Date Analyzed: 11/10/2015 17:23
Con. Extract Vol.: 1(mL)
Dilution Factor: 20
Injection Volume: 2(uL)
Level: (low/med) Low
% Moisture:
GPC Cleanup:(Y/N) N
Analysis Batch No.: 273999
Units: ug/L

CAS NO.	COMPOUND NAME	RESULT	Q	RL	MDL
83-32-9	Acenaphthene	ND	H	97	7.9
208-96-8	Acenaphthylene	ND	H	97	7.4
120-12-7	Anthracene	ND	H	97	5.4
56-55-3	Benzo[a]anthracene	ND	H	97	7.0
50-32-8	Benzo[a]pyrene	ND	H	97	9.1
205-99-2	Benzo[b]fluoranthene	ND	H	97	6.6
191-24-2	Benzo[g,h,i]perylene	ND	H	97	6.8
207-08-9	Benzo[k]fluoranthene	ND	H	97	14
218-01-9	Chrysene	ND	H	97	6.4
53-70-3	Dibenz(a,h)anthracene	ND	H	97	8.1
206-44-0	Fluoranthene	ND	H	97	7.8
86-73-7	Fluorene	ND	H	97	7.0
193-39-5	Indeno[1,2,3-cd]pyrene	ND	H	97	9.1
91-20-3	Naphthalene	34	J H	97	15
85-01-8	Phenanthrene	ND	H	97	8.5
129-00-0	Pyrene	ND	H	97	6.6

CAS NO.	SURROGATE	%REC	Q	LIMITS
321-60-8	2-Fluorobiphenyl	101		48-120
4165-60-0	Nitrobenzene-d5 (Surr)	152	X	46-120
1718-51-0	p-Terphenyl-d14 (Surr)	76		67-150

FORM I
GC/MS SEMI VOA ORGANICS ANALYSIS DATA SHEET

Lab Name: TestAmerica Buffalo
Job No.: 480-89467-1
SDG No.:
Client Sample ID: WW-01-030515-1352
Lab Sample ID: 480-89467-5
Matrix: Water
Lab File ID: V60016.D
Analysis Method: 8270D
Date Collected: 03/05/2015 13:52
Extract. Method: 3510C
Date Extracted: 11/06/2015 12:33
Sample wt/vol: 258.9(mL)
Date Analyzed: 11/10/2015 17:52
Con. Extract Vol.: 1(mL)
Dilution Factor: 20
Injection Volume: 2(uL)
Level: (low/med) Low
% Moisture:
GPC Cleanup:(Y/N) N
Analysis Batch No.: 273999
Units: ug/L

CAS NO.	COMPOUND NAME	RESULT	Q	RL	MDL
83-32-9	Acenaphthene	ND	H	97	7.9
208-96-8	Acenaphthylene	ND	H	97	7.3
120-12-7	Anthracene	ND	H	97	5.4
56-55-3	Benzo[a]anthracene	ND	H	97	7.0
50-32-8	Benzo[a]pyrene	ND	H	97	9.1
205-99-2	Benzo[b]fluoranthene	ND	H	97	6.6
191-24-2	Benzo[g,h,i]perylene	ND	H	97	6.8
207-08-9	Benzo[k]fluoranthene	ND	H	97	14
218-01-9	Chrysene	ND	H	97	6.4
53-70-3	Dibenz(a,h)anthracene	ND	H	97	8.1
206-44-0	Fluoranthene	ND	H	97	7.7
86-73-7	Fluorene	ND	H	97	7.0
193-39-5	Indeno[1,2,3-cd]pyrene	ND	H	97	9.1
91-20-3	Naphthalene	15	J H	97	15
85-01-8	Phenanthrene	ND	H	97	8.5
129-00-0	Pyrene	ND	H	97	6.6

CAS NO.	SURROGATE	%REC	Q	LIMITS
321-60-8	2-Fluorobiphenyl	91		48-120
4165-60-0	Nitrobenzene-d5 (Surr)	76		46-120
1718-51-0	p-Terphenyl-d14 (Surr)	73		67-150

FORM I
GC/MS SEMI VOA ORGANICS ANALYSIS DATA SHEET

Lab Name: TestAmerica Buffalo
Job No.: 480-89467-1
SDG No.:
Client Sample ID: WW-01-042815-1600
Lab Sample ID: 480-89467-6
Matrix: Water
Lab File ID: V60017.D
Analysis Method: 8270D
Date Collected: 04/28/2015 16:00
Extract. Method: 3510C
Date Extracted: 11/06/2015 12:33
Sample wt/vol: 259.7(mL)
Date Analyzed: 11/10/2015 18:21
Con. Extract Vol.: 1(mL)
Dilution Factor: 20
Injection Volume: 2(uL)
Level: (low/med) Low
% Moisture:
GPC Cleanup:(Y/N) N
Analysis Batch No.: 273999
Units: ug/L

CAS NO.	COMPOUND NAME	RESULT	Q	RL	MDL
83-32-9	Acenaphthene	30	J H	96	7.9
208-96-8	Acenaphthylene	130	H	96	7.3
120-12-7	Anthracene	7.4	J H	96	5.4
56-55-3	Benzo[a]anthracene	ND	H	96	6.9
50-32-8	Benzo[a]pyrene	ND	H	96	9.0
205-99-2	Benzo[b]fluoranthene	ND	H	96	6.5
191-24-2	Benzo[g,h,i]perylene	ND	H	96	6.7
207-08-9	Benzo[k]fluoranthene	ND	H	96	14
218-01-9	Chrysene	ND	H	96	6.4
53-70-3	Dibenz(a,h)anthracene	ND	H	96	8.1
206-44-0	Fluoranthene	ND	H	96	7.7
86-73-7	Fluorene	26	J H	96	6.9
193-39-5	Indeno[1,2,3-cd]pyrene	ND	H	96	9.0
91-20-3	*Naphthalene*	*1500*	*E H*	*96*	*15*
85-01-8	Phenanthrene	24	J H	96	8.5
129-00-0	Pyrene	ND	H	96	6.5

CAS NO.	SURROGATE	%REC	Q	LIMITS
321-60-8	2-Fluorobiphenyl	106		48-120
4165-60-0	Nitrobenzene-d5 (Surr)	106		46-120
1718-51-0	p-Terphenyl-d14 (Surr)	85		67-150

FORM I
GC/MS SEMI VOA ORGANICS ANALYSIS DATA SHEET

Lab Name: TestAmerica Buffalo | Job No.: 480-89467-1
SDG No.:
Client Sample ID: WW-01-042815-1600 DL | Lab Sample ID: 480-89467-6 DL
Matrix: Water | Lab File ID: V60046.D
Analysis Method: 8270D | Date Collected: 04/28/2015 16:00
Extract. Method: 3510C | Date Extracted: 11/06/2015 12:33
Sample wt/vol: 259.7(mL) | Date Analyzed: 11/11/2015 13:47
Con. Extract Vol.: 1(mL) | Dilution Factor: 100
Injection Volume: 2(uL) | Level: (low/med) Low
% Moisture: | GPC Cleanup:(Y/N) N
Analysis Batch No.: 274392 | Units: ug/L

CAS NO.	COMPOUND NAME	RESULT	Q	RL	MDL
83-32-9	Acenaphthene	41	J H	480	39
208-96-8	Acenaphthylene	140	J H	480	37
120-12-7	Anthracene	ND	H	480	27
56-55-3	Benzo[a]anthracene	ND	H	480	35
50-32-8	Benzo[a]pyrene	ND	H	480	45
205-99-2	Benzo[b]fluoranthene	ND	H	480	33
191-24-2	Benzo[g,h,i]perylene	ND	H	480	34
207-08-9	Benzo[k]fluoranthene	ND	H	480	70
218-01-9	Chrysene	ND	H	480	32
53-70-3	Dibenz(a,h)anthracene	ND	H	480	40
206-44-0	Fluoranthene	ND	H	480	39
86-73-7	Fluorene	ND	H	480	35
193-39-5	Indeno[1,2,3-cd]pyrene	ND	H	480	45
91-20-3	Naphthalene	1700	H	480	73
85-01-8	Phenanthrene	ND	H	480	42
129-00-0	Pyrene	ND	H	480	33

CAS NO.	SURROGATE	%REC	Q	LIMITS
321-60-8	2-Fluorobiphenyl	99		48-120
4165-60-0	Nitrobenzene-d5 (Surr)	0	X	46-120
1718-51-0	p-Terphenyl-d14 (Surr)	104		67-150

FORM I
GC/MS SEMI VOA ORGANICS ANALYSIS DATA SHEET

Lab Name: TestAmerica Buffalo | Job No.: 480-89467-1
SDG No.:
Client Sample ID: WW-01-050715-1600 | Lab Sample ID: 480-89467-8
Matrix: Water | Lab File ID: V60018.D
Analysis Method: 8270D | Date Collected: 05/07/2015 16:00
Extract. Method: 3510C | Date Extracted: 11/06/2015 12:33
Sample wt/vol: 259.1(mL) | Date Analyzed: 11/10/2015 18:50
Con. Extract Vol.: 1(mL) | Dilution Factor: 20
Injection Volume: 2(uL) | Level: (low/med) Low
% Moisture: | GPC Cleanup:(Y/N) N
Analysis Batch No.: 273999 | Units: ug/L

CAS NO.	COMPOUND NAME	RESULT	Q	RL	MDL
83-32-9	Acenaphthene	64	J H	96	7.9
208-96-8	Acenaphthylene	210	H	96	7.3
120-12-7	Anthracene	15	J H	96	5.4
56-55-3	Benzo[a]anthracene	ND	H	96	6.9
50-32-8	Benzo[a]pyrene	ND	H	96	9.1
205-99-2	Benzo[b]fluoranthene	ND	H	96	6.6
191-24-2	Benzo[g,h,i]perylene	ND	H	96	6.8
207-08-9	Benzo[k]fluoranthene	ND	H	96	14
218-01-9	Chrysene	ND	H	96	6.4
53-70-3	Dibenz(a,h)anthracene	ND	H	96	8.1
206-44-0	Fluoranthene	ND	H	96	7.7
86-73-7	Fluorene	48	J H	96	6.9
193-39-5	Indeno[1,2,3-cd]pyrene	ND	H	96	9.1
91-20-3	*Naphthalene*	*1700*	*E H*	*96*	*15*
85-01-8	Phenanthrene	51	J H	96	8.5
129-00-0	Pyrene	ND	H	96	6.6

CAS NO.	SURROGATE	%REC	Q	LIMITS
321-60-8	2-Fluorobiphenyl	98		48-120
4165-60-0	Nitrobenzene-d5 (Surr)	0	X	46-120
1718-51-0	p-Terphenyl-d14 (Surr)	72		67-150

FORM I
GC/MS SEMI VOA ORGANICS ANALYSIS DATA SHEET

Lab Name: TestAmerica Buffalo | Job No.: 480-89467-1
SDG No.:
Client Sample ID: WW-01-050715-1600 DL | Lab Sample ID: 480-89467-8 DL
Matrix: Water | Lab File ID: V60047.D
Analysis Method: 8270D | Date Collected: 05/07/2015 16:00
Extract. Method: 3510C | Date Extracted: 11/06/2015 12:33
Sample wt/vol: 259.1(mL) | Date Analyzed: 11/11/2015 14:16
Con. Extract Vol.: 1(mL) | Dilution Factor: 100
Injection Volume: 2(uL) | Level: (low/med) Low
% Moisture: | GPC Cleanup:(Y/N) N
Analysis Batch No.: 274392 | Units: ug/L

CAS NO.	COMPOUND NAME	RESULT	Q	RL	MDL
83-32-9	Acenaphthene	52	J H	480	40
208-96-8	Acenaphthylene	210	J H	480	37
120-12-7	Anthracene	ND	H	480	27
56-55-3	Benzo[a]anthracene	ND	H	480	35
50-32-8	Benzo[a]pyrene	ND	H	480	45
205-99-2	Benzo[b]fluoranthene	ND	H	480	33
191-24-2	Benzo[g,h,i]perylene	ND	H	480	34
207-08-9	Benzo[k]fluoranthene	ND	H	480	70
218-01-9	Chrysene	ND	H	480	32
53-70-3	Dibenz(a,h)anthracene	ND	H	480	41
206-44-0	Fluoranthene	ND	H	480	39
86-73-7	Fluorene	47	J H	480	35
193-39-5	Indeno[1,2,3-cd]pyrene	ND	H	480	45
91-20-3	Naphthalene	1800	H	480	73
85-01-8	Phenanthrene	49	J H	480	42
129-00-0	Pyrene	ND	H	480	33

CAS NO.	SURROGATE	%REC	Q	LIMITS
321-60-8	2-Fluorobiphenyl	87		48-120
4165-60-0	Nitrobenzene-d5 (Surr)	0	X	46-120
1718-51-0	p-Terphenyl-d14 (Surr)	76		67-150

FORM I
GC/MS SEMI VOA ORGANICS ANALYSIS DATA SHEET

Lab Name: TestAmerica Buffalo
Job No.: 480-89467-1
SDG No.:
Client Sample ID: P-01-030515-1557
Lab Sample ID: 480-89467-10
Matrix: Water
Lab File ID: V60019.D
Analysis Method: 8270D
Date Collected: 03/05/2015 15:57
Extract. Method: 3510C
Date Extracted: 11/06/2015 12:33
Sample wt/vol: 257.5(mL)
Date Analyzed: 11/10/2015 19:19
Con. Extract Vol.: 1(mL)
Dilution Factor: 20
Injection Volume: 2(uL)
Level: (low/med) Low
% Moisture:
GPC Cleanup:(Y/N) N
Analysis Batch No.: 273999
Units: ug/L

CAS NO.	COMPOUND NAME	RESULT	Q	RL	MDL
83-32-9	Acenaphthene	ND	H	97	8.0
208-96-8	Acenaphthylene	ND	H	97	7.4
120-12-7	Anthracene	ND	H	97	5.4
56-55-3	Benzo[a]anthracene	ND	H	97	7.0
50-32-8	Benzo[a]pyrene	ND	H	97	9.1
205-99-2	Benzo[b]fluoranthene	ND	H	97	6.6
191-24-2	Benzo[g,h,i]perylene	ND	H	97	6.8
207-08-9	Benzo[k]fluoranthene	ND	H	97	14
218-01-9	Chrysene	ND	H	97	6.4
53-70-3	Dibenz(a,h)anthracene	ND	H	97	8.2
206-44-0	Fluoranthene	ND	H	97	7.8
86-73-7	Fluorene	ND	H	97	7.0
193-39-5	Indeno[1,2,3-cd]pyrene	ND	H	97	9.1
91-20-3	Naphthalene	160	H	97	15
85-01-8	Phenanthrene	ND	H	97	8.5
129-00-0	Pyrene	ND	H	97	6.6

CAS NO.	SURROGATE	%REC	Q	LIMITS
321-60-8	2-Fluorobiphenyl	81		48-120
4165-60-0	Nitrobenzene-d5 (Surr)	0	X	46-120
1718-51-0	p-Terphenyl-d14 (Surr)	67		67-150

FORM I
GC/MS SEMI VOA ORGANICS ANALYSIS DATA SHEET

Lab Name: TestAmerica Buffalo | Job No.: 480-89467-1
SDG No.:
Client Sample ID: P-01-051315-1530 | Lab Sample ID: 480-89467-13
Matrix: Water | Lab File ID: V60020.D
Analysis Method: 8270D | Date Collected: 05/13/2015 15:30
Extract. Method: 3510C | Date Extracted: 11/06/2015 12:33
Sample wt/vol: 242.4(mL) | Date Analyzed: 11/10/2015 19:48
Con. Extract Vol.: 1(mL) | Dilution Factor: 20
Injection Volume: 2(uL) | Level: (low/med) Low
% Moisture: | GPC Cleanup:(Y/N) N
Analysis Batch No.: 273999 | Units: ug/L

CAS NO.	COMPOUND NAME	RESULT	Q	RL	MDL
83-32-9	Acenaphthene	ND	H	100	8.5
208-96-8	Acenaphthylene	ND	H	100	7.8
120-12-7	Anthracene	ND	H	100	5.8
56-55-3	Benzo[a]anthracene	ND	H	100	7.4
50-32-8	Benzo[a]pyrene	ND	H	100	9.7
205-99-2	Benzo[b]fluoranthene	ND	H	100	7.0
191-24-2	Benzo[g,h,i]perylene	ND	H	100	7.2
207-08-9	Benzo[k]fluoranthene	ND	H	100	15
218-01-9	Chrysene	ND	H	100	6.8
53-70-3	Dibenz(a,h)anthracene	ND	H	100	8.7
206-44-0	Fluoranthene	ND	H	100	8.3
86-73-7	Fluorene	ND	H	100	7.4
193-39-5	Indeno[1,2,3-cd]pyrene	ND	H	100	9.7
91-20-3	Naphthalene	28	J H	100	16
85-01-8	Phenanthrene	ND	H	100	9.1
129-00-0	Pyrene	ND	H	100	7.0

CAS NO.	SURROGATE	%REC	Q	LIMITS
321-60-8	2-Fluorobiphenyl	95		48-120
4165-60-0	Nitrobenzene-d5 (Surr)	0	X	46-120
1718-51-0	p-Terphenyl-d14 (Surr)	83		67-150

FORM I
GC/MS SEMI VOA ORGANICS ANALYSIS DATA SHEET

Lab Name: TestAmerica Buffalo
Job No.: 480-89467-1
SDG No.:
Client Sample ID: OS-01-031815-1530
Lab Sample ID: 480-89467-14
Matrix: Waste
Lab File ID: X009014108.D
Analysis Method: 8270D
Date Collected: 03/18/2015 15:30
Extract. Method: 3580A
Date Extracted: 11/04/2015 13:45
Sample wt/vol: +0.13(g)
Date Analyzed: 11/05/2015 16:34
Con. Extract Vol.: 1(mL)
Dilution Factor: 100
Injection Volume: 1(uL)
Level: (low/med) Low
% Moisture:
GPC Cleanup:(Y/N) N
Analysis Batch No.: 273506
Units: ug/Kg

CAS NO.	COMPOUND NAME	RESULT	Q	RL	MDL
83-32-9	Acenaphthene	430000	H	260000	3100
208-96-8	Acenaphthylene	930000	H	260000	2200
120-12-7	Anthracene	ND	H	260000	6600
56-55-3	Benzo[a]anthracene	ND	H	260000	4500
50-32-8	Benzo[a]pyrene	ND	H	260000	6300
205-99-2	Benzo[b]fluoranthene	ND	H	260000	5100
191-24-2	Benzo[g,h,i]perylene	ND	H	260000	3100
207-08-9	Benzo[k]fluoranthene	ND	H	260000	2900
218-01-9	Chrysene	ND	H	260000	2600
53-70-3	Dibenz(a,h)anthracene	ND	H	260000	3100
206-44-0	Fluoranthene	400000	H	260000	3700
86-73-7	Fluorene	770000	H	260000	6000
193-39-5	Indeno[1,2,3-cd]pyrene	ND	H	260000	7200
91-20-3	Naphthalene	2300000	H	260000	4300
85-01-8	Phenanthrene	270000	H	260000	5400
129-00-0	Pyrene	560000	H	260000	1700

CAS NO.	SURROGATE	%REC	Q	LIMITS
321-60-8	2-Fluorobiphenyl	94		37-120
4165-60-0	Nitrobenzene-d5 (Surr)	65		34-132
1718-51-0	p-Terphenyl-d14 (Surr)	94		65-153

FORM I
GC/MS SEMI VOA ORGANICS ANALYSIS DATA SHEET

Lab Name: TestAmerica Buffalo
Job No.: 480-89467-1
SDG No.:
Client Sample ID: OS-01-042415-1600
Lab Sample ID: 480-89467-15
Matrix: Waste
Lab File ID: X009014109.D
Analysis Method: 8270D
Date Collected: 04/24/2015 16:00
Extract. Method: 3580A
Date Extracted: 11/04/2015 13:45
Sample wt/vol: +0.11(g)
Date Analyzed: 11/05/2015 17:01
Con. Extract Vol.: 1(mL)
Dilution Factor: 10
Injection Volume: 1(uL)
Level: (low/med) Low
% Moisture:
GPC Cleanup:(Y/N) N
Analysis Batch No.: 273506
Units: ug/Kg

CAS NO.	COMPOUND NAME	RESULT	Q	RL	MDL
83-32-9	Acenaphthene	390000	H	31000	360
208-96-8	Acenaphthylene	1400000	H	31000	250
120-12-7	Anthracene	230000	H	31000	780
56-55-3	Benzo[a]anthracene	150000	H	31000	530
50-32-8	Benzo[a]pyrene	96000	H	31000	750
205-99-2	Benzo[b]fluoranthene	34000	H	31000	600
191-24-2	Benzo[g,h,i]perylene	62000	H	31000	360
207-08-9	Benzo[k]fluoranthene	82000	H	31000	350
218-01-9	Chrysene	140000	H	31000	310
53-70-3	Dibenz(a,h)anthracene	ND	H	31000	360
206-44-0	Fluoranthene	410000	H	31000	440
86-73-7	Fluorene	590000	H	31000	710
193-39-5	Indeno[1,2,3-cd]pyrene	42000	H	31000	850
91-20-3	Naphthalene	3600000	H	31000	510
85-01-8	Phenanthrene	1200000	H	31000	640
129-00-0	Pyrene	580000	H	31000	200

CAS NO.	SURROGATE	%REC	Q	LIMITS
321-60-8	2-Fluorobiphenyl	102		37-120
4165-60-0	Nitrobenzene-d5 (Surr)	88		34-132
1718-51-0	p-Terphenyl-d14 (Surr)	101		65-153

FORM I
GC/MS SEMI VOA ORGANICS ANALYSIS DATA SHEET

Lab Name: TestAmerica Buffalo
Job No.: 480-89467-1
SDG No.:
Client Sample ID: OS-01-042815-1600
Lab Sample ID: 480-89467-16
Matrix: Waste
Lab File ID: X009014110.D
Analysis Method: 8270D
Date Collected: 04/28/2015 16:00
Extract. Method: 3580A
Date Extracted: 11/04/2015 13:45
Sample wt/vol: +0.12(g)
Date Analyzed: 11/05/2015 17:28
Con. Extract Vol.: 1(mL)
Dilution Factor: 200
Injection Volume: 1(uL)
Level: (low/med) Low
% Moisture:
GPC Cleanup:(Y/N) N
Analysis Batch No.: 273506
Units: ug/Kg

CAS NO.	COMPOUND NAME	RESULT	Q	RL	MDL
83-32-9	Acenaphthene	220000	J H	570000	6700
208-96-8	Acenaphthylene	610000	H	570000	4700
120-12-7	Anthracene	ND	H	570000	14000
56-55-3	Benzo[a]anthracene	ND	H	570000	9700
50-32-8	Benzo[a]pyrene	ND	H	570000	14000
205-99-2	Benzo[b]fluoranthene	ND	H	570000	11000
191-24-2	Benzo[g,h,i]perylene	ND	H	570000	6700
207-08-9	Benzo[k]fluoranthene	ND	H	570000	6300
218-01-9	Chrysene	ND	H	570000	5700
53-70-3	Dibenz(a,h)anthracene	ND	H	570000	6700
206-44-0	Fluoranthene	270000	J H	570000	8000
86-73-7	Fluorene	420000	J H	570000	13000
193-39-5	Indeno[1,2,3-cd]pyrene	ND	H	570000	16000
91-20-3	Naphthalene	1100000	H	570000	9300
85-01-8	Phenanthrene	ND	H	570000	12000
129-00-0	Pyrene	450000	J H	570000	3700

CAS NO.	SURROGATE	%REC	Q	LIMITS
321-60-8	2-Fluorobiphenyl	83		37-120
4165-60-0	Nitrobenzene-d5 (Surr)	0	X	34-132
1718-51-0	p-Terphenyl-d14 (Surr)	81		65-153

FORM I
GC/MS SEMI VOA ORGANICS ANALYSIS DATA SHEET

Lab Name: TestAmerica Buffalo
Job No.: 480-89467-1
SDG No.:
Client Sample ID: OS-01-050715-1630
Lab Sample ID: 480-89467-17
Matrix: Waste
Lab File ID: X009014111.D
Analysis Method: 8270D
Date Collected: 05/07/2015 16:30
Extract. Method: 3580A
Date Extracted: 11/04/2015 13:45
Sample wt/vol: +0.12(g)
Date Analyzed: 11/05/2015 17:55
Con. Extract Vol.: 1(mL)
Dilution Factor: 100
Injection Volume: 1(uL)
Level: (low/med) Low
% Moisture:
GPC Cleanup:(Y/N) N
Analysis Batch No.: 273506
Units: ug/Kg

CAS NO.	COMPOUND NAME	RESULT	Q	RL	MDL
83-32-9	Acenaphthene	ND	H	280000	3300
208-96-8	Acenaphthylene	980000	H	280000	2300
120-12-7	Anthracene	ND	H	280000	7200
56-55-3	Benzo[a]anthracene	ND	H	280000	4800
50-32-8	Benzo[a]pyrene	120000	J H	280000	6800
205-99-2	Benzo[b]fluoranthene	ND	H	280000	5500
191-24-2	Benzo[g,h,i]perylene	ND	H	280000	3300
207-08-9	Benzo[k]fluoranthene	ND	H	280000	3200
218-01-9	Chrysene	170000	J H	280000	2800
53-70-3	Dibenz(a,h)anthracene	ND	H	280000	3300
206-44-0	Fluoranthene	610000	H	280000	4000
86-73-7	Fluorene	590000	H	280000	6500
193-39-5	Indeno[1,2,3-cd]pyrene	ND	H	280000	7800
91-20-3	Naphthalene	1200000	H	280000	4700
85-01-8	Phenanthrene	410000	H	280000	5800
129-00-0	Pyrene	750000	H	280000	1800

CAS NO.	SURROGATE	%REC	Q	LIMITS
321-60-8	2-Fluorobiphenyl	97		37-120
4165-60-0	Nitrobenzene-d5 (Surr)	94		34-132
1718-51-0	p-Terphenyl-d14 (Surr)	103		65-153

FORM I
GC/MS SEMI VOA ORGANICS ANALYSIS DATA SHEET

Lab Name: TestAmerica Buffalo
Job No.: 480-89467-1
SDG No.:
Client Sample ID: P-01-101514-0910
Lab Sample ID: 480-89467-18
Matrix: Water
Lab File ID: V60021.D
Analysis Method: 8270D
Date Collected: 10/15/2014 09:10
Extract. Method: 3510C
Date Extracted: 11/06/2015 12:33
Sample wt/vol: 267(mL)
Date Analyzed: 11/10/2015 20:17
Con. Extract Vol.: 1(mL)
Dilution Factor: 20
Injection Volume: 2(uL)
Level: (low/med) Low
% Moisture:
GPC Cleanup:(Y/N) N
Analysis Batch No.: 273999
Units: ug/L

CAS NO.	COMPOUND NAME	RESULT	Q	RL	MDL
83-32-9	Acenaphthene	ND	H	94	7.7
208-96-8	Acenaphthylene	ND	H	94	7.1
120-12-7	Anthracene	ND	H	94	5.2
56-55-3	Benzo[a]anthracene	ND	H	94	6.7
50-32-8	Benzo[a]pyrene	ND	H	94	8.8
205-99-2	Benzo[b]fluoranthene	ND	H	94	6.4
191-24-2	Benzo[g,h,i]perylene	ND	H	94	6.6
207-08-9	Benzo[k]fluoranthene	ND	H	94	14
218-01-9	Chrysene	ND	H	94	6.2
53-70-3	Dibenz(a,h)anthracene	ND	H	94	7.9
206-44-0	Fluoranthene	ND	H	94	7.5
86-73-7	Fluorene	ND	H	94	6.7
193-39-5	Indeno[1,2,3-cd]pyrene	ND	H	94	8.8
91-20-3	Naphthalene	20	J H	94	14
85-01-8	Phenanthrene	ND	H	94	8.2
129-00-0	Pyrene	ND	H	94	6.4

CAS NO.	SURROGATE	%REC	Q	LIMITS
321-60-8	2-Fluorobiphenyl	93		48-120
4165-60-0	Nitrobenzene-d5 (Surr)	0	X	46-120
1718-51-0	p-Terphenyl-d14 (Surr)	74		67-150

FORM I
GC/MS SEMI VOA ORGANICS ANALYSIS DATA SHEET

Lab Name: TestAmerica Buffalo
Job No.: 480-89467-1
SDG No.:
Client Sample ID: P-01-100814-1120
Lab Sample ID: 480-89467-19
Matrix: Water
Lab File ID: V60022.D
Analysis Method: 8270D
Date Collected: 10/08/2014 11:20
Extract. Method: 3510C
Date Extracted: 11/06/2015 12:33
Sample wt/vol: 257.5(mL)
Date Analyzed: 11/10/2015 20:46
Con. Extract Vol.: 1(mL)
Dilution Factor: 20
Injection Volume: 2(uL)
Level: (low/med) Low
% Moisture:
GPC Cleanup:(Y/N) N
Analysis Batch No.: 273999
Units: ug/L

CAS NO.	COMPOUND NAME	RESULT	Q	RL	MDL
83-32-9	Acenaphthene	ND	H	97	8.0
208-96-8	Acenaphthylene	ND	H	97	7.4
120-12-7	Anthracene	ND	H	97	5.4
56-55-3	Benzo[a]anthracene	ND	H	97	7.0
50-32-8	Benzo[a]pyrene	ND	H	97	9.1
205-99-2	Benzo[b]fluoranthene	ND	H	97	6.6
191-24-2	Benzo[g,h,i]perylene	ND	H	97	6.8
207-08-9	Benzo[k]fluoranthene	ND	H	97	14
218-01-9	Chrysene	ND	H	97	6.4
53-70-3	Dibenz(a,h)anthracene	ND	H	97	8.2
206-44-0	Fluoranthene	ND	H	97	7.8
86-73-7	Fluorene	ND	H	97	7.0
193-39-5	Indeno[1,2,3-cd]pyrene	ND	H	97	9.1
91-20-3	Naphthalene	18	J H	97	15
85-01-8	Phenanthrene	ND	H	97	8.5
129-00-0	Pyrene	ND	H	97	6.6

CAS NO.	SURROGATE	%REC	Q	LIMITS
321-60-8	2-Fluorobiphenyl	94		48-120
4165-60-0	Nitrobenzene-d5 (Surr)	0	X	46-120
1718-51-0	p-Terphenyl-d14 (Surr)	98		67-150

FORM I
GC/MS SEMI VOA ORGANICS ANALYSIS DATA SHEET

Lab Name: TestAmerica Buffalo	Job No.: 480-89467-1
SDG No.:	
Client Sample ID: P-01-013015-0915	Lab Sample ID: 480-89467-20
Matrix: Water	Lab File ID: V60023.D
Analysis Method: 8270D	Date Collected: 01/30/2015 09:15
Extract. Method: 3510C	Date Extracted: 11/06/2015 12:33
Sample wt/vol: 255.5(mL)	Date Analyzed: 11/10/2015 21:15
Con. Extract Vol.: 1(mL)	Dilution Factor: 20
Injection Volume: 2(uL)	Level: (low/med) Low
% Moisture:	GPC Cleanup:(Y/N) N
Analysis Batch No.: 273999	Units: ug/L

CAS NO.	COMPOUND NAME	RESULT	Q	RL	MDL
83-32-9	Acenaphthene	17	J H	98	8.0
208-96-8	Acenaphthylene	140	H	98	7.4
120-12-7	Anthracene	11	J H	98	5.5
56-55-3	Benzo[a]anthracene	ND	H	98	7.0
50-32-8	Benzo[a]pyrene	ND	H	98	9.2
205-99-2	Benzo[b]fluoranthene	ND	H	98	6.7
191-24-2	Benzo[g,h,i]perylene	ND	H	98	6.8
207-08-9	Benzo[k]fluoranthene	ND	H	98	14
218-01-9	Chrysene	ND	H	98	6.5
53-70-3	Dibenz(a,h)anthracene	ND	H	98	8.2
206-44-0	Fluoranthene	9.7	J H	98	7.8
86-73-7	Fluorene	26	J H	98	7.0
193-39-5	Indeno[1,2,3-cd]pyrene	ND	H	98	9.2
91-20-3	*Naphthalene*	*1400*	*E H*	*98*	*15*
85-01-8	Phenanthrene	33	J H	98	8.6
129-00-0	Pyrene	ND	H	98	6.7

CAS NO.	SURROGATE	%REC	Q	LIMITS
321-60-8	2-Fluorobiphenyl	118		48-120
4165-60-0	Nitrobenzene-d5 (Surr)	0	X	46-120
1718-51-0	p-Terphenyl-d14 (Surr)	65	X	67-150

FORM I
GC/MS SEMI VOA ORGANICS ANALYSIS DATA SHEET

Lab Name: TestAmerica Buffalo
Job No.: 480-89467-1
SDG No.:
Client Sample ID: P-01-013015-0915 DL
Lab Sample ID: 480-89467-20 DL
Matrix: Water
Lab File ID: V60048.D
Analysis Method: 8270D
Date Collected: 01/30/2015 09:15
Extract. Method: 3510C
Date Extracted: 11/06/2015 12:33
Sample wt/vol: 255.5(mL)
Date Analyzed: 11/11/2015 14:45
Con. Extract Vol.: 1(mL)
Dilution Factor: 100
Injection Volume: 2(uL)
Level: (low/med) Low
% Moisture:
GPC Cleanup:(Y/N) N
Analysis Batch No.: 274392
Units: ug/L

CAS NO.	COMPOUND NAME	RESULT	Q	RL	MDL
83-32-9	Acenaphthene	ND	H	490	40
208-96-8	Acenaphthylene	140	J H	490	37
120-12-7	Anthracene	ND	H	490	27
56-55-3	Benzo[a]anthracene	ND	H	490	35
50-32-8	Benzo[a]pyrene	ND	H	490	46
205-99-2	Benzo[b]fluoranthene	ND	H	490	33
191-24-2	Benzo[g,h,i]perylene	ND	H	490	34
207-08-9	Benzo[k]fluoranthene	ND	H	490	71
218-01-9	Chrysene	ND	H	490	32
53-70-3	Dibenz(a,h)anthracene	ND	H	490	41
206-44-0	Fluoranthene	ND	H	490	39
86-73-7	Fluorene	ND	H	490	35
193-39-5	Indeno[1,2,3-cd]pyrene	ND	H	490	46
91-20-3	Naphthalene	1600	H	490	74
85-01-8	Phenanthrene	ND	H	490	43
129-00-0	Pyrene	ND	H	490	33

CAS NO.	SURROGATE	%REC	Q	LIMITS
321-60-8	2-Fluorobiphenyl	89		48-120
4165-60-0	Nitrobenzene-d5 (Surr)	0	X	46-120
1718-51-0	p-Terphenyl-d14 (Surr)	72		67-150

FORM I
GC/MS SEMI VOA ORGANICS ANALYSIS DATA SHEET

Lab Name: TestAmerica Buffalo
Job No.: 480-89467-1
SDG No.:
Client Sample ID: OS-01-101514-0910
Lab Sample ID: 480-89467-22
Matrix: Waste
Lab File ID: X009014112.D
Analysis Method: 8270D
Date Collected: 10/15/2014 09:10
Extract. Method: 3580A
Date Extracted: 11/04/2015 13:45
Sample wt/vol: +0.13(g)
Date Analyzed: 11/05/2015 18:21
Con. Extract Vol.: 1(mL)
Dilution Factor: 100
Injection Volume: 1(uL)
Level: (low/med) Low
% Moisture:
GPC Cleanup:(Y/N) N
Analysis Batch No.: 273506
Units: ug/Kg

CAS NO.	COMPOUND NAME	RESULT	Q	RL	MDL
83-32-9	Acenaphthene	ND	H	260000	3100
208-96-8	Acenaphthylene	470000	H	260000	2200
120-12-7	Anthracene	ND	H	260000	6600
56-55-3	Benzo[a]anthracene	ND	H	260000	4500
50-32-8	Benzo[a]pyrene	ND	H	260000	6300
205-99-2	Benzo[b]fluoranthene	ND	H	260000	5100
191-24-2	Benzo[g,h,i]perylene	ND	H	260000	3100
207-08-9	Benzo[k]fluoranthene	ND	H	260000	2900
218-01-9	Chrysene	ND	H	260000	2600
53-70-3	Dibenz(a,h)anthracene	ND	H	260000	3100
206-44-0	Fluoranthene	190000	J H	260000	3700
86-73-7	Fluorene	300000	H	260000	6000
193-39-5	Indeno[1,2,3-cd]pyrene	ND	H	260000	7200
91-20-3	Naphthalene	1200000	H	260000	4300
85-01-8	Phenanthrene	ND	H	260000	5400
129-00-0	Pyrene	200000	J H	260000	1700

CAS NO.	SURROGATE	%REC	Q	LIMITS
321-60-8	2-Fluorobiphenyl	73		37-120
4165-60-0	Nitrobenzene-d5 (Surr)	0	X	34-132
1718-51-0	p-Terphenyl-d14 (Surr)	78		65-153

FORM VI
GC/MS SEMI VOA BY INTERNAL STANDARD - INITIAL CALIBRATION DATA
CURVE EVALUATION

Lab Name: TestAmerica Buffalo Job No.: 480-89467-1 Analy Batch No.: 271208

SDG No.:

Instrument ID: HP5973V GC Column: RXI-5Sil MS ID: 0.25(mm) Heated Purge: (Y/N) N

Calibration Start Date: 10/26/2015 19:36 Calibration End Date: 10/26/2015 22:31 Calibration ID: 25393

Calibration Files:

LEVEL:	LAB SAMPLE ID:	LAB FILE ID:
Level 1	IC 480-271208/3	V53780.D
Level 2	IC 480-271208/4	V53781.D
Level 3	IC 480-271208/5	V53782.D
Level 4	ICIS 480-271208/6	V53783.D
Level 5	IC 480-271208/7	V53784.D
Level 6	IC 480-271208/8	V53785.D
Level 7	IC 480-271208/9	V53786.D

ANALYTE	RRF					CURVE TYPE	COEFFICIENT			#	MIN RRF	%RSD	#	MAX %RSD	R^2 OR COD	#	MIN R^2 OR COD
	LVL 1 LVL 6	LVL 2 LVL 7	LVL 3	LVL 4	LVL 5		B	M1	M2								
1,4-Dioxane	0.3775 0.4763	0.4213 0.4634	0.4886	0.4715	0.4825	Lin1	-0.025	0.4762							0.9990		0.9900
N-Nitrosodimethylamine	0.6628 0.7386	0.6936 0.7210	0.7798	0.7550	0.7559	Lin1	-0.014	0.7415							0.9990		0.9900
Pyridine	1.2747 1.4101	1.3568 1.3999	1.4288	1.3944	1.4241	Ave		1.3841				3.9		20.0			
Benzaldehyde	0.4532 0.7891	0.3607 0.7631	0.8670	0.3938	0.8068	Lin1	-0.146	0.7600			0.0100				0.9630	*	0.9900
Phenol	1.4516 1.4833	1.4021 1.4417	1.5874	1.4960	1.5124	Ave		1.4821			0.8000	4.0		20.0			
Aniline	1.8918 1.8954	1.8214 1.8415	1.9675	1.9788	1.9356	Ave		1.9046				3.1		20.0			
Bis(2-chloroethyl)ether	1.2152 1.2930	1.2554 1.3124	1.3652	1.2467	1.2937	Ave		1.2831			0.7000	3.8		20.0			
2-Chlorophenol	1.1934 1.3193	1.2780 1.2875	1.3535	1.3206	1.3298	Lin1	-0.020	1.3152			0.8000				1.0000		0.9900
n-Decane	2.1071 1.9085	1.9483 1.8376	2.1006	2.0259	1.9726	Ave		1.9858			0.0100	5.0		20.0			
1,3-Dichlorobenzene	1.4091 1.4477	1.4128 1.4500	1.5074	1.4749	1.4740	Ave		1.4537				2.4		20.0			
1,4-Dichlorobenzene	1.4798 1.5004	1.4688 1.4674	1.5513	1.5069	1.5195	Ave		1.4991				2.0		20.0			
Benzyl alcohol	0.7999 0.8411	0.8058 0.8244	0.8989	0.8583	0.8769	Ave		0.8436				4.4		20.0			
1,2-Dichlorobenzene	1.4478 1.4053	1.3348 1.3835	1.4546	1.4102	1.4132	Ave		1.4071				2.9		20.0			
2-Methylphenol	1.0946 1.1616	1.0774 1.1509	1.2065	1.1840	1.2053	Ave		1.1543			0.7000	4.4		20.0			

Note: The m1 coefficient is the same as Ave RRF for an Ave curve type.

FORM VI
GC/MS SEMI VOA BY INTERNAL STANDARD - INITIAL CALIBRATION DATA
CURVE EVALUATION

Lab Name: TestAmerica Buffalo Job No.: 480-89467-1 Analy Batch No.: 271208

SDG No.:

Instrument ID: HP5973V GC Column: RXI-5Sil MS ID: 0.25(mm) Heated Purge: (Y/N) N

Calibration Start Date: 10/26/2015 19:36 Calibration End Date: 10/26/2015 22:31 Calibration ID: 25393

ANALYTE	RRF					CURVE TYPE	COEFFICIENT			#	MIN RRF	%RSD	#	MAX %RSD	R^2 OR COD	#	MIN R^2 OR COD
	LVL 1 LVL 6	LVL 2 LVL 7	LVL 3	LVL 4	LVL 5		B	M1	M2								
bis (2-chloroisopropyl) ether	2.7527 2.4947	2.5470 2.4041	2.6990	2.6270	2.5671	Ave		2.5845			0.0100	4.6		20.0			
Indene	0.6186 0.6102	0.5902 0.6056	0.6272	0.6094	0.6159	Ave		0.6110				1.9		20.0			
4-Methylphenol	1.1285 1.1861	1.1487 1.1624	1.2658	1.2188	1.2325	Ave		1.1918			0.6000	4.1		20.0			
N-Nitrosodi-n-propylamine	0.7613 0.7851	0.8176 0.7913	0.8595	0.7998	0.7895	Ave		0.8006			0.5000	3.9		20.0			
Acetophenone	1.6644 1.6269	1.6427 1.5869	1.7893	1.7004	1.6851	Ave		1.6708			0.0100	3.9		20.0			
Hexachloroethane	0.5706 0.6062	0.5637 0.5926	0.6228	0.6072	0.6201	Ave		0.5976			0.3000	3.9		20.0			
Nitrobenzene	0.3310 0.3497	0.3125 0.3486	0.3484	0.3356	0.3493	Ave		0.3393			0.2000	4.1		20.0			
Isophorone	0.5929 0.6120	0.5302 0.6118	0.5603	0.5366	0.6011	Ave		0.5778			0.4000	6.1		20.0			
2,4-Dimethylphenol	0.3193 0.3287	0.3144 0.3333	0.3507	0.3259	0.3328	Ave		0.3293			0.2000	3.6		20.0			
2-Nitrophenol	0.1602 0.2035	0.1708 0.2008	0.2009	0.1948	0.2032	Lin1	-0.014	0.2030			0.1000				1.0000		0.9900
Benzoic acid	+++++ 0.2722	0.1617 0.2793	0.2117	0.2402	0.2655	Lin1	-0.138	0.2856							0.9990		0.9900
Bis(2-chloroethoxy)methane	0.4034 0.3659	0.3682 0.3620	0.4032	0.3636	0.3745	Ave		0.3772			0.3000	4.8		20.0			
2,4-Dichlorophenol	0.2717 0.2898	0.2693 0.2906	0.3030	0.2853	0.2901	Ave		0.2857			0.2000	4.1		20.0			
1,2,4-Trichlorobenzene	0.3319 0.3350	0.3211 0.3324	0.3365	0.3252	0.3380	Ave		0.3314				1.9		20.0			
Naphthalene	1.0739 0.9997	1.0099 0.9651	1.0661	1.0144	1.0173	Ave		1.0209			0.7000	3.7		20.0			
4-Chloroaniline	0.5391 0.5673	0.5112 0.5679	0.5546	0.5350	0.5690	Ave		0.5492			0.0100	4.0		20.0			
2,6-Dichlorophenol	0.2887 0.2860	0.2768 0.2898	0.2942	0.2864	0.2896	Ave		0.2874				1.9		20.0			
Hexachlorobutadiene	0.1934 0.2012	0.1841 0.2021	0.1990	0.1926	0.2008	Ave		0.1962			0.0100	3.3		20.0			
Caprolactam	0.0718 0.1227	0.0902 0.1226	0.1073	0.1059	0.1208	Lin1	-0.018	0.1219			0.0100				0.9980		0.9900
4-Chloro-3-methylphenol	0.2458 0.3012	0.2461 0.2987	0.2797	0.2823	0.2958	Ave		0.2785			0.2000	8.5		20.0			

Note: The m1 coefficient is the same as Ave RRF for an Ave curve type.

FORM VI
GC/MS SEMI VOA BY INTERNAL STANDARD - INITIAL CALIBRATION DATA
CURVE EVALUATION

Lab Name: TestAmerica Buffalo Job No.: 480-89467-1 Analy Batch No.: 271208

SDG No.:

Instrument ID: HP5973V GC Column: RXI-5Sil MS ID: 0.25(mm) Heated Purge: (Y/N) N

Calibration Start Date: 10/26/2015 19:36 Calibration End Date: 10/26/2015 22:31 Calibration ID: 25393

ANALYTE	RRF					CURVE TYPE	COEFFICIENT			#	MIN RRF	%RSD	#	MAX %RSD	R^2 OR COD	#	MIN R^2 OR COD
	LVL 1 LVL 6	LVL 2 LVL 7	LVL 3	LVL 4	LVL 5		B	M1	M2								
2-Methylnaphthalene	0.7080 0.6770	0.6594 0.6794	0.7230	0.6647	0.6908	Ave		0.6860			0.4000	3.3		20.0			
1-Methylnaphthalene	0.6591 0.6268	0.6142 0.6266	0.6639	0.6112	0.6388	Ave		0.6344			0.0100	3.3		20.0			
Hexachlorocyclopentadiene	0.3763 0.4523	0.4230 0.4486	0.4599	0.4370	0.4466	Lin1	-0.018	0.4508			0.0500				1.0000		0.9900
1,2,4,5-Tetrachlorobenzene	0.5750 0.5746	0.5591 0.5713	0.5804	0.5487	0.5547	Ave		0.5662			0.0100	2.1		20.0			
2,4,6-Trichlorophenol	0.3404 0.4107	0.3497 0.4055	0.3730	0.3929	0.3933	Ave		0.3808			0.2000	7.2		20.0			
2,4,5-Trichlorophenol	0.3778 0.4228	0.3521 0.4213	0.4163	0.4059	0.4135	Ave		0.4014			0.2000	6.6		20.0			
Biphenyl	1.5910 1.5121	1.5272 1.4596	1.5337	1.4864	1.4805	Ave		1.5129			0.0100	2.9		20.0			
2-Chloronaphthalene	1.2530 1.1661	1.1469 1.1344	1.1903	1.1238	1.1262	Ave		1.1630			0.8000	4.0		20.0			
2-Nitroaniline	0.2868 0.3853	0.3330 0.3807	0.3645	0.3591	0.3700	Lin1	-0.030	0.3802			0.0100				0.9990		0.9900
Dimethyl phthalate	1.2889 1.2964	1.3021 1.2763	1.3555	1.3127	1.2868	Ave		1.3027			0.0100	2.0		20.0			
1,3-Dinitrobenzene	0.0958 0.1434	0.1077 0.1435	0.1273	0.1303	0.1402	Lin1	-0.018	0.1426							0.9980		0.9900
2,6-Dinitrotoluene	0.2482 0.3292	0.3023 0.3262	0.3110	0.3147	0.3128	Lin1	-0.021	0.3249							1.0000		0.9900
Acenaphthylene	1.8555 1.8575	1.7911 1.7851	1.9428	1.9227	1.8372	Ave		1.8560			0.9000	3.2		20.0			
3-Nitroaniline	0.3114 0.3828	0.3223 0.3744	0.3777	0.3623	0.3696	Lin1	-0.023	0.3770			0.0100				0.9990		0.9900
2,4-Dinitrophenol	0.1173 0.2267	0.1520 0.2283	0.1837	0.1966	0.2115	Lin1	-0.082	0.2233			0.0100				0.9960		0.9900
4-Nitrophenol	0.1430 0.1785	0.1667 0.1797	0.1705	0.1699	0.1755	Lin1	-0.021	0.1783			0.0100				1.0000		0.9900
Acenaphthene	1.2310 1.1733	1.1569 1.1508	1.2377	1.2056	1.1684	Ave		1.1891			0.9000	3.0		20.0			
2,4-Dinitrotoluene	0.3165 0.4322	0.3763 0.4320	0.4204	0.4149	0.4179	Lin1	-0.034	0.4306			0.2000				1.0000		0.9900
Dibenzofuran	1.6437 1.6427	1.6900 1.5691	1.7801	1.6980	1.6229	Ave		1.6638			0.8000	4.0		20.0			
2,3,4,6-Tetrachlorophenol	0.2718 0.3612	0.3012 0.3529	0.3312	0.3408	0.3443	Lin1	-0.029	0.3544			0.0100				0.9990		0.9900

Note: The m1 coefficient is the same as Ave RRF for an Ave curve type.

FORM VI
GC/MS SEMI VOA BY INTERNAL STANDARD - INITIAL CALIBRATION DATA
CURVE EVALUATION

Lab Name: TestAmerica Buffalo Job No.: 480-89467-1 Analy Batch No.: 271208

SDG No.:

Instrument ID: HP5973V GC Column: RXI-5Sil MS ID: 0.25(mm) Heated Purge: (Y/N) N

Calibration Start Date: 10/26/2015 19:36 Calibration End Date: 10/26/2015 22:31 Calibration ID: 25393

ANALYTE	RRF					CURVE TYPE	COEFFICIENT			#	MIN RRF	%RSD	#	MAX %RSD	R^2 OR COD	#	MIN R^2 OR COD
	LVL 1 LVL 6	LVL 2 LVL 7	LVL 3	LVL 4	LVL 5		B	M1	M2								
Hexadecane	0.7009 0.6265	0.6560 0.6219	0.7002	0.6832	0.6552	Ave		0.6634			0.0100	4.9		20.0			
Diethyl phthalate	8.0204 1.5147	3.0531 1.4308	2.2545	1.7269	1.5136	Lin1	1.7014	1.3152			0.0100				0.9990		0.9900
4-Chlorophenyl phenyl ether	0.6548 0.6746	0.6608 0.6686	0.6971	0.6553	0.6608	Ave		0.6674			0.4000	2.2		20.0			
4-Nitroaniline	0.2584 0.3756	0.3103 0.3677	0.3481	0.3537	0.3603	Lin1	-0.036	0.3701			0.0100				0.9990		0.9900
Fluorene	1.3728 1.3781	1.3818 1.3346	1.4635	1.3955	1.3618	Ave		1.3840			0.9000	2.9		20.0			
4,6-Dinitro-2-methylphenol	0.0854 0.1543	0.1099 0.1604	0.1322	0.1413	0.1517	Lin1	-0.053	0.1565			0.0100				0.9980		0.9900
Diphenylamine	0.6598 0.6266	0.6540 0.6278	0.7036	0.6765	0.6502	Ave		0.6569				4.1		20.0			
N-Nitrosodiphenylamine	0.5642 0.5357	0.5592 0.5368	0.6016	0.5784	0.5559	Ave		0.5617			0.0100	4.1		20.0			
1,2-Diphenylhydrazine	0.6856 0.7027	0.6982 0.7060	0.7467	0.7108	0.7178	Ave		0.7097				2.7		20.0			
trans-Azobenzene	0.6856 0.7027	0.6982 0.7060	0.7467	0.7108	0.7178	Ave		0.7097				2.7		20.0			
4-Bromophenyl phenyl ether	0.2432 0.2499	0.2367 0.2527	0.2507	0.2492	0.2506	Ave		0.2476			0.1000	2.3		20.0			
Atrazine	0.3153 0.3705	0.3613 0.3692	0.3862	0.3655	0.3722	Lin1	-0.011	0.3721			0.0100				1.0000		0.9900
Hexachlorobenzene	0.2911 0.2922	0.2739 0.2961	0.2991	0.2881	0.2914	Ave		0.2903			0.1000	2.8		20.0			
n-Octadecane	0.6521 0.6386	0.6556 0.6409	0.6844	0.6694	0.6545	Ave		0.6565			0.0100	2.4		20.0			
Pentachlorophenol	0.1192 0.1868	0.1489 0.1912	0.1735	0.1781	0.1864	Lin1	-0.047	0.1894			0.0500				0.9990		0.9900
Phenanthrene	1.1237 1.0419	1.0779 1.0530	1.1492	1.1057	1.0790	Ave		1.0901			0.7000	3.5		20.0			
Anthracene	1.0820 1.0428	1.0650 1.0478	1.1356	1.1089	1.0798	Ave		1.0803			0.7000	3.1		20.0			
Carbazole	1.0205 0.9974	1.0300 1.0016	1.0826	1.0514	1.0178	Ave		1.0288			0.0100	2.9		20.0			
Di-n-butyl phthalate	1.7533 1.2692	1.4141 1.2454	1.4880	1.4164	1.3396	Lin1	0.1574	1.2818			0.0100				0.9970		0.9900
Fluoranthene	1.1776 1.1750	1.1727 1.1702	1.2620	1.2256	1.2134	Ave		1.1995			0.6000	2.9		20.0			

Note: The m1 coefficient is the same as Ave RRF for an Ave curve type.

FORM VI
GC/MS SEMI VOA BY INTERNAL STANDARD - INITIAL CALIBRATION DATA
CURVE EVALUATION

Lab Name: TestAmerica Buffalo Job No.: 480-89467-1 Analy Batch No.: 271208

SDG No.:

Instrument ID: HP5973V GC Column: RXI-5Sil MS ID: 0.25(mm) Heated Purge: (Y/N) N

Calibration Start Date: 10/26/2015 19:36 Calibration End Date: 10/26/2015 22:31 Calibration ID: 25393

ANALYTE	RRF					CURVE TYPE	COEFFICIENT			#	MIN RRF	%RSD	#	MAX %RSD	R^2 OR COD	#	MIN R^2 OR COD
	LVL 1 LVL 6	LVL 2 LVL 7	LVL 3	LVL 4	LVL 5		B	M1	M2								
Benzidine	0.2319 0.6612	0.2730 0.6581	0.5785	0.3668	0.6659	Lin1	-0.179	0.6454							0.9750	*	0.9900
Pyrene	1.1991 1.2248	1.1917 1.1873	1.2868	1.2645	1.2285	Ave		1.2261			0.6000	3.1		20.0			
Butyl benzyl phthalate	0.5153 0.6192	0.5359 0.6136	0.6066	0.6148	0.6228	Lin1	-0.036	0.6208			0.0100				1.0000		0.9900
Bis(2-ethylhexyl) phthalate	0.7695 0.8746	0.7782 0.8600	0.8699	0.8760	0.8817	Lin1	-0.035	0.8746			0.0100				1.0000		0.9900
3,3'-Dichlorobenzidine	0.3526 0.4643	0.3770 0.4638	0.4480	0.4110	0.4584	Lin1	-0.042	0.4610			0.0100				0.9980		0.9900
Benzo[a]anthracene	1.0802 1.1318	1.0831 1.1139	1.1611	1.1444	1.1442	Ave		1.1227			0.8000	2.8		20.0			
Chrysene	1.0492 1.0587	1.0277 1.0500	1.0946	1.0907	1.0697	Ave		1.0629			0.7000	2.3		20.0			
Di-n-octyl phthalate	1.1459 1.4826	1.2654 1.4382	1.4285	1.4829	1.4845	Lin1	-0.100	1.4766			0.0100				0.9990		0.9900
Benzo[b]fluoranthene	1.0161 1.1370	1.0528 1.1723	1.1270	1.1470	1.1369	Lin1	-0.049	1.1550			0.7000				1.0000		0.9900
Benzo[k]fluoranthene	1.0424 1.1629	1.0991 1.1240	1.1845	1.1570	1.1508	Lin1	-0.021	1.1497			0.7000				1.0000		0.9900
Benzo[a]pyrene	0.9285 1.0986	0.9895 1.1082	1.0841	1.0920	1.1019	Lin1	-0.058	1.1077			0.7000				1.0000		0.9900
Indeno[1,2,3-cd]pyrene	1.0883 1.2725	1.1741 1.2734	1.2423	1.2523	1.2688	Lin1	-0.059	1.2753			0.5000				1.0000		0.9900
Dibenz(a,h)anthracene	0.9076 1.0924	1.0050 1.0978	1.0746	1.0725	1.0861	Lin1	-0.056	1.0967							1.0000		0.9900
Benzo[g,h,i]perylene	0.9193 0.9881	0.9893 0.9862	1.0241	0.9983	0.9909	Ave		0.9852			0.5000	3.2		20.0			
2-Fluorophenol (Surr)	1.1461 1.1855	1.1065 1.1781	1.1727	1.1823	1.2020	Ave		1.1676				2.7		20.0			
Phenol-d5 (Surr)	1.3953 1.4619	1.3587 1.4147	1.4986	1.4547	1.4647	Ave		1.4355				3.3		20.0			
Nitrobenzene-d5 (Surr)	0.3386 0.3826	0.3418 0.3750	0.3791	0.3547	0.3827	Ave		0.3649				5.3		20.0			
2-Fluorobiphenyl	1.4555 1.3422	1.3643 1.3215	1.3923	1.3201	1.3188	Ave		1.3593				3.7		20.0			
2,4,6-Tribromophenol (Surr)	0.1377 0.1595	0.1382 0.1649	0.1565	0.1528	0.1578	Ave		0.1525				6.9		20.0			
p-Terphenyl-d14 (Surr)	0.8816 0.9005	0.8471 0.8817	0.9188	0.9086	0.9018	Ave		0.8914				2.7		20.0			

Note: The m1 coefficient is the same as Ave RRF for an Ave curve type.

FORM VI
GC/MS SEMI VOA BY INTERNAL STANDARD - INITIAL CALIBRATION DATA
RESPONSE AND CONCENTRATION

Lab Name: TestAmerica Buffalo Job No.: 480-89467-1 Analy Batch No.: 271208

SDG No.:

Instrument ID: HP5973V GC Column: RXI-5Sil MS ID: 0.25(mm) Heated Purge: (Y/N) N

Calibration Start Date: 10/26/2015 19:36 Calibration End Date: 10/26/2015 22:31 Calibration ID: 25393

Calibration Files:

LEVEL:	LAB SAMPLE ID:	LAB FILE ID:
Level 1	IC 480-271208/3	V53780.D
Level 2	IC 480-271208/4	V53781.D
Level 3	IC 480-271208/5	V53782.D
Level 4	ICIS 480-271208/6	V53783.D
Level 5	IC 480-271208/7	V53784.D
Level 6	IC 480-271208/8	V53785.D
Level 7	IC 480-271208/9	V53786.D

ANALYTE	IS REF	CURVE TYPE	RESPONSE					CONCENTRATION (NG/UL)				
			LVL 1 LVL 6	LVL 2 LVL 7	LVL 3	LVL 4	LVL 5	LVL 1 LVL 6	LVL 2 LVL 7	LVL 3	LVL 4	LVL 5
1,4-Dioxane	DCB	Lin1	3519 175039	16210 209008	36382	70463	142723	0.250 10.0	1.00 12.0	2.00	4.00	8.00
N-Nitrosodimethylamine	DCB	Lin1	6179 271405	26688 325230	58061	112822	223606	0.250 10.0	1.00 12.0	2.00	4.00	8.00
Pyridine	DCB	Ave	11883 518168	52209 631452	106382	208389	421273	0.250 10.0	1.00 12.0	2.00	4.00	8.00
Benzaldehyde	DCB	Lin1	4225 289946	13878 344208	64556	58848	238662	0.250 10.0	1.00 12.0	2.00	4.00	8.00
Phenol	DCB	Ave	13532 545063	53951 650333	118195	223571	447393	0.250 10.0	1.00 12.0	2.00	4.00	8.00
Aniline	DCB	Ave	17636 696487	70088 830685	146496	295717	572570	0.250 10.0	1.00 12.0	2.00	4.00	8.00
Bis(2-chloroethyl)ether	DCB	Ave	11328 475127	48308 592012	101652	186303	382675	0.250 10.0	1.00 12.0	2.00	4.00	8.00
2-Chlorophenol	DCB	Lin1	11125 484784	49179 580764	100778	197350	393372	0.250 10.0	1.00 12.0	2.00	4.00	8.00
n-Decane	DCB	Ave	19643 701283	74971 828912	156408	302753	583523	0.250 10.0	1.00 12.0	2.00	4.00	8.00
1,3-Dichlorobenzene	DCB	Ave	13136 531974	54366 654062	112239	220411	436015	0.250 10.0	1.00 12.0	2.00	4.00	8.00
1,4-Dichlorobenzene	DCB	Ave	13795 551321	56518 661916	115507	225194	449478	0.250 10.0	1.00 12.0	2.00	4.00	8.00
Benzyl alcohol	DCB	Ave	7457 309066	31006 371866	66928	128262	259388	0.250 10.0	1.00 12.0	2.00	4.00	8.00
1,2-Dichlorobenzene	DCB	Ave	13497 516375	51365 624082	108306	210748	418039	0.250 10.0	1.00 12.0	2.00	4.00	8.00
2-Methylphenol	DCB	Ave	10204 426831	41458 519138	89837	176936	356526	0.250 10.0	1.00 12.0	2.00	4.00	8.00
bis (2-chloroisopropyl) ether	DCB	Ave	25661 916708	98010 1084446	200965	392586	759378	0.250 10.0	1.00 12.0	2.00	4.00	8.00

FORM VI
GC/MS SEMI VOA BY INTERNAL STANDARD - INITIAL CALIBRATION DATA
RESPONSE AND CONCENTRATION

Lab Name: TestAmerica Buffalo Job No.: 480-89467-1 Analy Batch No.: 271208

SDG No.:

Instrument ID: HP5973V GC Column: RXI-5Sil MS ID: 0.25(mm) Heated Purge: (Y/N) N

Calibration Start Date: 10/26/2015 19:36 Calibration End Date: 10/26/2015 22:31 Calibration ID: 25393

ANALYTE	IS REF	CURVE TYPE	RESPONSE					CONCENTRATION (NG/UL)				
			LVL 1 LVL 6	LVL 2 LVL 7	LVL 3	LVL 4	LVL 5	LVL 1 LVL 6	LVL 2 LVL 7	LVL 3	LVL 4	LVL 5
Indene	NPT	Ave	21652 817979	85672 984151	174763	347395	674228	0.250 10.0	1.00 12.0	2.00	4.00	8.00
4-Methylphenol	DCB	Ave	10520 435835	44201 524346	94247	182133	364579	0.250 10.0	1.00 12.0	2.00	4.00	8.00
N-Nitrosodi-n-propylamine	DCB	Ave	7097 288480	31463 356933	63994	119530	233533	0.250 10.0	1.00 12.0	2.00	4.00	8.00
Acetophenone	DCB	Ave	15516 597821	63212 715809	133228	254117	498470	0.250 10.0	1.00 12.0	2.00	4.00	8.00
Hexachloroethane	DCB	Ave	5319 222760	21693 267290	46371	90745	183426	0.250 10.0	1.00 12.0	2.00	4.00	8.00
Nitrobenzene	NPT	Ave	11587 468737	45370 566501	97077	191304	382433	0.250 10.0	1.00 12.0	2.00	4.00	8.00
Isophorone	NPT	Ave	20754 820359	76966 994192	156114	305899	658113	0.250 10.0	1.00 12.0	2.00	4.00	8.00
2,4-Dimethylphenol	NPT	Ave	11178 440578	45646 541566	97727	185776	364377	0.250 10.0	1.00 12.0	2.00	4.00	8.00
2-Nitrophenol	NPT	Lin1	5607 272753	24793 326378	55982	111071	222452	0.250 10.0	1.00 12.0	2.00	4.00	8.00
Benzoic acid	NPT	Lin1	+++++ 364849	23477 453812	58995	136945	290622	+++++ 10.0	1.00 12.0	2.00	4.00	8.00
Bis(2-chloroethoxy)methane	NPT	Ave	14119 490442	53445 588297	112355	207286	409991	0.250 10.0	1.00 12.0	2.00	4.00	8.00
2,4-Dichlorophenol	NPT	Ave	9511 388481	39093 472308	84430	162670	317621	0.250 10.0	1.00 12.0	2.00	4.00	8.00
1,2,4-Trichlorobenzene	NPT	Ave	11619 449119	46606 540148	93755	185385	369989	0.250 10.0	1.00 12.0	2.00	4.00	8.00
Naphthalene	NPT	Ave	37590 1340025	146597 1568285	297039	578289	1113754	0.250 10.0	1.00 12.0	2.00	4.00	8.00
4-Chloroaniline	NPT	Ave	18872 760412	74214 922956	154520	305002	622899	0.250 10.0	1.00 12.0	2.00	4.00	8.00
2,6-Dichlorophenol	NPT	Ave	10107 383331	40187 470975	81972	163276	317064	0.250 10.0	1.00 12.0	2.00	4.00	8.00
Hexachlorobutadiene	NPT	Ave	6769 269648	26724 328484	55435	109813	219810	0.250 10.0	1.00 12.0	2.00	4.00	8.00
Caprolactam	NPT	Lin1	2514 164462	13089 199188	29892	60365	132195	0.250 10.0	1.00 12.0	2.00	4.00	8.00
4-Chloro-3-methylphenol	NPT	Ave	8604 403741	35727 485441	77919	160915	323820	0.250 10.0	1.00 12.0	2.00	4.00	8.00
2-Methylnaphthalene	NPT	Ave	24784 907449	95718 1104067	201453	378930	756269	0.250 10.0	1.00 12.0	2.00	4.00	8.00
1-Methylnaphthalene	NPT	Ave	23070 840236	89167 1018241	184967	348435	699340	0.250 10.0	1.00 12.0	2.00	4.00	8.00

FORM VI
GC/MS SEMI VOA BY INTERNAL STANDARD - INITIAL CALIBRATION DATA
RESPONSE AND CONCENTRATION

Lab Name: TestAmerica Buffalo Job No.: 480-89467-1 Analy Batch No.: 271208

SDG No.:

Instrument ID: HP5973V GC Column: RXI-5Sil MS ID: 0.25(mm) Heated Purge: (Y/N) N

Calibration Start Date: 10/26/2015 19:36 Calibration End Date: 10/26/2015 22:31 Calibration ID: 25393

ANALYTE	IS REF	CURVE TYPE	RESPONSE					CONCENTRATION (NG/UL)				
			LVL 1 LVL 6	LVL 2 LVL 7	LVL 3	LVL 4	LVL 5	LVL 1 LVL 6	LVL 2 LVL 7	LVL 3	LVL 4	LVL 5
Hexachlorocyclopentadiene	ANT	Lin1	7029 335313	31985 407393	69581	135314	276421	0.250 10.0	1.00 12.0	2.00	4.00	8.00
1,2,4,5-Tetrachlorobenzene	ANT	Ave	10741 426038	42272 518793	87802	169899	343345	0.250 10.0	1.00 12.0	2.00	4.00	8.00
2,4,6-Trichlorophenol	ANT	Ave	6359 304462	26445 368225	56430	121673	243474	0.250 10.0	1.00 12.0	2.00	4.00	8.00
2,4,5-Trichlorophenol	ANT	Ave	7057 313483	26627 382596	62975	125691	255986	0.250 10.0	1.00 12.0	2.00	4.00	8.00
Biphenyl	ANT	Ave	29720 1121102	115479 1325486	232029	460268	916430	0.250 10.0	1.00 12.0	2.00	4.00	8.00
2-Chloronaphthalene	ANT	Ave	23406 864545	86724 1030123	180087	347985	697141	0.250 10.0	1.00 12.0	2.00	4.00	8.00
2-Nitroaniline	ANT	Lin1	5357 285666	25176 345725	55152	111185	229034	0.250 10.0	1.00 12.0	2.00	4.00	8.00
Dimethyl phthalate	ANT	Ave	24077 961139	98456 1159026	205069	406468	796546	0.250 10.0	1.00 12.0	2.00	4.00	8.00
1,3-Dinitrobenzene	NPT	Lin1	3352 192180	15631 233127	35456	74289	153529	0.250 10.0	1.00 12.0	2.00	4.00	8.00
2,6-Dinitrotoluene	ANT	Lin1	4637 244074	22859 296209	47053	97445	193606	0.250 10.0	1.00 12.0	2.00	4.00	8.00
Acenaphthylene	ANT	Ave	34661 1377176	135435 1621020	293922	595362	1137227	0.250 10.0	1.00 12.0	2.00	4.00	8.00
3-Nitroaniline	ANT	Lin1	5817 283827	24369 340018	57145	112192	228803	0.250 10.0	1.00 12.0	2.00	4.00	8.00
2,4-Dinitrophenol	ANT	Lin1	4381 336118	22986 414637	55593	121784	261871	0.500 20.0	2.00 24.0	4.00	8.00	16.0
4-Nitrophenol	ANT	Lin1	5342 264676	25205 326290	51602	105234	217266	0.500 20.0	2.00 24.0	4.00	8.00	16.0
Acenaphthene	ANT	Ave	22994 869877	87481 1045030	187251	373324	723219	0.250 10.0	1.00 12.0	2.00	4.00	8.00
2,4-Dinitrotoluene	ANT	Lin1	5912 320440	28457 392263	63598	128470	258677	0.250 10.0	1.00 12.0	2.00	4.00	8.00
Dibenzofuran	ANT	Ave	30704 1217943	127787 1424883	269310	525786	1004593	0.250 10.0	1.00 12.0	2.00	4.00	8.00
2,3,4,6-Tetrachlorophenol	ANT	Lin1	5078 267767	22773 320430	50112	105522	213136	0.250 10.0	1.00 12.0	2.00	4.00	8.00
Hexadecane	PHN	Ave	22102 819260	87235 964081	181848	361725	687547	0.250 10.0	1.00 12.0	2.00	4.00	8.00
Diethyl phthalate	ANT	Lin1	149818 1123005	230856 1299342	341075	534743	936957	0.250 10.0	1.00 12.0	2.00	4.00	8.00
4-Chlorophenyl phenyl ether	ANT	Ave	12231 500175	49964 607118	105468	202904	409050	0.250 10.0	1.00 12.0	2.00	4.00	8.00

FORM VI
GC/MS SEMI VOA BY INTERNAL STANDARD - INITIAL CALIBRATION DATA
RESPONSE AND CONCENTRATION

Lab Name: TestAmerica Buffalo Job No.: 480-89467-1 Analy Batch No.: 271208

SDG No.:

Instrument ID: HP5973V GC Column: RXI-5Sil MS ID: 0.25(mm) Heated Purge: (Y/N) N

Calibration Start Date: 10/26/2015 19:36 Calibration End Date: 10/26/2015 22:31 Calibration ID: 25393

ANALYTE	IS REF	CURVE TYPE	RESPONSE					CONCENTRATION (NG/UL)				
			LVL 1 LVL 6	LVL 2 LVL 7	LVL 3	LVL 4	LVL 5	LVL 1 LVL 6	LVL 2 LVL 7	LVL 3	LVL 4	LVL 5
4-Nitroaniline	ANT	Lin1	4827 278499	23461 333944	52660	109514	223001	0.250 10.0	1.00 12.0	2.00	4.00	8.00
Fluorene	ANT	Ave	25643 1021754	104481 1211948	221406	432116	842950	0.250 10.0	1.00 12.0	2.00	4.00	8.00
4,6-Dinitro-2-methylphenol	PHN	Lin1	5387 403631	29226 497360	68656	149592	318454	0.500 20.0	2.00 24.0	4.00	8.00	16.0
Diphenylamine	PHN	Ave	35583 1401028	148726 1664133	312474	612522	1166646	0.428 17.1	1.71 20.5	3.42	6.84	13.7
N-Nitrosodiphenylamine	PHN	Ave	35583 1401028	148726 1664133	312474	612522	1166646	0.500 20.0	2.00 24.0	4.00	8.00	16.0
1,2-Diphenylhydrazine	PHN	Ave	21620 918846	92851 1094329	193937	376338	753229	0.250 10.0	1.00 12.0	2.00	4.00	8.00
trans-Azobenzene	PHN	Ave	21620 918846	92851 1094329	193937	376338	753229	0.250 10.0	1.00 12.0	2.00	4.00	8.00
4-Bromophenyl phenyl ether	PHN	Ave	7669 326758	31477 391736	65103	131924	262929	0.250 10.0	1.00 12.0	2.00	4.00	8.00
Atrazine	ANT	Lin1	5890 274700	27317 335260	58430	113184	230396	0.250 10.0	1.00 12.0	2.00	4.00	8.00
Hexachlorobenzene	PHN	Ave	9179 382099	36428 458944	77671	152553	305771	0.250 10.0	1.00 12.0	2.00	4.00	8.00
n-Octadecane	PHN	Ave	20565 835073	87187 993523	177759	354428	686780	0.250 10.0	1.00 12.0	2.00	4.00	8.00
Pentachlorophenol	PHN	Lin1	7516 488521	39599 592861	90106	188588	391102	0.500 20.0	2.00 24.0	4.00	8.00	16.0
Phenanthrene	PHN	Ave	35436 1362452	143353 1632234	298464	585461	1132201	0.250 10.0	1.00 12.0	2.00	4.00	8.00
Anthracene	PHN	Ave	34122 1363636	141631 1624161	294928	587143	1133097	0.250 10.0	1.00 12.0	2.00	4.00	8.00
Carbazole	PHN	Ave	32183 1304211	136982 1552568	281163	556699	1068002	0.250 10.0	1.00 12.0	2.00	4.00	8.00
Di-n-butyl phthalate	PHN	Lin1	55292 1659599	188064 1930561	386463	749932	1405764	0.250 10.0	1.00 12.0	2.00	4.00	8.00
Fluoranthene	PHN	Ave	37138 1536438	155951 1813892	327769	648909	1273327	0.250 10.0	1.00 12.0	2.00	4.00	8.00
Benzidine	CRY	Lin1	7678 854280	37751 1034112	153353	194315	699403	0.250 10.0	1.00 12.0	2.00	4.00	8.00
Pyrene	CRY	Ave	39694 1582446	164768 1865674	341116	669809	1290343	0.250 10.0	1.00 12.0	2.00	4.00	8.00
Butyl benzyl phthalate	CRY	Lin1	17059 799999	74093 964146	160802	325665	654124	0.250 10.0	1.00 12.0	2.00	4.00	8.00
Bis(2-ethylhexyl) phthalate	CRY	Lin1	25473 1130009	107592 1351470	230617	463989	926049	0.250 10.0	1.00 12.0	2.00	4.00	8.00

FORM VI
GC/MS SEMI VOA BY INTERNAL STANDARD - INITIAL CALIBRATION DATA
RESPONSE AND CONCENTRATION

Lab Name: TestAmerica Buffalo Job No.: 480-89467-1 Analy Batch No.: 271208

SDG No.:

Instrument ID: HP5973V GC Column: RXI-5Sil MS ID: 0.25(mm) Heated Purge: (Y/N) N

Calibration Start Date: 10/26/2015 19:36 Calibration End Date: 10/26/2015 22:31 Calibration ID: 25393

ANALYTE	IS REF	CURVE TYPE	RESPONSE					CONCENTRATION (NG/UL)				
			LVL 1 LVL 6	LVL 2 LVL 7	LVL 3	LVL 4	LVL 5	LVL 1 LVL 6	LVL 2 LVL 7	LVL 3	LVL 4	LVL 5
3,3'-Dichlorobenzidine	CRY	Lin1	11672 599929	52126 728767	118765	217694	481463	0.250 10.0	1.00 12.0	2.00	4.00	8.00
Benzo[a]anthracene	CRY	Ave	35757 1462365	149745 1750430	307795	606175	1201812	0.250 10.0	1.00 12.0	2.00	4.00	8.00
Chrysene	CRY	Ave	34732 1367840	142085 1650023	290181	577733	1123552	0.250 10.0	1.00 12.0	2.00	4.00	8.00
Di-n-octyl phthalate	CRY	Lin1	37932 1915576	174952 2259968	378695	785504	1559275	0.250 10.0	1.00 12.0	2.00	4.00	8.00
Benzo[b]fluoranthene	PRY	Lin1	35589 1565499	151754 1934133	317985	651856	1277411	0.250 10.0	1.00 12.0	2.00	4.00	8.00
Benzo[k]fluoranthene	PRY	Lin1	36510 1601285	158427 1854508	334206	657532	1292985	0.250 10.0	1.00 12.0	2.00	4.00	8.00
Benzo[a]pyrene	PRY	Lin1	32523 1512662	142626 1828411	305871	620563	1238011	0.250 10.0	1.00 12.0	2.00	4.00	8.00
Indeno[1,2,3-cd]pyrene	PRY	Lin1	38119 1752128	169234 2100941	350520	711678	1425535	0.250 10.0	1.00 12.0	2.00	4.00	8.00
Dibenz(a,h)anthracene	PRY	Lin1	31788 1504216	144859 1811235	303198	609524	1220253	0.250 10.0	1.00 12.0	2.00	4.00	8.00
Benzo[g,h,i]perylene	PRY	Ave	32199 1360511	142605 1627168	288960	567309	1113320	0.250 10.0	1.00 12.0	2.00	4.00	8.00
2-Fluorophenol (Surr)	DCB	Ave	10684 435630	42580 531437	87315	176681	355551	0.250 10.0	1.00 12.0	2.00	4.00	8.00
Phenol-d5 (Surr)	DCB	Ave	13007 537193	52283 638138	111583	217393	433281	0.250 10.0	1.00 12.0	2.00	4.00	8.00
Nitrobenzene-d5 (Surr)	NPT	Ave	11851 512925	49618 609429	105631	202200	418958	0.250 10.0	1.00 12.0	2.00	4.00	8.00
2-Fluorobiphenyl	ANT	Ave	27189 995084	103160 1200096	210643	408771	816345	0.250 10.0	1.00 12.0	2.00	4.00	8.00
2,4,6-Tribromophenol (Surr)	PHN	Ave	4341 208616	18381 255605	40641	80918	165543	0.250 10.0	1.00 12.0	2.00	4.00	8.00
p-Terphenyl-d14 (Surr)	CRY	Ave	29185 1163423	117120 1385466	243582	481262	947175	0.250 10.0	1.00 12.0	2.00	4.00	8.00

Curve Type Legend:
Ave = Average ISTD
Lin1 = Linear 1/conc ISTD

FORM VI
GC/MS SEMI VOA BY INTERNAL STANDARD - INITIAL CALIBRATION DATA
CURVE EVALUATION

Lab Name: TestAmerica Buffalo Job No.: 480-89467-1 Analy Batch No.: 270613

SDG No.:

Instrument ID: HP5973X GC Column: RXI-5Sil MS ID: 0.25(mm) Heated Purge: (Y/N) N

Calibration Start Date: 10/23/2015 08:33 Calibration End Date: 10/23/2015 10:48 Calibration ID: 25373

Calibration Files:

LEVEL:	LAB SAMPLE ID:	LAB FILE ID:
Level 1	IC 480-270613/3	X009013899.D
Level 2	IC 480-270613/4	X009013900.D
Level 3	ICIS 480-270613/5	X009013901.D
Level 4	IC 480-270613/6	X009013902.D
Level 5	IC 480-270613/7	X009013903.D
Level 6	IC 480-270613/8	X009013904.D

ANALYTE	RRF					CURVE TYPE	COEFFICIENT			#	MIN RRF	%RSD	#	MAX %RSD	R^2 OR COD	#	MIN R^2 OR COD
	LVL 1 LVL 6	LVL 2	LVL 3	LVL 4	LVL 5		B	M1	M2								
1,4-Dioxane	0.5841 0.6290	0.6231	0.6087	0.6493	0.6230	Ave		0.6195				3.5		20.0			
N-Nitrosodimethylamine	0.7520 0.7140	0.7196	0.6976	0.7361	0.7109	Ave		0.7217				2.7		20.0			
Pyridine	1.3173 1.2940	1.3014	1.2673	1.3189	1.2916	Ave		1.2984				1.5		20.0			
Benzaldehyde	0.4617 0.5332	0.4880	0.4957	0.5555	0.5413	Lin1	-0.562	0.5408			0.0100				0.9980		0.9900
Phenol	1.8269 1.7330	1.8130	1.7280	1.7532	1.7507	Ave		1.7674			0.8000	2.4		20.0			
Aniline	1.9708 2.1279	2.1887	2.1146	2.1835	2.1554	Ave		2.1235				3.8		20.0			
Bis(2-chloroethyl)ether	1.4336 1.4114	1.4621	1.3823	1.4320	1.4146	Ave		1.4227			0.7000	1.9		20.0			
2-Chlorophenol	1.4881 1.4320	1.4549	1.4329	1.4613	1.4446	Ave		1.4523			0.8000	1.5		20.0			
n-Decane	1.9241 1.7105	1.8465	1.7319	1.7547	1.7540	Ave		1.7869			0.0100	4.6		20.0			
1,3-Dichlorobenzene	1.5989 1.5358	1.5555	1.5424	1.5670	1.5475	Ave		1.5578				1.5		20.0			
1,4-Dichlorobenzene	1.6305 1.5639	1.6180	1.5688	1.6027	1.5756	Ave		1.5933				1.7		20.0			
Benzyl alcohol	0.8791 0.9268	0.9363	0.9156	0.9468	0.9287	Ave		0.9222				2.6		20.0			
1,2-Dichlorobenzene	1.5771 1.4553	1.4873	1.4590	1.4869	1.4680	Ave		1.4889				3.0		20.0			
2-Methylphenol	1.2847 1.2658	1.2777	1.2392	1.2791	1.2812	Ave		1.2713			0.7000	1.3		20.0			
bis (2-chloroisopropyl) ether	2.0381 1.7580	1.9551	1.7997	1.8252	1.8204	Ave		1.8661			0.0100	5.7		20.0			

Note: The m1 coefficient is the same as Ave RRF for an Ave curve type.

FORM VI
GC/MS SEMI VOA BY INTERNAL STANDARD - INITIAL CALIBRATION DATA
CURVE EVALUATION

Lab Name: TestAmerica Buffalo Job No.: 480-89467-1 Analy Batch No.: 270613

SDG No.:

Instrument ID: HP5973X GC Column: RXI-5Sil MS ID: 0.25(mm) Heated Purge: (Y/N) N

Calibration Start Date: 10/23/2015 08:33 Calibration End Date: 10/23/2015 10:48 Calibration ID: 25373

ANALYTE	RRF					CURVE TYPE	COEFFICIENT			#	MIN RRF	%RSD	#	MAX %RSD	R^2 OR COD	#	MIN R^2 OR COD
	LVL 1 LVL 6	LVL 2	LVL 3	LVL 4	LVL 5		B	M1	M2								
Indene	0.8133 0.7333	0.7833	0.7876	0.7706	0.7560	Ave		0.7740				3.6		20.0			
4-Methylphenol	1.3361 1.2949	1.3397	1.2851	1.3195	1.3137	Ave		1.3148			0.6000	1.7		20.0			
N-Nitrosodi-n-propylamine	0.9750 0.9767	0.9909	0.9376	0.9840	0.9713	Ave		0.9726			0.5000	1.9		20.0			
Acetophenone	1.9756 1.8049	1.9208	1.7901	1.8262	1.8287	Ave		1.8577			0.0100	4.0		20.0			
Hexachloroethane	0.6213 0.6148	0.6019	0.6025	0.6185	0.6118	Ave		0.6118			0.3000	1.3		20.0			
Nitrobenzene	0.3851 0.3724	0.3770	0.3741	0.3838	0.3710	Ave		0.3772			0.2000	1.6		20.0			
Isophorone	0.6826 0.6540	0.6762	0.6698	0.6766	0.6592	Ave		0.6697			0.4000	1.7		20.0			
2-Nitrophenol	0.1800 0.2033	0.1863	0.2013	0.2077	0.1994	Lin1	-0.158	0.2042			0.1000				0.9990		0.9900
2,4-Dimethylphenol	0.3599 0.3598	0.3677	0.3637	0.3723	0.3590	Ave		0.3637			0.2000	1.5		20.0			
Benzoic acid	0.2088 0.2782	0.2293	0.2559	0.2777	0.2716	Lin1	-0.476	0.2775							0.9990		0.9900
Bis(2-chloroethoxy)methane	0.4399 0.4176	0.4288	0.4225	0.4284	0.4170	Ave		0.4257			0.3000	2.0		20.0			
2,4-Dichlorophenol	0.2961 0.3040	0.3068	0.3018	0.3102	0.3005	Ave		0.3032			0.2000	1.6		20.0			
1,2,4-Trichlorobenzene	0.3369 0.3279	0.3317	0.3302	0.3399	0.3234	Ave		0.3317				1.8		20.0			
Naphthalene	1.0780 0.9270	1.0538	1.0041	0.9735	0.9489	Ave		0.9976			0.7000	5.9		20.0			
4-Chloroaniline	0.3996 0.4424	0.4404	0.4521	0.4589	0.4434	Ave		0.4395			0.0100	4.7		20.0			
2,6-Dichlorophenol	0.2975 0.2961	0.2998	0.2983	0.3049	0.2987	Ave		0.2992				1.0		20.0			
Hexachlorobutadiene	0.1895 0.1850	0.1852	0.1884	0.1906	0.1865	Ave		0.1875			0.0100	1.2		20.0			
Caprolactam	0.1044 0.1147	0.1098	0.1144	0.1214	0.1146	Lin1	-0.072	0.1168			0.0100				0.9990		0.9900
4-Chloro-3-methylphenol	0.2951 0.3023	0.3079	0.3013	0.3125	0.3033	Ave		0.3038			0.2000	2.0		20.0			
2-Methylnaphthalene	0.6982 0.6417	0.6767	0.6643	0.6689	0.6478	Ave		0.6663			0.4000	3.1		20.0			

Note: The m1 coefficient is the same as Ave RRF for an Ave curve type.

FORM VI
GC/MS SEMI VOA BY INTERNAL STANDARD - INITIAL CALIBRATION DATA
CURVE EVALUATION

Lab Name: TestAmerica Buffalo Job No.: 480-89467-1 Analy Batch No.: 270613

SDG No.:

Instrument ID: HP5973X GC Column: RXI-5Sil MS ID: 0.25(mm) Heated Purge: (Y/N) N

Calibration Start Date: 10/23/2015 08:33 Calibration End Date: 10/23/2015 10:48 Calibration ID: 25373

ANALYTE	RRF					CURVE TYPE	COEFFICIENT			#	MIN RRF	%RSD	#	MAX %RSD	R^2 OR COD	#	MIN R^2 OR COD
	LVL 1 LVL 6	LVL 2	LVL 3	LVL 4	LVL 5		B	M1	M2								
1-Methylnaphthalene	0.6162 0.5852	0.6259	0.6049	0.6105	0.5926	Ave		0.6059			0.0100	2.5		20.0			
Hexachlorocyclopentadiene	0.4026 0.4281	0.4242	0.4283	0.4462	0.4356	Lin1	-0.174	0.4362			0.0500				1.0000		0.9900
1,2,4,5-Tetrachlorobenzene	0.5578 0.5458	0.5790	0.5521	0.5714	0.5553	Ave		0.5602			0.0100	2.2		20.0			
2,4,6-Trichlorophenol	0.3915 0.3984	0.3790	0.3902	0.4146	0.3961	Lin1	-0.119	0.4009			0.2000				0.9990		0.9900
2,4,5-Trichlorophenol	0.4049 0.4177	0.4084	0.4087	0.4287	0.4199	Lin1	-0.119	0.4207			0.2000				1.0000		0.9900
Biphenyl	1.4395 1.3264	1.4599	1.3874	1.3773	1.3423	Ave		1.3888			0.0100	3.8		20.0			
2-Chloronaphthalene	1.1749 1.1062	1.2056	1.1408	1.1590	1.1205	Ave		1.1511			0.8000	3.2		20.0			
2-Nitroaniline	0.3227 0.3545	0.3427	0.3465	0.3619	0.3539	Lin1	-0.199	0.3570			0.0100				1.0000		0.9900
Dimethyl phthalate	1.2855 1.2283	1.3381	1.2832	1.2882	1.2474	Ave		1.2784			0.0100	3.0		20.0			
1,3-Dinitrobenzene	0.0963 0.1265	0.1091	0.1198	0.1304	0.1244	Lin1	-0.199	0.1277							0.9990		0.9900
2,6-Dinitrotoluene	0.2704 0.3188	0.3112	0.3136	0.3294	0.3157	Lin1	-0.253	0.3226							1.0000		0.9900
Acenaphthylene	1.7771 1.6084	1.8131	1.7203	1.7029	1.6492	Ave		1.7118			0.9000	4.5		20.0			
3-Nitroaniline	0.3013 0.3521	0.3395	0.3479	0.3633	0.3508	Lin1	-0.286	0.3568			0.0100				1.0000		0.9900
Acenaphthene	1.1329 1.0163	1.1322	1.0667	1.0656	1.0447	Ave		1.0764			0.9000	4.4		20.0			
2,4-Dinitrophenol	0.1272 0.1936	0.1585	0.1796	0.1975	0.1922	Lin1	-0.860	0.1963			0.0100				0.9990		0.9900
4-Nitrophenol	0.1557 0.1777	0.1731	0.1762	0.1833	0.1788	Lin1	-0.253	0.1805			0.0100				1.0000		0.9900
2,4-Dinitrotoluene	0.3678 0.4223	0.4056	0.4071	0.4398	0.4226	Lin1	-0.340	0.4279			0.2000				0.9990		0.9900
Dibenzofuran	1.6847 1.4893	1.6785	1.5859	1.5559	1.5062	Ave		1.5834			0.8000	5.3		20.0			
2,3,4,6-Tetrachlorophenol	0.2718 0.3245	0.3059	0.3151	0.3293	0.3149	Lin1	-0.286	0.3246			0.0100				1.0000		0.9900
Diethyl phthalate	1.2244 1.1664	1.2732	1.2266	1.2300	1.1919	Ave		1.2188			0.0100	3.0		20.0			

Note: The m1 coefficient is the same as Ave RRF for an Ave curve type.

FORM VI
GC/MS SEMI VOA BY INTERNAL STANDARD - INITIAL CALIBRATION DATA
CURVE EVALUATION

Lab Name: TestAmerica Buffalo Job No.: 480-89467-1 Analy Batch No.: 270613

SDG No.:

Instrument ID: HP5973X GC Column: RXI-5Sil MS ID: 0.25(mm) Heated Purge: (Y/N) N

Calibration Start Date: 10/23/2015 08:33 Calibration End Date: 10/23/2015 10:48 Calibration ID: 25373

ANALYTE	RRF					CURVE TYPE	COEFFICIENT			#	MIN RRF	%RSD	#	MAX %RSD	R^2 OR COD	#	MIN R^2 OR COD
	LVL 1 LVL 6	LVL 2	LVL 3	LVL 4	LVL 5		B	M1	M2								
Hexadecane	0.9659 0.8230	0.9359	0.8955	0.8686	0.8434	Lin1	0.9657	0.8403			0.0100				0.9990		0.9900
4-Chlorophenyl phenyl ether	0.6669 0.6270	0.6533	0.6418	0.6514	0.6273	Ave		0.6446			0.4000	2.4		20.0			
4-Nitroaniline	0.3444 0.3575	0.3451	0.3489	0.3641	0.3520	Lin1	-0.101	0.3571			0.0100				1.0000		0.9900
Fluorene	1.3125 1.1933	1.3373	1.2601	1.2581	1.2290	Ave		1.2651			0.9000	4.2		20.0			
4,6-Dinitro-2-methylphenol	0.1110 0.1638	0.1367	0.1600	0.1702	0.1634	Lin1	-0.676	0.1678			0.0100				0.9990		0.9900
Diphenylamine	0.7113 0.5917	0.6862	0.6552	0.6232	0.6140	Ave		0.6469				7.1		20.0			
N-Nitrosodiphenylamine	0.6082 0.5059	0.5867	0.5602	0.5328	0.5250	Ave		0.5531			0.0100	7.1		20.0			
1,2-Diphenylhydrazine	1.2728 1.1775	1.2872	1.2251	1.2448	1.2024	Ave		1.2350				3.4		20.0			
trans-Azobenzene	0.7947 0.7267	0.7890	0.7679	0.7696	0.7480	Ave		0.7660				3.3		20.0			
4-Bromophenyl phenyl ether	0.2336 0.2304	0.2319	0.2313	0.2399	0.2325	Ave		0.2333			0.1000	1.5		20.0			
Hexachlorobenzene	0.2439 0.2429	0.2449	0.2411	0.2501	0.2429	Ave		0.2443			0.1000	1.3		20.0			
Atrazine	0.3708 0.3559	0.3670	0.3675	0.3783	0.3623	Lin1	0.0662	0.3636			0.0100				0.9990		0.9900
Pentachlorophenol	0.1009 0.1430	0.1156	0.1338	0.1430	0.1418	Lin1	-0.571	0.1440			0.0500				0.9990		0.9900
n-Octadecane	0.6067 0.5258	0.5788	0.5685	0.5547	0.5432	Ave		0.5630			0.0100	5.0		20.0			
Phenanthrene	1.2325 0.9912	1.1733	1.1074	1.0419	1.0354	Lin1	1.6028	1.0166			0.7000				0.9980		0.9900
Anthracene	1.1986 0.9991	1.1719	1.1064	1.0531	1.0470	Lin1	1.3604	1.0278			0.7000				0.9980		0.9900
Carbazole	1.1306 0.9490	1.1311	1.0579	1.0039	1.0082	Ave		1.0468			0.0100	7.0		20.0			
Di-n-butyl phthalate	1.2591 1.0812	1.2942	1.2445	1.1454	1.1528	Ave		1.1962			0.0100	6.9		20.0			
Fluoranthene	1.2526 1.0630	1.2754	1.1903	1.1240	1.1207	Ave		1.1710			0.6000	7.1		20.0			
Benzidine	0.0609 0.4619	0.3452	0.4154	0.4720	0.4471	Lin1	-2.204	0.4776							0.9990		0.9900

Note: The m1 coefficient is the same as Ave RRF for an Ave curve type.

FORM VI
GC/MS SEMI VOA BY INTERNAL STANDARD - INITIAL CALIBRATION DATA
CURVE EVALUATION

Lab Name: TestAmerica Buffalo Job No.: 480-89467-1 Analy Batch No.: 270613

SDG No.:

Instrument ID: HP5973X GC Column: RXI-5Sil MS ID: 0.25(mm) Heated Purge: (Y/N) N

Calibration Start Date: 10/23/2015 08:33 Calibration End Date: 10/23/2015 10:48 Calibration ID: 25373

ANALYTE	RRF					CURVE TYPE	COEFFICIENT			#	MIN RRF	%RSD	#	MAX %RSD	R^2 OR COD	#	MIN R^2 OR COD
	LVL 1 LVL 6	LVL 2	LVL 3	LVL 4	LVL 5		B	M1	M2								
Pyrene	1.2211 1.0557	1.2305	1.1685	1.1349	1.0916	Ave		1.1504			0.6000	6.1		20.0			
Butyl benzyl phthalate	0.5524 0.5480	0.5540	0.5655	0.5871	0.5552	Lin1	-0.018	0.5613			0.0100				0.9990		0.9900
Bis(2-ethylhexyl) phthalate	0.7847 0.7578	0.8018	0.8039	0.8093	0.7774	Lin1	0.1840	0.7799			0.0100				0.9990		0.9900
3,3'-Dichlorobenzidine	0.4105 0.4317	0.4453	0.4299	0.4505	0.4333	Lin1	-0.083	0.4377			0.0100				0.9990		0.9900
Benzo[a]anthracene	1.1732 1.0590	1.1988	1.1416	1.1324	1.0802	Ave		1.1309			0.8000	4.7		20.0			
Chrysene	1.1639 0.9977	1.1346	1.0726	1.0540	1.0239	Ave		1.0745			0.7000	6.0		20.0			
Di-n-octyl phthalate	1.3400 1.2456	1.3785	1.3402	1.3196	1.2985	Lin1	0.7016	1.2852			0.0100				0.9990		0.9900
Benzo[b]fluoranthene	1.1320 1.1333	1.2021	1.2355	1.2451	1.1326	Lin1	0.1716	1.1715			0.7000				0.9970		0.9900
Benzo[k]fluoranthene	1.2739 1.1655	1.2260	1.1662	1.2031	1.2554	Ave		1.2150			0.7000	3.7		20.0			
Benzo[a]pyrene	1.1311 1.0967	1.1286	1.1126	1.1472	1.1173	Ave		1.1223			0.7000	1.6		20.0			
Dibenz(a,h)anthracene	1.0495 1.0678	1.0803	1.0803	1.1085	1.1026	Ave		1.0815				2.0		20.0			
Indeno[1,2,3-cd]pyrene	1.2628 1.2501	1.2758	1.2576	1.2846	1.2833	Ave		1.2691			0.5000	1.1		20.0			
Benzo[g,h,i]perylene	1.0257 1.0474	1.0593	1.0468	1.0723	1.0739	Ave		1.0542			0.5000	1.7		20.0			
2-Fluorophenol (Surr)	1.4587 1.4473	1.4461	1.4252	1.4878	1.4365	Ave		1.4503				1.5		20.0			
Phenol-d5 (Surr)	1.6946 1.6916	1.7052	1.6626	1.7123	1.7084	Ave		1.6958				1.1		20.0			
Nitrobenzene-d5 (Surr)	0.3699 0.3790	0.3765	0.3835	0.3914	0.3785	Ave		0.3798				1.9		20.0			
2-Fluorobiphenyl	1.3658 1.2542	1.3787	1.3261	1.3257	1.2781	Ave		1.3214				3.7		20.0			
2,4,6-Tribromophenol (Surr)	0.1166 0.1215	0.1118	0.1164	0.1249	0.1212	Lin1	-0.063	0.1219							0.9990		0.9900
p-Terphenyl-d14 (Surr)	0.8522 0.8035	0.8624	0.8434	0.8504	0.8105	Ave		0.8371				2.9		20.0			

Note: The m1 coefficient is the same as Ave RRF for an Ave curve type.

FORM VI
GC/MS SEMI VOA BY INTERNAL STANDARD - INITIAL CALIBRATION DATA
RESPONSE AND CONCENTRATION

Lab Name: TestAmerica Buffalo Job No.: 480-89467-1 Analy Batch No.: 270613

SDG No.:

Instrument ID: HP5973X GC Column: RXI-5Sil MS ID: 0.25(mm) Heated Purge: (Y/N) N

Calibration Start Date: 10/23/2015 08:33 Calibration End Date: 10/23/2015 10:48 Calibration ID: 25373

Calibration Files:

LEVEL:	LAB SAMPLE ID:	LAB FILE ID:
Level 1	IC 480-270613/3	X009013899.D
Level 2	IC 480-270613/4	X009013900.D
Level 3	ICIS 480-270613/5	X009013901.D
Level 4	IC 480-270613/6	X009013902.D
Level 5	IC 480-270613/7	X009013903.D
Level 6	IC 480-270613/8	X009013904.D

ANALYTE	IS REF	CURVE TYPE	RESPONSE					CONCENTRATION (NG/UL)				
			LVL 1 LVL 6	LVL 2	LVL 3	LVL 4	LVL 5	LVL 1 LVL 6	LVL 2	LVL 3	LVL 4	LVL 5
1,4-Dioxane	DCB	Ave	26028 564061	96760	323288	527812	461418	5.00 120	20.0	50.0	80.0	100
N-Nitrosodimethylamine	DCB	Ave	33508 640349	111760	370461	598314	526494	5.00 120	20.0	50.0	80.0	100
Pyridine	DCB	Ave	58701 1160497	202102	673015	1072059	956592	5.00 120	20.0	50.0	80.0	100
Benzaldehyde	DCB	Lin1	20573 478190	75791	263275	451536	400922	5.00 120	20.0	50.0	80.0	100
Phenol	DCB	Ave	81408 1554163	281557	917689	1425038	1296602	5.00 120	20.0	50.0	80.0	100
Aniline	DCB	Ave	87821 1908376	339903	1123007	1774802	1596404	5.00 120	20.0	50.0	80.0	100
Bis(2-chloroethyl)ether	DCB	Ave	63883 1265772	227063	734103	1163983	1047679	5.00 120	20.0	50.0	80.0	100
2-Chlorophenol	DCB	Ave	66313 1284289	225941	760957	1187814	1069946	5.00 120	20.0	50.0	80.0	100
n-Decane	DCB	Ave	85738 1534003	286760	919787	1426318	1299045	5.00 120	20.0	50.0	80.0	100
1,3-Dichlorobenzene	DCB	Ave	71250 1377330	241570	819113	1273742	1146125	5.00 120	20.0	50.0	80.0	100
1,4-Dichlorobenzene	DCB	Ave	72659 1402581	251278	833130	1302724	1166951	5.00 120	20.0	50.0	80.0	100
Benzyl alcohol	DCB	Ave	39172 831196	145411	486244	769630	687855	5.00 120	20.0	50.0	80.0	100
1,2-Dichlorobenzene	DCB	Ave	70277 1305174	230981	774824	1208651	1087242	5.00 120	20.0	50.0	80.0	100
2-Methylphenol	DCB	Ave	57249 1135212	198428	658093	1039690	948909	5.00 120	20.0	50.0	80.0	100
bis (2-chloroisopropyl) ether	DCB	Ave	90822 1576661	303628	955755	1483633	1348279	5.00 120	20.0	50.0	80.0	100
Indene	PHN	Ave	118921 2174384	404157	1312844	2024784	1846365	5.00 120	20.0	50.0	80.0	100

FORM VI
GC/MS SEMI VOA BY INTERNAL STANDARD - INITIAL CALIBRATION DATA
RESPONSE AND CONCENTRATION

Lab Name: TestAmerica Buffalo Job No.: 480-89467-1 Analy Batch No.: 270613

SDG No.:

Instrument ID: HP5973X GC Column: RXI-5Sil MS ID: 0.25(mm) Heated Purge: (Y/N) N

Calibration Start Date: 10/23/2015 08:33 Calibration End Date: 10/23/2015 10:48 Calibration ID: 25373

ANALYTE	IS REF	CURVE TYPE	RESPONSE					CONCENTRATION (NG/UL)				
			LVL 1 LVL 6	LVL 2	LVL 3	LVL 4	LVL 5	LVL 1 LVL 6	LVL 2	LVL 3	LVL 4	LVL 5
4-Methylphenol	DCB	Ave	59536 1161311	208059	682486	1072575	972947	5.00 120	20.0	50.0	80.0	100
N-Nitrosodi-n-propylamine	DCB	Ave	43445 875921	153882	497919	799796	719415	5.00 120	20.0	50.0	80.0	100
Acetophenone	DCB	Ave	88035 1618719	298296	950675	1484396	1354381	5.00 120	20.0	50.0	80.0	100
Hexachloroethane	DCB	Ave	27687 551390	93482	319980	502779	453121	5.00 120	20.0	50.0	80.0	100
Nitrobenzene	NPT	Ave	64343 1249016	218746	714677	1140879	1035010	5.00 120	20.0	50.0	80.0	100
Isophorone	NPT	Ave	114040 2193557	392333	1279375	2011035	1838853	5.00 120	20.0	50.0	80.0	100
2-Nitrophenol	NPT	Lin1	30068 681786	108114	384512	617358	556329	5.00 120	20.0	50.0	80.0	100
2,4-Dimethylphenol	NPT	Ave	60133 1206796	213347	694705	1106536	1001411	5.00 120	20.0	50.0	80.0	100
Benzoic acid	NPT	Lin1	34887 933231	133060	488780	825387	757755	5.00 120	20.0	50.0	80.0	100
Bis(2-chloroethoxy)methane	NPT	Ave	73499 1400803	248786	807033	1273553	1163286	5.00 120	20.0	50.0	80.0	100
2,4-Dichlorophenol	NPT	Ave	49470 1019524	178041	576541	922108	838192	5.00 120	20.0	50.0	80.0	100
1,2,4-Trichlorobenzene	NPT	Ave	56297 1099672	192467	630642	1010336	902070	5.00 120	20.0	50.0	80.0	100
Naphthalene	NPT	Ave	180115 3109464	611471	1917973	2893580	2646999	5.00 120	20.0	50.0	80.0	100
4-Chloroaniline	NPT	Ave	66761 1483896	255539	863498	1364178	1236930	5.00 120	20.0	50.0	80.0	100
2,6-Dichlorophenol	NPT	Ave	49703 993082	173965	569863	906242	833281	5.00 120	20.0	50.0	80.0	100
Hexachlorobutadiene	NPT	Ave	31660 620358	107446	359866	566432	520374	5.00 120	20.0	50.0	80.0	100
Caprolactam	NPT	Lin1	17448 384870	63703	218559	360730	319695	5.00 120	20.0	50.0	80.0	100
4-Chloro-3-methylphenol	NPT	Ave	49312 1014119	178667	575572	928835	846144	5.00 120	20.0	50.0	80.0	100
2-Methylnaphthalene	NPT	Ave	116652 2152342	392664	1269005	1988386	1807015	5.00 120	20.0	50.0	80.0	100
1-Methylnaphthalene	NPT	Ave	102947 1962936	363186	1155500	1814599	1653063	5.00 120	20.0	50.0	80.0	100
Hexachlorocyclopentadiene	ANT	Lin1	36754 783444	134160	447486	724833	661791	5.00 120	20.0	50.0	80.0	100

FORM VI
GC/MS SEMI VOA BY INTERNAL STANDARD - INITIAL CALIBRATION DATA
RESPONSE AND CONCENTRATION

Lab Name: TestAmerica Buffalo Job No.: 480-89467-1 Analy Batch No.: 270613

SDG No.:

Instrument ID: HP5973X GC Column: RXI-5Sil MS ID: 0.25(mm) Heated Purge: (Y/N) N

Calibration Start Date: 10/23/2015 08:33 Calibration End Date: 10/23/2015 10:48 Calibration ID: 25373

ANALYTE	IS REF	CURVE TYPE	RESPONSE					CONCENTRATION (NG/UL)				
			LVL 1 LVL 6	LVL 2	LVL 3	LVL 4	LVL 5	LVL 1 LVL 6	LVL 2	LVL 3	LVL 4	LVL 5
1,2,4,5-Tetrachlorobenzene	ANT	Ave	50923 999006	183137	576884	928153	843780	5.00 120	20.0	50.0	80.0	100
2,4,6-Trichlorophenol	ANT	Lin1	35741 729073	119866	407747	673483	601857	5.00 120	20.0	50.0	80.0	100
2,4,5-Trichlorophenol	ANT	Lin1	36968 764433	129158	427083	696476	638046	5.00 120	20.0	50.0	80.0	100
Biphenyl	ANT	Ave	131425 2427625	461720	1449689	2237376	2039495	5.00 120	20.0	50.0	80.0	100
2-Chloronaphthalene	ANT	Ave	107265 2024501	381292	1191975	1882772	1702384	5.00 120	20.0	50.0	80.0	100
2-Nitroaniline	ANT	Lin1	29458 648801	108380	362052	587947	537712	5.00 120	20.0	50.0	80.0	100
Dimethyl phthalate	ANT	Ave	117365 2248039	423201	1340761	2092562	1895323	5.00 120	20.0	50.0	80.0	100
1,3-Dinitrobenzene	NPT	Lin1	16094 424340	63299	228826	387694	346893	5.00 120	20.0	50.0	80.0	100
2,6-Dinitrotoluene	ANT	Lin1	24683 583494	98425	327672	535156	479670	5.00 120	20.0	50.0	80.0	100
Acenaphthylene	ANT	Ave	162253 2943783	573438	1797472	2766371	2505670	5.00 120	20.0	50.0	80.0	100
3-Nitroaniline	ANT	Lin1	27505 644405	107379	363472	590143	532973	5.00 120	20.0	50.0	80.0	100
Acenaphthene	ANT	Ave	103434 1860047	358100	1114531	1730991	1587305	5.00 120	20.0	50.0	80.0	100
2,4-Dinitrophenol	ANT	Lin1	23225 708821	100286	375285	641806	584017	10.0 240	40.0	100	160	200
4-Nitrophenol	ANT	Lin1	28425 650293	109514	368118	595631	543369	10.0 240	40.0	100	160	200
2,4-Dinitrotoluene	ANT	Lin1	33582 772966	128291	425401	714444	642079	5.00 120	20.0	50.0	80.0	100
Dibenzofuran	ANT	Ave	153810 2725663	530855	1657029	2527477	2288524	5.00 120	20.0	50.0	80.0	100
2,3,4,6-Tetrachlorophenol	ANT	Lin1	24816 593831	96744	329266	534976	478385	5.00 120	20.0	50.0	80.0	100
Diethyl phthalate	ANT	Ave	111790 2134812	402679	1281670	1998092	1810884	5.00 120	20.0	50.0	80.0	100
Hexadecane	ANT	Lin1	88190 1506174	296010	935654	1411041	1281472	5.00 120	20.0	50.0	80.0	100
4-Chlorophenyl phenyl ether	ANT	Ave	60892 1147469	206621	670570	1058167	953135	5.00 120	20.0	50.0	80.0	100
4-Nitroaniline	ANT	Lin1	31441 654317	109142	364542	591506	534757	5.00 120	20.0	50.0	80.0	100

FORM VI
GC/MS SEMI VOA BY INTERNAL STANDARD - INITIAL CALIBRATION DATA
RESPONSE AND CONCENTRATION

Lab Name: TestAmerica Buffalo Job No.: 480-89467-1 Analy Batch No.: 270613

SDG No.:

Instrument ID: HP5973X GC Column: RXI-5Sil MS ID: 0.25(mm) Heated Purge: (Y/N) N

Calibration Start Date: 10/23/2015 08:33 Calibration End Date: 10/23/2015 10:48 Calibration ID: 25373

ANALYTE	IS REF	CURVE TYPE	RESPONSE					CONCENTRATION (NG/UL)				
			LVL 1 LVL 6	LVL 2	LVL 3	LVL 4	LVL 5	LVL 1 LVL 6	LVL 2	LVL 3	LVL 4	LVL 5
Fluorene	ANT	Ave	119830 2183935	422968	1316688	2043817	1867237	5.00 120	20.0	50.0	80.0	100
4,6-Dinitro-2-methylphenol	PHN	Lin1	32475 971310	141091	533396	894206	797932	10.0 240	40.0	100	160	200
Diphenylamine	PHN	Ave	177867 3000456	605432	1867740	2800101	2564523	8.55 205	34.2	85.5	137	171
N-Nitrosodiphenylamine	PHN	Ave	177867 3000456	605432	1867740	2800101	2564523	10.0 240	40.0	100	160	200
1,2-Diphenylhydrazine	ANT	Ave	116210 2154986	407100	1280034	2022145	1826878	5.00 120	20.0	50.0	80.0	100
trans-Azobenzene	PHN	Ave	116210 2154986	407100	1280034	2022145	1826878	5.00 120	20.0	50.0	80.0	100
4-Bromophenyl phenyl ether	PHN	Ave	34156 683077	119680	385503	630244	567868	5.00 120	20.0	50.0	80.0	100
Hexachlorobenzene	PHN	Ave	35661 720277	126363	401843	657067	593306	5.00 120	20.0	50.0	80.0	100
Atrazine	ANT	Lin1	33857 651291	116071	384042	614578	550399	5.00 120	20.0	50.0	80.0	100
Pentachlorophenol	PHN	Lin1	29514 848140	119308	445978	751560	692527	10.0 240	40.0	100	160	200
n-Octadecane	PHN	Ave	88721 1559318	298641	947712	1457465	1326600	5.00 120	20.0	50.0	80.0	100
Phenanthrene	PHN	Lin1	180222 2939175	605382	1845939	2737775	2528797	5.00 120	20.0	50.0	80.0	100
Anthracene	PHN	Lin1	175275 2962749	604700	1844391	2767086	2557296	5.00 120	20.0	50.0	80.0	100
Carbazole	PHN	Ave	165326 2814027	583624	1763414	2637727	2462294	5.00 120	20.0	50.0	80.0	100
Di-n-butyl phthalate	PHN	Ave	184114 3206091	667806	2074479	3009743	2815577	5.00 120	20.0	50.0	80.0	100
Fluoranthene	PHN	Ave	183159 3152219	658072	1984145	2953525	2737300	5.00 120	20.0	50.0	80.0	100
Benzidine	CRY	Lin1	9675 1431770	194229	752428	1279927	1171556	5.00 120	20.0	50.0	80.0	100
Pyrene	CRY	Ave	194086 3272676	692375	2116523	3077387	2860261	5.00 120	20.0	50.0	80.0	100
Butyl benzyl phthalate	CRY	Lin1	87808 1698812	311720	1024391	1592040	1454756	5.00 120	20.0	50.0	80.0	100
Bis(2-ethylhexyl) phthalate	CRY	Lin1	124719 2349197	451162	1456236	2194476	2037083	5.00 120	20.0	50.0	80.0	100
3,3'-Dichlorobenzidine	CRY	Lin1	65245 1338355	250568	778638	1221710	1135502	5.00 120	20.0	50.0	80.0	100

FORM VI
GC/MS SEMI VOA BY INTERNAL STANDARD - INITIAL CALIBRATION DATA
RESPONSE AND CONCENTRATION

Lab Name: TestAmerica Buffalo Job No.: 480-89467-1 Analy Batch No.: 270613

SDG No.:

Instrument ID: HP5973X GC Column: RXI-5Sil MS ID: 0.25(mm) Heated Purge: (Y/N) N

Calibration Start Date: 10/23/2015 08:33 Calibration End Date: 10/23/2015 10:48 Calibration ID: 25373

ANALYTE	IS REF	CURVE TYPE	RESPONSE					CONCENTRATION (NG/UL)				
			LVL 1 LVL 6	LVL 2	LVL 3	LVL 4	LVL 5	LVL 1 LVL 6	LVL 2	LVL 3	LVL 4	LVL 5
Benzo[a]anthracene	CRY	Ave	186472 3282854	674516	2067914	3070619	2830358	5.00 120	20.0	50.0	80.0	100
Chrysene	CRY	Ave	185000 3092739	638418	1942926	2857969	2682843	5.00 120	20.0	50.0	80.0	100
Di-n-octyl phthalate	CRY	Lin1	212987 3861152	775601	2427667	3578121	3402521	5.00 120	20.0	50.0	80.0	100
Benzo[b]fluoranthene	PRY	Lin1	171061 3432908	656217	2180983	3229871	2824695	5.00 120	20.0	50.0	80.0	100
Benzo[k]fluoranthene	PRY	Ave	192499 3530364	669248	2058669	3120973	3130900	5.00 120	20.0	50.0	80.0	100
Benzo[a]pyrene	PRY	Ave	170918 3321924	616089	1963952	2976080	2786599	5.00 120	20.0	50.0	80.0	100
Dibenz(a,h)anthracene	PRY	Ave	158591 3234327	589700	1907059	2875665	2749848	5.00 120	20.0	50.0	80.0	100
Indeno[1,2,3-cd]pyrene	PRY	Ave	190828 3786598	696452	2219963	3332442	3200498	5.00 120	20.0	50.0	80.0	100
Benzo[g,h,i]perylene	PRY	Ave	154988 3172555	578253	1847803	2781774	2678158	5.00 120	20.0	50.0	80.0	100
2-Fluorophenol (Surr)	DCB	Ave	65002 1298005	224581	756882	1209378	1063928	5.00 120	20.0	50.0	80.0	100
Phenol-d5 (Surr)	DCB	Ave	75514 1517077	264812	882969	1391863	1265322	5.00 120	20.0	50.0	80.0	100
Nitrobenzene-d5 (Surr)	NPT	Ave	61797 1271296	218477	732564	1163487	1055987	5.00 120	20.0	50.0	80.0	100
2-Fluorobiphenyl	ANT	Ave	124697 2295352	436044	1385559	2153634	1941884	5.00 120	20.0	50.0	80.0	100
2,4,6-Tribromophenol (Surr)	PHN	Lin1	17043 360322	57670	193986	328064	296054	5.00 120	20.0	50.0	80.0	100
p-Terphenyl-d14 (Surr)	CRY	Ave	135459 2490897	485226	1527782	2305848	2123660	5.00 120	20.0	50.0	80.0	100

Curve Type Legend:
Ave = Average ISTD
Lin1 = Linear 1/conc ISTD

FORM VI
RESOLUTION CHECK SUMMARY

Lab Name: TestAmerica Buffalo Job No.: 480-89467-1

SDG No.:

Lab Sample ID (1): CCVIS 480-273506/3 Instrument ID (1): HP5973X

GC Column (1): RXI-5Sil MS ID: 0.25(mm) Date Analyzed (1): 11/05/2015 10:42

ANALYTE	RT	RESOLUTION (%)
2-Fluorophenol (Surr)	5.21	100.0
Phenol-d5 (Surr)	6.34	100.0
Nitrobenzene-d5 (Surr)	7.48	100.0
Naphthalene	8.38	100.0
2-Fluorobiphenyl	9.62	100.0
Acenaphthylene	10.26	100.0
Acenaphthene	10.46	100.0
Fluorene	11.01	100.0
2,4,6-Tribromophenol (Surr)	11.25	100.0
Phenanthrene	11.96	100.0
Anthracene	12.01	100.0
Fluoranthene	13.05	100.0
Pyrene	13.26	100.0
p-Terphenyl-d14 (Surr)	13.35	100.0
Benzo[a]anthracene	14.33	100.0
Chrysene	14.36	100.0
Benzo[b]fluoranthene	15.43	36.60
Benzo[k]fluoranthene	15.46	100.0
Benzo[a]pyrene	15.84	100.0
Indeno[1,2,3-cd]pyrene	17.50	100.0
Dibenz(a,h)anthracene	17.50	100.0

FORM VI
RESOLUTION CHECK SUMMARY

Lab Name: TestAmerica Buffalo Job No.: 480-89467-1

SDG No.:

Lab Sample ID (1): CCVIS 480-273910/3 Instrument ID (1): HP5973V

GC Column (1): RXI-5Sil MS ID: 0.25(mm) Date Analyzed (1): 11/09/2015 12:57

ANALYTE	RT	RESOLUTION (%)
2-Fluorophenol (Surr)	5.73	100.0
Phenol-d5 (Surr)	6.50	100.0
Nitrobenzene-d5 (Surr)	7.30	100.0
Naphthalene	7.94	100.0
2-Fluorobiphenyl	8.81	100.0
Acenaphthylene	9.30	100.0
Acenaphthene	9.45	100.0
Fluorene	9.88	100.0
2,4,6-Tribromophenol (Surr)	10.09	100.0
Phenanthrene	10.71	100.0
Anthracene	10.75	100.0
Fluoranthene	11.81	100.0
Pyrene	12.07	100.0
p-Terphenyl-d14 (Surr)	12.16	100.0
Benzo[a]anthracene	13.58	100.0
Chrysene	13.64	100.0
Benzo[b]fluoranthene	15.30	19.20
Benzo[k]fluoranthene	15.35	100.0
Benzo[a]pyrene	15.86	100.0
Indeno[1,2,3-cd]pyrene	18.05	100.0
Dibenz(a,h)anthracene	18.06	100.0

FORM VI
RESOLUTION CHECK SUMMARY

Lab Name: TestAmerica Buffalo Job No.: 480-89467-1

SDG No.:

Lab Sample ID (1): CCVIS 480-273999/3 Instrument ID (1): HP5973V

GC Column (1): RXI-5Sil MS ID: 0.25(mm) Date Analyzed (1): 11/10/2015 11:07

ANALYTE	RT	RESOLUTION (%)
2-Fluorophenol (Surr)	5.74	100.0
Phenol-d5 (Surr)	6.51	100.0
Nitrobenzene-d5 (Surr)	7.30	100.0
Naphthalene	7.95	100.0
2-Fluorobiphenyl	8.81	100.0
Acenaphthylene	9.30	100.0
Acenaphthene	9.45	100.0
Fluorene	9.88	100.0
2,4,6-Tribromophenol (Surr)	10.09	100.0
Phenanthrene	10.71	100.0
Anthracene	10.75	100.0
Fluoranthene	11.81	100.0
Pyrene	12.07	100.0
p-Terphenyl-d14 (Surr)	12.16	100.0
Benzo[a]anthracene	13.59	100.0
Chrysene	13.64	100.0
Benzo[b]fluoranthene	15.31	19.50
Benzo[k]fluoranthene	15.35	100.0
Benzo[a]pyrene	15.87	100.0
Indeno[1,2,3-cd]pyrene	18.07	100.0
Dibenz(a,h)anthracene	18.08	100.0

FORM VI
RESOLUTION CHECK SUMMARY

Lab Name: TestAmerica Buffalo Job No.: 480-89467-1

SDG No.:

Lab Sample ID (1): CCVIS 480-274392/3 Instrument ID (1): HP5973V

GC Column (1): RXI-5Sil MS ID: 0.25(mm) Date Analyzed (1): 11/11/2015 12:49

ANALYTE	RT	RESOLUTION (%)
2-Fluorophenol (Surr)	5.72	100.0
Phenol-d5 (Surr)	6.49	100.0
Nitrobenzene-d5 (Surr)	7.29	100.0
Naphthalene	7.94	100.0
2-Fluorobiphenyl	8.80	100.0
Acenaphthylene	9.29	100.0
Acenaphthene	9.44	100.0
Fluorene	9.88	100.0
2,4,6-Tribromophenol (Surr)	10.08	100.0
Phenanthrene	10.70	100.0
Anthracene	10.75	100.0
Fluoranthene	11.80	100.0
Pyrene	12.06	100.0
p-Terphenyl-d14 (Surr)	12.15	100.0
Benzo[a]anthracene	13.57	100.0
Chrysene	13.63	100.0
Benzo[b]fluoranthene	15.29	16.20
Benzo[k]fluoranthene	15.33	100.0
Benzo[a]pyrene	15.85	100.0
Indeno[1,2,3-cd]pyrene	18.03	100.0
Dibenz(a,h)anthracene	18.04	100.0

FORM VII
GC/MS SEMI VOA CONTINUING CALIBRATION DATA

Lab Name: TestAmerica Buffalo | Job No.: 480-89467-1
SDG No.:
Lab Sample ID: CCVIS 480-273910/3 | Calibration Date: 11/09/2015 12:57
Instrument ID: HP5973V | Calib Start Date: 10/26/2015 19:36
GC Column: RXI-5Sil MS ID: 0.25(mm) | Calib End Date: 10/26/2015 22:31
Lab File ID: V54272.D | Conc. Units: ug/L

ANALYTE	CURVE TYPE	AVE RRF	RRF	MIN RRF	CALC AMOUNT	SPIKE AMOUNT	%D	MAX %D
1,4-Dioxane	Lin1		0.4301	0.0100	3670	4000	-8.4	50.0
N-Nitrosodimethylamine	Lin1		0.9124	0.0100	4940	4000	23.5	25.0
Pyridine	Ave	1.384	1.393	0.0100	4030	4000	0.6	50.0
Benzaldehyde	Lin1		0.3101	0.0100	1820	4000	-54.4*	40.0
Phenol	Ave	1.482	1.309	0.8000	3530	4000	-11.7	20.0
Aniline	Ave	1.905	1.685	0.0100	3540	4000	-11.5	50.0
Bis(2-chloroethyl)ether	Ave	1.283	1.176	0.7000	3670	4000	-8.4	20.0
n-Decane	Ave	1.986	1.864	0.0100	3760	4000	-6.1	40.0
2-Chlorophenol	Lin1		1.260	0.8000	3850	4000	-3.8	20.0
1,3-Dichlorobenzene	Ave	1.454	1.460	0.0100	4020	4000	0.4	20.0
1,4-Dichlorobenzene	Ave	1.499	1.463	0.0100	3900	4000	-2.4	20.0
Benzyl alcohol	Ave	0.8436	0.6782	0.0100	3220	4000	-19.6	50.0
1,2-Dichlorobenzene	Ave	1.407	1.378	0.0100	3920	4000	-2.0	20.0
2-Methylphenol	Ave	1.154	0.9801	0.7000	3400	4000	-15.1	20.0
bis (2-chloroisopropyl) ether	Ave	2.585	2.388	0.0100	3700	4000	-7.6	20.0
Indene	Ave	0.6110	0.6179		4040	4000	1.1	
4-Methylphenol	Ave	1.192	0.9481	0.6000	3180	4000	-20.4*	20.0
N-Nitrosodi-n-propylamine	Ave	0.8006	0.6586	0.5000	3290	4000	-17.7	20.0
Acetophenone	Ave	1.671	1.504	0.0100	3600	4000	-10.0	40.0
Hexachloroethane	Ave	0.5976	0.6397	0.3000	4280	4000	7.0	20.0
Nitrobenzene	Ave	0.3393	0.3478	0.2000	4100	4000	2.5	20.0
Isophorone	Ave	0.5778	0.5634	0.4000	3900	4000	-2.5	20.0
2,4-Dimethylphenol	Ave	0.3293	0.3306	0.2000	4020	4000	0.4	20.0
2-Nitrophenol	Lin1		0.1993	0.1000	4000	4000	-0.1	20.0
Benzoic acid	Lin1		0.2333	0.0100	3750	4000	-6.3	25.0
Bis(2-chloroethoxy)methane	Ave	0.3772	0.3383	0.3000	3590	4000	-10.3	20.0
2,4-Dichlorophenol	Ave	0.2857	0.2779	0.2000	3890	4000	-2.7	20.0
1,2,4-Trichlorobenzene	Ave	0.3314	0.3515	0.0100	4240	4000	6.0	20.0
Naphthalene	Ave	1.021	0.9712	0.7000	3810	4000	-4.9	20.0
4-Chloroaniline	Ave	0.5492	0.4227	0.0100	3080	4000	-23.0*	20.0
2,6-Dichlorophenol	Ave	0.2874	0.2783	0.0100	3870	4000	-3.2	50.0
Hexachlorobutadiene	Ave	0.1962	0.2330	0.0100	4750	4000	18.8	20.0
Caprolactam	Lin1		0.1104	0.0100	3770	4000	-5.6	40.0
4-Chloro-3-methylphenol	Ave	0.2785	0.3226	0.2000	4630	4000	15.8	20.0
2-Methylnaphthalene	Ave	0.6860	0.6750	0.4000	3940	4000	-1.6	20.0
1-Methylnaphthalene	Ave	0.6344	0.6259	0.0100	3950	4000	-1.3	40.0
Hexachlorocyclopentadiene	Lin1		0.3931	0.0500	3530	4000	-11.8	20.0
1,2,4,5-Tetrachlorobenzene	Ave	0.5662	0.5704	0.0100	4030	4000	0.7	40.0
2,4,6-Trichlorophenol	Ave	0.3808	0.3988	0.2000	4190	4000	4.7	20.0
2,4,5-Trichlorophenol	Ave	0.4014	0.4271	0.2000	4260	4000	6.4	20.0

FORM VII
GC/MS SEMI VOA CONTINUING CALIBRATION DATA

Lab Name: TestAmerica Buffalo | Job No.: 480-89467-1
SDG No.:
Lab Sample ID: CCVIS 480-273910/3 | Calibration Date: 11/09/2015 12:57
Instrument ID: HP5973V | Calib Start Date: 10/26/2015 19:36
GC Column: RXI-5Sil MS ID: 0.25(mm) | Calib End Date: 10/26/2015 22:31
Lab File ID: V54272.D | Conc. Units: ug/L

ANALYTE	CURVE TYPE	AVE RRF	RRF	MIN RRF	CALC AMOUNT	SPIKE AMOUNT	%D	MAX %D
Biphenyl	Ave	1.513	1.520	0.0100	4020	4000	0.4	40.0
2-Chloronaphthalene	Ave	1.163	1.147	0.8000	3940	4000	-1.4	25.0
2-Nitroaniline	Lin1		0.4076	0.0100	4370	4000	9.2	20.0
Dimethyl phthalate	Ave	1.303	1.425	0.0100	4380	4000	9.4	20.0
1,3-Dinitrobenzene	Lin1		0.1509	0.0100	4360	4000	9.0	50.0
2,6-Dinitrotoluene	Lin1		0.3269	0.2000	4090	4000	2.2	20.0
Acenaphthylene	Ave	1.856	1.984	0.9000	4280	4000	6.9	20.0
3-Nitroaniline	Lin1		0.3759	0.0100	4050	4000	1.2	20.0
2,4-Dinitrophenol	Lin1		0.1815	0.0100	6870	8000	-14.2	20.0
Acenaphthene	Ave	1.189	1.245	0.0100	4190	4000	4.7	20.0
4-Nitrophenol	Lin1		0.2170	0.0100	9860	8000	23.2*	20.0
2,4-Dinitrotoluene	Lin1		0.4642	0.0100	4390	4000	9.7	20.0
Dibenzofuran	Ave	1.664	1.797	0.8000	4320	4000	8.0	20.0
2,3,4,6-Tetrachlorophenol	Lin1		0.3311	0.0100	3820	4000	-4.5	40.0
Hexadecane	Ave	0.6634	0.6502	0.0100	3920	4000	-2.0	40.0
Diethyl phthalate	Lin1		1.590	0.0100	3540	4000	-11.4	20.0
4-Chlorophenyl phenyl ether	Ave	0.6674	0.7282	0.4000	4360	4000	9.1	20.0
4-Nitroaniline	Lin1		0.3642	0.0100	4030	4000	0.8	20.0
Fluorene	Ave	1.384	1.429	0.9000	4130	4000	3.3	20.0
4,6-Dinitro-2-methylphenol	Lin1		0.1468	0.0100	7840	8000	-2.0	20.0
Diphenylamine	Ave	0.6569	0.6517	0.0100	6790	6840	-0.8	50.0
N-Nitrosodiphenylamine	Ave	0.5617	0.5572	0.0100	7940	8000	-0.8	20.0
1,2-Diphenylhydrazine	Ave	0.7097	0.7188	0.0100	4050	4000	1.3	25.0
trans-Azobenzene	Ave	0.7097	0.7188	0.0100	4050	4000	1.3	40.0
4-Bromophenyl phenyl ether	Ave	0.2476	0.2587	0.1000	4180	4000	4.5	20.0
Atrazine	Lin1		0.3950	0.0100	4270	4000	6.9	25.0
Hexachlorobenzene	Ave	0.2903	0.3254	0.1000	4480	4000	12.1	20.0
n-Octadecane	Ave	0.6565	0.6798	0.0100	4140	4000	3.5	40.0
Pentachlorophenol	Lin1		0.1185	0.0500	5250	8000	-34.4*	20.0
Phenanthrene	Ave	1.090	1.098	0.7000	4030	4000	0.7	20.0
Anthracene	Ave	1.080	1.089	0.7000	4030	4000	0.8	20.0
Carbazole	Ave	1.029	1.030	0.0100	4000	4000	0.0	20.0
Di-n-butyl phthalate	Lin1		1.533	0.0100	4660	4000	16.5	20.0
Fluoranthene	Ave	1.199	1.270	0.6000	4230	4000	5.8	20.0
Benzidine	Lin1		0.2963	0.0100	2110	4000	-47.2*	25.0
Pyrene	Ave	1.226	1.243	0.6000	4050	4000	1.3	20.0
Butyl benzyl phthalate	Lin1		0.6800	0.0100	4440	4000	11.0	20.0
Bis(2-ethylhexyl) phthalate	Lin1		0.9786	0.0100	4520	4000	12.9	20.0
3,3'-Dichlorobenzidine	Lin1		0.4449	0.0100	3950	4000	-1.2	20.0
Benzo[a]anthracene	Ave	1.123	1.148	0.8000	4090	4000	2.3	20.0
Chrysene	Ave	1.063	1.071	0.7000	4030	4000	0.8	20.0

FORM VII
GC/MS SEMI VOA CONTINUING CALIBRATION DATA

Lab Name: TestAmerica Buffalo Job No.: 480-89467-1

SDG No.:

Lab Sample ID: CCVIS 480-273910/3 Calibration Date: 11/09/2015 12:57

Instrument ID: HP5973V Calib Start Date: 10/26/2015 19:36

GC Column: RXI-5Sil MS ID: 0.25(mm) Calib End Date: 10/26/2015 22:31

Lab File ID: V54272.D Conc. Units: ug/L

ANALYTE	CURVE TYPE	AVE RRF	RRF	MIN RRF	CALC AMOUNT	SPIKE AMOUNT	%D	MAX %D
Di-n-octyl phthalate	Lin1		1.681	0.0100	4620	4000	15.5	20.0
Benzo[b]fluoranthene	Lin1		1.085	0.7000	3800	4000	-5.0	20.0
Benzo[k]fluoranthene	Lin1		1.127	0.7000	3940	4000	-1.6	20.0
Benzo[a]pyrene	Lin1		1.075	0.7000	3940	4000	-1.6	20.0
Indeno[1,2,3-cd]pyrene	Lin1		1.317	0.5000	4180	4000	4.4	20.0
Dibenz(a,h)anthracene	Lin1		1.099	0.4000	4060	4000	1.5	20.0
Benzo[g,h,i]perylene	Ave	0.9852	1.070	0.5000	4350	4000	8.6	20.0
2-Fluorophenol (Surr)	Ave	1.168	1.109	0.0100	3800	4000	-5.0	25.0
Phenol-d5 (Surr)	Ave	1.436	1.273	0.0100	3550	4000	-11.3	25.0
Nitrobenzene-d5 (Surr)	Ave	0.3649	0.4003	0.0100	4390	4000	9.7	25.0
2-Fluorobiphenyl	Ave	1.359	1.394	0.0100	4100	4000	2.6	25.0
2,4,6-Tribromophenol (Surr)	Ave	0.1525	0.1762	0.0100	4620	4000	15.6	25.0
p-Terphenyl-d14 (Surr)	Ave	0.8914	0.9176	0.0100	4120	4000	2.9	25.0

FORM VII
GC/MS SEMI VOA CONTINUING CALIBRATION DATA

Lab Name: TestAmerica Buffalo | Job No.: 480-89467-1
SDG No.:
Lab Sample ID: CCVIS 480-273999/3 | Calibration Date: 11/10/2015 11:07
Instrument ID: HP5973V | Calib Start Date: 10/26/2015 19:36
GC Column: RXI-5Sil MS ID: 0.25(mm) | Calib End Date: 10/26/2015 22:31
Lab File ID: V60002.D | Conc. Units: ug/L

ANALYTE	CURVE TYPE	AVE RRF	RRF	MIN RRF	CALC AMOUNT	SPIKE AMOUNT	%D	MAX %D
1,4-Dioxane	Lin1		0.3817	0.0100	3260	4000	-18.5	50.0
N-Nitrosodimethylamine	Lin1		0.8980	0.0100	4860	4000	21.6	25.0
Pyridine	Ave	1.384	1.299	0.0100	3760	4000	-6.1	50.0
Benzaldehyde	Lin1		0.3338	0.0100	1950	4000	-51.3*	40.0
Phenol	Ave	1.482	1.321	0.8000	3570	4000	-10.9	20.0
Aniline	Ave	1.905	1.662	0.0100	3490	4000	-12.8	50.0
Bis(2-chloroethyl)ether	Ave	1.283	1.173	0.7000	3660	4000	-8.6	20.0
n-Decane	Ave	1.986	1.790	0.0100	3600	4000	-9.9	40.0
2-Chlorophenol	Lin1		1.268	0.8000	3870	4000	-3.2	20.0
1,3-Dichlorobenzene	Ave	1.454	1.451	0.0100	3990	4000	-0.2	20.0
1,4-Dichlorobenzene	Ave	1.499	1.537	0.0100	4100	4000	2.5	20.0
Benzyl alcohol	Ave	0.8436	0.7176	0.0100	3400	4000	-14.9	50.0
1,2-Dichlorobenzene	Ave	1.407	1.384	0.0100	3930	4000	-1.6	20.0
2-Methylphenol	Ave	1.154	1.040	0.7000	3600	4000	-9.9	20.0
bis (2-chloroisopropyl) ether	Ave	2.585	2.297	0.0100	3560	4000	-11.1	20.0
Indene	Ave	0.6110	0.6027		3950	4000	-1.4	
4-Methylphenol	Ave	1.192	1.051	0.6000	3530	4000	-11.8	20.0
N-Nitrosodi-n-propylamine	Ave	0.8006	0.7659	0.5000	3830	4000	-4.3	20.0
Acetophenone	Ave	1.671	1.726	0.0100	4130	4000	3.3	40.0
Hexachloroethane	Ave	0.5976	0.6638	0.3000	4440	4000	11.1	20.0
Nitrobenzene	Ave	0.3393	0.3615	0.2000	4260	4000	6.5	20.0
Isophorone	Ave	0.5778	0.5490	0.4000	3800	4000	-5.0	20.0
2-Nitrophenol	Lin1		0.1963	0.1000	3940	4000	-1.5	20.0
2,4-Dimethylphenol	Ave	0.3293	0.3467	0.2000	4210	4000	5.3	20.0
Benzoic acid	Lin1		0.2287	0.0100	3680	4000	-7.9	25.0
Bis(2-chloroethoxy)methane	Ave	0.3772	0.3423	0.3000	3630	4000	-9.3	20.0
2,4-Dichlorophenol	Ave	0.2857	0.2977	0.2000	4170	4000	4.2	20.0
1,2,4-Trichlorobenzene	Ave	0.3314	0.3483	0.0100	4200	4000	5.1	20.0
Naphthalene	Ave	1.021	0.9940	0.7000	3890	4000	-2.6	20.0
4-Chloroaniline	Ave	0.5492	0.4189	0.0100	3050	4000	-23.7*	20.0
2,6-Dichlorophenol	Ave	0.2874	0.2927	0.0100	4070	4000	1.8	50.0
Hexachlorobutadiene	Ave	0.1962	0.2387	0.0100	4870	4000	21.7*	20.0
Caprolactam	Lin1		0.1017	0.0100	3490	4000	-12.7	40.0
4-Chloro-3-methylphenol	Ave	0.2785	0.3055	0.2000	4390	4000	9.7	20.0
2-Methylnaphthalene	Ave	0.6860	0.6913	0.4000	4030	4000	0.8	20.0
1-Methylnaphthalene	Ave	0.6344	0.6333	0.0100	3990	4000	-0.2	40.0
Hexachlorocyclopentadiene	Lin1		0.4483	0.0500	4020	4000	0.5	20.0
1,2,4,5-Tetrachlorobenzene	Ave	0.5662	0.6285	0.0100	4440	4000	11.0	40.0
2,4,6-Trichlorophenol	Ave	0.3808	0.4192	0.2000	4400	4000	10.1	20.0
2,4,5-Trichlorophenol	Ave	0.4014	0.4134	0.2000	4120	4000	3.0	20.0

FORM VII
GC/MS SEMI VOA CONTINUING CALIBRATION DATA

Lab Name: TestAmerica Buffalo | Job No.: 480-89467-1
SDG No.:
Lab Sample ID: CCVIS 480-273999/3 | Calibration Date: 11/10/2015 11:07
Instrument ID: HP5973V | Calib Start Date: 10/26/2015 19:36
GC Column: RXI-5Sil MS ID: 0.25(mm) | Calib End Date: 10/26/2015 22:31
Lab File ID: V60002.D | Conc. Units: ug/L

ANALYTE	CURVE TYPE	AVE RRF	RRF	MIN RRF	CALC AMOUNT	SPIKE AMOUNT	%D	MAX %D
Biphenyl	Ave	1.513	1.510	0.0100	3990	4000	-0.2	40.0
2-Chloronaphthalene	Ave	1.163	1.169	0.8000	4020	4000	0.5	25.0
2-Nitroaniline	Lin1		0.3829	0.0100	4110	4000	2.7	20.0
Dimethyl phthalate	Ave	1.303	1.415	0.0100	4350	4000	8.6	20.0
1,3-Dinitrobenzene	Lin1		0.1447	0.0100	4190	4000	4.6	50.0
2,6-Dinitrotoluene	Lin1		0.3364	0.2000	4210	4000	5.2	20.0
Acenaphthylene	Ave	1.856	1.962	0.9000	4230	4000	5.7	20.0
3-Nitroaniline	Lin1		0.3417	0.0100	3690	4000	-7.8	20.0
2,4-Dinitrophenol	Lin1		0.1553	0.0100	5930	8000	-25.9*	20.0
Acenaphthene	Ave	1.189	1.233	0.0100	4150	4000	3.7	20.0
4-Nitrophenol	Lin1		0.2206	0.0100	10000	8000	25.2*	20.0
2,4-Dinitrotoluene	Lin1		0.4453	0.0100	4210	4000	5.4	20.0
Dibenzofuran	Ave	1.664	1.760	0.8000	4230	4000	5.8	20.0
2,3,4,6-Tetrachlorophenol	Lin1		0.3415	0.0100	3940	4000	-1.6	40.0
Hexadecane	Ave	0.6634	0.6173	0.0100	3720	4000	-7.0	40.0
Diethyl phthalate	Lin1		1.608	0.0100	3600	4000	-10.0	20.0
4-Chlorophenyl phenyl ether	Ave	0.6674	0.7207	0.4000	4320	4000	8.0	20.0
4-Nitroaniline	Lin1		0.3529	0.0100	3910	4000	-2.2	20.0
Fluorene	Ave	1.384	1.416	0.9000	4090	4000	2.3	20.0
4,6-Dinitro-2-methylphenol	Lin1		0.1394	0.0100	7470	8000	-6.7	20.0
Diphenylamine	Ave	0.6569	0.6506	0.0100	6770	6840	-1.0	50.0
N-Nitrosodiphenylamine	Ave	0.5617	0.5562	0.0100	7920	8000	-1.0	20.0
1,2-Diphenylhydrazine	Ave	0.7097	0.6934	0.0100	3910	4000	-2.3	25.0
trans-Azobenzene	Ave	0.7097	0.6934	0.0100	3910	4000	-2.3	40.0
4-Bromophenyl phenyl ether	Ave	0.2476	0.2771	0.1000	4480	4000	12.0	20.0
Atrazine	Lin1		0.4241	0.0100	4590	4000	14.7	25.0
Hexachlorobenzene	Ave	0.2903	0.3535	0.1000	4870	4000	21.8*	20.0
n-Octadecane	Ave	0.6565	0.6300	0.0100	3840	4000	-4.0	40.0
Pentachlorophenol	Lin1		0.1167	0.0500	5180	8000	-35.3*	20.0
Phenanthrene	Ave	1.090	1.104	0.7000	4050	4000	1.3	20.0
Anthracene	Ave	1.080	1.104	0.7000	4090	4000	2.2	20.0
Carbazole	Ave	1.029	1.028	0.0100	4000	4000	-0.1	20.0
Di-n-butyl phthalate	Lin1		1.528	0.0100	4640	4000	16.1	20.0
Fluoranthene	Ave	1.199	1.269	0.6000	4230	4000	5.8	20.0
Benzidine	Lin1		0.2291	0.0100	1700	4000	-57.6*	25.0
Pyrene	Ave	1.226	1.241	0.6000	4050	4000	1.2	20.0
Butyl benzyl phthalate	Lin1		0.6450	0.0100	4210	4000	5.3	20.0
Bis(2-ethylhexyl) phthalate	Lin1		0.9407	0.0100	4340	4000	8.6	20.0
3,3'-Dichlorobenzidine	Lin1		0.4451	0.0100	3950	4000	-1.2	20.0
Benzo[a]anthracene	Ave	1.123	1.124	0.8000	4000	4000	0.1	20.0
Chrysene	Ave	1.063	1.076	0.7000	4050	4000	1.3	20.0

FORM VII 8270D

FORM VII
GC/MS SEMI VOA CONTINUING CALIBRATION DATA

Lab Name: TestAmerica Buffalo Job No.: 480-89467-1

SDG No.:

Lab Sample ID: CCVIS 480-273999/3 Calibration Date: 11/10/2015 11:07

Instrument ID: HP5973V Calib Start Date: 10/26/2015 19:36

GC Column: RXI-5Sil MS ID: 0.25(mm) Calib End Date: 10/26/2015 22:31

Lab File ID: V60002.D Conc. Units: ug/L

ANALYTE	CURVE TYPE	AVE RRF	RRF	MIN RRF	CALC AMOUNT	SPIKE AMOUNT	%D	MAX %D
Di-n-octyl phthalate	Lin1		1.571	0.0100	4320	4000	8.1	20.0
Benzo[b]fluoranthene	Lin1		1.152	0.7000	4030	4000	0.8	20.0
Benzo[k]fluoranthene	Lin1		1.144	0.7000	4000	4000	-0.0	20.0
Benzo[a]pyrene	Lin1		1.100	0.7000	4030	4000	0.6	20.0
Indeno[1,2,3-cd]pyrene	Lin1		1.394	0.5000	4420	4000	10.5	20.0
Dibenz(a,h)anthracene	Lin1		1.148	0.4000	4240	4000	6.0	20.0
Benzo[g,h,i]perylene	Ave	0.9852	1.136	0.5000	4610	4000	15.3	20.0
2-Fluorophenol (Surr)	Ave	1.168	1.107	0.0100	3790	4000	-5.2	25.0
Phenol-d5 (Surr)	Ave	1.436	1.285	0.0100	3580	4000	-10.5	25.0
Nitrobenzene-d5 (Surr)	Ave	0.3649	0.4065	0.0100	4460	4000	11.4	25.0
2-Fluorobiphenyl	Ave	1.359	1.394	0.0100	4100	4000	2.6	25.0
2,4,6-Tribromophenol (Surr)	Ave	0.1525	0.1907	0.0100	5000	4000	25.0	25.0
p-Terphenyl-d14 (Surr)	Ave	0.8914	0.9110	0.0100	4090	4000	2.2	25.0

FORM VII
GC/MS SEMI VOA CONTINUING CALIBRATION DATA

Lab Name: TestAmerica Buffalo | Job No.: 480-89467-1
SDG No.:
Lab Sample ID: CCVIS 480-274392/3 | Calibration Date: 11/11/2015 12:49
Instrument ID: HP5973V | Calib Start Date: 10/26/2015 19:36
GC Column: RXI-5Sil MS ID: 0.25(mm) | Calib End Date: 10/26/2015 22:31
Lab File ID: V60044.D | Conc. Units: ug/L

ANALYTE	CURVE TYPE	AVE RRF	RRF	MIN RRF	CALC AMOUNT	SPIKE AMOUNT	%D	MAX %D
1,4-Dioxane	Lin1		0.4255	0.0100	3630	4000	-9.3	50.0
N-Nitrosodimethylamine	Lin1		0.9564	0.0100	5180	4000	29.5*	25.0
Pyridine	Ave	1.384	1.370	0.0100	3960	4000	-1.0	50.0
Benzaldehyde	Lin1		0.3419	0.0100	1990	4000	-50.2*	40.0
Phenol	Ave	1.482	1.356	0.8000	3660	4000	-8.5	20.0
Aniline	Ave	1.905	1.737	0.0100	3650	4000	-8.8	50.0
Bis(2-chloroethyl)ether	Ave	1.283	1.173	0.7000	3660	4000	-8.6	20.0
n-Decane	Ave	1.986	1.865	0.0100	3760	4000	-6.1	40.0
2-Chlorophenol	Lin1		1.279	0.8000	3910	4000	-2.3	20.0
1,3-Dichlorobenzene	Ave	1.454	1.480	0.0100	4070	4000	1.8	20.0
1,4-Dichlorobenzene	Ave	1.499	1.530	0.0100	4080	4000	2.0	20.0
Benzyl alcohol	Ave	0.8436	0.6859	0.0100	3250	4000	-18.7	50.0
1,2-Dichlorobenzene	Ave	1.407	1.374	0.0100	3910	4000	-2.4	20.0
2-Methylphenol	Ave	1.154	1.055	0.7000	3660	4000	-8.6	20.0
bis (2-chloroisopropyl) ether	Ave	2.585	2.363	0.0100	3660	4000	-8.6	20.0
Indene	Ave	0.6110	0.6182		4050	4000	1.2	
4-Methylphenol	Ave	1.192	1.075	0.6000	3610	4000	-9.8	20.0
N-Nitrosodi-n-propylamine	Ave	0.8006	0.7589	0.5000	3790	4000	-5.2	20.0
Acetophenone	Ave	1.671	1.675	0.0100	4010	4000	0.3	40.0
Hexachloroethane	Ave	0.5976	0.6568	0.3000	4400	4000	9.9	20.0
Nitrobenzene	Ave	0.3393	0.3666	0.2000	4320	4000	8.0	20.0
Isophorone	Ave	0.5778	0.5904	0.4000	4090	4000	2.2	20.0
2,4-Dimethylphenol	Ave	0.3293	0.3632	0.2000	4410	4000	10.3	20.0
2-Nitrophenol	Lin1		0.2034	0.1000	4080	4000	1.9	20.0
Benzoic acid	Lin1		0.2064	0.0100	3370	4000	-15.7	25.0
Bis(2-chloroethoxy)methane	Ave	0.3772	0.3584	0.3000	3800	4000	-5.0	20.0
2,4-Dichlorophenol	Ave	0.2857	0.2993	0.2000	4190	4000	4.7	20.0
1,2,4-Trichlorobenzene	Ave	0.3314	0.3473	0.0100	4190	4000	4.8	20.0
Naphthalene	Ave	1.021	0.997	0.7000	3910	4000	-2.4	20.0
4-Chloroaniline	Ave	0.5492	0.4315	0.0100	3140	4000	-21.4*	20.0
2,6-Dichlorophenol	Ave	0.2874	0.3015	0.0100	4200	4000	4.9	50.0
Hexachlorobutadiene	Ave	0.1962	0.2366	0.0100	4820	4000	20.6*	20.0
Caprolactam	Lin1		0.0987	0.0100	3390	4000	-15.2	40.0
4-Chloro-3-methylphenol	Ave	0.2785	0.3163	0.2000	4540	4000	13.6	20.0
2-Methylnaphthalene	Ave	0.6860	0.6907	0.4000	4030	4000	0.7	20.0
1-Methylnaphthalene	Ave	0.6344	0.6403	0.0100	4040	4000	0.9	40.0
Hexachlorocyclopentadiene	Lin1		0.4520	0.0500	4050	4000	1.3	20.0
1,2,4,5-Tetrachlorobenzene	Ave	0.5662	0.6340	0.0100	4480	4000	12.0	40.0
2,4,6-Trichlorophenol	Ave	0.3808	0.4027	0.2000	4230	4000	5.7	20.0
2,4,5-Trichlorophenol	Ave	0.4014	0.4294	0.2000	4280	4000	7.0	20.0

FORM VII
GC/MS SEMI VOA CONTINUING CALIBRATION DATA

Lab Name: TestAmerica Buffalo | Job No.: 480-89467-1
SDG No.:
Lab Sample ID: CCVIS 480-274392/3 | Calibration Date: 11/11/2015 12:49
Instrument ID: HP5973V | Calib Start Date: 10/26/2015 19:36
GC Column: RXI-5Sil MS ID: 0.25(mm) | Calib End Date: 10/26/2015 22:31
Lab File ID: V60044.D | Conc. Units: ug/L

ANALYTE	CURVE TYPE	AVE RRF	RRF	MIN RRF	CALC AMOUNT	SPIKE AMOUNT	%D	MAX %D
Biphenyl	Ave	1.513	1.534	0.0100	4050	4000	1.4	40.0
2-Chloronaphthalene	Ave	1.163	1.193	0.8000	4100	4000	2.6	25.0
2-Nitroaniline	Lin1		0.4119	0.0100	4410	4000	10.3	20.0
Dimethyl phthalate	Ave	1.303	1.420	0.0100	4360	4000	9.0	20.0
1,3-Dinitrobenzene	Lin1		0.1475	0.0100	4270	4000	6.6	50.0
2,6-Dinitrotoluene	Lin1		0.3458	0.2000	4320	4000	8.1	20.0
Acenaphthylene	Ave	1.856	1.984	0.9000	4280	4000	6.9	20.0
3-Nitroaniline	Lin1		0.3589	0.0100	3870	4000	-3.3	20.0
2,4-Dinitrophenol	Lin1		0.1792	0.0100	6780	8000	-15.2	20.0
Acenaphthene	Ave	1.189	1.255	0.0100	4220	4000	5.5	20.0
4-Nitrophenol	Lin1		0.2491	0.0100	11300	8000	41.2*	20.0
2,4-Dinitrotoluene	Lin1		0.4615	0.0100	4370	4000	9.1	20.0
Dibenzofuran	Ave	1.664	1.766	0.8000	4250	4000	6.1	20.0
2,3,4,6-Tetrachlorophenol	Lin1		0.3289	0.0100	3800	4000	-5.1	40.0
Hexadecane	Ave	0.6634	0.6606	0.0100	3980	4000	-0.4	40.0
Diethyl phthalate	Lin1		1.607	0.0100	3590	4000	-10.1	20.0
4-Chlorophenyl phenyl ether	Ave	0.6674	0.6975	0.4000	4180	4000	4.5	20.0
4-Nitroaniline	Lin1		0.3614	0.0100	4000	4000	0.0	20.0
Fluorene	Ave	1.384	1.410	0.9000	4070	4000	1.9	20.0
4,6-Dinitro-2-methylphenol	Lin1		0.1438	0.0100	7690	8000	-3.9	20.0
Diphenylamine	Ave	0.6569	0.6757	0.0100	7040	6840	2.9	50.0
N-Nitrosodiphenylamine	Ave	0.5617	0.5777	0.0100	8230	8000	2.9	20.0
1,2-Diphenylhydrazine	Ave	0.7097	0.7425	0.0100	4190	4000	4.6	25.0
trans-Azobenzene	Ave	0.7097	0.7425	0.0100	4190	4000	4.6	40.0
4-Bromophenyl phenyl ether	Ave	0.2476	0.2654	0.1000	4290	4000	7.2	20.0
Atrazine	Lin1		0.3986	0.0100	4310	4000	7.8	25.0
Hexachlorobenzene	Ave	0.2903	0.3398	0.1000	4680	4000	17.1	20.0
n-Octadecane	Ave	0.6565	0.6560	0.0100	4000	4000	-0.0	40.0
Pentachlorophenol	Lin1		0.1464	0.0500	6430	8000	-19.6	20.0
Phenanthrene	Ave	1.090	1.093	0.7000	4010	4000	0.3	20.0
Anthracene	Ave	1.080	1.099	0.7000	4070	4000	1.8	20.0
Carbazole	Ave	1.029	0.9916	0.0100	3860	4000	-3.6	20.0
Di-n-butyl phthalate	Lin1		1.548	0.0100	4710	4000	17.7	20.0
Fluoranthene	Ave	1.199	1.229	0.6000	4100	4000	2.5	20.0
Benzidine	Lin1		0.3088	0.0100	2190	4000	-45.2*	25.0
Pyrene	Ave	1.226	1.257	0.6000	4100	4000	2.5	20.0
Butyl benzyl phthalate	Lin1		0.6897	0.0100	4500	4000	12.5	20.0
Bis(2-ethylhexyl) phthalate	Lin1		0.9843	0.0100	4540	4000	13.5	20.0
3,3'-Dichlorobenzidine	Lin1		0.4607	0.0100	4090	4000	2.2	20.0
Benzo[a]anthracene	Ave	1.123	1.126	0.8000	4010	4000	0.3	20.0
Chrysene	Ave	1.063	1.031	0.7000	3880	4000	-3.0	20.0

FORM VII
GC/MS SEMI VOA CONTINUING CALIBRATION DATA

Lab Name: TestAmerica Buffalo Job No.: 480-89467-1

SDG No.:

Lab Sample ID: CCVIS 480-274392/3 Calibration Date: 11/11/2015 12:49

Instrument ID: HP5973V Calib Start Date: 10/26/2015 19:36

GC Column: RXI-5Sil MS ID: 0.25(mm) Calib End Date: 10/26/2015 22:31

Lab File ID: V60044.D Conc. Units: ug/L

ANALYTE	CURVE TYPE	AVE RRF	RRF	MIN RRF	CALC AMOUNT	SPIKE AMOUNT	%D	MAX %D
Di-n-octyl phthalate	Lin1		1.675	0.0100	4610	4000	15.1	20.0
Benzo[b]fluoranthene	Lin1		1.152	0.7000	4030	4000	0.8	20.0
Benzo[k]fluoranthene	Lin1		1.145	0.7000	4000	4000	0.0	20.0
Benzo[a]pyrene	Lin1		1.111	0.7000	4060	4000	1.6	20.0
Indeno[1,2,3-cd]pyrene	Lin1		1.388	0.5000	4400	4000	10.0	20.0
Dibenz(a,h)anthracene	Lin1		1.176	0.4000	4340	4000	8.5	20.0
Benzo[g,h,i]perylene	Ave	0.9852	1.147	0.5000	4660	4000	16.4	20.0
2-Fluorophenol (Surr)	Ave	1.168	1.134	0.0100	3880	4000	-2.9	25.0
Phenol-d5 (Surr)	Ave	1.436	1.321	0.0100	3680	4000	-8.0	25.0
Nitrobenzene-d5 (Surr)	Ave	0.3649	0.4256	0.0100	4660	4000	16.6	25.0
2-Fluorobiphenyl	Ave	1.359	1.431	0.0100	4210	4000	5.3	25.0
2,4,6-Tribromophenol (Surr)	Ave	0.1525	0.1842	0.0100	4830	4000	20.8	25.0
p-Terphenyl-d14 (Surr)	Ave	0.8914	0.9139	0.0100	4100	4000	2.5	25.0

FORM VII
GC/MS SEMI VOA CONTINUING CALIBRATION DATA

Lab Name: TestAmerica Buffalo | Job No.: 480-89467-1
SDG No.:
Lab Sample ID: CCVIS 480-273506/3 | Calibration Date: 11/05/2015 10:42
Instrument ID: HP5973X | Calib Start Date: 10/23/2015 08:33
GC Column: RXI-5Sil MS ID: 0.25(mm) | Calib End Date: 10/23/2015 10:48
Lab File ID: X009014095.D | Conc. Units: ug/L

ANALYTE	CURVE TYPE	AVE RRF	RRF	MIN RRF	CALC AMOUNT	SPIKE AMOUNT	%D	MAX %D
1,4-Dioxane	Ave	0.6195	0.6388	0.0100	51600	50000	3.1	50.0
N-Nitrosodimethylamine	Ave	0.7217	0.6399	0.0100	44300	50000	-11.3	25.0
Pyridine	Ave	1.298	1.164	0.0100	44800	50000	-10.4	50.0
Benzaldehyde	Lin1		0.4299	0.0100	40800	50000	-18.4	40.0
Phenol	Ave	1.767	1.692	0.8000	47900	50000	-4.3	20.0
Aniline	Ave	2.123	2.086	0.0100	49100	50000	-1.8	50.0
Bis(2-chloroethyl)ether	Ave	1.423	1.388	0.7000	48800	50000	-2.4	20.0
2-Chlorophenol	Ave	1.452	1.418	0.8000	48800	50000	-2.4	20.0
n-Decane	Ave	1.787	1.604	0.0100	44900	50000	-10.2	40.0
1,3-Dichlorobenzene	Ave	1.558	1.570	0.0100	50400	50000	0.8	20.0
1,4-Dichlorobenzene	Ave	1.593	1.595	0.0100	50100	50000	0.1	20.0
Benzyl alcohol	Ave	0.9222	0.9150	0.0100	49600	50000	-0.8	50.0
1,2-Dichlorobenzene	Ave	1.489	1.477	0.0100	49600	50000	-0.8	20.0
2-Methylphenol	Ave	1.271	1.242	0.7000	48800	50000	-2.3	20.0
bis (2-chloroisopropyl) ether	Ave	1.866	1.584	0.0100	42400	50000	-15.1	20.0
Indene	Ave	0.7740	0.8537		55200	50000	10.3	
4-Methylphenol	Ave	1.315	1.266	0.6000	48200	50000	-3.7	20.0
N-Nitrosodi-n-propylamine	Ave	0.9726	0.9126	0.5000	46900	50000	-6.2	20.0
Acetophenone	Ave	1.858	1.811	0.0100	48700	50000	-2.5	40.0
Hexachloroethane	Ave	0.6118	0.6065	0.3000	49600	50000	-0.9	20.0
Nitrobenzene	Ave	0.3772	0.3526	0.2000	46700	50000	-6.5	20.0
Isophorone	Ave	0.6697	0.6557	0.4000	49000	50000	-2.1	20.0
2-Nitrophenol	Lin1		0.1794	0.1000	44700	50000	-10.6	20.0
2,4-Dimethylphenol	Ave	0.3637	0.3607	0.2000	49600	50000	-0.8	20.0
Benzoic acid	Lin1		0.1991	0.0100	37600	50000	-24.8	25.0
Bis(2-chloroethoxy)methane	Ave	0.4257	0.4147	0.3000	48700	50000	-2.6	20.0
2,4-Dichlorophenol	Ave	0.3032	0.3081	0.2000	50800	50000	1.6	20.0
1,2,4-Trichlorobenzene	Ave	0.3317	0.3428	0.0100	51700	50000	3.4	20.0
Naphthalene	Ave	0.998	1.026	0.7000	51400	50000	2.9	20.0
4-Chloroaniline	Ave	0.4395	0.4512	0.0100	51300	50000	2.7	20.0
2,6-Dichlorophenol	Ave	0.2992	0.3052	0.0100	51000	50000	2.0	50.0
Hexachlorobutadiene	Ave	0.1875	0.2004	0.0100	53400	50000	6.9	20.0
Caprolactam	Lin1		0.1001	0.0100	43500	50000	-13.1	40.0
4-Chloro-3-methylphenol	Ave	0.3038	0.2996	0.2000	49300	50000	-1.4	20.0
2-Methylnaphthalene	Ave	0.6663	0.6719	0.4000	50400	50000	0.8	20.0
1-Methylnaphthalene	Ave	0.6059	0.6212	0.0100	51300	50000	2.5	40.0
Hexachlorocyclopentadiene	Lin1		0.4386	0.0500	50700	50000	1.4	20.0
1,2,4,5-Tetrachlorobenzene	Ave	0.5602	0.5874	0.0100	52400	50000	4.8	40.0
2,4,6-Trichlorophenol	Lin1		0.3941	0.2000	49500	50000	-1.1	20.0
2,4,5-Trichlorophenol	Lin1		0.4011	0.2000	48000	50000	-4.1	20.0

FORM VII
GC/MS SEMI VOA CONTINUING CALIBRATION DATA

Lab Name: TestAmerica Buffalo | Job No.: 480-89467-1
SDG No.:
Lab Sample ID: CCVIS 480-273506/3 | Calibration Date: 11/05/2015 10:42
Instrument ID: HP5973X | Calib Start Date: 10/23/2015 08:33
GC Column: RXI-5Sil MS ID: 0.25(mm) | Calib End Date: 10/23/2015 10:48
Lab File ID: X009014095.D | Conc. Units: ug/L

ANALYTE	CURVE TYPE	AVE RRF	RRF	MIN RRF	CALC AMOUNT	SPIKE AMOUNT	%D	MAX %D
Biphenyl	Ave	1.389	1.436	0.0100	51700	50000	3.4	40.0
2-Chloronaphthalene	Ave	1.151	1.192	0.8000	51800	50000	3.6	25.0
2-Nitroaniline	Lin1		0.3079	0.0100	43700	50000	-12.7	20.0
Dimethyl phthalate	Ave	1.278	1.276	0.0100	49900	50000	-0.2	20.0
1,3-Dinitrobenzene	Lin1		0.1022	0.0100	41600	50000	-16.9	50.0
2,6-Dinitrotoluene	Lin1		0.2785	0.2000	44000	50000	-12.1	20.0
Acenaphthylene	Ave	1.712	1.750	0.9000	51100	50000	2.2	20.0
3-Nitroaniline	Lin1		0.3120	0.0100	44500	50000	-10.9	20.0
2,4-Dinitrophenol	Lin1		0.1617	0.0100	86700	100000	-13.3	20.0
Acenaphthene	Ave	1.076	1.088	0.0100	50500	50000	1.1	20.0
4-Nitrophenol	Lin1		0.1593	0.0100	89700	100000	-10.3	20.0
2,4-Dinitrotoluene	Lin1		0.3620	0.0100	43100	50000	-13.8	20.0
Dibenzofuran	Ave	1.583	1.605	0.8000	50700	50000	1.3	20.0
2,3,4,6-Tetrachlorophenol	Lin1		0.3072	0.0100	48200	50000	-3.6	40.0
Diethyl phthalate	Ave	1.219	1.196	0.0100	49100	50000	-1.9	20.0
Hexadecane	Lin1		0.8266	0.0100	48000	50000	-3.9	40.0
4-Chlorophenyl phenyl ether	Ave	0.6446	0.6530	0.4000	50600	50000	1.3	20.0
4-Nitroaniline	Lin1		0.3196	0.0100	45000	50000	-9.9	20.0
Fluorene	Ave	1.265	1.286	0.9000	50800	50000	1.6	20.0
4,6-Dinitro-2-methylphenol	Lin1		0.1427	0.0100	89100	100000	-10.9	20.0
Diphenylamine	Ave	0.6469	0.6769	0.0100	89500	85500	4.6	50.0
N-Nitrosodiphenylamine	Ave	0.5531	0.5788	0.0100	105000	100000	4.6	20.0
1,2-Diphenylhydrazine	Ave	1.235	1.189	0.0100	48100	50000	-3.7	25.0
trans-Azobenzene	Ave	0.7660	0.7725	0.0100	50400	50000	0.8	40.0
4-Bromophenyl phenyl ether	Ave	0.2333	0.2525	0.1000	54100	50000	8.2	20.0
Hexachlorobenzene	Ave	0.2443	0.2639	0.1000	54000	50000	8.0	20.0
Atrazine	Lin1		0.3434	0.0100	47000	50000	-5.9	25.0
Pentachlorophenol	Lin1		0.1493	0.0500	108000	100000	7.7	20.0
n-Octadecane	Ave	0.5630	0.5156	0.0100	45800	50000	-8.4	40.0
Phenanthrene	Lin1		1.127	0.7000	53900	50000	7.7	20.0
Anthracene	Lin1		1.132	0.7000	53700	50000	7.5	20.0
Carbazole	Ave	1.047	1.041	0.0100	49700	50000	-0.6	20.0
Di-n-butyl phthalate	Ave	1.196	1.200	0.0100	50200	50000	0.3	20.0
Fluoranthene	Ave	1.171	1.206	0.6000	51500	50000	3.0	20.0
Benzidine	Lin1		0.3350	0.0100	39700	50000	-20.6	25.0
Pyrene	Ave	1.150	1.172	0.6000	51000	50000	1.9	20.0
Butyl benzyl phthalate	Lin1		0.5391	0.0100	48100	50000	-3.9	20.0
Bis(2-ethylhexyl) phthalate	Lin1		0.7597	0.0100	48500	50000	-3.1	20.0
3,3'-Dichlorobenzidine	Lin1		0.4448	0.0100	51000	50000	2.0	20.0
Benzo[a]anthracene	Ave	1.131	1.143	0.8000	50500	50000	1.0	20.0
Chrysene	Ave	1.074	1.090	0.7000	50700	50000	1.5	20.0

FORM VII 8270D

FORM VII
GC/MS SEMI VOA CONTINUING CALIBRATION DATA

Lab Name: TestAmerica Buffalo Job No.: 480-89467-1

SDG No.:

Lab Sample ID: CCVIS 480-273506/3 Calibration Date: 11/05/2015 10:42

Instrument ID: HP5973X Calib Start Date: 10/23/2015 08:33

GC Column: RXI-5Sil MS ID: 0.25(mm) Calib End Date: 10/23/2015 10:48

Lab File ID: X009014095.D Conc. Units: ug/L

ANALYTE	CURVE TYPE	AVE RRF	RRF	MIN RRF	CALC AMOUNT	SPIKE AMOUNT	%D	MAX %D
Di-n-octyl phthalate	Lin1		1.312	0.0100	50500	50000	1.0	20.0
Benzo[b]fluoranthene	Lin1		1.279	0.7000	54400	50000	8.9	20.0
Benzo[k]fluoranthene	Ave	1.215	1.183	0.7000	48700	50000	-2.6	20.0
Benzo[a]pyrene	Ave	1.122	1.151	0.7000	51300	50000	2.5	20.0
Dibenz(a,h)anthracene	Ave	1.082	1.135	0.4000	52500	50000	5.0	20.0
Indeno[1,2,3-cd]pyrene	Ave	1.269	1.337	0.5000	52700	50000	5.3	20.0
Benzo[g,h,i]perylene	Ave	1.054	1.126	0.5000	53400	50000	6.8	20.0
2-Fluorophenol (Surr)	Ave	1.450	1.430	0.0100	49300	50000	-1.4	25.0
Phenol-d5 (Surr)	Ave	1.696	1.664	0.0100	49100	50000	-1.9	25.0
Nitrobenzene-d5 (Surr)	Ave	0.3798	0.3391	0.0100	44600	50000	-10.7	25.0
2-Fluorobiphenyl	Ave	1.321	1.383	0.0100	52300	50000	4.6	25.0
2,4,6-Tribromophenol (Surr)	Lin1		0.1224	0.0100	50700	50000	1.4	25.0
p-Terphenyl-d14 (Surr)	Ave	0.8371	0.8520	0.0100	50900	50000	1.8	25.0

FORM I
GC/MS SEMI VOA ORGANICS ANALYSIS DATA SHEET

Lab Name: TestAmerica Buffalo
Job No.: 480-89467-1
SDG No.:
Client Sample ID:
Lab Sample ID: MB 480-273073/1-A
Matrix: Waste
Lab File ID: X009014105.D
Analysis Method: 8270D
Date Collected:
Extract. Method: 3580A
Date Extracted: 11/04/2015 13:45
Sample wt/vol: 0.10(g)
Date Analyzed: 11/05/2015 15:13
Con. Extract Vol.: 1(mL)
Dilution Factor: 1
Injection Volume: 1(uL)
Level: (low/med) Low
% Moisture:
GPC Cleanup:(Y/N) N
Analysis Batch No.: 273506
Units: ug/Kg

CAS NO.	COMPOUND NAME	RESULT	Q	RL	MDL
83-32-9	Acenaphthene	ND		3400	40
208-96-8	Acenaphthylene	ND		3400	28
120-12-7	Anthracene	ND		3400	86
56-55-3	Benzo[a]anthracene	ND		3400	58
50-32-8	Benzo[a]pyrene	ND		3400	82
205-99-2	Benzo[b]fluoranthene	ND		3400	66
191-24-2	Benzo[g,h,i]perylene	ND		3400	40
207-08-9	Benzo[k]fluoranthene	ND		3400	38
218-01-9	Chrysene	ND		3400	34
53-70-3	Dibenz(a,h)anthracene	ND		3400	40
206-44-0	Fluoranthene	ND		3400	48
86-73-7	Fluorene	ND		3400	78
193-39-5	Indeno[1,2,3-cd]pyrene	ND		3400	94
91-20-3	Naphthalene	ND		3400	56
85-01-8	Phenanthrene	ND		3400	70
129-00-0	Pyrene	ND		3400	22

CAS NO.	SURROGATE	%REC	Q	LIMITS
321-60-8	2-Fluorobiphenyl	98		37-120
4165-60-0	Nitrobenzene-d5 (Surr)	86		34-132
1718-51-0	p-Terphenyl-d14 (Surr)	99		65-153

FORM I
GC/MS SEMI VOA ORGANICS ANALYSIS DATA SHEET

Lab Name: TestAmerica Buffalo
Job No.: 480-89467-1
SDG No.:
Client Sample ID:
Lab Sample ID: MB 480-273586/1-A
Matrix: Water
Lab File ID: V54275.D
Analysis Method: 8270D
Date Collected:
Extract. Method: 3510C
Date Extracted: 11/06/2015 12:33
Sample wt/vol: 250(mL)
Date Analyzed: 11/09/2015 14:26
Con. Extract Vol.: 1(mL)
Dilution Factor: 1
Injection Volume: 2(uL)
Level: (low/med) Low
% Moisture:
GPC Cleanup:(Y/N) N
Analysis Batch No.: 273910
Units: ug/L

CAS NO.	COMPOUND NAME	RESULT	Q	RL	MDL
83-32-9	Acenaphthene	ND		5.0	0.41
208-96-8	Acenaphthylene	ND		5.0	0.38
120-12-7	Anthracene	ND		5.0	0.28
56-55-3	Benzo[a]anthracene	ND		5.0	0.36
50-32-8	Benzo[a]pyrene	ND		5.0	0.47
205-99-2	Benzo[b]fluoranthene	ND		5.0	0.34
191-24-2	Benzo[g,h,i]perylene	ND		5.0	0.35
207-08-9	Benzo[k]fluoranthene	ND		5.0	0.73
218-01-9	Chrysene	ND		5.0	0.33
53-70-3	Dibenz(a,h)anthracene	ND		5.0	0.42
206-44-0	Fluoranthene	ND		5.0	0.40
86-73-7	Fluorene	ND		5.0	0.36
193-39-5	Indeno[1,2,3-cd]pyrene	ND		5.0	0.47
91-20-3	Naphthalene	ND		5.0	0.76
85-01-8	Phenanthrene	ND		5.0	0.44
129-00-0	Pyrene	ND		5.0	0.34

CAS NO.	SURROGATE	%REC	Q	LIMITS
321-60-8	2-Fluorobiphenyl	86		48-120
4165-60-0	Nitrobenzene-d5 (Surr)	82		46-120
1718-51-0	p-Terphenyl-d14 (Surr)	99		67-150

FORM I
GC/MS SEMI VOA ORGANICS ANALYSIS DATA SHEET

Lab Name: TestAmerica Buffalo
Job No.: 480-89467-1
SDG No.:
Client Sample ID:
Lab Sample ID: LCS 480-273073/2-A
Matrix: Waste
Lab File ID: X009014106.D
Analysis Method: 8270D
Date Collected:
Extract. Method: 3580A
Date Extracted: 11/04/2015 13:45
Sample wt/vol: 0.10(g)
Date Analyzed: 11/05/2015 15:40
Con. Extract Vol.: 1(mL)
Dilution Factor: 1
Injection Volume: 1(uL)
Level: (low/med) Low
% Moisture:
GPC Cleanup:(Y/N) N
Analysis Batch No.: 273506
Units: ug/Kg

CAS NO.	COMPOUND NAME	RESULT	Q	RL	MDL
83-32-9	Acenaphthene	460000		3400	40
208-96-8	Acenaphthylene	453000		3400	28
120-12-7	Anthracene	517000		3400	86
56-55-3	Benzo[a]anthracene	502000		3400	58
50-32-8	Benzo[a]pyrene	497000		3400	82
205-99-2	Benzo[b]fluoranthene	488000		3400	66
191-24-2	Benzo[g,h,i]perylene	508000		3400	40
207-08-9	Benzo[k]fluoranthene	514000		3400	38
218-01-9	Chrysene	492000		3400	34
53-70-3	Dibenz(a,h)anthracene	506000		3400	40
206-44-0	Fluoranthene	503000		3400	48
86-73-7	Fluorene	483000		3400	78
193-39-5	Indeno[1,2,3-cd]pyrene	505000		3400	94
91-20-3	Naphthalene	438000		3400	56
85-01-8	Phenanthrene	518000		3400	70
129-00-0	Pyrene	516000		3400	22

CAS NO.	SURROGATE	%REC	Q	LIMITS
321-60-8	2-Fluorobiphenyl	93		37-120
4165-60-0	Nitrobenzene-d5 (Surr)	79		34-132
1718-51-0	p-Terphenyl-d14 (Surr)	102		65-153

FORM I
GC/MS SEMI VOA ORGANICS ANALYSIS DATA SHEET

Lab Name: TestAmerica Buffalo
Job No.: 480-89467-1
SDG No.:
Client Sample ID:
Lab Sample ID: LCS 480-273586/2-A
Matrix: Water
Lab File ID: V54276.D
Analysis Method: 8270D
Date Collected:
Extract. Method: 3510C
Date Extracted: 11/06/2015 12:33
Sample wt/vol: 250(mL)
Date Analyzed: 11/09/2015 14:56
Con. Extract Vol.: 1(mL)
Dilution Factor: 1
Injection Volume: 2(uL)
Level: (low/med) Low
% Moisture:
GPC Cleanup:(Y/N) N
Analysis Batch No.: 273910
Units: ug/L

CAS NO.	COMPOUND NAME	RESULT	Q	RL	MDL
83-32-9	Acenaphthene	14.5		5.0	0.41
208-96-8	Acenaphthylene	14.7		5.0	0.38
120-12-7	Anthracene	14.8		5.0	0.28
56-55-3	Benzo[a]anthracene	15.0		5.0	0.36
50-32-8	Benzo[a]pyrene	14.5		5.0	0.47
205-99-2	Benzo[b]fluoranthene	14.5		5.0	0.34
191-24-2	Benzo[g,h,i]perylene	17.1		5.0	0.35
207-08-9	Benzo[k]fluoranthene	14.4		5.0	0.73
218-01-9	Chrysene	15.0		5.0	0.33
53-70-3	Dibenz(a,h)anthracene	15.9		5.0	0.42
206-44-0	Fluoranthene	15.4		5.0	0.40
86-73-7	Fluorene	15.0		5.0	0.36
193-39-5	Indeno[1,2,3-cd]pyrene	15.8		5.0	0.47
91-20-3	Naphthalene	12.8		5.0	0.76
85-01-8	Phenanthrene	14.9		5.0	0.44
129-00-0	Pyrene	15.5		5.0	0.34

CAS NO.	SURROGATE	%REC	Q	LIMITS
321-60-8	2-Fluorobiphenyl	83		48-120
4165-60-0	Nitrobenzene-d5 (Surr)	83		46-120
1718-51-0	p-Terphenyl-d14 (Surr)	98		67-150

FORM I
GC/MS SEMI VOA ORGANICS ANALYSIS DATA SHEET

Lab Name: TestAmerica Buffalo
Job No.: 480-89467-1
SDG No.:
Client Sample ID:
Lab Sample ID: LCSD 480-273073/3-A
Matrix: Waste
Lab File ID: X009014107.D
Analysis Method: 8270D
Date Collected:
Extract. Method: 3580A
Date Extracted: 11/04/2015 13:45
Sample wt/vol: 0.10(g)
Date Analyzed: 11/05/2015 16:07
Con. Extract Vol.: 1(mL)
Dilution Factor: 1
Injection Volume: 1(uL)
Level: (low/med) Low
% Moisture:
GPC Cleanup:(Y/N) N
Analysis Batch No.: 273506
Units: ug/Kg

CAS NO.	COMPOUND NAME	RESULT	Q	RL	MDL
83-32-9	Acenaphthene	455000		3400	40
208-96-8	Acenaphthylene	452000		3400	28
120-12-7	Anthracene	492000		3400	86
56-55-3	Benzo[a]anthracene	469000		3400	58
50-32-8	Benzo[a]pyrene	471000		3400	82
205-99-2	Benzo[b]fluoranthene	466000		3400	66
191-24-2	Benzo[g,h,i]perylene	482000		3400	40
207-08-9	Benzo[k]fluoranthene	491000		3400	38
218-01-9	Chrysene	467000		3400	34
53-70-3	Dibenz(a,h)anthracene	481000		3400	40
206-44-0	Fluoranthene	486000		3400	48
86-73-7	Fluorene	469000		3400	78
193-39-5	Indeno[1,2,3-cd]pyrene	474000		3400	94
91-20-3	Naphthalene	428000		3400	56
85-01-8	Phenanthrene	495000		3400	70
129-00-0	Pyrene	478000		3400	22

CAS NO.	SURROGATE	%REC	Q	LIMITS
321-60-8	2-Fluorobiphenyl	93		37-120
4165-60-0	Nitrobenzene-d5 (Surr)	82		34-132
1718-51-0	p-Terphenyl-d14 (Surr)	96		65-153

GC/MS SEMI VOA ANALYSIS RUN LOG

Lab Name: TestAmerica Buffalo Job No.: 480-89467-1

SDG No.:

Instrument ID: HP5973V Start Date: 10/26/2015 19:07

Analysis Batch Number: 271208 End Date: 10/27/2015 06:08

LAB SAMPLE ID	CLIENT SAMPLE ID	DATE ANALYZED	DILUTION FACTOR	LAB FILE ID	COLUMN ID
DFTPP 480-271208/2		10/26/2015 19:07	1	V53779.D	RXI-5Sil MS 0.25(mm)
IC 480-271208/3		10/26/2015 19:36	1	V53780.D	RXI-5Sil MS 0.25(mm)
IC 480-271208/4		10/26/2015 20:05	1	V53781.D	RXI-5Sil MS 0.25(mm)
IC 480-271208/5		10/26/2015 20:35	1	V53782.D	RXI-5Sil MS 0.25(mm)
ICIS 480-271208/6		10/26/2015 21:04	1	V53783.D	RXI-5Sil MS 0.25(mm)
IC 480-271208/7		10/26/2015 21:33	1	V53784.D	RXI-5Sil MS 0.25(mm)
IC 480-271208/8		10/26/2015 22:02	1	V53785.D	RXI-5Sil MS 0.25(mm)
IC 480-271208/9		10/26/2015 22:31	1	V53786.D	RXI-5Sil MS 0.25(mm)
ICV 480-271208/10		10/26/2015 23:00	1		RXI-5Sil MS 0.25(mm)
IC 480-271208/11		10/26/2015 23:29	1		RXI-5Sil MS 0.25(mm)
IC 480-271208/12		10/26/2015 23:57	1		RXI-5Sil MS 0.25(mm)
IC 480-271208/13		10/27/2015 00:26	1		RXI-5Sil MS 0.25(mm)
IC 480-271208/14		10/27/2015 00:55	1		RXI-5Sil MS 0.25(mm)
IC 480-271208/15		10/27/2015 01:23	1		RXI-5Sil MS 0.25(mm)
IC 480-271208/16		10/27/2015 01:52	1		RXI-5Sil MS 0.25(mm)
IC 480-271208/17		10/27/2015 02:20	1		RXI-5Sil MS 0.25(mm)
ICV 480-271208/18		10/27/2015 02:49	1		RXI-5Sil MS 0.25(mm)
IC 480-271208/19		10/27/2015 03:17	1		RXI-5Sil MS 0.25(mm)
IC 480-271208/20		10/27/2015 03:45	1		RXI-5Sil MS 0.25(mm)
IC 480-271208/21		10/27/2015 04:14	1		RXI-5Sil MS 0.25(mm)
IC 480-271208/22		10/27/2015 04:42	1		RXI-5Sil MS 0.25(mm)
IC 480-271208/23		10/27/2015 05:11	1		RXI-5Sil MS 0.25(mm)
IC 480-271208/24		10/27/2015 05:39	1		RXI-5Sil MS 0.25(mm)
IC 480-271208/25		10/27/2015 06:08	1		RXI-5Sil MS 0.25(mm)

GC/MS SEMI VOA ANALYSIS RUN LOG

Lab Name: TestAmerica Buffalo Job No.: 480-89467-1

SDG No.:

Instrument ID: HP5973V Start Date: 11/09/2015 12:27

Analysis Batch Number: 273910 End Date: 11/09/2015 23:22

LAB SAMPLE ID	CLIENT SAMPLE ID	DATE ANALYZED	DILUTION FACTOR	LAB FILE ID	COLUMN ID
DFTPP 480-273910/2		11/09/2015 12:27	1	V54271.D	RXI-5Sil MS 0.25(mm)
CCVIS 480-273910/3		11/09/2015 12:57	1	V54272.D	RXI-5Sil MS 0.25(mm)
RL 480-273910/4		11/09/2015 13:26	1		RXI-5Sil MS 0.25(mm)
CCV 480-273910/5		11/09/2015 13:56	1		RXI-5Sil MS 0.25(mm)
MB 480-273586/1-A		11/09/2015 14:26	1	V54275.D	RXI-5Sil MS 0.25(mm)
LCS 480-273586/2-A		11/09/2015 14:56	1	V54276.D	RXI-5Sil MS 0.25(mm)
ZZZZZ		11/09/2015 15:25	1		RXI-5Sil MS 0.25(mm)
ZZZZZ		11/09/2015 15:55	1		RXI-5Sil MS 0.25(mm)
ZZZZZ		11/09/2015 20:53	5		RXI-5Sil MS 0.25(mm)
ZZZZZ		11/09/2015 21:23	1		RXI-5Sil MS 0.25(mm)
ZZZZZ		11/09/2015 21:53	1		RXI-5Sil MS 0.25(mm)
ZZZZZ		11/09/2015 22:23	10		RXI-5Sil MS 0.25(mm)
ZZZZZ		11/09/2015 22:52	5		RXI-5Sil MS 0.25(mm)
ZZZZZ		11/09/2015 23:22	1		RXI-5Sil MS 0.25(mm)

GC/MS SEMI VOA ANALYSIS RUN LOG

Lab Name: TestAmerica Buffalo Job No.: 480-89467-1

SDG No.:

Instrument ID: HP5973V Start Date: 11/10/2015 10:38

Analysis Batch Number: 273999 End Date: 11/10/2015 21:15

LAB SAMPLE ID	CLIENT SAMPLE ID	DATE ANALYZED	DILUTION FACTOR	LAB FILE ID	COLUMN ID
DFTPP 480-273999/2		11/10/2015 10:38	1	V60001.D	RXI-5Sil MS 0.25(mm)
CCVIS 480-273999/3		11/10/2015 11:07	1	V60002.D	RXI-5Sil MS 0.25(mm)
RL 480-273999/4		11/10/2015 11:36	1		RXI-5Sil MS 0.25(mm)
CCV 480-273999/5		11/10/2015 12:05	1		RXI-5Sil MS 0.25(mm)
ZZZZZ		11/10/2015 12:34	1		RXI-5Sil MS 0.25(mm)
ZZZZZ		11/10/2015 13:03	1		RXI-5Sil MS 0.25(mm)
ZZZZZ		11/10/2015 13:32	1		RXI-5Sil MS 0.25(mm)
ZZZZZ		11/10/2015 14:00	1		RXI-5Sil MS 0.25(mm)
ZZZZZ		11/10/2015 14:29	1		RXI-5Sil MS 0.25(mm)
ZZZZZ		11/10/2015 14:58	1		RXI-5Sil MS 0.25(mm)
ZZZZZ		11/10/2015 15:27	1		RXI-5Sil MS 0.25(mm)
ZZZZZ		11/10/2015 15:56	1		RXI-5Sil MS 0.25(mm)
ZZZZZ		11/10/2015 16:25	1		RXI-5Sil MS 0.25(mm)
ZZZZZ		11/10/2015 16:54	1		RXI-5Sil MS 0.25(mm)
480-89467-2	WW-02-030515-1557	11/10/2015 17:23	20	V60015.D	RXI-5Sil MS 0.25(mm)
480-89467-5	WW-01-030515-1352	11/10/2015 17:52	20	V60016.D	RXI-5Sil MS 0.25(mm)
480-89467-6	WW-01-042815-1600	11/10/2015 18:21	20	V60017.D	RXI-5Sil MS 0.25(mm)
480-89467-8	WW-01-050715-1600	11/10/2015 18:50	20	V60018.D	RXI-5Sil MS 0.25(mm)
480-89467-10	P-01-030515-1557	11/10/2015 19:19	20	V60019.D	RXI-5Sil MS 0.25(mm)
480-89467-13	P-01-051315-1530	11/10/2015 19:48	20	V60020.D	RXI-5Sil MS 0.25(mm)
480-89467-18	P-01-101514-0910	11/10/2015 20:17	20	V60021.D	RXI-5Sil MS 0.25(mm)
480-89467-19	P-01-100814-1120	11/10/2015 20:46	20	V60022.D	RXI-5Sil MS 0.25(mm)
480-89467-20	P-01-013015-0915	11/10/2015 21:15	20	V60023.D	RXI-5Sil MS 0.25(mm)

GC/MS SEMI VOA ANALYSIS RUN LOG

Lab Name: TestAmerica Buffalo Job No.: 480-89467-1

SDG No.:

Instrument ID: HP5973V Start Date: 11/11/2015 12:20

Analysis Batch Number: 274392 End Date: 11/11/2015 22:57

LAB SAMPLE ID	CLIENT SAMPLE ID	DATE ANALYZED	DILUTION FACTOR	LAB FILE ID	COLUMN ID
DFTPP 480-274392/2		11/11/2015 12:20	1	V60043.D	RXI-5Sil MS 0.25(mm)
CCVIS 480-274392/3		11/11/2015 12:49	1	V60044.D	RXI-5Sil MS 0.25(mm)
RL 480-274392/4		11/11/2015 13:18	1		RXI-5Sil MS 0.25(mm)
480-89467-6 DL	WW-01-042815-1600 DL	11/11/2015 13:47	100	V60046.D	RXI-5Sil MS 0.25(mm)
480-89467-8 DL	WW-01-050715-1600 DL	11/11/2015 14:16	100	V60047.D	RXI-5Sil MS 0.25(mm)
480-89467-20 DL	P-01-013015-0915 DL	11/11/2015 14:45	100	V60048.D	RXI-5Sil MS 0.25(mm)
CCV 480-274392/8		11/11/2015 15:14	1		RXI-5Sil MS 0.25(mm)
ZZZZZ		11/11/2015 15:43	1		RXI-5Sil MS 0.25(mm)
ZZZZZ		11/11/2015 16:12	1		RXI-5Sil MS 0.25(mm)
ZZZZZ		11/11/2015 16:41	1		RXI-5Sil MS 0.25(mm)
ZZZZZ		11/11/2015 17:10	1		RXI-5Sil MS 0.25(mm)
ZZZZZ		11/11/2015 17:39	1		RXI-5Sil MS 0.25(mm)
ZZZZZ		11/11/2015 18:08	1		RXI-5Sil MS 0.25(mm)
ZZZZZ		11/11/2015 18:37	1		RXI-5Sil MS 0.25(mm)
ZZZZZ		11/11/2015 19:06	1		RXI-5Sil MS 0.25(mm)
ZZZZZ		11/11/2015 19:35	1		RXI-5Sil MS 0.25(mm)
ZZZZZ		11/11/2015 20:04	1		RXI-5Sil MS 0.25(mm)
ZZZZZ		11/11/2015 20:33	1		RXI-5Sil MS 0.25(mm)
ZZZZZ		11/11/2015 21:02	1		RXI-5Sil MS 0.25(mm)
ZZZZZ		11/11/2015 21:31	1		RXI-5Sil MS 0.25(mm)
ZZZZZ		11/11/2015 22:00	1		RXI-5Sil MS 0.25(mm)
ZZZZZ		11/11/2015 22:28	1		RXI-5Sil MS 0.25(mm)
ZZZZZ		11/11/2015 22:57	1		RXI-5Sil MS 0.25(mm)

GC/MS SEMI VOA ANALYSIS RUN LOG

Lab Name: TestAmerica Buffalo Job No.: 480-89467-1

SDG No.:

Instrument ID: HP5973X Start Date: 10/23/2015 08:06

Analysis Batch Number: 270613 End Date: 10/23/2015 11:46

LAB SAMPLE ID	CLIENT SAMPLE ID	DATE ANALYZED	DILUTION FACTOR	LAB FILE ID	COLUMN ID
DFTPP 480-270613/2		10/23/2015 08:06	1	X009013898.D	RXI-5Sil MS 0.25(mm)
IC 480-270613/3		10/23/2015 08:33	1	X009013899.D	RXI-5Sil MS 0.25(mm)
IC 480-270613/4		10/23/2015 09:00	1	X009013900.D	RXI-5Sil MS 0.25(mm)
ICIS 480-270613/5		10/23/2015 09:27	1	X009013901.D	RXI-5Sil MS 0.25(mm)
IC 480-270613/6		10/23/2015 09:54	1	X009013902.D	RXI-5Sil MS 0.25(mm)
IC 480-270613/7		10/23/2015 10:21	1	X009013903.D	RXI-5Sil MS 0.25(mm)
IC 480-270613/8		10/23/2015 10:48	1	X009013904.D	RXI-5Sil MS 0.25(mm)
ICV 480-270613/9		10/23/2015 11:46	1		RXI-5Sil MS 0.25(mm)

GC/MS SEMI VOA ANALYSIS RUN LOG

Lab Name: TestAmerica Buffalo Job No.: 480-89467-1

SDG No.:

Instrument ID: HP5973X Start Date: 11/05/2015 10:14

Analysis Batch Number: 273506 End Date: 11/05/2015 20:33

LAB SAMPLE ID	CLIENT SAMPLE ID	DATE ANALYZED	DILUTION FACTOR	LAB FILE ID	COLUMN ID
DFTPP 480-273506/2		11/05/2015 10:14	1	X009014094.D	RXI-5Sil MS 0.25(mm)
CCVIS 480-273506/3		11/05/2015 10:42	1	X009014095.D	RXI-5Sil MS 0.25(mm)
RL 480-273506/11		11/05/2015 14:19	1		RXI-5Sil MS 0.25(mm)
ZZZZZ		11/05/2015 14:46	25		RXI-5Sil MS 0.25(mm)
MB 480-273073/1-A		11/05/2015 15:13	1	X009014105.D	RXI-5Sil MS 0.25(mm)
LCS 480-273073/2-A		11/05/2015 15:40	1	X009014106.D	RXI-5Sil MS 0.25(mm)
LCSD 480-273073/3-A		11/05/2015 16:07	1	X009014107.D	RXI-5Sil MS 0.25(mm)
480-89467-14	OS-01-031815-1530	11/05/2015 16:34	100	X009014108.D	RXI-5Sil MS 0.25(mm)
480-89467-15	OS-01-042415-1600	11/05/2015 17:01	10	X009014109.D	RXI-5Sil MS 0.25(mm)
480-89467-16	OS-01-042815-1600	11/05/2015 17:28	200	X009014110.D	RXI-5Sil MS 0.25(mm)
480-89467-17	OS-01-050715-1630	11/05/2015 17:55	100	X009014111.D	RXI-5Sil MS 0.25(mm)
480-89467-22	OS-01-101514-0910	11/05/2015 18:21	100	X009014112.D	RXI-5Sil MS 0.25(mm)
ZZZZZ		11/05/2015 18:47	1		RXI-5Sil MS 0.25(mm)
ZZZZZ		11/05/2015 19:14	1		RXI-5Sil MS 0.25(mm)
ZZZZZ		11/05/2015 19:40	1		RXI-5Sil MS 0.25(mm)
ZZZZZ		11/05/2015 20:06	1		RXI-5Sil MS 0.25(mm)
ZZZZZ		11/05/2015 20:33	1		RXI-5Sil MS 0.25(mm)

GC/MS SEMI VOA BATCH WORKSHEET

Lab Name: TestAmerica Buffalo Job No.: 480-89467-1

SDG No.:

Batch Number: 273073 Batch Start Date: 11/04/15 13:44 Batch Analyst: Myers, Carmela A

Batch Method: 3580A Batch End Date:

Lab Sample ID	Client Sample ID	Method Chain	Basis	InitialAmount	FinalAmount	O_8270/625LCS 00048	O_8270surr 00036		
MB 480-273073/1		3580A, 8270D		0.10 g	1 mL		1 mL		
LCS 480-273073/2		3580A, 8270D		0.10 g	1 mL	1 mL	1 mL		
LCSD 480-273073/3		3580A, 8270D		0.10 g	1 mL	1 mL	1 mL		
480-89467-A-14	OS-01-031815-153 0	3580A, 8270D	T	+0.13 g	1 mL		1 mL		
480-89467-A-15	OS-01-042415-160 0	3580A, 8270D	T	+0.11 g	1 mL		1 mL		
480-89467-A-16	OS-01-042815-160 0	3580A, 8270D	T	+0.12 g	1 mL		1 mL		
480-89467-A-17	OS-01-050715-163 0	3580A, 8270D	T	+0.12 g	1 mL		1 mL		
480-89467-A-22	OS-01-101514-091 0	3580A, 8270D	T	+0.13 g	1 mL		1 mL		

Batch Notes	
Balance ID	40029
Prep Solvent Volume Used	20 mL
Solvent Lot #	3061608
Solvent Name	MeCl2
Person who performed Spike	CM
Vial Lot Number	68828

Basis	Basis Description
T	Total/NA

The pound sign (#) in the amount added field denotes that the reagent was used undiluted. All calculations are performed using the stated concentration for this reagent.

GC/MS SEMI VOA BATCH WORKSHEET

Lab Name: TestAmerica Buffalo Job No.: 480-89467-1

SDG No.:

Batch Number: 273586 Batch Start Date: 11/06/15 12:32 Batch Analyst: Hartigan, Connor P

Batch Method: 3510C Batch End Date:

Lab Sample ID	Client Sample ID	Method Chain	Basis	ReceivedpH	GrossWeight	TareWeight	InitialAmount	FinalAmount	FirstAdjustpH
MB 480-273586/1		3510C, 8270D		7 SU			250 mL	1 mL	<2 SU
LCS 480-273586/2		3510C, 8270D		7 SU			250 mL	1 mL	<2 SU
480-89467-B-2	WW-02-030515-1557	3510C, 8270D	T	3 SU	439.2 g	181.2 g	258 mL	1 mL	<2 SU
480-89467-B-5	WW-01-030515-1352	3510C, 8270D	T	3 SU	440.6 g	181.7 g	258.9 mL	1 mL	<2 SU
480-89467-B-6	WW-01-042815-1600	3510C, 8270D	T	3 SU	440.1 g	180.4 g	259.7 mL	1 mL	<2 SU
480-89467-B-8	WW-01-050715-1600	3510C, 8270D	T	3 SU	438.6 g	179.5 g	259.1 mL	1 mL	<2 SU
480-89467-B-10	P-01-030515-1557	3510C, 8270D	T	3 SU	443.2 g	185.7 g	257.5 mL	1 mL	<2 SU
480-89467-B-13	P-01-051315-1530	3510C, 8270D	T	4 SU	422.3 g	179.9 g	242.4 mL	1 mL	<2 SU
480-89467-B-18	P-01-101514-0910	3510C, 8270D	T	7 SU	445.7 g	178.7 g	267 mL	1 mL	<2 SU
480-89467-B-19	P-01-100814-1120	3510C, 8270D	T	7 SU	436.7 g	179.2 g	257.5 mL	1 mL	<2 SU
480-89467-B-20	P-01-013015-0915	3510C, 8270D	T	3 SU	437.1 g	181.6 g	255.5 mL	1 mL	<2 SU

Lab Sample ID	Client Sample ID	Method Chain	Basis	SecondAdjustpH	O_8270LL LCS 00032	O_8270LLsurr 00034	AnalysisComment		
MB 480-273586/1		3510C, 8270D		>11 SU		1 mL			
LCS 480-273586/2		3510C, 8270D		>11 SU	1 mL	1 mL			
480-89467-B-2	WW-02-030515-1557	3510C, 8270D	T	>11 SU		1 mL	Density = 1.00 g/mL		
480-89467-B-5	WW-01-030515-1352	3510C, 8270D	T	>11 SU		1 mL	Density = 1.00 g/mL		
480-89467-B-6	WW-01-042815-1600	3510C, 8270D	T	>11 SU		1 mL	Density = 1.00 g/mL		
480-89467-B-8	WW-01-050715-1600	3510C, 8270D	T	>11 SU		1 mL	Density = 1.00 g/mL		
480-89467-B-10	P-01-030515-1557	3510C, 8270D	T	>11 SU		1 mL	Density = 1.00 g/mL		
480-89467-B-13	P-01-051315-1530	3510C, 8270D	T	>11 SU		1 mL	Density = 1.00 g/mL		
480-89467-B-18	P-01-101514-0910	3510C, 8270D	T	>11 SU		1 mL	Density = 1.00 g/mL		
480-89467-B-19	P-01-100814-1120	3510C, 8270D	T	>11 SU		1 mL	Density = 1.00 g/mL		

The pound sign (#) in the amount added field denotes that the reagent was used undiluted. All calculations are performed using the stated concentration for this reagent.

GC/MS SEMI VOA BATCH WORKSHEET

Lab Name: TestAmerica Buffalo Job No.: 480-89467-1

SDG No.:

Batch Number: 273586 Batch Start Date: 11/06/15 12:32 Batch Analyst: Hartigan, Connor P

Batch Method: 3510C Batch End Date:

Lab Sample ID	Client Sample ID	Method Chain	Basis	SecondAdjustpH	O_8270LL LCS 00032	O_8270LLsurr 00034	AnalysisComment		
480-89467-B-20	P-01-013015-0915	3510C, 8270D	T	>11 SU		1 mL	Density = 1.00 g/mL		

Batch Notes	
Acid used for pH adjustment	1:1 Sulfuric
Acid used for pH adjust Lot #	2810093
Balance ID	1129012602
Base used for pH adjustment	Sodium Hydroxide
Base used for pH adjust Lot #	3021633
Person's name who did the concentration	CH
Final Concentrator Volume	1 mL
Glass Wool ID	11414001
Na2SO4 Lot Number	2858178
pH Paper Lot Number	HC554612
Pipette ID	J24885D Tip Lot # E160593I
Prep Solvent Lot #	3076037
Prep Solvent Name	MeCl2
Prep Solvent Volume Used	120 mL
Person's name who did the prep	CH, IL
Person's name who witnessed reagent drop	CH
Person who performed Spike	CH
Person who witnessed spiking	CH
Sufficient volume for MS/MSD?	YES
Vial Lot Number	68828

Basis	Basis Description
T	Total/NA

The pound sign (#) in the amount added field denotes that the reagent was used undiluted. All calculations are performed using the stated concentration for this reagent.

Method 8021B

Volatile Organic Compounds (GC) by Method 8021B

FORM II
GC VOA SURROGATE RECOVERY

Lab Name: TestAmerica Buffalo Job No.: 480-89467-1

SDG No.:

Matrix: Water Level: Low

GC Column (1): RTX-VGC ID: 0.53(mm)

Client Sample ID	Lab Sample ID	TFT1 #	BFB1 #
WW-01-101514-1120	480-89467-1	139	122
WW-01-031915-1550	480-89467-3	138	125
WW-01-041415-1640	480-89467-4	104	96
WW-01-050615-1552	480-89467-7	125	116
WW-01-052015-1500	480-89467-9	109	91
P-01-031315-1531	480-89467-11	94	88
P-01-050615-1552	480-89467-12	135	123
P-01-040115-1600	480-89467-21	131	125
P-01-012215-0948	480-89467-23	124	114
WW-01-031315-1531	480-89467-24	146 X	126
	MB 480-273207/3	128	123
	LCS 480-273207/4	127	119
	LCSD 480-273207/5	133	125

	QC LIMITS
TFT = a,a,a-Trifluorotoluene	63-145
BFB = 4-Bromofluorobenzene	64-141

Column to be used to flag recovery values

FORM II 8021B

FORM IV
GC VOA METHOD BLANK SUMMARY

Lab Name: TestAmerica Buffalo Job No.: 480-89467-1

SDG No.:

Lab Sample ID: MB 480-273207/3

Matrix: Water Date Extracted: 11/05/2015 08:28

Lab File ID:(1) 3_69023.D Lab File ID:(2) 3_69023.D

Date Analyzed:(1) 11/05/2015 08:28 Date Analyzed:(2) 11/05/2015 08:28

Instrument ID:(1) HP5890-3 Instrument ID:(2) HP5890-3

GC Column:(1) RTX-VGC ID: 0.53(mm) GC Column:(2) RTX-VGC ID: 0.53(mm)

THIS METHOD BLANK APPLIES TO THE FOLLOWING SAMPLES:

CLIENT SAMPLE ID	LAB SAMPLE ID	DATE ANALYZED 1	DATE ANALYZED 2
	LCS 480-273207/4	11/05/2015 09:00	11/05/2015 09:00
	LCSD 480-273207/5	11/05/2015 09:31	11/05/2015 09:31
WW-01-101514-1120	480-89467-1	11/05/2015 11:33	11/05/2015 11:33
WW-01-031915-1550	480-89467-3	11/05/2015 12:05	11/05/2015 12:05
WW-01-041415-1640	480-89467-4	11/05/2015 12:38	11/05/2015 12:38
WW-01-050615-1552	480-89467-7	11/05/2015 13:10	11/05/2015 13:10
P-01-031315-1531	480-89467-11	11/05/2015 15:10	11/05/2015 15:10
P-01-050615-1552	480-89467-12	11/05/2015 16:14	11/05/2015 16:14
P-01-040115-1600	480-89467-21	11/05/2015 16:45	11/05/2015 16:45
WW-01-052015-1500	480-89467-9	11/05/2015 18:41	11/05/2015 18:41
P-01-012215-0948	480-89467-23	11/05/2015 19:13	11/05/2015 19:13
WW-01-031315-1531	480-89467-24	11/05/2015 19:44	11/05/2015 19:44

FORM X
IDENTIFICATION SUMMARY

Lab Name: TestAmerica Buffalo Job No.: 480-89467-1

SDG No.:

Client Sample ID: WW-01-101514-1120 Lab Sample ID: 480-89467-1

Instrument ID (1): HP5890-3 Instrument ID (2): HP5890-3

Date Analyzed (1): 11/05/2015 11:33 Date Analyzed (2): 11/05/2015 11:33

GC Column (1): RTX-VGC ID: 0.53(mm) GC Column (2): RTX-VGC ID: 0.53(mm)

ANALYTE	COL	PEAK	RT	RT WINDOW		CONCENTRATION		RPD
				FROM	TO	PEAK	MEAN	
Benzene	1		3.49	3.42	3.56	320		44.7
	2		4.17	4.10	4.24	200		
Toluene	1		5.17	5.09	5.23	11		143.4
	2		6.36	6.28	6.42	65		

FORM X
IDENTIFICATION SUMMARY

Lab Name: TestAmerica Buffalo Job No.: 480-89467-1

SDG No.:

Client Sample ID: WW-01-031915-1550 Lab Sample ID: 480-89467-3

Instrument ID (1): HP5890-3 Instrument ID (2): HP5890-3

Date Analyzed (1): 11/05/2015 12:05 Date Analyzed (2): 11/05/2015 12:05

GC Column (1): RTX-VGC ID: 0.53(mm) GC Column (2): RTX-VGC ID: 0.53(mm)

ANALYTE	COL	PEAK	RT	RT WINDOW		CONCENTRATION		RPD
				FROM	TO	PEAK	MEAN	
Benzene	1		3.50	3.42	3.56	1500		27.6
	2		4.17	4.10	4.24	1200		
Toluene	1		5.17	5.09	5.23	240		44.3
	2		6.35	6.28	6.42	380		
m,p-Xylene	1		7.86	7.76	7.90	75		193.7
	2		9.97	9.91	10.05	4700		

FORM X
IDENTIFICATION SUMMARY

Lab Name: TestAmerica Buffalo Job No.: 480-89467-1

SDG No.:

Client Sample ID: WW-01-041415-1640 Lab Sample ID: 480-89467-4

Instrument ID (1): HP5890-3 Instrument ID (2): HP5890-3

Date Analyzed (1): 11/05/2015 12:38 Date Analyzed (2): 11/05/2015 12:38

GC Column (1): RTX-VGC ID: 0.53(mm) GC Column (2): RTX-VGC ID: 0.53(mm)

ANALYTE	COL	PEAK	RT	RT WINDOW		CONCENTRATION		RPD
				FROM	TO	PEAK	MEAN	
Benzene	1		3.50	3.42	3.56	1800		10.8
	2		4.18	4.10	4.24	2000		
Toluene	1		5.17	5.09	5.23	890		15.0
	2		6.36	6.28	6.42	1000		
Ethylbenzene	1		7.50	7.42	7.56	450		30.5
	2		9.64	9.55	9.69	620		
m,p-Xylene	1		7.86	7.76	7.90	300		161.3
	2		9.97	9.91	10.05	2800		

FORM X
IDENTIFICATION SUMMARY

Lab Name: TestAmerica Buffalo Job No.: 480-89467-1

SDG No.:

Client Sample ID: WW-01-050615-1552 Lab Sample ID: 480-89467-7

Instrument ID (1): HP5890-3 Instrument ID (2): HP5890-3

Date Analyzed (1): 11/05/2015 13:10 Date Analyzed (2): 11/05/2015 13:10

GC Column (1): RTX-VGC ID: 0.53(mm) GC Column (2): RTX-VGC ID: 0.53(mm)

ANALYTE	COL	PEAK	RT	RT WINDOW		CONCENTRATION		RPD
				FROM	TO	PEAK	MEAN	
Benzene	1		3.50	3.42	3.56	1900		13.0
	2		4.18	4.10	4.24	2100		
Toluene	1		5.17	5.09	5.23	1400		12.9
	2		6.36	6.28	6.42	1600		
Ethylbenzene	1		7.50	7.42	7.56	890		27.4
	2		9.64	9.55	9.69	1200		
m,p-Xylene	1		7.84	7.76	7.90	2200		77.0
	2		9.98	9.91	10.05	5000		

FORM X
IDENTIFICATION SUMMARY

Lab Name: TestAmerica Buffalo Job No.: 480-89467-1

SDG No.:

Client Sample ID: WW-01-052015-1500 Lab Sample ID: 480-89467-9

Instrument ID (1): HP5890-3 Instrument ID (2): HP5890-3

Date Analyzed (1): 11/05/2015 18:41 Date Analyzed (2): 11/05/2015 18:41

GC Column (1): RTX-VGC ID: 0.53(mm) GC Column (2): RTX-VGC ID: 0.53(mm)

ANALYTE	COL	PEAK	RT	RT WINDOW		CONCENTRATION		RPD
				FROM	TO	PEAK	MEAN	
Benzene	1		3.50	3.44	3.58	670		12.1
	2		4.18	4.11	4.25	590		
Toluene	1		5.17	5.10	5.24	87		40.4
	2		6.35	6.29	6.43	130		
m,p-Xylene	1		7.85	7.78	7.92	55		186.3
	2		9.96	9.94	10.08	1600		
o-Xylene	1		8.87	8.79	8.93	160		32.2
	2		11.04	10.92	11.06	220		

FORM X
IDENTIFICATION SUMMARY

Lab Name: TestAmerica Buffalo Job No.: 480-89467-1

SDG No.:

Client Sample ID: P-01-031315-1531 Lab Sample ID: 480-89467-11

Instrument ID (1): HP5890-3 Instrument ID (2): HP5890-3

Date Analyzed (1): 11/05/2015 15:10 Date Analyzed (2): 11/05/2015 15:10

GC Column (1): RTX-VGC ID: 0.53(mm) GC Column (2): RTX-VGC ID: 0.53(mm)

ANALYTE	COL	PEAK	RT	RT WINDOW		CONCENTRATION		RPD
				FROM	TO	PEAK	MEAN	
Benzene	1		3.51	3.44	3.58	2400		111.7
	2		4.18	4.11	4.25	670		
Toluene	1		5.18	5.10	5.24	260		25.5
	2		6.36	6.29	6.43	200		
m,p-Xylene	1		7.91	7.78	7.92	110		175.4
	2		9.99	9.94	10.08	1700		

FORM X
IDENTIFICATION SUMMARY

Lab Name: TestAmerica Buffalo Job No.: 480-89467-1

SDG No.:

Client Sample ID: P-01-050615-1552 Lab Sample ID: 480-89467-12

Instrument ID (1): HP5890-3 Instrument ID (2): HP5890-3

Date Analyzed (1): 11/05/2015 16:14 Date Analyzed (2): 11/05/2015 16:14

GC Column (1): RTX-VGC ID: 0.53(mm) GC Column (2): RTX-VGC ID: 0.53(mm)

ANALYTE	COL	PEAK	RT	RT WINDOW		CONCENTRATION		RPD
				FROM	TO	PEAK	MEAN	
Benzene	1		3.51	3.44	3.58	1400		45.9
	2		4.19	4.11	4.25	880		
Toluene	1		5.19	5.10	5.24	120		40.3
	2		6.37	6.29	6.43	190		
m,p-Xylene	1		7.89	7.78	7.92	50		194.7
	2		9.98	9.94	10.08	3800		

FORM X
IDENTIFICATION SUMMARY

Lab Name: TestAmerica Buffalo Job No.: 480-89467-1

SDG No.:

Client Sample ID: P-01-040115-1600 Lab Sample ID: 480-89467-21

Instrument ID (1): HP5890-3 Instrument ID (2): HP5890-3

Date Analyzed (1): 11/05/2015 16:45 Date Analyzed (2): 11/05/2015 16:45

GC Column (1): RTX-VGC ID: 0.53(mm) GC Column (2): RTX-VGC ID: 0.53(mm)

ANALYTE	COL	PEAK	RT	RT WINDOW		CONCENTRATION		RPD
				FROM	TO	PEAK	MEAN	
Benzene	1		3.51	3.44	3.58	14000		50.5
	2		4.18	4.11	4.25	8100		
Toluene	1		5.18	5.10	5.24	5500		11.0
	2		6.36	6.29	6.43	6100		
Ethylbenzene	1		7.51	7.44	7.58	3700		7.1
	2		9.64	9.57	9.71	3900		
m,p-Xylene	1		7.85	7.78	7.92	7700		47.1
	2		9.99	9.94	10.08	12000		

FORM X
IDENTIFICATION SUMMARY

Lab Name: TestAmerica Buffalo Job No.: 480-89467-1

SDG No.:

Client Sample ID: P-01-012215-0948 Lab Sample ID: 480-89467-23

Instrument ID (1): HP5890-3 Instrument ID (2): HP5890-3

Date Analyzed (1): 11/05/2015 19:13 Date Analyzed (2): 11/05/2015 19:13

GC Column (1): RTX-VGC ID: 0.53(mm) GC Column (2): RTX-VGC ID: 0.53(mm)

ANALYTE	COL	PEAK	RT	RT WINDOW		CONCENTRATION		RPD
				FROM	TO	PEAK	MEAN	
Benzene	1		3.51	3.44	3.58	160		156.5
	2		4.18	4.11	4.25	19		
Toluene	1		5.17	5.10	5.24	7.9		19.2
	2		6.35	6.29	6.43	9.6		
m,p-Xylene	1		7.85	7.78	7.92	6.8		168.7
	2		9.96	9.94	10.08	80		

FORM X
IDENTIFICATION SUMMARY

Lab Name: TestAmerica Buffalo Job No.: 480-89467-1

SDG No.:

Client Sample ID: WW-01-031315-1531 Lab Sample ID: 480-89467-24

Instrument ID (1): HP5890-3 Instrument ID (2): HP5890-3

Date Analyzed (1): 11/05/2015 19:44 Date Analyzed (2): 11/05/2015 19:44

GC Column (1): RTX-VGC ID: 0.53(mm) GC Column (2): RTX-VGC ID: 0.53(mm)

ANALYTE	COL	PEAK	RT	RT WINDOW		CONCENTRATION		RPD
				FROM	TO	PEAK	MEAN	
Benzene	1		3.51	3.44	3.58	12		47.1
	2		4.18	4.11	4.25	7.7		
Toluene	1		5.18	5.10	5.24	1.4		43.2
	2		6.35	6.29	6.43	2.1		
o-Xylene	1		8.87	8.79	8.93	3.7		26.9
	2		11.04	10.92	11.06	4.8		

FORM X
IDENTIFICATION SUMMARY

Lab Name: TestAmerica Buffalo Job No.: 480-89467-1

SDG No.:

Client Sample ID: Lab Sample ID: LCS 480-273207/4

Instrument ID (1): HP5890-3 Instrument ID (2): HP5890-3

Date Analyzed (1): 11/05/2015 09:00 Date Analyzed (2): 11/05/2015 09:00

GC Column (1): RTX-VGC ID: 0.53(mm) GC Column (2): RTX-VGC ID: 0.53(mm)

ANALYTE	COL	PEAK	RT	RT WINDOW		CONCENTRATION		RPD
				FROM	TO	PEAK	MEAN	
Benzene	1		3.49	3.42	3.56	3.62		9.0
	2		4.17	4.10	4.24	3.96		
Toluene	1		5.17	5.09	5.23	3.52		10.3
	2		6.35	6.28	6.42	3.90		
Ethylbenzene	1		7.51	7.42	7.56	3.58		11.0
	2		9.64	9.55	9.69	3.99		
m,p-Xylene	1		7.86	7.76	7.90	7.32		8.8
	2		10.00	9.91	10.05	8.00		
o-Xylene	1		8.87	8.77	8.91	3.53		11.2
	2		10.99	10.90	11.04	3.95		

FORM X
IDENTIFICATION SUMMARY

Lab Name: TestAmerica Buffalo Job No.: 480-89467-1

SDG No.:

Client Sample ID: Lab Sample ID: LCSD 480-273207/5

Instrument ID (1): HP5890-3 Instrument ID (2): HP5890-3

Date Analyzed (1): 11/05/2015 09:31 Date Analyzed (2): 11/05/2015 09:31

GC Column (1): RTX-VGC ID: 0.53(mm) GC Column (2): RTX-VGC ID: 0.53(mm)

ANALYTE	COL	PEAK	RT	RT WINDOW		CONCENTRATION		RPD
				FROM	TO	PEAK	MEAN	
Benzene	1		3.49	3.42	3.56	3.63		10.0
	2		4.17	4.10	4.24	4.02		
Toluene	1		5.16	5.09	5.23	3.49		12.2
	2		6.35	6.28	6.42	3.95		
Ethylbenzene	1		7.51	7.42	7.56	3.63		9.9
	2		9.63	9.55	9.69	4.01		
m,p-Xylene	1		7.85	7.76	7.90	7.43		7.8
	2		10.00	9.91	10.05	8.04		
o-Xylene	1		8.86	8.77	8.91	3.56		11.6
	2		10.98	10.90	11.04	4.00		

FORM I
GC VOA ORGANICS ANALYSIS DATA SHEET

Lab Name: TestAmerica Buffalo | Job No.: 480-89467-1
SDG No.:
Client Sample ID: WW-01-101514-1120 | Lab Sample ID: 480-89467-1
Matrix: Water | Lab File ID: 3_69027.D
Analysis Method: 8021B | Date Collected: 10/15/2014 11:20
Sample wt/vol: 44(mL) | Date Analyzed: 11/05/2015 11:33
Soil Aliquot Vol: | Dilution Factor: 200
Soil Extract Vol.: | GC Column: RTX-VGC ID: 0.53(mm)
% Moisture: | Level: (low/med) Low
Analysis Batch No.: 273207 | Units: ug/L

CAS NO.	COMPOUND NAME	RESULT	Q	RL	MDL
71-43-2	Benzene	320	H	40	4.7
108-88-3	Toluene	11	J H	40	7.1
100-41-4	Ethylbenzene	ND	H	40	5.7
179601-23-1	m,p-Xylene	ND	H	80	11
95-47-6	o-Xylene	ND	H	40	5.4
1330-20-7	Xylenes, Total	ND	H	120	11

CAS NO.	SURROGATE	%REC	Q	LIMITS
98-08-8	a,a,a-Trifluorotoluene	139		63-145
460-00-4	4-Bromofluorobenzene	122		64-141

FORM I
GC VOA ORGANICS ANALYSIS DATA SHEET

Lab Name: TestAmerica Buffalo
Job No.: 480-89467-1
SDG No.:
Client Sample ID: WW-01-031915-1550
Lab Sample ID: 480-89467-3
Matrix: Water
Lab File ID: 3_69028.D
Analysis Method: 8021B
Date Collected: 03/19/2015 15:50
Sample wt/vol: 44(mL)
Date Analyzed: 11/05/2015 12:05
Soil Aliquot Vol:
Dilution Factor: 800
Soil Extract Vol.:
GC Column: RTX-VGC ID: 0.53(mm)
% Moisture:
Level: (low/med) Low
Analysis Batch No.: 273207
Units: ug/L

CAS NO.	COMPOUND NAME	RESULT	Q	RL	MDL
71-43-2	Benzene	1500	H	160	19
108-88-3	Toluene	240	H	160	28
100-41-4	Ethylbenzene	ND	H	160	23
179601-23-1	m,p-Xylene	75	J H	320	43
95-47-6	o-Xylene	ND	H	160	22
1330-20-7	Xylenes, Total	75	J H	480	43

CAS NO.	SURROGATE	%REC	Q	LIMITS
98-08-8	a,a,a-Trifluorotoluene	138		63-145
460-00-4	4-Bromofluorobenzene	125		64-141

FORM I
GC VOA ORGANICS ANALYSIS DATA SHEET

Lab Name: TestAmerica Buffalo
Job No.: 480-89467-1
SDG No.:
Client Sample ID: WW-01-041415-1640
Lab Sample ID: 480-89467-4
Matrix: Water
Lab File ID: 3_69029.D
Analysis Method: 8021B
Date Collected: 04/14/2015 16:40
Sample wt/vol: 44(mL)
Date Analyzed: 11/05/2015 12:38
Soil Aliquot Vol:
Dilution Factor: 200
Soil Extract Vol.:
GC Column: RTX-VGC ID: 0.53(mm)
% Moisture:
Level: (low/med) Low
Analysis Batch No.: 273207
Units: ug/L

CAS NO.	COMPOUND NAME	RESULT	Q	RL	MDL
71-43-2	Benzene	1800	H	40	4.7
108-88-3	Toluene	890	H	40	7.1
100-41-4	Ethylbenzene	450	H	40	5.7
179601-23-1	m,p-Xylene	300	H	80	11
95-47-6	o-Xylene	ND	H	40	5.4
1330-20-7	Xylenes, Total	300	H	120	11

CAS NO.	SURROGATE	%REC	Q	LIMITS
98-08-8	a,a,a-Trifluorotoluene	104		63-145
460-00-4	4-Bromofluorobenzene	96		64-141

FORM I
GC VOA ORGANICS ANALYSIS DATA SHEET

Lab Name: TestAmerica Buffalo
Job No.: 480-89467-1
SDG No.:
Client Sample ID: WW-01-050615-1552
Lab Sample ID: 480-89467-7
Matrix: Water
Lab File ID: 3_69030.D
Analysis Method: 8021B
Date Collected: 05/06/2015 15:52
Sample wt/vol: 44(mL)
Date Analyzed: 11/05/2015 13:10
Soil Aliquot Vol:
Dilution Factor: 200
Soil Extract Vol.:
GC Column: RTX-VGC ID: 0.53(mm)
% Moisture:
Level: (low/med) Low
Analysis Batch No.: 273207
Units: ug/L

CAS NO.	COMPOUND NAME	RESULT	Q	RL	MDL
71-43-2	Benzene	1900	H	40	4.7
108-88-3	Toluene	1400	H	40	7.1
100-41-4	Ethylbenzene	890	H	40	5.7
179601-23-1	m,p-Xylene	2200	H	80	11
95-47-6	o-Xylene	ND	H	40	5.4
1330-20-7	Xylenes, Total	2200	H	120	11

CAS NO.	SURROGATE	%REC	Q	LIMITS
98-08-8	a,a,a-Trifluorotoluene	125		63-145
460-00-4	4-Bromofluorobenzene	116		64-141

FORM I
GC VOA ORGANICS ANALYSIS DATA SHEET

Lab Name: TestAmerica Buffalo
Job No.: 480-89467-1
SDG No.:
Client Sample ID: WW-01-052015-1500
Lab Sample ID: 480-89467-9
Matrix: Water
Lab File ID: 3_69039.D
Analysis Method: 8021B
Date Collected: 05/20/2015 15:00
Sample wt/vol: 44(mL)
Date Analyzed: 11/05/2015 18:41
Soil Aliquot Vol:
Dilution Factor: 200
Soil Extract Vol.:
GC Column: RTX-VGC ID: 0.53(mm)
% Moisture:
Level: (low/med) Low
Analysis Batch No.: 273207
Units: ug/L

CAS NO.	COMPOUND NAME	RESULT	Q	RL	MDL
71-43-2	Benzene	670	H	40	4.7
108-88-3	Toluene	87	H	40	7.1
100-41-4	Ethylbenzene	ND	H	40	5.7
179601-23-1	m,p-Xylene	55	J H	80	11
95-47-6	o-Xylene	160	H	40	5.4
1330-20-7	Xylenes, Total	220	H	120	11

CAS NO.	SURROGATE	%REC	Q	LIMITS
98-08-8	a,a,a-Trifluorotoluene	109		63-145
460-00-4	4-Bromofluorobenzene	91		64-141

FORM I
GC VOA ORGANICS ANALYSIS DATA SHEET

Lab Name: TestAmerica Buffalo
Job No.: 480-89467-1
SDG No.:
Client Sample ID: P-01-031315-1531
Lab Sample ID: 480-89467-11
Matrix: Water
Lab File ID: 3_69033.D
Analysis Method: 8021B
Date Collected: 03/13/2015 15:31
Sample wt/vol: 44(mL)
Date Analyzed: 11/05/2015 15:10
Soil Aliquot Vol:
Dilution Factor: 2000
Soil Extract Vol.:
GC Column: RTX-VGC ID: 0.53(mm)
% Moisture:
Level: (low/med) Low
Analysis Batch No.: 273207
Units: ug/L

CAS NO.	COMPOUND NAME	RESULT	Q	RL	MDL
71-43-2	Benzene	2400	H	400	47
108-88-3	Toluene	260	J H	400	71
100-41-4	Ethylbenzene	ND	H	400	57
179601-23-1	m,p-Xylene	110	J H	800	110
95-47-6	o-Xylene	ND	H	400	54
1330-20-7	Xylenes, Total	110	J H	1200	110

CAS NO.	SURROGATE	%REC	Q	LIMITS
98-08-8	a,a,a-Trifluorotoluene	94		63-145
460-00-4	4-Bromofluorobenzene	88		64-141

FORM I
GC VOA ORGANICS ANALYSIS DATA SHEET

Lab Name: TestAmerica Buffalo
Job No.: 480-89467-1
SDG No.:
Client Sample ID: P-01-050615-1552
Lab Sample ID: 480-89467-12
Matrix: Water
Lab File ID: 3_69035.D
Analysis Method: 8021B
Date Collected: 05/06/2015 15:52
Sample wt/vol: 44(mL)
Date Analyzed: 11/05/2015 16:14
Soil Aliquot Vol:
Dilution Factor: 400
Soil Extract Vol.:
GC Column: RTX-VGC ID: 0.53(mm)
% Moisture:
Level: (low/med) Low
Analysis Batch No.: 273207
Units: ug/L

CAS NO.	COMPOUND NAME	RESULT	Q	RL	MDL
71-43-2	Benzene	1400	H	80	9.3
108-88-3	Toluene	120	H	80	14
100-41-4	Ethylbenzene	ND	H	80	11
179601-23-1	m,p-Xylene	50	J H	160	22
95-47-6	o-Xylene	ND	H	80	11
1330-20-7	Xylenes, Total	50	J H	240	22

CAS NO.	SURROGATE	%REC	Q	LIMITS
98-08-8	a,a,a-Trifluorotoluene	135		63-145
460-00-4	4-Bromofluorobenzene	123		64-141

FORM I
GC VOA ORGANICS ANALYSIS DATA SHEET

Lab Name: TestAmerica Buffalo
Job No.: 480-89467-1
SDG No.:
Client Sample ID: P-01-040115-1600
Lab Sample ID: 480-89467-21
Matrix: Water
Lab File ID: 3_69036.D
Analysis Method: 8021B
Date Collected: 04/01/2015 16:00
Sample wt/vol: 44(mL)
Date Analyzed: 11/05/2015 16:45
Soil Aliquot Vol:
Dilution Factor: 800
Soil Extract Vol.:
GC Column: RTX-VGC ID: 0.53(mm)
% Moisture:
Level: (low/med) Low
Analysis Batch No.: 273207
Units: ug/L

CAS NO.	COMPOUND NAME	RESULT	Q	RL	MDL
71-43-2	Benzene	14000	H	160	19
108-88-3	Toluene	5500	H	160	28
100-41-4	Ethylbenzene	3700	H	160	23
179601-23-1	m,p-Xylene	7700	H	320	43
95-47-6	o-Xylene	ND	H	160	22
1330-20-7	Xylenes, Total	7700	H	480	43

CAS NO.	SURROGATE	%REC	Q	LIMITS
98-08-8	a,a,a-Trifluorotoluene	131		63-145
460-00-4	4-Bromofluorobenzene	125		64-141

FORM I
GC VOA ORGANICS ANALYSIS DATA SHEET

Lab Name: TestAmerica Buffalo
Job No.: 480-89467-1
SDG No.:
Client Sample ID: P-01-012215-0948
Lab Sample ID: 480-89467-23
Matrix: Water
Lab File ID: 3_69040.D
Analysis Method: 8021B
Date Collected: 01/22/2015 09:48
Sample wt/vol: 44(mL)
Date Analyzed: 11/05/2015 19:13
Soil Aliquot Vol:
Dilution Factor: 800
Soil Extract Vol.:
GC Column: RTX-VGC ID: 0.53(mm)
% Moisture:
Level: (low/med) Low
Analysis Batch No.: 273207
Units: ug/L

CAS NO.	COMPOUND NAME	RESULT	Q	RL	MDL
71-43-2	Benzene	160	H	3.6	0.42
108-88-3	Toluene	7.9	H	3.6	0.65
100-41-4	Ethylbenzene	ND	H	3.6	0.52
179601-23-1	m,p-Xylene	6.8	J H	7.3	0.98
95-47-6	o-Xylene	ND	H	3.6	0.49
1330-20-7	Xylenes, Total	6.8	J H	11	0.98

CAS NO.	SURROGATE	%REC	Q	LIMITS
98-08-8	a,a,a-Trifluorotoluene	124		63-145
460-00-4	4-Bromofluorobenzene	114		64-141

FORM I
GC VOA ORGANICS ANALYSIS DATA SHEET

Lab Name: TestAmerica Buffalo
Job No.: 480-89467-1
SDG No.:
Client Sample ID: WW-01-031315-1531
Lab Sample ID: 480-89467-24
Matrix: Water
Lab File ID: 3_69041.D
Analysis Method: 8021B
Date Collected: 03/13/2015 15:31
Sample wt/vol: 44(mL)
Date Analyzed: 11/05/2015 19:44
Soil Aliquot Vol:
Dilution Factor: 200
Soil Extract Vol.:
GC Column: RTX-VGC ID: 0.53(mm)
% Moisture:
Level: (low/med) Low
Analysis Batch No.: 273207
Units: ug/L

CAS NO.	COMPOUND NAME	RESULT	Q	RL	MDL
71-43-2	Benzene	12	H	0.91	0.11
108-88-3	Toluene	1.4	H	0.91	0.16
100-41-4	Ethylbenzene	ND	H	0.91	0.13
179601-23-1	m,p-Xylene	ND	H	1.8	0.25
95-47-6	o-Xylene	3.7	H	0.91	0.12
1330-20-7	Xylenes, Total	3.7	H	2.7	0.25

CAS NO.	SURROGATE	%REC	Q	LIMITS
98-08-8	a,a,a-Trifluorotoluene	146	X	63-145
460-00-4	4-Bromofluorobenzene	126		64-141

FORM VI
GC VOA BY EXTERNAL STANDARD - INITIAL CALIBRATION DATA
RETENTION TIME SUMMARY

Lab Name: TestAmerica Buffalo Job No.: 480-89467-1 Analy Batch No.: 262944

SDG No.:

Instrument ID: HP5890-3 GC Column: RTX-VGC ID: 0.53(mm) Heated Purge: (Y/N) N

Calibration Start Date: 09/10/2015 17:44 Calibration End Date: 09/10/2015 19:52 Calibration ID: 24884

Calibration Files:

LEVEL:	LAB SAMPLE ID:	LAB FILE ID:
Level 1	STD1 480-262944/2	3_67061.D
Level 2	STD2 480-262944/3	3_67062.D
Level 3	STD3 480-262944/4	3_67063.D
Level 4	STD4 480-262944/5	3_67064.D
Level 5	STD5 480-262944/6	3_67065.D

ANALYTE	LVL 1	LVL 2	LVL 3	LVL 4	LVL 5						RT WINDOW	AVG RT
Methyl tert-butyl ether	2.237	2.233	2.233	2.233	2.227						2.163 - 2.303	2.233
Benzene	3.487	3.483	3.480	3.480	3.477						3.410 - 3.550	3.481
Toluene	5.163	5.153	5.147	5.143	5.140						5.077 - 5.217	5.149
Ethylbenzene	7.527	7.507	7.497	7.490	7.487						7.427 - 7.567	7.502
m,p-Xylene	7.867	7.843	7.833	7.827	7.823						7.763 - 7.903	7.839
o-Xylene	8.877	8.860	8.847	8.840	8.837						8.777 - 8.917	8.852
Isopropylbenzene	9.710	9.707	9.697	9.690	9.690						9.627 - 9.767	9.699
n-Propylbenzene	10.827	10.817	10.803	10.797	10.793						10.733 - 10.873	10.807
1,3,5-Trimethylbenzene	11.497	11.427	11.413	11.407	11.403						11.343 - 11.483	11.429
tert-Butylbenzene	12.230	12.223	12.213	12.207	12.207						12.143 - 12.283	12.216
1,2,4-Trimethylbenzene	12.473	12.453	12.440	12.430	12.430						12.370 - 12.510	12.445
sec-Butylbenzene	12.743	12.730	12.720	12.713	12.713						12.650 - 12.790	12.724
4-Isopropyltoluene	13.237	13.223	13.210	13.203	13.203						13.140 - 13.280	13.215
n-Butylbenzene	14.463	14.417	14.400	14.390	14.390						14.330 - 14.470	14.412
Naphthalene	17.693	17.630	17.617	17.610	17.610						17.547 - 17.687	17.632
a,a,a-Trifluorotoluene	4.407	4.407	4.407	4.407	4.400						4.337 - 4.477	4.406
4-Bromofluorobenzene	10.333	10.337	10.330	10.323	10.320						10.260 - 10.400	10.329

FORM VI
GC VOA BY EXTERNAL STANDARD - INITIAL CALIBRATION DATA
CURVE EVALUATION

Lab Name: TestAmerica Buffalo Job No.: 480-89467-1 Analy Batch No.: 262944

SDG No.:

Instrument ID: HP5890-3 GC Column: RTX-VGC ID: 0.53(mm) Heated Purge: (Y/N) N

Calibration Start Date: 09/10/2015 17:44 Calibration End Date: 09/10/2015 19:52 Calibration ID: 24884

Calibration Files:

LEVEL:	LAB SAMPLE ID:	LAB FILE ID:
Level 1	STD1 480-262944/2	3_67061.D
Level 2	STD2 480-262944/3	3_67062.D
Level 3	STD3 480-262944/4	3_67063.D
Level 4	STD4 480-262944/5	3_67064.D
Level 5	STD5 480-262944/6	3_67065.D

ANALYTE	CF				CURVE TYPE	COEFFICIENT			#	MIN CF	%RSD	#	MAX %RSD	R^2 OR COD	#	MIN R^2 OR COD
	LVL 1 LVL 5	LVL 2	LVL 3	LVL 4		B	M1	M2								
Methyl tert-butyl ether	9345.0 8589.9	8410.5	7998.3	9278.6	Ave		8724.47333				6.6		20.0			
Benzene	27970 24788	25301	23646	25828	Ave		25506.6367				6.3		20.0			
Toluene	25695 23254	23836	22086	24219	Ave		23817.9633				5.6		20.0			
Ethylbenzene	20930 20832	20977	19896	21701	Ave		20867.1733				3.1		20.0			
m,p-Xylene	25063 23879	24665	22651	24684	Ave		24188.3350				4.0		20.0			
o-Xylene	22140 20870	20895	19823	21931	Ave		21131.9733				4.4		20.0			
Isopropylbenzene	20310 17961	17654	16934	18780	Ave		18327.7500				7.0		20.0			
n-Propylbenzene	27335 19469	18889	18394	20228	Lin1	1353.79539	19414.4223							0.9990		0.9900
1,3,5-Trimethylbenzene	62055 29340	31399	27729	30570	Lin1	6536.88940	29224.1117							0.9990		0.9900
tert-Butylbenzene	17070 15910	15709	14808	16599	Ave		16019.0667				5.4		20.0			
1,2,4-Trimethylbenzene	24770 22543	22598	21152	23465	Ave		22905.5733				5.8		20.0			
sec-Butylbenzene	19115 17352	17849	16259	18165	Ave		17748.0067				5.9		20.0			
4-Isopropyltoluene	15970 16977	17051	15910	17762	Ave		16733.9100				4.7		20.0			
n-Butylbenzene	14175 18050	17555	16599	18724	Ave		17020.5633				10.4		20.0			
Naphthalene	6555.0 12330	10700	11359	13328	Lin1	-1462.3680	12419.1405							0.9970		0.9900

Note: The m1 coefficient is the same as Ave CF for an Ave curve type.

FORM VI
GC VOA BY EXTERNAL STANDARD - INITIAL CALIBRATION DATA
CURVE EVALUATION

Lab Name: TestAmerica Buffalo Job No.: 480-89467-1 Analy Batch No.: 262944

SDG No.:

Instrument ID: HP5890-3 GC Column: RTX-VGC ID: 0.53(mm) Heated Purge: (Y/N) N

Calibration Start Date: 09/10/2015 17:44 Calibration End Date: 09/10/2015 19:52 Calibration ID: 24884

ANALYTE	CF				CURVE TYPE	COEFFICIENT			#	MIN CF	%RSD	#	MAX %RSD	R^2 OR COD	#	MIN R^2 OR COD
	LVL 1 LVL 5	LVL 2	LVL 3	LVL 4		B	M1	M2								
a,a,a-Trifluorotoluene	11509 11600	11458	9234.6	8494.4	Ave		10459.2889				14.2		20.0			
4-Bromofluorobenzene	27078 27488	27004	22350	20256	Ave		24835.2444				13.3		20.0			

Note: The m1 coefficient is the same as Ave CF for an Ave curve type.

FORM VI
GC VOA BY EXTERNAL STANDARD - INITIAL CALIBRATION DATA
RESPONSE AND CONCENTRATION

Lab Name: TestAmerica Buffalo Job No.: 480-89467-1 Analy Batch No.: 262944

SDG No.:

Instrument ID: HP5890-3 GC Column: RTX-VGC ID: 0.53(mm) Heated Purge: (Y/N) N

Calibration Start Date: 09/10/2015 17:44 Calibration End Date: 09/10/2015 19:52 Calibration ID: 24884

Calibration Files:

LEVEL:	LAB SAMPLE ID:	LAB FILE ID:
Level 1	STD1 480-262944/2	3_67061.D
Level 2	STD2 480-262944/3	3_67062.D
Level 3	STD3 480-262944/4	3_67063.D
Level 4	STD4 480-262944/5	3_67064.D
Level 5	STD5 480-262944/6	3_67065.D

ANALYTE	CURVE TYPE	RESPONSE					CONCENTRATION (UG/L)				
		LVL 1	LVL 2	LVL 3	LVL 4	LVL 5	LVL 1	LVL 2	LVL 3	LVL 4	LVL 5
Methyl tert-butyl ether	Ave	1869	33642	159966	278359	515396	0.200	4.00	20.0	30.0	60.0
Benzene	Ave	5594	101202	472923	774848	1487296	0.200	4.00	20.0	30.0	60.0
Toluene	Ave	5139	95344	441714	726583	1395221	0.200	4.00	20.0	30.0	60.0
Ethylbenzene	Ave	4186	83908	397918	651025	1249928	0.200	4.00	20.0	30.0	60.0
m,p-Xylene	Ave	10025	197317	906044	1481038	2865538	0.400	8.00	40.0	60.0	120
o-Xylene	Ave	4428	83581	396466	657942	1252195	0.200	4.00	20.0	30.0	60.0
Isopropylbenzene	Ave	4062	70615	338686	563397	1077648	0.200	4.00	20.0	30.0	60.0
n-Propylbenzene	Lin1	5467	75555	367876	606844	1168154	0.200	4.00	20.0	30.0	60.0
1,3,5-Trimethylbenzene	Lin1	12411	125596	554580	917104	1760387	0.200	4.00	20.0	30.0	60.0
tert-Butylbenzene	Ave	3414	62834	296153	497979	954593	0.200	4.00	20.0	30.0	60.0
1,2,4-Trimethylbenzene	Ave	4954	90393	423036	703955	1352559	0.200	4.00	20.0	30.0	60.0
sec-Butylbenzene	Ave	3823	71395	325179	544959	1041122	0.200	4.00	20.0	30.0	60.0
4-Isopropyltoluene	Ave	3194	68203	318204	532862	1018592	0.200	4.00	20.0	30.0	60.0
n-Butylbenzene	Ave	2835	70221	331979	561709	1082999	0.200	4.00	20.0	30.0	60.0
Naphthalene	Lin1	1311	42798	227182	399843	739820	0.200	4.00	20.0	30.0	60.0
a,a,a-Trifluorotoluene	Ave	207162	206249	166223	152900	208802	18.0	18.0	18.0	18.0	18.0
4-Bromofluorobenzene	Ave	487406	486066	402305	364605	494790	18.0	18.0	18.0	18.0	18.0

Curve Type Legend:

Ave = Average
Lin1 = Linear 1/conc

FORM VI
GC VOA BY EXTERNAL STANDARD - INITIAL CALIBRATION DATA
RETENTION TIME SUMMARY

Lab Name: TestAmerica Buffalo Job No.: 480-89467-1 Analy Batch No.: 262944

SDG No.:

Instrument ID: HP5890-3 GC Column: RTX-VGC ID: 0.53(mm) Heated Purge: (Y/N) N

Calibration Start Date: 09/10/2015 17:44 Calibration End Date: 09/10/2015 19:52 Calibration ID: 24885

Calibration Files:

LEVEL:	LAB SAMPLE ID:	LAB FILE ID:
Level 1	STD1 480-262944/2	3_67061.D
Level 2	STD2 480-262944/3	3_67062.D
Level 3	STD3 480-262944/4	3_67063.D
Level 4	STD4 480-262944/5	3_67064.D
Level 5	STD5 480-262944/6	3_67065.D

ANALYTE	LVL 1	LVL 2	LVL 3	LVL 4	LVL 5						RT WINDOW	AVG RT
Methyl tert-butyl ether	2.717	2.713	2.717	2.713	2.710						2.647 - 2.787	2.714
Benzene	4.163	4.163	4.163	4.163	4.160						4.093 - 4.233	4.162
Toluene	6.350	6.350	6.347	6.343	6.340						6.277 - 6.417	6.346
Ethylbenzene	9.640	9.643	9.633	9.630	9.627						9.563 - 9.703	9.635
m,p-Xylene	10.000	10.000	9.997	9.990	9.987						9.927 - 10.067	9.995
o-Xylene	10.983	10.987	10.980	10.973	10.973						10.910 - 11.050	10.979
Isopropylbenzene	12.033	12.037	12.027	12.023	12.020						11.957 - 12.097	12.028
n-Propylbenzene	13.203	13.203	13.193	13.190	13.190						13.123 - 13.263	13.196
1,3,5-Trimethylbenzene	13.777	13.783	13.773	13.767	13.770						13.703 - 13.843	13.774
tert-Butylbenzene	14.627	14.630	14.620	14.613	14.613						14.550 - 14.690	14.621
1,2,4-Trimethylbenzene	14.833	14.833	14.827	14.817	14.820						14.757 - 14.897	14.826
sec-Butylbenzene	15.327	15.323	15.317	15.310	15.313						15.247 - 15.387	15.318
4-Isopropyltoluene	15.757	15.760	15.753	15.747	15.747						15.683 - 15.823	15.753
n-Butylbenzene	16.480	16.480	16.473	16.473	16.473						16.403 - 16.543	16.476
Naphthalene	18.423	18.420	18.417	18.413	18.417						18.347 - 18.487	18.418
a,a,a-Trifluorotoluene	5.050	5.050	5.050	5.047	5.043						4.980 - 5.120	5.048
4-Bromofluorobenzene	12.463	12.467	12.460	12.453	12.453						12.390 - 12.530	12.459

FORM VI
GC VOA BY EXTERNAL STANDARD - INITIAL CALIBRATION DATA
CURVE EVALUATION

Lab Name: TestAmerica Buffalo Job No.: 480-89467-1 Analy Batch No.: 262944

SDG No.:

Instrument ID: HP5890-3 GC Column: RTX-VGC ID: 0.53(mm) Heated Purge: (Y/N) N

Calibration Start Date: 09/10/2015 17:44 Calibration End Date: 09/10/2015 19:52 Calibration ID: 24885

Calibration Files:

LEVEL:	LAB SAMPLE ID:	LAB FILE ID:
Level 1	STD1 480-262944/2	3_67061.D
Level 2	STD2 480-262944/3	3_67062.D
Level 3	STD3 480-262944/4	3_67063.D
Level 4	STD4 480-262944/5	3_67064.D
Level 5	STD5 480-262944/6	3_67065.D

ANALYTE	CF				CURVE TYPE	COEFFICIENT			#	MIN CF	%RSD	#	MAX %RSD	R^2 OR COD	#	MIN R^2 OR COD
	LVL 1 LVL 5	LVL 2	LVL 3	LVL 4		B	M1	M2								
Methyl tert-butyl ether	11210 10549	10442	9805.5	11277	Ave		10656.4633				5.7		20.0			
Benzene	37085 31964	31844	29124	32479	Ave		32499.2067				8.9		20.0			
Toluene	36380 29651	29823	27192	30177	Ave		30644.6867				11.1		20.0			
Ethylbenzene	30785 26663	26740	24749	27447	Ave		27276.8867				8.1		20.0			
m,p-Xylene	35965 31222	30254	28032	31778	Ave		31450.1883				9.2		20.0			
o-Xylene	29525 26454	26393	24641	27408	Ave		26884.2167				6.6		20.0			
Isopropylbenzene	24640 22665	22289	21041	23500	Ave		22827.1533				5.9		20.0			
n-Propylbenzene	31560 24769	24590	22854	25505	Lin1	1191.83055	24580.1913							0.9990		0.9900
1,3,5-Trimethylbenzene	47315 37603	36997	34302	38517	Lin1	1642.96310	37188.8195							0.9980		0.9900
tert-Butylbenzene	21460 20035	19857	18602	20828	Ave		20156.2433				5.4		20.0			
1,2,4-Trimethylbenzene	31840 29257	28450	26850	30096	Ave		29298.6800				6.3		20.0			
sec-Butylbenzene	22415 21599	21176	19871	22430	Ave		21498.1333				4.9		20.0			
4-Isopropyltoluene	22965 21493	20952	19830	22281	Ave		21504.1300				5.6		20.0			
n-Butylbenzene	25850 22874	22013	20892	23572	Ave		23040.1633				8.1		20.0			
Naphthalene	12320 15826	14540	14635	16970	Lin1	-982.87647	15909.8545							0.9970		0.9900

Note: The m1 coefficient is the same as Ave CF for an Ave curve type.

FORM VI
GC VOA BY EXTERNAL STANDARD - INITIAL CALIBRATION DATA
CURVE EVALUATION

Lab Name: TestAmerica Buffalo Job No.: 480-89467-1 Analy Batch No.: 262944

SDG No.:

Instrument ID: HP5890-3 GC Column: RTX-VGC ID: 0.53(mm) Heated Purge: (Y/N) N

Calibration Start Date: 09/10/2015 17:44 Calibration End Date: 09/10/2015 19:52 Calibration ID: 24885

ANALYTE	CF				CURVE TYPE	COEFFICIENT			#	MIN CF	%RSD	#	MAX %RSD	R^2 OR COD	#	MIN R^2 OR COD
	LVL 1 LVL 5	LVL 2	LVL 3	LVL 4		B	M1	M2								
a,a,a-Trifluorotoluene	14343 14745	14224	11617	10794	Ave		13144.7333				13.7		20.0			
4-Bromofluorobenzene	34168 35251	34046	28138	26032	Ave		31527.0111				13.2		20.0			

Note: The m1 coefficient is the same as Ave CF for an Ave curve type.

FORM VI
GC VOA BY EXTERNAL STANDARD - INITIAL CALIBRATION DATA
RESPONSE AND CONCENTRATION

Lab Name: TestAmerica Buffalo Job No.: 480-89467-1 Analy Batch No.: 262944

SDG No.:

Instrument ID: HP5890-3 GC Column: RTX-VGC ID: 0.53(mm) Heated Purge: (Y/N) N

Calibration Start Date: 09/10/2015 17:44 Calibration End Date: 09/10/2015 19:52 Calibration ID: 24885

Calibration Files:

LEVEL:	LAB SAMPLE ID:	LAB FILE ID:
Level 1	STD1 480-262944/2	3_67061.D
Level 2	STD2 480-262944/3	3_67062.D
Level 3	STD3 480-262944/4	3_67063.D
Level 4	STD4 480-262944/5	3_67064.D
Level 5	STD5 480-262944/6	3_67065.D

ANALYTE	CURVE TYPE	RESPONSE					CONCENTRATION (UG/L)				
		LVL 1	LVL 2	LVL 3	LVL 4	LVL 5	LVL 1	LVL 2	LVL 3	LVL 4	LVL 5
Methyl tert-butyl ether	Ave	2242	41766	196109	338302	632918	0.200	4.00	20.0	30.0	60.0
Benzene	Ave	7417	127374	582485	974380	1917837	0.200	4.00	20.0	30.0	60.0
Toluene	Ave	7276	119291	543844	905318	1779073	0.200	4.00	20.0	30.0	60.0
Ethylbenzene	Ave	6157	106959	494986	823418	1599787	0.200	4.00	20.0	30.0	60.0
m,p-Xylene	Ave	14386	242032	1121280	1906674	3746645	0.400	8.00	40.0	60.0	120
o-Xylene	Ave	5905	105573	492824	822225	1587248	0.200	4.00	20.0	30.0	60.0
Isopropylbenzene	Ave	4928	89156	420825	705005	1359921	0.200	4.00	20.0	30.0	60.0
n-Propylbenzene	Lin1	6312	98358	457083	765152	1486112	0.200	4.00	20.0	30.0	60.0
1,3,5-Trimethylbenzene	Lin1	9463	147988	686037	1155516	2256174	0.200	4.00	20.0	30.0	60.0
tert-Butylbenzene	Ave	4292	79427	372038	624834	1202086	0.200	4.00	20.0	30.0	60.0
1,2,4-Trimethylbenzene	Ave	6368	113801	537006	902882	1755407	0.200	4.00	20.0	30.0	60.0
sec-Butylbenzene	Ave	4483	84704	397414	672885	1295968	0.200	4.00	20.0	30.0	60.0
4-Isopropyltoluene	Ave	4593	83806	396600	668424	1289601	0.200	4.00	20.0	30.0	60.0
n-Butylbenzene	Ave	5170	88052	417848	707155	1372415	0.200	4.00	20.0	30.0	60.0
Naphthalene	Lin1	2464	58159	292696	509108	949564	0.200	4.00	20.0	30.0	60.0
a,a,a-Trifluorotoluene	Ave	258178	256030	209105	194300	265413	18.0	18.0	18.0	18.0	18.0
4-Bromofluorobenzene	Ave	615032	612822	506488	468577	634512	18.0	18.0	18.0	18.0	18.0

Curve Type Legend:

Ave = Average
Lin1 = Linear 1/conc

FORM VI
GC VOA BY EXTERNAL STANDARD - INITIAL CALIBRATION DATA
RETENTION TIME SUMMARY

Lab Name: TestAmerica Buffalo Job No.: 480-89467-1 Analy Batch No.: 266158

SDG No.:

Instrument ID: HP5890-3 GC Column: RTX-VGC ID: 0.53(mm) Heated Purge: (Y/N) N

Calibration Start Date: 09/29/2015 15:23 Calibration End Date: 09/29/2015 17:31 Calibration ID: 25065

Calibration Files:

LEVEL:	LAB SAMPLE ID:	LAB FILE ID:
Level 1	BLK	3_67154.D
Level 2	BLK	3_67155.D
Level 3	BLK	3_67156.D
Level 4	BLK	3_67157.D
Level 5	BLK	3_67158.D

ANALYTE	LVL 1	LVL 2	LVL 3	LVL 4	LVL 5						RT WINDOW	AVG RT
a,a,a-Trifluorotoluene	4.403	4.403	4.403	4.407	4.407						4.333 - 4.473	4.405
4-Bromofluorobenzene	10.323	10.323	10.327	10.333	10.343						10.257 - 10.397	10.330

691

FORM VI
GC VOA BY EXTERNAL STANDARD - INITIAL CALIBRATION DATA
CURVE EVALUATION

Lab Name: TestAmerica Buffalo Job No.: 480-89467-1 Analy Batch No.: 266158

SDG No.:

Instrument ID: HP5890-3 GC Column: RTX-VGC ID: 0.53(mm) Heated Purge: (Y/N) N

Calibration Start Date: 09/29/2015 15:23 Calibration End Date: 09/29/2015 17:31 Calibration ID: 25065

Calibration Files:

LEVEL:	LAB SAMPLE ID:	LAB FILE ID:
Level 1	BLK	3_67154.D
Level 2	BLK	3_67155.D
Level 3	BLK	3_67156.D
Level 4	BLK	3_67157.D
Level 5	BLK	3_67158.D

ANALYTE	CF				CURVE TYPE	COEFFICIENT			#	MIN CF	%RSD	#	MAX %RSD	R^2 OR COD	#	MIN R^2 OR COD
	LVL 1 LVL 5	LVL 2	LVL 3	LVL 4		B	M1	M2								
a,a,a-Trifluorotoluene	10695 8254.1	10991	11176	10918	Ave		10406.7444				11.7		20.0			
4-Bromofluorobenzene	25742 20050	26376	26955	26341	Ave		25092.7333				11.4		20.0			

Note: The m1 coefficient is the same as Ave CF for an Ave curve type.

FORM VI
GC VOA BY EXTERNAL STANDARD - INITIAL CALIBRATION DATA
RESPONSE AND CONCENTRATION

Lab Name: TestAmerica Buffalo Job No.: 480-89467-1 Analy Batch No.: 266158

SDG No.:

Instrument ID: HP5890-3 GC Column: RTX-VGC ID: 0.53(mm) Heated Purge: (Y/N) N

Calibration Start Date: 09/29/2015 15:23 Calibration End Date: 09/29/2015 17:31 Calibration ID: 25065

Calibration Files:

LEVEL:	LAB SAMPLE ID:	LAB FILE ID:
Level 1	BLK	3_67154.D
Level 2	BLK	3_67155.D
Level 3	BLK	3_67156.D
Level 4	BLK	3_67157.D
Level 5	BLK	3_67158.D

ANALYTE	CURVE TYPE	RESPONSE					CONCENTRATION (UG/L)				
		LVL 1	LVL 2	LVL 3	LVL 4	LVL 5	LVL 1	LVL 2	LVL 3	LVL 4	LVL 5
a,a,a-Trifluorotoluene	Ave	192505	197832	201174	196522	148574	18.0	18.0	18.0	18.0	18.0
4-Bromofluorobenzene	Ave	463354	474764	485185	474146	360897	18.0	18.0	18.0	18.0	18.0

Curve Type Legend:
Ave = Average

693

FORM VI
GC VOA BY EXTERNAL STANDARD - INITIAL CALIBRATION DATA
RETENTION TIME SUMMARY

Lab Name: TestAmerica Buffalo Job No.: 480-89467-1 Analy Batch No.: 266158

SDG No.:

Instrument ID: HP5890-3 GC Column: RTX-VGC ID: 0.53(mm) Heated Purge: (Y/N) N

Calibration Start Date: 09/29/2015 15:23 Calibration End Date: 09/29/2015 17:31 Calibration ID: 25066

Calibration Files:

LEVEL:	LAB SAMPLE ID:	LAB FILE ID:
Level 1	BLK	3_67154.D
Level 2	BLK	3_67155.D
Level 3	BLK	3_67156.D
Level 4	BLK	3_67157.D
Level 5	BLK	3_67158.D

ANALYTE	LVL 1	LVL 2	LVL 3	LVL 4	LVL 5						RT WINDOW	AVG RT
a,a,a-Trifluorotoluene	5.047	5.047	5.047	5.050	5.053						4.977 - 5.117	5.049
4-Bromofluorobenzene	12.450	12.450	12.453	12.457	12.463						12.383 - 12.523	12.455

694

FORM VI
GC VOA BY EXTERNAL STANDARD - INITIAL CALIBRATION DATA
CURVE EVALUATION

Lab Name: TestAmerica Buffalo Job No.: 480-89467-1 Analy Batch No.: 266158

SDG No.:

Instrument ID: HP5890-3 GC Column: RTX-VGC ID: 0.53(mm) Heated Purge: (Y/N) N

Calibration Start Date: 09/29/2015 15:23 Calibration End Date: 09/29/2015 17:31 Calibration ID: 25066

Calibration Files:

LEVEL:	LAB SAMPLE ID:	LAB FILE ID:
Level 1	BLK	3_67154.D
Level 2	BLK	3_67155.D
Level 3	BLK	3_67156.D
Level 4	BLK	3_67157.D
Level 5	BLK	3_67158.D

ANALYTE	CF				CURVE TYPE	COEFFICIENT			#	MIN CF	%RSD	#	MAX %RSD	R^2 OR COD	#	MIN R^2 OR COD
	LVL 1 LVL 5	LVL 2	LVL 3	LVL 4		B	M1	M2								
a,a,a-Trifluorotoluene	14576 11421	15048	15201	14916	Ave		14232.1889				11.2		20.0			
4-Bromofluorobenzene	35209 27199	35883	36485	35717	Ave		34098.7333				11.4		20.0			

Note: The m1 coefficient is the same as Ave CF for an Ave curve type.

FORM VI
GC VOA BY EXTERNAL STANDARD - INITIAL CALIBRATION DATA
RESPONSE AND CONCENTRATION

Lab Name: TestAmerica Buffalo Job No.: 480-89467-1 Analy Batch No.: 266158

SDG No.:

Instrument ID: HP5890-3 GC Column: RTX-VGC ID: 0.53(mm) Heated Purge: (Y/N) N

Calibration Start Date: 09/29/2015 15:23 Calibration End Date: 09/29/2015 17:31 Calibration ID: 25066

Calibration Files:

LEVEL:	LAB SAMPLE ID:	LAB FILE ID:
Level 1	BLK	3_67154.D
Level 2	BLK	3_67155.D
Level 3	BLK	3_67156.D
Level 4	BLK	3_67157.D
Level 5	BLK	3_67158.D

ANALYTE	CURVE TYPE	RESPONSE					CONCENTRATION (UG/L)				
		LVL 1	LVL 2	LVL 3	LVL 4	LVL 5	LVL 1	LVL 2	LVL 3	LVL 4	LVL 5
a,a,a-Trifluorotoluene	Ave	262362	270870	273612	268481	205572	18.0	18.0	18.0	18.0	18.0
4-Bromofluorobenzene	Ave	633770	645891	656738	642899	489588	18.0	18.0	18.0	18.0	18.0

Curve Type Legend:
Ave = Average

969

FORM VII
GC VOA CONTINUING CALIBRATION DATA

Lab Name: TestAmerica Buffalo Job No.: 480-89467-1

SDG No.:

Lab Sample ID: CCV 480-273207/2 Calibration Date: 11/05/2015 07:57

Instrument ID: HP5890-3 Calib Start Date: 09/10/2015 17:44

GC Column: RTX-VGC ID: 0.53(mm) Calib End Date: 09/10/2015 19:52

Lab File ID: 3_69022.D Conc. Units: ug/L Heated Purge: (Y/N) N

ANALYTE	CURVE TYPE	AVE CF	CF	MIN CF	CALC AMOUNT	SPIKE AMOUNT	%D	MAX %D
Methyl tert-butyl ether	Ave	8724	7723		17.7	20.0	-11.5	15.0
Benzene	Ave	25507	22271		17.5	20.0	-12.7	15.0
Toluene	Ave	23818	21053		17.7	20.0	-11.6	15.0
Ethylbenzene	Ave	20867	18791		18.0	20.0	-9.9	15.0
m,p-Xylene	Ave	24188	21394		35.4	40.0	-11.6	15.0
o-Xylene	Ave	21132	18519		17.5	20.0	-12.4	15.0
Isopropylbenzene	Ave	18328	16187		17.7	20.0	-11.7	15.0
n-Propylbenzene	Lin1		17794		18.3	20.0	-8.7	15.0
1,3,5-Trimethylbenzene	Lin1		26356		17.8	20.0	-10.9	15.0
tert-Butylbenzene	Ave	16019	14109		17.6	20.0	-11.9	15.0
1,2,4-Trimethylbenzene	Ave	22906	19216		16.8	20.0	-16.1*	15.0
sec-Butylbenzene	Ave	17748	16188		18.2	20.0	-8.8	15.0
4-Isopropyltoluene	Ave	16734	15195		18.2	20.0	-9.2	15.0
n-Butylbenzene	Ave	17021	16289		19.1	20.0	-4.3	15.0
Naphthalene	Lin1		8356		13.6	20.0	-32.1*	15.0

FORM VII
GC VOA CONTINUING CALIBRATION RETENTION TIME SUMMARY

Lab Name: TestAmerica Buffalo Job No.: 480-89467-1

SDG No.:

Lab Sample ID: CCV 480-273207/2 Calibration Date: 11/05/2015 07:57

Instrument ID: HP5890-3 Calib Start Date: 09/10/2015 17:44

GC Column: RTX-VGC ID: 0.53(mm) Calib End Date: 09/10/2015 19:52

Lab File ID: 3_69022.D Heated Purge: (Y/N) N

Analyte	RT	RT WINDOW	
		FROM	TO
Methyl tert-butyl ether	2.24	2.17	2.31
Benzene	3.49	3.42	3.56
Toluene	5.16	5.09	5.23
Ethylbenzene	7.49	7.42	7.56
m,p-Xylene	7.83	7.76	7.90
o-Xylene	8.84	8.77	8.91
Isopropylbenzene	9.69	9.62	9.76
n-Propylbenzene	10.80	10.73	10.87
1,3,5-Trimethylbenzene	11.41	11.34	11.48
tert-Butylbenzene	12.20	12.13	12.27
1,2,4-Trimethylbenzene	12.44	12.37	12.51
sec-Butylbenzene	12.71	12.64	12.78
4-Isopropyltoluene	13.20	13.13	13.27
n-Butylbenzene	14.40	14.33	14.47
Naphthalene	17.61	17.54	17.68

FORM VII
GC VOA CONTINUING CALIBRATION DATA

Lab Name: TestAmerica Buffalo Job No.: 480-89467-1

SDG No.:

Lab Sample ID: CCV 480-273207/2 Calibration Date: 11/05/2015 07:57

Instrument ID: HP5890-3 Calib Start Date: 09/29/2015 15:23

GC Column: RTX-VGC ID: 0.53(mm) Calib End Date: 09/29/2015 17:31

Lab File ID: 3_69022.D Conc. Units: ug/L Heated Purge: (Y/N) N

ANALYTE	CURVE TYPE	AVE CF	CF	MIN CF	CALC AMOUNT	SPIKE AMOUNT	%D	MAX %D
a,a,a-Trifluorotoluene	Ave	10407	12426		21.5	18.0	19.4	37.0
4-Bromofluorobenzene	Ave	25093	28992		20.8	18.0	15.5	36.0

FORM VII
GC VOA CONTINUING CALIBRATION RETENTION TIME SUMMARY

Lab Name: TestAmerica Buffalo Job No.: 480-89467-1

SDG No.:

Lab Sample ID: CCV 480-273207/2 Calibration Date: 11/05/2015 07:57

Instrument ID: HP5890-3 Calib Start Date: 09/29/2015 15:23

GC Column: RTX-VGC ID: 0.53(mm) Calib End Date: 09/29/2015 17:31

Lab File ID: 3_69022.D Heated Purge: (Y/N) N

Analyte	RT	RT WINDOW	
		FROM	TO
a,a,a-Trifluorotoluene	4.41	4.34	4.48
4-Bromofluorobenzene	10.32	10.25	10.39

FORM VII
GC VOA CONTINUING CALIBRATION DATA

Lab Name: TestAmerica Buffalo Job No.: 480-89467-1

SDG No.:

Lab Sample ID: CCV 480-273207/2 Calibration Date: 11/05/2015 07:57

Instrument ID: HP5890-3 Calib Start Date: 09/10/2015 17:44

GC Column: RTX-VGC ID: 0.53(mm) Calib End Date: 09/10/2015 19:52

Lab File ID: 3_69022.D Conc. Units: ug/L Heated Purge: (Y/N) N

ANALYTE	CURVE TYPE	AVE CF	CF	MIN CF	CALC AMOUNT	SPIKE AMOUNT	%D	MAX %D
Methyl tert-butyl ether	Ave	10656	10665		20.0	20.0	0.0	15.0
Benzene	Ave	32499	31612		19.5	20.0	-2.7	15.0
Toluene	Ave	30645	29196		19.1	20.0	-4.7	15.0
Ethylbenzene	Ave	27277	26861		19.7	20.0	-1.5	15.0
m,p-Xylene	Ave	31450	30437		38.7	40.0	-3.2	15.0
o-Xylene	Ave	26884	26127		19.4	20.0	-2.8	15.0
Isopropylbenzene	Ave	22827	22824		20.0	20.0	-0.0	15.0
n-Propylbenzene	Lin1		24712		20.1	20.0	0.3	15.0
1,3,5-Trimethylbenzene	Lin1		36932		19.8	20.0	-0.9	15.0
tert-Butylbenzene	Ave	20156	20187		20.0	20.0	0.2	15.0
1,2,4-Trimethylbenzene	Ave	29299	28456		19.4	20.0	-2.9	15.0
sec-Butylbenzene	Ave	21498	21668		20.2	20.0	0.8	15.0
4-Isopropyltoluene	Ave	21504	21456		20.0	20.0	-0.2	15.0
n-Butylbenzene	Ave	23040	22772		19.8	20.0	-1.2	15.0
Naphthalene	Lin1		12259		15.5	20.0	-22.6*	15.0

FORM VII
GC VOA CONTINUING CALIBRATION RETENTION TIME SUMMARY

Lab Name: TestAmerica Buffalo Job No.: 480-89467-1

SDG No.:

Lab Sample ID: CCV 480-273207/2 Calibration Date: 11/05/2015 07:57

Instrument ID: HP5890-3 Calib Start Date: 09/10/2015 17:44

GC Column: RTX-VGC ID: 0.53(mm) Calib End Date: 09/10/2015 19:52

Lab File ID: 3_69022.D Heated Purge: (Y/N) N

Analyte	RT	RT WINDOW	
		FROM	TO
Methyl tert-butyl ether	2.72	2.65	2.79
Benzene	4.17	4.10	4.24
Toluene	6.35	6.28	6.42
Ethylbenzene	9.62	9.55	9.69
m,p-Xylene	9.98	9.91	10.05
o-Xylene	10.97	10.90	11.04
Isopropylbenzene	12.01	11.94	12.08
n-Propylbenzene	13.18	13.11	13.25
1,3,5-Trimethylbenzene	13.77	13.70	13.84
tert-Butylbenzene	14.61	14.54	14.68
1,2,4-Trimethylbenzene	14.82	14.75	14.89
sec-Butylbenzene	15.30	15.23	15.37
4-Isopropyltoluene	15.74	15.67	15.81
n-Butylbenzene	16.47	16.40	16.54
Naphthalene	18.41	18.34	18.48

FORM VII
GC VOA CONTINUING CALIBRATION DATA

Lab Name: TestAmerica Buffalo Job No.: 480-89467-1

SDG No.:

Lab Sample ID: CCV 480-273207/2 Calibration Date: 11/05/2015 07:57

Instrument ID: HP5890-3 Calib Start Date: 09/29/2015 15:23

GC Column: RTX-VGC ID: 0.53(mm) Calib End Date: 09/29/2015 17:31

Lab File ID: 3_69022.D Conc. Units: ug/L Heated Purge: (Y/N) N

ANALYTE	CURVE TYPE	AVE CF	CF	MIN CF	CALC AMOUNT	SPIKE AMOUNT	%D	MAX %D
a,a,a-Trifluorotoluene	Ave	14232	17912		22.7	18.0	25.9	37.0
4-Bromofluorobenzene	Ave	34099	41726		22.0	18.0	22.4	36.0

FORM VII
GC VOA CONTINUING CALIBRATION RETENTION TIME SUMMARY

Lab Name: TestAmerica Buffalo Job No.: 480-89467-1

SDG No.:

Lab Sample ID: CCV 480-273207/2 Calibration Date: 11/05/2015 07:57

Instrument ID: HP5890-3 Calib Start Date: 09/29/2015 15:23

GC Column: RTX-VGC ID: 0.53(mm) Calib End Date: 09/29/2015 17:31

Lab File ID: 3_69022.D Heated Purge: (Y/N) N

Analyte	RT	RT WINDOW	
		FROM	TO
a,a,a-Trifluorotoluene	5.06	4.99	5.13
4-Bromofluorobenzene	12.45	12.38	12.52

FORM VII
GC VOA CONTINUING CALIBRATION DATA

Lab Name: TestAmerica Buffalo Job No.: 480-89467-1

SDG No.:

Lab Sample ID: CCV 480-273207/12 Calibration Date: 11/05/2015 14:14

Instrument ID: HP5890-3 Calib Start Date: 09/10/2015 17:44

GC Column: RTX-VGC ID: 0.53(mm) Calib End Date: 09/10/2015 19:52

Lab File ID: 3_69032.D Conc. Units: ug/L Heated Purge: (Y/N) N

ANALYTE	CURVE TYPE	AVE CF	CF	MIN CF	CALC AMOUNT	SPIKE AMOUNT	%D	MAX %D
Methyl tert-butyl ether	Ave	8724	8591		19.7	20.0	-1.5	15.0
Benzene	Ave	25507	22770		17.9	20.0	-10.7	15.0
Toluene	Ave	23818	21490		18.0	20.0	-9.8	15.0
Ethylbenzene	Ave	20867	19371		18.6	20.0	-7.2	15.0
m,p-Xylene	Ave	24188	21861		36.2	40.0	-9.6	15.0
o-Xylene	Ave	21132	19083		18.1	20.0	-9.7	15.0
Isopropylbenzene	Ave	18328	16983		18.5	20.0	-7.3	15.0
n-Propylbenzene	Lin1		18025		18.5	20.0	-7.5	15.0
1,3,5-Trimethylbenzene	Lin1		27093		18.3	20.0	-8.4	15.0
tert-Butylbenzene	Ave	16019	14554		18.2	20.0	-9.1	15.0
1,2,4-Trimethylbenzene	Ave	22906	19435		17.0	20.0	-15.2*	15.0
sec-Butylbenzene	Ave	17748	16877		19.0	20.0	-4.9	15.0
4-Isopropyltoluene	Ave	16734	15504		18.5	20.0	-7.4	15.0
n-Butylbenzene	Ave	17021	16466		19.3	20.0	-3.3	15.0
Naphthalene	Lin1		9761		15.8	20.0	-20.8*	15.0

FORM VII
GC VOA CONTINUING CALIBRATION RETENTION TIME SUMMARY

Lab Name: TestAmerica Buffalo Job No.: 480-89467-1

SDG No.:

Lab Sample ID: CCV 480-273207/12 Calibration Date: 11/05/2015 14:14

Instrument ID: HP5890-3 Calib Start Date: 09/10/2015 17:44

GC Column: RTX-VGC ID: 0.53(mm) Calib End Date: 09/10/2015 19:52

Lab File ID: 3_69032.D Heated Purge: (Y/N) N

Analyte	RT	RT WINDOW	
		FROM	TO
Methyl tert-butyl ether	2.26	2.19	2.33
Benzene	3.51	3.44	3.58
Toluene	5.17	5.10	5.24
Ethylbenzene	7.51	7.44	7.58
m,p-Xylene	7.85	7.78	7.92
o-Xylene	8.86	8.79	8.93
Isopropylbenzene	9.71	9.64	9.78
n-Propylbenzene	10.82	10.75	10.89
1,3,5-Trimethylbenzene	11.44	11.37	11.51
tert-Butylbenzene	12.23	12.16	12.30
1,2,4-Trimethylbenzene	12.46	12.39	12.53
sec-Butylbenzene	12.73	12.66	12.80
4-Isopropyltoluene	13.23	13.16	13.30
n-Butylbenzene	14.42	14.35	14.49
Naphthalene	17.62	17.55	17.69

FORM VII
GC VOA CONTINUING CALIBRATION DATA

Lab Name: TestAmerica Buffalo Job No.: 480-89467-1

SDG No.:

Lab Sample ID: CCV 480-273207/12 Calibration Date: 11/05/2015 14:14

Instrument ID: HP5890-3 Calib Start Date: 09/29/2015 15:23

GC Column: RTX-VGC ID: 0.53(mm) Calib End Date: 09/29/2015 17:31

Lab File ID: 3_69032.D Conc. Units: ug/L Heated Purge: (Y/N) N

ANALYTE	CURVE TYPE	AVE CF	CF	MIN CF	CALC AMOUNT	SPIKE AMOUNT	%D	MAX %D
a,a,a-Trifluorotoluene	Ave	10407	10453		18.1	18.0	0.4	37.0
4-Bromofluorobenzene	Ave	25093	24555		17.6	18.0	-2.1	36.0

FORM VII
GC VOA CONTINUING CALIBRATION RETENTION TIME SUMMARY

Lab Name: TestAmerica Buffalo Job No.: 480-89467-1

SDG No.:

Lab Sample ID: CCV 480-273207/12 Calibration Date: 11/05/2015 14:14

Instrument ID: HP5890-3 Calib Start Date: 09/29/2015 15:23

GC Column: RTX-VGC ID: 0.53(mm) Calib End Date: 09/29/2015 17:31

Lab File ID: 3_69032.D Heated Purge: (Y/N) N

Analyte	RT	RT WINDOW	
		FROM	TO
a,a,a-Trifluorotoluene	4.43	4.36	4.50
4-Bromofluorobenzene	10.34	10.27	10.41

FORM VII
GC VOA CONTINUING CALIBRATION DATA

Lab Name: TestAmerica Buffalo Job No.: 480-89467-1

SDG No.:

Lab Sample ID: CCV 480-273207/12 Calibration Date: 11/05/2015 14:14

Instrument ID: HP5890-3 Calib Start Date: 09/10/2015 17:44

GC Column: RTX-VGC ID: 0.53(mm) Calib End Date: 09/10/2015 19:52

Lab File ID: 3_69032.D Conc. Units: ug/L Heated Purge: (Y/N) N

ANALYTE	CURVE TYPE	AVE CF	CF	MIN CF	CALC AMOUNT	SPIKE AMOUNT	%D	MAX %D
Methyl tert-butyl ether	Ave	10656	10936		20.5	20.0	2.6	15.0
Benzene	Ave	32499	31497		19.4	20.0	-3.1	15.0
Toluene	Ave	30645	29051		19.0	20.0	-5.2	15.0
Ethylbenzene	Ave	27277	26770		19.6	20.0	-1.9	15.0
m,p-Xylene	Ave	31450	31113		39.6	40.0	-1.1	15.0
o-Xylene	Ave	26884	26425		19.7	20.0	-1.7	15.0
Isopropylbenzene	Ave	22827	23005		20.2	20.0	0.8	15.0
n-Propylbenzene	Lin1		24943		20.2	20.0	1.2	15.0
1,3,5-Trimethylbenzene	Lin1		37523		20.1	20.0	0.7	15.0
tert-Butylbenzene	Ave	20156	20538		20.4	20.0	1.9	15.0
1,2,4-Trimethylbenzene	Ave	29299	29217		19.9	20.0	-0.3	15.0
sec-Butylbenzene	Ave	21498	22143		20.6	20.0	3.0	15.0
4-Isopropyltoluene	Ave	21504	21778		20.3	20.0	1.3	15.0
n-Butylbenzene	Ave	23040	22831		19.8	20.0	-0.9	15.0
Naphthalene	Lin1		13886		17.5	20.0	-12.4	15.0

FORM VII
GC VOA CONTINUING CALIBRATION RETENTION TIME SUMMARY

Lab Name: TestAmerica Buffalo Job No.: 480-89467-1

SDG No.:

Lab Sample ID: CCV 480-273207/12 Calibration Date: 11/05/2015 14:14

Instrument ID: HP5890-3 Calib Start Date: 09/10/2015 17:44

GC Column: RTX-VGC ID: 0.53(mm) Calib End Date: 09/10/2015 19:52

Lab File ID: 3_69032.D Heated Purge: (Y/N) N

Analyte	RT	RT WINDOW	
		FROM	TO
Methyl tert-butyl ether	2.74	2.67	2.81
Benzene	4.18	4.11	4.25
Toluene	6.36	6.29	6.43
Ethylbenzene	9.64	9.57	9.71
m,p-Xylene	10.01	9.94	10.08
o-Xylene	10.99	10.92	11.06
Isopropylbenzene	12.04	11.97	12.11
n-Propylbenzene	13.21	13.14	13.28
1,3,5-Trimethylbenzene	13.80	13.73	13.87
tert-Butylbenzene	14.63	14.56	14.70
1,2,4-Trimethylbenzene	14.85	14.78	14.92
sec-Butylbenzene	15.33	15.26	15.40
4-Isopropyltoluene	15.76	15.69	15.83
n-Butylbenzene	16.48	16.41	16.55
Naphthalene	18.42	18.35	18.49

FORM VII
GC VOA CONTINUING CALIBRATION DATA

Lab Name: TestAmerica Buffalo Job No.: 480-89467-1

SDG No.:

Lab Sample ID: CCV 480-273207/12 Calibration Date: 11/05/2015 14:14

Instrument ID: HP5890-3 Calib Start Date: 09/29/2015 15:23

GC Column: RTX-VGC ID: 0.53(mm) Calib End Date: 09/29/2015 17:31

Lab File ID: 3_69032.D Conc. Units: ug/L Heated Purge: (Y/N) N

ANALYTE	CURVE TYPE	AVE CF	CF	MIN CF	CALC AMOUNT	SPIKE AMOUNT	%D	MAX %D
a,a,a-Trifluorotoluene	Ave	14232	14658		18.5	18.0	3.0	37.0
4-Bromofluorobenzene	Ave	34099	34832		18.4	18.0	2.2	36.0

FORM VII
GC VOA CONTINUING CALIBRATION RETENTION TIME SUMMARY

Lab Name: TestAmerica Buffalo Job No.: 480-89467-1

SDG No.:

Lab Sample ID: CCV 480-273207/12 Calibration Date: 11/05/2015 14:14

Instrument ID: HP5890-3 Calib Start Date: 09/29/2015 15:23

GC Column: RTX-VGC ID: 0.53(mm) Calib End Date: 09/29/2015 17:31

Lab File ID: 3_69032.D Heated Purge: (Y/N) N

Analyte	RT	RT WINDOW	
		FROM	TO
a,a,a-Trifluorotoluene	5.08	5.01	5.15
4-Bromofluorobenzene	12.47	12.40	12.54

FORM VII
GC VOA CONTINUING CALIBRATION DATA

Lab Name: TestAmerica Buffalo Job No.: 480-89467-1

SDG No.:

Lab Sample ID: CCV 480-273207/22 Calibration Date: 11/05/2015 20:16

Instrument ID: HP5890-3 Calib Start Date: 09/10/2015 17:44

GC Column: RTX-VGC ID: 0.53(mm) Calib End Date: 09/10/2015 19:52

Lab File ID: 3_69042.D Conc. Units: ug/L Heated Purge: (Y/N) N

ANALYTE	CURVE TYPE	AVE CF	CF	MIN CF	CALC AMOUNT	SPIKE AMOUNT	%D	MAX %D
Methyl tert-butyl ether	Ave	8724	8237		18.9	20.0	-5.6	15.0
Benzene	Ave	25507	22435		17.6	20.0	-12.0	15.0
Toluene	Ave	23818	21048		17.7	20.0	-11.6	15.0
Ethylbenzene	Ave	20867	19029		18.2	20.0	-8.8	15.0
m,p-Xylene	Ave	24188	21523		35.6	40.0	-11.0	15.0
o-Xylene	Ave	21132	18699		17.7	20.0	-11.5	15.0
Isopropylbenzene	Ave	18328	17462		19.1	20.0	-4.7	15.0
n-Propylbenzene	Lin1		17776		18.2	20.0	-8.8	15.0
1,3,5-Trimethylbenzene	Lin1		27017		18.3	20.0	-8.7	15.0
tert-Butylbenzene	Ave	16019	14148		17.7	20.0	-11.7	15.0
1,2,4-Trimethylbenzene	Ave	22906	18360		16.0	20.0	-19.8*	15.0
sec-Butylbenzene	Ave	17748	17134		19.3	20.0	-3.5	15.0
4-Isopropyltoluene	Ave	16734	15257		18.2	20.0	-8.8	15.0
n-Butylbenzene	Ave	17021	16286		19.1	20.0	-4.3	15.0
Naphthalene	Lin1		8218		13.4	20.0	-33.2*	15.0

FORM VII
GC VOA CONTINUING CALIBRATION RETENTION TIME SUMMARY

Lab Name: TestAmerica Buffalo Job No.: 480-89467-1

SDG No.:

Lab Sample ID: CCV 480-273207/22 Calibration Date: 11/05/2015 20:16

Instrument ID: HP5890-3 Calib Start Date: 09/10/2015 17:44

GC Column: RTX-VGC ID: 0.53(mm) Calib End Date: 09/10/2015 19:52

Lab File ID: 3_69042.D Heated Purge: (Y/N) N

Analyte	RT	RT WINDOW	
		FROM	TO
Methyl tert-butyl ether	2.26	2.19	2.33
Benzene	3.50	3.43	3.57
Toluene	5.17	5.10	5.24
Ethylbenzene	7.48	7.41	7.55
m,p-Xylene	7.83	7.76	7.90
o-Xylene	8.84	8.77	8.91
Isopropylbenzene	9.68	9.61	9.75
n-Propylbenzene	10.79	10.72	10.86
1,3,5-Trimethylbenzene	11.42	11.35	11.49
tert-Butylbenzene	12.20	12.13	12.27
1,2,4-Trimethylbenzene	12.44	12.37	12.51
sec-Butylbenzene	12.71	12.64	12.78
4-Isopropyltoluene	13.21	13.14	13.28
n-Butylbenzene	14.40	14.33	14.47
Naphthalene	17.61	17.54	17.68

FORM VII
GC VOA CONTINUING CALIBRATION DATA

Lab Name: TestAmerica Buffalo Job No.: 480-89467-1

SDG No.:

Lab Sample ID: CCV 480-273207/22 Calibration Date: 11/05/2015 20:16

Instrument ID: HP5890-3 Calib Start Date: 09/29/2015 15:23

GC Column: RTX-VGC ID: 0.53(mm) Calib End Date: 09/29/2015 17:31

Lab File ID: 3_69042.D Conc. Units: ug/L Heated Purge: (Y/N) N

ANALYTE	CURVE TYPE	AVE CF	CF	MIN CF	CALC AMOUNT	SPIKE AMOUNT	%D	MAX %D
a,a,a-Trifluorotoluene	Ave	10407	13843		23.9	18.0	33.0	37.0
4-Bromofluorobenzene	Ave	25093	32057		23.0	18.0	27.8	36.0

FORM VII
GC VOA CONTINUING CALIBRATION RETENTION TIME SUMMARY

Lab Name: TestAmerica Buffalo Job No.: 480-89467-1

SDG No.:

Lab Sample ID: CCV 480-273207/22 Calibration Date: 11/05/2015 20:16

Instrument ID: HP5890-3 Calib Start Date: 09/29/2015 15:23

GC Column: RTX-VGC ID: 0.53(mm) Calib End Date: 09/29/2015 17:31

Lab File ID: 3_69042.D Heated Purge: (Y/N) N

Analyte	RT	RT WINDOW	
		FROM	TO
a,a,a-Trifluorotoluene	4.42	4.35	4.49
4-Bromofluorobenzene	10.31	10.24	10.38

FORM VII
GC VOA CONTINUING CALIBRATION DATA

Lab Name: TestAmerica Buffalo Job No.: 480-89467-1

SDG No.:

Lab Sample ID: CCV 480-273207/22 Calibration Date: 11/05/2015 20:16

Instrument ID: HP5890-3 Calib Start Date: 09/10/2015 17:44

GC Column: RTX-VGC ID: 0.53(mm) Calib End Date: 09/10/2015 19:52

Lab File ID: 3_69042.D Conc. Units: ug/L Heated Purge: (Y/N) N

ANALYTE	CURVE TYPE	AVE CF	CF	MIN CF	CALC AMOUNT	SPIKE AMOUNT	%D	MAX %D
Methyl tert-butyl ether	Ave	10656	10442		19.6	20.0	-2.0	15.0
Benzene	Ave	32499	31550		19.4	20.0	-2.9	15.0
Toluene	Ave	30645	28553		18.6	20.0	-6.8	15.0
Ethylbenzene	Ave	27277	26622		19.5	20.0	-2.4	15.0
m,p-Xylene	Ave	31450	31552		40.1	40.0	0.3	15.0
o-Xylene	Ave	26884	26363		19.6	20.0	-1.9	15.0
Isopropylbenzene	Ave	22827	22660		19.9	20.0	-0.7	15.0
n-Propylbenzene	Lin1		24653		20.0	20.0	0.0	15.0
1,3,5-Trimethylbenzene	Lin1		37332		20.0	20.0	0.2	15.0
tert-Butylbenzene	Ave	20156	20064		19.9	20.0	-0.5	15.0
1,2,4-Trimethylbenzene	Ave	29299	28981		19.8	20.0	-1.1	15.0
sec-Butylbenzene	Ave	21498	21867		20.3	20.0	1.7	15.0
4-Isopropyltoluene	Ave	21504	21470		20.0	20.0	-0.2	15.0
n-Butylbenzene	Ave	23040	22636		19.6	20.0	-1.8	15.0
Naphthalene	Lin1		12155		15.3	20.0	-23.3*	15.0

FORM VII
GC VOA CONTINUING CALIBRATION RETENTION TIME SUMMARY

Lab Name: TestAmerica Buffalo Job No.: 480-89467-1

SDG No.:

Lab Sample ID: CCV 480-273207/22 Calibration Date: 11/05/2015 20:16

Instrument ID: HP5890-3 Calib Start Date: 09/10/2015 17:44

GC Column: RTX-VGC ID: 0.53(mm) Calib End Date: 09/10/2015 19:52

Lab File ID: 3_69042.D Heated Purge: (Y/N) N

Analyte	RT	RT WINDOW	
		FROM	TO
Methyl tert-butyl ether	2.74	2.67	2.81
Benzene	4.18	4.11	4.25
Toluene	6.35	6.28	6.42
Ethylbenzene	9.62	9.55	9.69
m,p-Xylene	9.98	9.91	10.05
o-Xylene	10.96	10.89	11.03
Isopropylbenzene	12.01	11.94	12.08
n-Propylbenzene	13.18	13.11	13.25
1,3,5-Trimethylbenzene	13.78	13.71	13.85
tert-Butylbenzene	14.60	14.53	14.67
1,2,4-Trimethylbenzene	14.83	14.76	14.90
sec-Butylbenzene	15.30	15.23	15.37
4-Isopropyltoluene	15.74	15.67	15.81
n-Butylbenzene	16.47	16.40	16.54
Naphthalene	18.41	18.34	18.48

FORM VII
GC VOA CONTINUING CALIBRATION DATA

Lab Name: TestAmerica Buffalo Job No.: 480-89467-1

SDG No.:

Lab Sample ID: CCV 480-273207/22 Calibration Date: 11/05/2015 20:16

Instrument ID: HP5890-3 Calib Start Date: 09/29/2015 15:23

GC Column: RTX-VGC ID: 0.53(mm) Calib End Date: 09/29/2015 17:31

Lab File ID: 3_69042.D Conc. Units: ug/L Heated Purge: (Y/N) N

ANALYTE	CURVE TYPE	AVE CF	CF	MIN CF	CALC AMOUNT	SPIKE AMOUNT	%D	MAX %D
a,a,a-Trifluorotoluene	Ave	14232	19815		25.1	18.0	39.2*	37.0
4-Bromofluorobenzene	Ave	34099	46416		24.5	18.0	36.1*	36.0

FORM VII
GC VOA CONTINUING CALIBRATION RETENTION TIME SUMMARY

Lab Name: TestAmerica Buffalo Job No.: 480-89467-1

SDG No.:

Lab Sample ID: CCV 480-273207/22 Calibration Date: 11/05/2015 20:16

Instrument ID: HP5890-3 Calib Start Date: 09/29/2015 15:23

GC Column: RTX-VGC ID: 0.53(mm) Calib End Date: 09/29/2015 17:31

Lab File ID: 3_69042.D Heated Purge: (Y/N) N

Analyte	RT	RT WINDOW	
		FROM	TO
a,a,a-Trifluorotoluene	5.07	5.00	5.14
4-Bromofluorobenzene	12.44	12.37	12.51

FORM I
GC VOA ORGANICS ANALYSIS DATA SHEET

Lab Name: TestAmerica Buffalo
Job No.: 480-89467-1
SDG No.:
Client Sample ID:
Lab Sample ID: MB 480-273207/3
Matrix: Water
Lab File ID: 3_69023.D
Analysis Method: 8021B
Date Collected:
Sample wt/vol: 44(mL)
Date Analyzed: 11/05/2015 08:28
Soil Aliquot Vol:
Dilution Factor: 1
Soil Extract Vol.:
GC Column: RTX-VGC ID: 0.53(mm)
% Moisture:
Level: (low/med) Low
Analysis Batch No.: 273207
Units: ug/L

CAS NO.	COMPOUND NAME	RESULT	Q	RL	MDL
71-43-2	Benzene	ND		0.20	0.023
108-88-3	Toluene	ND		0.20	0.036
100-41-4	Ethylbenzene	ND		0.20	0.029
179601-23-1	m,p-Xylene	ND		0.40	0.054
95-47-6	o-Xylene	ND		0.20	0.027
1330-20-7	Xylenes, Total	ND		0.60	0.054

CAS NO.	SURROGATE	%REC	Q	LIMITS
98-08-8	a,a,a-Trifluorotoluene	128		63-145
460-00-4	4-Bromofluorobenzene	123		64-141

FORM I
GC VOA ORGANICS ANALYSIS DATA SHEET

Lab Name: TestAmerica Buffalo
Job No.: 480-89467-1
SDG No.:
Client Sample ID:
Lab Sample ID: LCS 480-273207/4
Matrix: Water
Lab File ID: 3_69024.D
Analysis Method: 8021B
Date Collected:
Sample wt/vol: 44(mL)
Date Analyzed: 11/05/2015 09:00
Soil Aliquot Vol:
Dilution Factor: 1
Soil Extract Vol.:
GC Column: RTX-VGC ID: 0.53(mm)
% Moisture:
Level: (low/med) Low
Analysis Batch No.: 273207
Units: ug/L

CAS NO.	COMPOUND NAME	RESULT	Q	RL	MDL
71-43-2	Benzene	3.62		0.20	0.023
108-88-3	Toluene	3.52		0.20	0.036
100-41-4	Ethylbenzene	3.58		0.20	0.029
179601-23-1	m,p-Xylene	7.32		0.40	0.054
95-47-6	o-Xylene	3.53		0.20	0.027

CAS NO.	SURROGATE	%REC	Q	LIMITS
98-08-8	a,a,a-Trifluorotoluene	127		63-145
460-00-4	4-Bromofluorobenzene	119		64-141

FORM I
GC VOA ORGANICS ANALYSIS DATA SHEET

Lab Name: TestAmerica Buffalo
Job No.: 480-89467-1
SDG No.:
Client Sample ID:
Lab Sample ID: LCSD 480-273207/5
Matrix: Water
Lab File ID: 3_69025.D
Analysis Method: 8021B
Date Collected:
Sample wt/vol: 44(mL)
Date Analyzed: 11/05/2015 09:31
Soil Aliquot Vol:
Dilution Factor: 1
Soil Extract Vol.:
GC Column: RTX-VGC ID: 0.53(mm)
% Moisture:
Level: (low/med) Low
Analysis Batch No.: 273207
Units: ug/L

CAS NO.	COMPOUND NAME	RESULT	Q	RL	MDL
71-43-2	Benzene	3.63		0.20	0.023
108-88-3	Toluene	3.49		0.20	0.036
100-41-4	Ethylbenzene	3.63		0.20	0.029
179601-23-1	m,p-Xylene	7.43		0.40	0.054
95-47-6	o-Xylene	3.56		0.20	0.027

CAS NO.	SURROGATE	%REC	Q	LIMITS
98-08-8	a,a,a-Trifluorotoluene	133		63-145
460-00-4	4-Bromofluorobenzene	125		64-141

GC VOA ANALYSIS RUN LOG

Lab Name: TestAmerica Buffalo Job No.: 480-89467-1

SDG No.:

Instrument ID: HP5890-3 Start Date: 09/10/2015 17:44

Analysis Batch Number: 262944 End Date: 09/10/2015 20:23

LAB SAMPLE ID	CLIENT SAMPLE ID	DATE ANALYZED	DILUTION FACTOR	LAB FILE ID	COLUMN ID
STD1 480-262944/2 IC		09/10/2015 17:44	1	3_67061.D	RTX-VGC 0.53(mm)
STD1 480-262944/2 IC		09/10/2015 17:44	1	3_67061.D	RTX-VGC 0.53(mm)
STD2 480-262944/3 IC		09/10/2015 18:16	1	3_67062.D	RTX-VGC 0.53(mm)
STD2 480-262944/3 IC		09/10/2015 18:16	1	3_67062.D	RTX-VGC 0.53(mm)
STD3 480-262944/4 IC		09/10/2015 18:48	1	3_67063.D	RTX-VGC 0.53(mm)
STD3 480-262944/4 IC		09/10/2015 18:48	1	3_67063.D	RTX-VGC 0.53(mm)
STD4 480-262944/5 IC		09/10/2015 19:20	1	3_67064.D	RTX-VGC 0.53(mm)
STD4 480-262944/5 IC		09/10/2015 19:20	1	3_67064.D	RTX-VGC 0.53(mm)
STD5 480-262944/6 IC		09/10/2015 19:52	1	3_67065.D	RTX-VGC 0.53(mm)
STD5 480-262944/6 IC		09/10/2015 19:52	1	3_67065.D	RTX-VGC 0.53(mm)
ICV 480-262944/7		09/10/2015 20:23	1		RTX-VGC 0.53(mm)
ICV 480-262944/7		09/10/2015 20:23	1		RTX-VGC 0.53(mm)

GC VOA ANALYSIS RUN LOG

Lab Name: TestAmerica Buffalo Job No.: 480-89467-1

SDG No.:

Instrument ID: HP5890-3 Start Date: 09/29/2015 15:23

Analysis Batch Number: 266158 End Date: 09/29/2015 17:31

LAB SAMPLE ID	CLIENT SAMPLE ID	DATE ANALYZED	DILUTION FACTOR	LAB FILE ID	COLUMN ID
BLK		09/29/2015 15:23	1	3_67154.D	RTX-VGC 0.53(mm)
BLK		09/29/2015 15:23	1	3_67154.D	RTX-VGC 0.53(mm)
BLK		09/29/2015 15:55	1	3_67155.D	RTX-VGC 0.53(mm)
BLK		09/29/2015 15:55	1	3_67155.D	RTX-VGC 0.53(mm)
BLK		09/29/2015 16:27	1	3_67156.D	RTX-VGC 0.53(mm)
BLK		09/29/2015 16:27	1	3_67156.D	RTX-VGC 0.53(mm)
BLK		09/29/2015 16:59	1	3_67157.D	RTX-VGC 0.53(mm)
BLK		09/29/2015 16:59	1	3_67157.D	RTX-VGC 0.53(mm)
BLK		09/29/2015 17:31	1	3_67158.D	RTX-VGC 0.53(mm)
BLK		09/29/2015 17:31	1	3_67158.D	RTX-VGC 0.53(mm)

GC VOA ANALYSIS RUN LOG

Lab Name: TestAmerica Buffalo Job No.: 480-89467-1

SDG No.:

Instrument ID: HP5890-3 Start Date: 11/05/2015 07:57

Analysis Batch Number: 273207 End Date: 11/05/2015 20:16

LAB SAMPLE ID	CLIENT SAMPLE ID	DATE ANALYZED	DILUTION FACTOR	LAB FILE ID	COLUMN ID
CCV 480-273207/2		11/05/2015 07:57	1	3_69022.D	RTX-VGC 0.53(mm)
CCV 480-273207/2		11/05/2015 07:57	1	3_69022.D	RTX-VGC 0.53(mm)
MB 480-273207/3		11/05/2015 08:28	1	3_69023.D	RTX-VGC 0.53(mm)
MB 480-273207/3		11/05/2015 08:28	1	3_69023.D	RTX-VGC 0.53(mm)
LCS 480-273207/4		11/05/2015 09:00	1	3_69024.D	RTX-VGC 0.53(mm)
LCS 480-273207/4		11/05/2015 09:00	1	3_69024.D	RTX-VGC 0.53(mm)
LCSD 480-273207/5		11/05/2015 09:31	1	3_69025.D	RTX-VGC 0.53(mm)
LCSD 480-273207/5		11/05/2015 09:31	1	3_69025.D	RTX-VGC 0.53(mm)
480-89467-1	WW-01-101514-1120	11/05/2015 11:33	200	3_69027.D	RTX-VGC 0.53(mm)
480-89467-1	WW-01-101514-1120	11/05/2015 11:33	200	3_69027.D	RTX-VGC 0.53(mm)
480-89467-3	WW-01-031915-1550	11/05/2015 12:05	800	3_69028.D	RTX-VGC 0.53(mm)
480-89467-3	WW-01-031915-1550	11/05/2015 12:05	800	3_69028.D	RTX-VGC 0.53(mm)
480-89467-4	WW-01-041415-1640	11/05/2015 12:38	200	3_69029.D	RTX-VGC 0.53(mm)
480-89467-4	WW-01-041415-1640	11/05/2015 12:38	200	3_69029.D	RTX-VGC 0.53(mm)
480-89467-7	WW-01-050615-1552	11/05/2015 13:10	200	3_69030.D	RTX-VGC 0.53(mm)
480-89467-7	WW-01-050615-1552	11/05/2015 13:10	200	3_69030.D	RTX-VGC 0.53(mm)
CCV 480-273207/12		11/05/2015 14:14	1	3_69032.D	RTX-VGC 0.53(mm)
CCV 480-273207/12		11/05/2015 14:14	1	3_69032.D	RTX-VGC 0.53(mm)
480-89467-11	P-01-031315-1531	11/05/2015 15:10	2000	3_69033.D	RTX-VGC 0.53(mm)
480-89467-11	P-01-031315-1531	11/05/2015 15:10	2000	3_69033.D	RTX-VGC 0.53(mm)
480-89467-12	P-01-050615-1552	11/05/2015 16:14	400	3_69035.D	RTX-VGC 0.53(mm)
480-89467-12	P-01-050615-1552	11/05/2015 16:14	400	3_69035.D	RTX-VGC 0.53(mm)
480-89467-21	P-01-040115-1600	11/05/2015 16:45	800	3_69036.D	RTX-VGC 0.53(mm)
480-89467-21	P-01-040115-1600	11/05/2015 16:45	800	3_69036.D	RTX-VGC 0.53(mm)
480-89467-9	WW-01-052015-1500	11/05/2015 18:41	200	3_69039.D	RTX-VGC 0.53(mm)
480-89467-9	WW-01-052015-1500	11/05/2015 18:41	200	3_69039.D	RTX-VGC 0.53(mm)
480-89467-23	P-01-012215-0948	11/05/2015 19:13	800	3_69040.D	RTX-VGC 0.53(mm)
480-89467-23	P-01-012215-0948	11/05/2015 19:13	800	3_69040.D	RTX-VGC 0.53(mm)
480-89467-24	WW-01-031315-1531	11/05/2015 19:44	200	3_69041.D	RTX-VGC 0.53(mm)
480-89467-24	WW-01-031315-1531	11/05/2015 19:44	200	3_69041.D	RTX-VGC 0.53(mm)
CCV 480-273207/22		11/05/2015 20:16	1	3_69042.D	RTX-VGC 0.53(mm)
CCV 480-273207/22		11/05/2015 20:16	1	3_69042.D	RTX-VGC 0.53(mm)

8021B

Shipping and Receiving Documents

Chain of Custody Record

TAL-4124 (1007)

Temperature on Receipt _____

Drinking Water? Yes☐ No☐

TestAmerica

THE LEADER IN ENVIRONMENTAL TESTING

89473

Client: USACE	Project Manager: STEPHEN COSPER	Date:	Chain of Custody Number: 284252
Address:	Telephone Number (Area Code)/Fax Number:	Lab Number:	Page 1 of 2
City: / State: / Zip Code:	Site Contact:	Lab Contact: B FISCHER	
Project Name and Location (State): * 12846	Carrier/Waybill Number:		
Contract/Purchase Order/Quote No.:			

Analysis (Attach list if more space is needed)

Special Instructions/ Conditions of Receipt: 89467

Sample I.D. No. and Description (Containers for each sample may be combined on one line)	Date	Time	Matrix: Air	Aqueous	Sed.	Soil	Containers & Preservatives: Unpres.	H2SO4	HNO3	HCl	NaOH	ZnAc/ NaOH	Special Instructions/ Conditions of Receipt
WW-01-101514-1120													89467
WW-02-030515-1557													COND H2O
WW-01-031915-1550													↓
WW-01 041415-1640													
WW-01-030515-1352													CONDENSATE
WW-01-042815-1600													↓
WW-01-050615-1552													
(P) WW-01-050715-1600													
(B) WW-01-052015-1500													↓
P-01-030515-1557													POLISHER
P-01-031315-1531													↓
P-01-050615-1552													

480-89473 Chain of Custody

Possible Hazard Identification: ☐ Non-Hazard ☐ Flammable ☐ Skin Irritant ☐ Poison B ☐ Unknown

Sample Disposal: ☐ Return To Client ☐ Disposal By Lab ☐ Archive For _____ Months (A fee may be assessed if samples are retained longer than 1 month)

Turn Around Time Required: ☐ 24 Hours ☐ 48 Hours ☐ 7 Days ☐ 14 Days ☐ 21 Days ☐ Other _____

QC Requirements (Specify)

	Date	Time		Date	Time
1. Relinquished By			1. Received By: [signature] TRANSFORD	10/20/15	0920
2. Relinquished By			2. Received By		
3. Relinquished By			3. Received By		

Comments: 20.0°C, NO ICE, #1

DISTRIBUTION: WHITE - Returned to Client with Report; CANARY - Stays with the Sample; PINK - Field Copy

Chain of Custody Record

TAL-4124 (1007)

Temperature on Receipt _____

Drinking Water? Yes☐ No☐

TestAmerica

THE LEADER IN ENVIRONMENTAL TESTING

Client: USACE	Project Manager: STEVEN COSPER	Date:	Chain of Custody Number: 284253
Address:	Telephone Number (Area Code)/Fax Number:	Lab Number:	Page 2 of 2
City: / State: / Zip Code:	Site Contact:	Lab Contact: B FISCHER	
Project Name and Location (State): * 12846	Carrier/Waybill Number:		
Contract/Purchase Order/Quote No.:			

Analysis (Attach list if more space is needed)

Sample I.D. No. and Description (Containers for each sample may be combined on one line)	Date	Time	Matrix: Air	Aqueous	Sludge	Soil	Containers & Preservatives: Unpres.	H2SO4	HNO3	HCl	NaOH	ZnAc/NaOH	Special Instructions/ Conditions of Receipt
													19467
P-01-051315-1530													POLISHER
OS-01-031815-1530													SCRUBBING OIL
OS-01-042415-1600													↓
OS-01-042815-1600													
OS-01-050715-1630													↓
P-01-101514-0910													POLISHER / LIQUOR
P-01-100814-1120													
P-01-013015-0915													↓
P-01-040115-1600													
OS-01-101514-0910													QUENCH OIL
P-01-012215-0948													INITIAL
WW-01-031315-1531													WW

Possible Hazard Identification: ☐ Non-Hazard ☐ Flammable ☐ Skin Irritant ☐ Poison B ☐ Unknown

Sample Disposal: ☐ Return To Client ☐ Disposal By Lab ☐ Archive For _____ Months (A fee may be assessed if samples are retained longer than 1 month)

Turn Around Time Required: ☐ 24 Hours ☐ 48 Hours ☐ 7 Days ☐ 14 Days ☐ 21 Days ☐ Other _____

QC Requirements (Specify)

	Date	Time		Date	Time
1. Relinquished By			1. Received By: TABUFFASCO	10/20/15	0920
2. Relinquished By			2. Received By		
3. Relinquished By			3. Received By		

Comments: 20.0°C, NO ICE, #1

DISTRIBUTION: WHITE - Returned to Client with Report; CANARY - Stays with the Sample; PINK - Field Copy

TSS-100814-01	8/Oct/2014	SERDP Long Term Mix	Final Polisher Liquid Sampl	P-02-100814-1537								
TSS-100814-01	8/Oct/2014	SERDP Long Term Mix	Final Quencher Oil Sample	OS-02-100814-1535	$ 65.00	$ 65.00						
TSS-100814-01	8/Oct/2014	SERDP Long Term Mix	Initial Quencher Oil Sample	OS-01-100814-1030	$ 65.00	$ 65.00						
TSS-100814-01	8/Oct/2014	SERDP Long Term Mix	Initinal Polisher Liquid Sar	P-01-100814-1120				$100.75				
TSS-101514-01	15/Oct/2014	SERDP Long Term Mix	Polisher Liquid Sample	P-01-101514-0910				$100.75				
TSS-111314-01	13/Nov/2014	SERDP Long Term Mix	Polisher Liquid Sample	P-01-111314-1622	$ 65.00	$ 65.00						
TSS-012215-01	22/Jan/2015	SERDP Long Term Mix	Polisher Liquid Sample	P-01-012215-0948								$ 50.35
TSS-013015-01	30/Jan/2015	SERDP Long Term Mix	Polisher Liquid Sample	P-01-013015-0915				$100.75				
TSS-030415-01	4/Mar/2015	SERDP 100% Construction M	Polisher Liquid Sample	P-01-030415-1545								
TSS-030515-01	5/Mar/2015	SERDP 50% Plastics Mix	Polisher Liquid Sample	P-01-030515-1557				$100.75				
TSS-031115-01	11/Mar/2015	SERDP 50% Food Mix	Polisher Liquid Sample	P-01-031115-1520	$ 65.00	$ 65.00						
TSS-031315-01	13/Mar/2015	SERDP 33% POL Mix	Polisher Liquid Sample	P-01-031315-1531								$ 50.35
TSS-031815-01	18/Mar/2015	SERDP 40% Tires Mix	Polisher Liquid Sample	P-01-031815-1426								
TSS-031915-01	19/Mar/2015	SERDP Long Term Mix	Polisher Liquid Sample	P-01-031915-1600								
TSS-040115-01	1/Apr/2015	SERDP Long Term Mix	Polisher Liquid Sample	P-01-040115-1600								$ 50.35
TSS-040215-01	2/Apr/2015	SERDP 100% Construction M	Polisher Liquid Sample	P-01-040215-1505								
TSS-041415-01	14/Apr/2015	SERDP 40% Tires Mix	Polisher Liquid Sample	P-01-041415-1640								
TSS-042315-01	23/Apr/2015	SERDP 50% Food Mix	Polisher Liquid Sample	P-01-042315-1605								
TSS-042415-01	24/Apr/2015	SERDP 33% POL Mix	Polisher Liquid Sample	P-01-042415-1600								
TSS-042715-01	27/Apr/2015	SERDP Long Term Mix	Polisher Liquid Sample	P-01-042715-1538	$ 65.00	$ 65.00						
TSS-042815-01	28/Apr/2015	SERDP Long Term Mix	Polisher Liquid Sample	P-01-042815-1600								
TSS-050615-01	6/May/2015	SERDP Long Term Mix	Polisher Liquid Sample	P-01-050615-1552								$ 50.35
TSS-050715-01	7/May/2015	SERDP Long Term Mix	Polisher Liquid Sample	P-01-050715-1600								
TSS-050815-01	8/May/2015	SERDP Long Term Mix	Polisher Liquid Sample	P-01-050815-1600	$ 65.00	$ 65.00						
TSS-051315-01	13/May/2015	SERDP Long Term Mix	Polisher Liquid Sample	P-01-051315-1530				$100.75				
TSS-052015-01	20/May/2015	SERDP Long Term Mix	Polisher Liquid Sample	P-01-052015-1500	$ 65.00	$ 65.00		-				
TSS-052115-01	21/May/2015	SERDP Long Term Mix	Polisher Oil Sample	P-01-052115-1430								
TSS-101514-01	15/Oct/2014	SERDP Long Term Mix	Quencher Oil Sample	OS-01-101514-0910					$110.83			
TSS-012215-01	22/Jan/2015	SERDP Long Term Mix	Quencher Oil Sample	OS-01-012215-0948	$ 65.00	$ 65.00						
TSS-013015-01	30/Jan/2015	SERDP Long Term Mix	Quencher Oil Sample	OS-01-013015-0915								
TSS-030415-01	4/Mar/2015	SERDP 100% Construction M	Quencher Oil Sample	OS-01-030415-1545	$ 65.00	$ 65.00						
TSS-030515-01	5/Mar/2015	SERDP 50% Plastics Mix	Quencher Oil Sample	OS-01-030515-1557	$ 65.00	$ 65.00						
TSS-031115-01	11/Mar/2015	SERDP 50% Food Mix	Quencher Oil Sample	OS-01-031115-1520	$ 65.00	$ 65.00						
TSS-031315-01	13/Mar/2015	SERDP 33% POL Mix	Quencher Oil Sample	OS-01-031315-1531	$ 65.00	$ 65.00						
TSS-031815-01	18/Mar/2015	SERDP 40% Tires Mix	Quencher Oil Sample	OS-01-031815-1530					$110.83			
TSS-031915-01	19/Mar/2015	SERDP Long Term Mix	Quencher Oil Sample	OS-01-031915-1600								
TSS-040115-01	1/Apr/2015	SERDP Long Term Mix	Quencher Oil Sample	OS-01-040115-1600								
TSS-040215-01	2/Apr/2015	SERDP 100% Construction M	Quencher Oil Sample	OS-01-040215-1510								
TSS-041415-01	14/Apr/2015	SERDP 40% Tires Mix	Quencher Oil Sample	OS-01-041415-1640								
TSS-042315-01	23/Apr/2015	SERDP 50% Food Mix	Quencher Oil Sample	OS-01-042315-1605								
TSS-042415-01	24/Apr/2015	SERDP 33% POL Mix	Quencher Oil Sample	OS-01-042415-1600					$110.83			
TSS-042715-01	27/Apr/2015	SERDP Long Term Mix	Quencher Oil Sample	OS-01-042715-1538	$ 65.00	$ 65.00						
TSS-042815-01	28/Apr/2015	SERDP Long Term Mix	Quencher Oil Sample	OS-01-042815-1600					$110.83			
TSS-050615-01	6/May/2015	SERDP Long Term Mix	Quencher Oil Sample	OS-01-050615-1700	$ 65.00	$ 65.00						
TSS-050715-01	7/May/2015	SERDP Long Term Mix	Quencher Oil Sample	OS-01-050715-1630					$110.83			
TSS-052015-01	20/May/2015	SERDP Long Term Mix	Quencher Oil Sample	OS-01-052015-1500	$ 65.00	$ 65.00						
TOTALS					$ 1,235.00	$ 1,235.00	$ -	$906.75	$554.15	$ 241.80	$282.12	$ 503.50

Test Specification	Date	Feedstock	Sample Type	Sample I.D.	ALS Diesel Range Organics by GC - 8015B	ALS Gasoline Range Organics by GC - 8015B	ALS Prox and Ult	TA PAH CW12	TA PAH SW13	TA TCLP metals SW57	TA RCRA metals SW59	TA BTEX SW18
TSS-111314-01	13/Nov/2014	SERDP Long Term Mix	Ash Sample	A-01-111314-1622								
TSS-012215-01	22/Jan/2015	SERDP Long Term Mix	Ash Sample	A-01-012215-1800								
TSS-012915-01	29/Jan/2015	SERDP Long Term Mix	Ash Sample	A-01-012915-1800								
TSS-013015-01	30/Jan/2015	SERDP Long Term Mix	Ash Sample	A-01-013015-1600								
TSS-020415-01	4/Feb/2015	SERDP Long Term Mix	Ash Sample	A-01-020415-1600								
TSS-021915-01	19/Feb/2015	SERDP Long Term Mix	Ash Sample	A-01-021915-1600						$ 60.45	$ 70.53	
TSS-030415-01	4/Mar/2015	SERDP 100% Construction Mi	Ash Sample	A-01-030415-1545								
TSS-030515-01	5/Mar/2015	SERDP 50% Plastics Mix	Ash Sample	A-01-030515-1557								
TSS-031115-01	11/Mar/2015	SERDP 50% Food Mix	Ash Sample	A-01-031115-1520								
TSS-031315-01	13/Mar/2015	SERDP 33% POL Mix	Ash Sample	A-01-031315-1531								
TSS-031815-01	18/Mar/2015	SERDP 40% Tires Mix	Ash Sample	A-01-031815-1426								
TSS-031915-01	19/Mar/2015	SERDP Long Term Mix	Ash Sample	A-01-031915-1600						$ 60.45	$ 70.53	
TSS-040115-01	1/Apr/2015	SERDP Long Term Mix	Ash Sample	A-01-040115-1600								
TSS-040215-01	2/Apr/2015	SERDP 100% Construction Mi	Ash Sample	A-01-040215-1505						$ 60.45	$ 70.53	
TSS-041415-01	14/Apr/2015	SERDP 40% Tires Mix	Ash Sample	A-01-041415-1640								
TSS-042315-01	23/Apr/2015	SERDP 50% Food Mix	Ash Sample	A-01-042315-1605								
TSS-042415-01	24/Apr/2015	SERDP 33% POL Mix	Ash Sample	A-01-042415-1600								
TSS-042715-01	27/Apr/2015	SERDP Long Term Mix	Ash Sample	A-01-042715-1538								
TSS-042815-01	28/Apr/2015	SERDP Long Term Mix	Ash Sample	A-01-042815-1600								
TSS-050715-01	7/May/2015	SERDP Long Term Mix	Ash Sample	A-01-050715-1600								
TSS-050815-01	8/May/2015	SERDP Long Term Mix	Ash Sample	A-01-050815-1600						$ 60.45	$ 70.53	
TSS-051315-01	13/May/2015	SERDP Long Term Mix	Ash Sample	A-01-051315-1530								
TSS-052015-01	20/May/2015	SERDP Long Term Mix	Ash Sample	A-01-052015-1500								
TSS-052115-01	21/May/2015	SERDP Long Term Mix	Ash Sample	A-01-052115-1430								
TSS-100814-01	8/Oct/2014	SERDP Long Term Mix	Ash Sample 1	A-01-100814-1525								
TSS-100814-01	8/Oct/2014	SERDP Long Term Mix	Ash Sample 2	A-02-100814-1526								
TSS-101514-01	15/Oct/2014	SERDP Long Term Mix	Condensate Sample	WW-01-101514-1120								$ 50.35
TSS-013015-01	30/Jan/2015	SERDP Long Term Mix	Condensate Sample	WW-01-013015-1400	$ 65.00	$ 65.00						
TSS-030415-01	4/Mar/2015	SERDP 100% Construction Mi	Condensate Sample	WW-01-030415-1545								
TSS-031315-01	13/Mar/2015	SERDP 33% POL Mix	Condensate Sample	WW-01-031315-1531								$ 50.35
TSS-031815-01	18/Mar/2015	SERDP 40% Tires Mix	Condensate Sample	WW-01-031815-1426	$ 65.00	$ 65.00						
TSS-031915-01	19/Mar/2015	SERDP Long Term Mix	Condensate Sample	WW-01-031915-1600								$ 50.35
TSS-040115-01	1/Apr/2015	SERDP Long Term Mix	Condensate Sample	WW-01-040115-1600	$ 65.00	$ 65.00						
TSS-040215-01	2/Apr/2015	SERDP 100% Construction Mi	Condensate Sample	WW-01-040215-1505								
TSS-041415-01	14/Apr/2015	SERDP 40% Tires Mix	Condensate Sample	WW-01-041415-1640								$ 50.35
TSS-042315-01	23/Apr/2015	SERDP 50% Food Mix	Condensate Sample	WW-01-042315-1605								
TSS-042415-01	24/Apr/2015	SERDP 33% POL Mix	Condensate Sample	WW-01-042415-1600								
TSS-042715-01	27/Apr/2015	SERDP Long Term Mix	Condensate Sample	WW-01-042715-1538								
TSS-042815-01	28/Apr/2015	SERDP Long Term Mix	Condensate Sample	WW-01-042815-1600				$100.75				
TSS-050615-01	6/May/2015	SERDP Long Term Mix	Condensate Sample	WW-01-050615-1552								$ 50.35
TSS-050715-01	7/May/2015	SERDP Long Term Mix	Condensate Sample	WW-01-050715-1600				$100.75				
TSS-050815-01	8/May/2015	SERDP Long Term Mix	Condensate Sample	WW-01-050815-1600								
TSS-051315-01	13/May/2015	SERDP Long Term Mix	Condensate Sample	WW-01-051315-1530								
TSS-052015-01	20/May/2015	SERDP Long Term Mix	Condensate Sample	WW-01-052015-1500								$ 50.35
TSS-052115-01	21/May/2015	SERDP Long Term Mix	Condensate Sample	WW-01-052115-1430								
TSS-031115-01	11/Mar/2015	SERDP 50% Food Mix	Condensate Sample	WW-01-031115-1520								
TSS-100814-01	8/Oct/2014	SERDP Long Term Mix	Condensate Sample 1	WW-01-100814-1315	$ 65.00	$ 65.00						
TSS-030515-01	5/Mar/2015	SERDP 50% Plastics Mix	Condensate Sample 1	WW-01-030515-1352				$100.75				
TSS-100814-01	8/Oct/2014	SERDP Long Term Mix	Condensate Sample 2	WW-02-100814-1335								
TSS-030515-01	5/Mar/2015	SERDP 50% Plastics Mix	Condensate Sample 2	WW-02-030515-1557				$100.75				
TSS-100814-01	8/Oct/2014	SERDP Long Term Mix	Condensate Sample 3	WW-03-100814-1443								
TSS-100814-01	8/Oct/2014	SERDP Long Term Mix	Condensate Sample 4	WW-04-100814-1523								

Login Sample Receipt Checklist

Client: U.S. Army Construction Engineering Resea

Job Number: 480-89467-1

Login Number: 89467
List Number: 1
Creator: Kinecki, Kenneth P

List Source: TestAmerica Buffalo

Question	Answer	Comment
Radioactivity either was not measured or, if measured, is at or below background	True	
The cooler's custody seal, if present, is intact.	True	
The cooler or samples do not appear to have been compromised or tampered with.	True	
Samples were received on ice.	False	
Cooler Temperature is acceptable.	False	
Cooler Temperature is recorded.	True	
COC is present.	True	Filled out by TA Buffalo personnel
COC is filled out in ink and legible.	True	
COC is filled out with all pertinent information.	True	
Is the Field Sampler's name present on COC?	False	
There are no discrepancies between the sample IDs on the containers and the COC.	True	
Samples are received within Holding Time.	False	
Sample containers have legible labels.	True	
Containers are not broken or leaking.	True	
Sample collection date/times are provided.	True	
Appropriate sample containers are used.	False	Canning Jars
Sample bottles are completely filled.	False	
Sample Preservation Verified	True	
There is sufficient vol. for all requested analyses, incl. any requested MS/MSDs	True	
VOA sample vials do not have headspace or bubble is <6mm (1/4") in diameter.	True	All containers have headspace
If necessary, staff have been informed of any short hold time or quick TAT needs	True	
Multiphasic samples are not present.	True	
Samples do not require splitting or compositing.	True	
Sampling Company provided.	True	USACE
Samples received within 48 hours of sampling.	True	
Samples requiring field filtration have been filtered in the field.	N/A	
Chlorine Residual checked.	N/A	

Appendix H: Diesel Engine Disassembly and Inspection Report

Rotary Kiln Gasification of Solid Waste for Base Camps

SERDP Project Number WP-2211

Diesel Engine Disassembly and Inspection Report

July 2015

Table of Contents:

Executive Summary……..……..……..3

Summary of Engine Clock Hours……3

Introduction…….……4

Engine Removal, Disassembly, Rebuild, and Re-Install.....6

Engine Data……..9

Work Summary……9

Appendix A- Compression Test Results……11

Appendix B- Engine Specifications and Disassembly Measurements……..……13

Appendix C- Photo Documentation……...27

Appendix D - *Oil Scan* Oil Analysis…….….44

Appendix E - Engine Measurement Specifications and Procedures……..45

Appendix F - Replacement Parts and Receipt……...61

THIS PAGE INTENTIONALLY LEFT BLANK

Executive Summary

A 60 kW electrical power generator was used for all test runs and was driven by a John Deere 5030HF270 diesel engine. This engine was disassembled at the conclusion of testing, inspected, cleaned, and reassembled to factory rebuilt condition in July 2015. The engine had 480.8 hours on the engine run clock at the time of disassembly. The majority of this time (470.8 hours) was run dual fueled on waste derived synthetic gas.

The engine was in surprisingly good condition. The engine performance was tested prior to disassembly and was found to produce full rated power. Each cylinder was within the rated compression pressure specification and the critical internal engine components were found to be within factory specifications. A sample of the crankcase oil was analyzed and was found to be within normal tolerances (see appendix D).

Significant observations include the following:

1. Carbon build up was observed on the intake valve stems (attributed to excessive cooling of syngas by cold intake air during winter operations).
2. Slight wear was observed on the valve guides (attributed to carbon build-up).
3. Slight pitting on exhaust valves (attributed to high moisture content in syngas fuel).
4. Slight impression on cylinder #1 piston (attributed to foreign object passing through engine).
5. Scouring on cylinder #5 piston (attributed to overheating during early trials).
6. Metal shavings were found in the crankcase oil pan directly under the turbo charger oil drain (attributed to aspirating syngas through the turbo charger compressor).

Summary of Engine Clock Hours

- Hours – 0 to 10 – Initial break in and load center debug.
- Hours 10 to 248.6 hours – DoD III system development and run testing – dual fueled on syngas. Engine overheated and stopped during this testing. Not part of SERDP, but engine was operated on syngas for these clock hours prior to the disassembly inspection at 480.8 hours.
- Hours – 248.6 to 480.8 hours – SERDP run testing on the composite mixes – Total operating hours for SERDP mixes dual fueled on syngas 232.2 hours.
- Hour = 480.8 hours – Engine was removed from generator housing, disassembled, inspected, and reassembled. Engine was rebuilt to new condition.
- Hours - 480.8 to 485 hours – Engine operated on 100% diesel fuel – debug and break in.
- Hours – 485 to 496.3 hours – Engine operated an additional 11.3 hours on syngas using SERDP standard mix.

Total hours operating on SERDP mixes = 243.5 hours.

Total hours operating dual fueled on waste derived syngas prior to disassembly = 470.8 hours.

Total hours operating dual fueled on waste derived syngas = 482.1 hours.

Introduction:

All SERDP run testing was conducted using a 60 kW diesel engine driven generator that was packaged by Central Maine Diesel. The generator is equipped with a John Deere 5030HF270 diesel engine rated for generator drive service. The engine has a prime crankshaft power rating of 87 brake horsepower, providing enough power to generate a maximum of 53 kW.

The engine is equipped with a precision mechanical governor that maintains the crankshaft speed at a constant synchronous speed of 1800 rpm. The engine also has an auxiliary power take off that is located on the right hand side of the engine. This power take off was used to drive a hydraulic gear pump rated for a constant displacement of 21.9 gallon per minute at 1500 psig (22.7 BHP at 85% efficiency). This pump provides the power to operate the gasification system components, including the hydraulically driven reactor rotary drive, main aspiration blower, and polisher pump.

The entire gasification system is controlled by a 24 VDC automation system. Power to operate this system is provided by the battery charging system and the engine alternator. The total power to drive the alternator and radiator cooling fan was 5.8 BHP. The total loss of crankshaft power is 28.5 BHP, which includes the hydraulic gear pump operating by the power take-off. The maximum amount of electrical power the generator can provide is 40.4 kW at 100% prime rated crankshaft power. Sustained operation at this level was not possible and the engine consistently overheated due to overloading. Lugging at this load also occurred when operating on low quality winter mix fuel (low heating value) during winter months.

SERDP hot tests were conducted at various electrical loads between 20 kW (67% of maximum prime rated crankshaft power) and 30 kW (84% of maximum prime rated crankshaft power). The majority of tests were conducted at 25 kW, which loaded the engine at 75% of maximum rated crankshaft power and provided reliable operation. The stated electrical loads are net available usable power that was consumed by a 3 phase 480 VAC load bank.

One significant problem observed during testing was the engine was too small for the gasifier. An engine with at least 50% more horsepower could have been used to achieve the full 60 kW usable electrical power output. The gas flow from the gasifier had to be reduced to match the fueling needs of the generator. 60 kW Tactical Quiet Generating Sets have an engine power rating of at least 135 BHP (55% power increase over engine tested) to allow full power output under all operating conditions (such as high elevation and 50 Hz).

SERDP hot testing on the waste mixes continued throughout the winter, spring, and early summer of 2015. The intent was to maximize the engine run time prior to the loss of funding. The engine was subjected to brutal weather conditions. A significant amount of testing was conducted in the winter, where ambient temperatures varied between -15 and 20 degrees F, with high winds (25 MPH) and blowing snow. Testing also occurred during the summer months, where the ambient temperatures were in excess of 90 degrees F. Operations were conducted in every foreseeable weather condition, including downpours, electrical storms, high winds, ice,

and snow storms.

The engine was removed from the generator housing and was disassembled in July 2015. SUNY Cobleskill's Agricultural Engineering Department, at Curtis Mott Hall has completed the disassembly, inspection, and rebuild of this engine at their facility. A total of 480.8 hours of performance testing was accumulated on the engine. During run time, the engine was fueled with both low sulfur diesel and a synthetic gas (syngas) produced by gasification of various base camp waste mixes.

On average, the engine was operated between 50% and 65% gaseous fueling rate, with the balance provided by liquid low sulfur diesel fuel (as determined on a low heating value basis). The engine operated normal, reliably, and provided full power at less than 65% gaseous fueling rate. The engine was operated for short terms at 79% gaseous fueling rate (79% reduction in liquid fuel consumption), but required intensive monitoring and supervision. High engine knock was also observed.

Increasing the gaseous fueling rate into the engine increases the crankshaft speed. The engine speed control governor reduces the rate of liquid fuel injection to maintain the synchronous speed of 1800 RPM. The energy value of the syngas fuel can vary as the raw feedstock tumbles within the reactor. Researchers feel sustained operation above 65% gaseous fueling rate is not reliable due to the significant risk of a crash stop if the engine speed governor completely stops the liquid fuel injection rate in the event the syngas heating value suddenly increases.

The engine was also intentionally subjected to an exceptionally high amount of moisture within the syngas. Researchers determined a method to reduce or eliminate the production condensate water by raising the syngas temperature and allowing full evaporation into the syngas stream. Saturated syngas was re-heated to about 20 degrees higher than the saturation temperature. Tests conducted after March 15th, 2015 focused on testing this method of condensate water disposal. The water evaporates into the syngas stream and combusts as superheated steam within the engine. No significant change in engine performance was observed, other than an increase in visible diesel particulate matter in the exhaust due to oxygen deprivation. The only adverse indication within the engine due to this moisture was slight pitting was observed on the seat contact area of exhaust valve.

The syngas was mixed with the aspiration air upstream of the turbo charger compressor. This configuration forced a mixture of syngas and air to pass through the turbo compressor, pass through the charge air cooler, and then to the intake manifold. No carbon or tar build-up was observed in the syngas piping upstream of the mix point, but a build-up was observed at the mix point and all points downstream. The build-up occurred only on cool surfaces (no accumulation on the turbo compressor blades) and was not a problem during operations. The main problem was the build-up restricted turbo rotation and required daily cleaning. Mechanical damage to the turbo occurred during cleaning, which resulted in noticeable metal debris accumulating in the oil pan directly under the turbo oil drain. This configuration would never be used again due to these problems. The syngas pressure would be boosted separately and fed directly into the intake manifold downstream of the turbo charger and charge air cooler.

Engine Removal, Disassembly, Rebuild, and Re-Install

The engine was removed on July 16th, 2015. Disassembly commenced shortly after. Any abnormal wear and deposits found during disassembly will be noted along with all applicable component measurements and photos. The engine was assembled and installed back into the GENSET on August 3rd, 2015.

Photo Documentation – Engine Removal from GENSET

Engine Removal from GENSET Continued..

Photo Documentation – Reassembly of Engine to GENSET August 3rd, 2015

Reassembly of Engine to GENSET Continued..

CAT

Engine Data:

Make: **John Deere**

Model: **5030HF270**

Serial No.: **PE5030H191337**

Displacement: **3.05 Liters**

No. of Cylinders: **5**

No. of Valves: **10**

Fuel Rate (prime rating):

Engine % Load	Crankshaft Brake Horsepower	Fuel Consumption lb/hr	Fuel Consumption gal/hr
25%	21.8	7.9	1.11
50%	43.5	15.9	2.24
75%	65.3	23.8	3.35
100%	87	31.7	4.46

Work Summary:

1. Engine received and information was documented
2. Engine oil sample was taken for Oil Scan analysis
3. Compression test completed on 5 of 5 cylinders (dry)
    a. Wet compression test was not required since compression was within allowance.
4. External component removal
    a. Fuel pump and filter
    b. Alternator
    c. Muffler
    d. Turbocharger
    e. Starting system
5. Valve cover removal
6. Injector removal
7. Valve lash verification
8. Head removal
9. Valve train removal
    a. Valve train component inspection
10. Oil Pan Removal

11. Piston and connecting rod removal
    a. Piston inspection
    b. Connecting rod wear evaluation
12. Cylinder wear evaluation
13. Crank removal
    a. Crank wear evaluation
    b. Crankshaft main and connecting rod running clearance
14. Cam removal
    a. Cam wear evaluation

Appendix A- Compression Test Results

Cylinder Compression Test

Specification
Engine Compression Pressure: 345 - 405 PSI Maximum Difference Between Cylinders: 50 PSI

Cylinder	Compression (PSI)
1	375
2	380
3	385
4	395
5	385

Remarks:

The tested compression of each cylinder was within specified range. A wet compression test using oil was not necessary.

Photo Documentation of Compression Test

A-1 Compression Testing Equipment

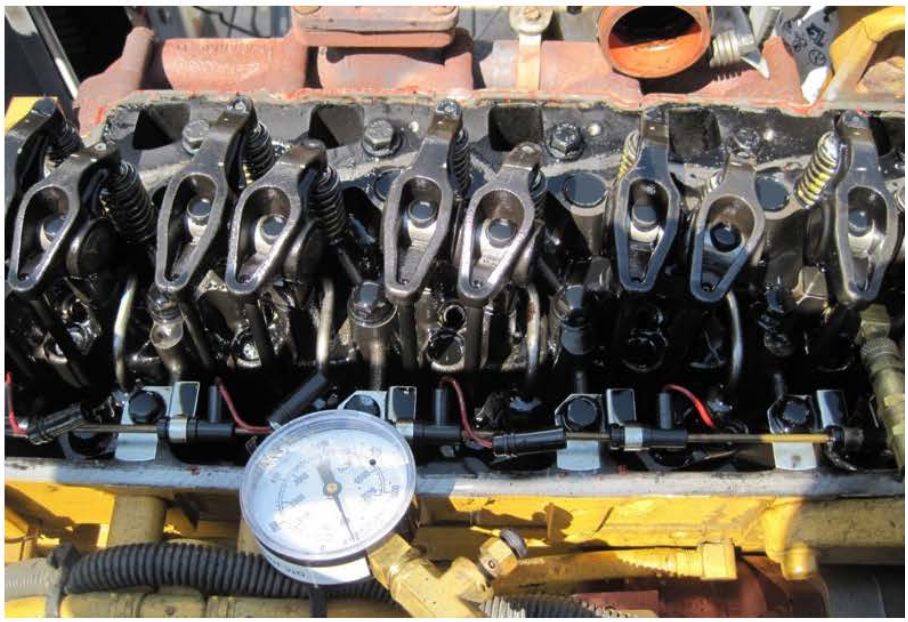

A-2 Compression Test on Cylinder 1

Appendix B: Engine Specifications and Disassembly Measurements:

Cylinder Bore

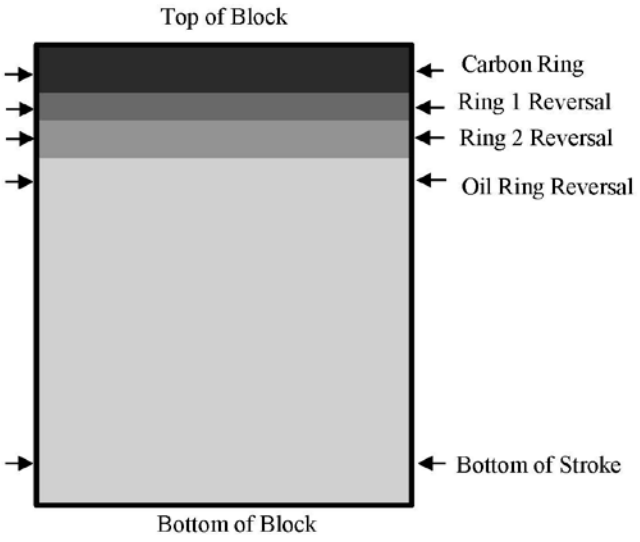

Cylinder Bore

Specification
Standard Bore Inside Diameter (Inches): 3.385 – 3.386

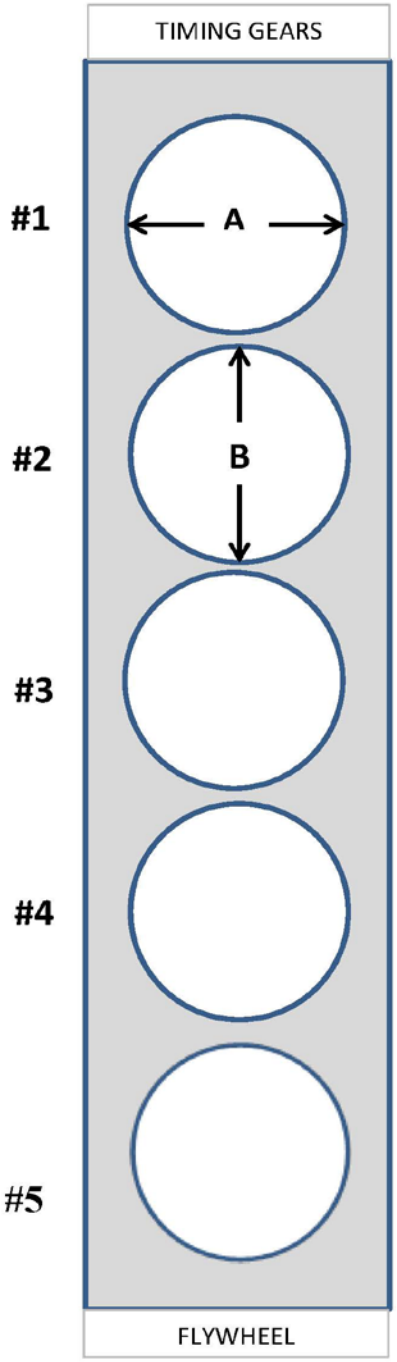

	Position:	A (Inches)	B (Inches)
Cylinder 1	CR	3.3850	3.3860
	R1	3.3860	3.3865
	R2	3.3860	3.3865
	OR	3.3860	3.3865
	BCD	3.3860	3.3865
Cylinder 2	CR	3.3860	3.3860
	R1	3.3860	3.3865
	R2	3.3865	3.3865
	OR	3.3865	3.3865
	BCD	3.3865	3.3865
Cylinder 3	CR	3.3860	3.3860
	R1	3.3865	3.3865
	R2	3.3865	3.3865
	OR	3.3865	3.3865
	BCD	3.3870	3.3870
Cylinder 4	CR	3.3860	3.3865
	R1	3.3865	3.3865
	R2	3.3865	3.3865
	OR	3.3865	3.3865
	BCD	3.3865	3.3870
Cylinder 5	CR	3.3860	3.3860
	R1	3.3865	3.3870
	R2	3.3865	3.3870
	OR	3.3865	3.3870
	BCD	3.3865	3.3875

Piston Skirt Diameter

Specification
Piston O.D. Wear Limit (Inches): 3.381 - 3.382

The piston skirt diameter was taken 0.5 inches from the bottom of the piston.

Position	Diameter (Inches)
Cylinder 1	3.382
Cylinder 2	3.382
Cylinder 3	3.382
Cylinder 4	3.382
Cylinder 5	3.382

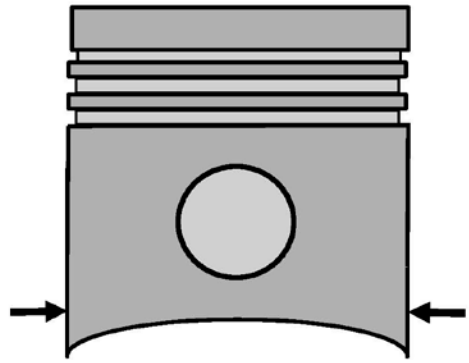

Piston Skirt Running Clearance

Piston skirt running clearances are calculated by the following equation:

(Ring 1 Inside Diameter) – (Piston Skirt Outside Diameter) = Piston Skirt Running Clearance

Position	Running Clearance (Inches)
Cylinder 1	0.0040
Cylinder 2	0.0040
Cylinder 3	0.0045
Cylinder 4	0.0045
Cylinder 5	0.0045

Specification
Piston Skirt Running Clearance (Inches): 0.003 - 0.005

Remarks:

The piston O.D. wear limit and running clearance were within specification. Recorded piston skirt measurement for cylinder 5 was not taken over the scoring marks, but over an average wear portion of the skirt. A measurement of the diameter of cylinder 5 piston was taken over the damaged area right under the oil ring. The resulted diameter was 3.375 inches, about 7 thousandths smaller than the specified wear limit.

Ring Side Clearance

Specification
First Ring: Ring-to-Groove Clearance - 0.005 Inches
Second Ring: Ring-to-Groove Clearance - 0.004 Inches
Oil Ring: Ring-to-Groove Clearance - 0.004 Inches

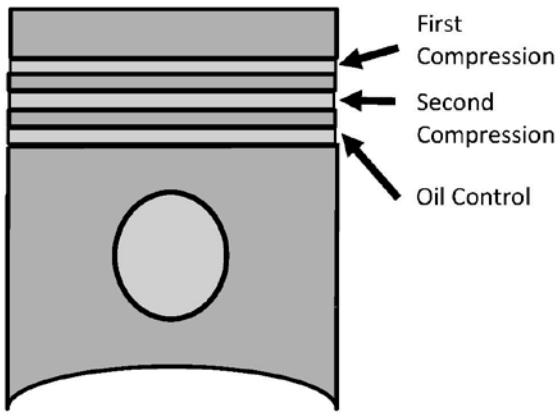

Cylinder	Ring Position	Side Clearance (Inches)
1	Top Compression	> .004 ; < .005
	Second Compression	~ .002
	Oil Control	~ .002
2	Top Compression	> .004 ; < .005
	Second Compression	~ .002
	Oil Control	~ .0025
3	Top Compression	> .004 ; < .005
	Second Compression	~ .002
	Oil Control	~ .0025
4	Top Compression	> .004 ; < .005
	Second Compression	~ .002
	Oil Control	~ .0025
5	Top Compression	> .004 ; < .005
	Second Compression	~ .002
	Oil Control	~ .003

Remarks:

The ring side clearance for the first, second, and oil ring were all slightly under specification. This may be from carbon build up. The rings were free in the groove and gave good compression.

Piston Pin Bore, Inside Diameter

Specification
Wear Limit: 1.1812 - 1.1815 Inches

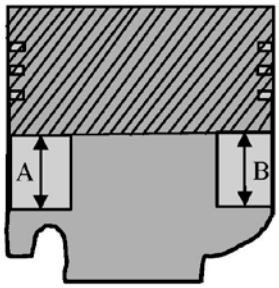

Pin Bore from Cylinder #	A (Inches)		B (Inches)	
	X	Y	X	Y
1	1.1800	1.1800	1.1800	1.1800
2	1.1815	1.1815	1.1815	1.1815
3	1.1820	1.1820	1.1815	1.1820
4	1.1820	1.1820	1.1820	1.1820
5	1.1830	1.1825	1.1825	1.1825

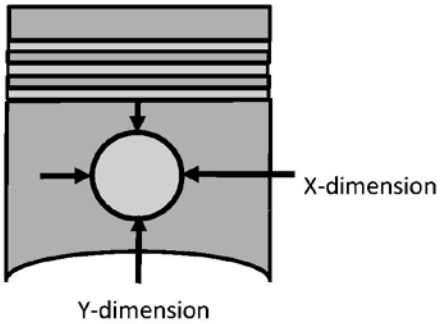

Connecting Rod Piston Pin Bearing Bore

Specification
Wear Limit: 1.1812 – 1.1815 Inches

Connecting Rod from Cylinder #	A (Inches)	
	X	Y
1	1.1820	1.1820
2	1.1820	1.1820
3	1.1820	1.1815
4	1.1820	1.1825
5	1.1820	1.1820

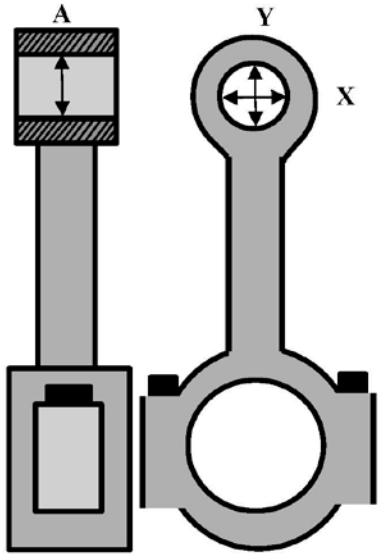

Piston Pin

Specification
Wear Limit: 1.1809 - 1.1811 Inches

Pin From Cylinder #	A (Inches)	B (Inches)	C (Inches)
1	1.1815	1.1810	1.1815
2	1.1815	1.1810	1.1815
3	1.1815	1.1810	1.1815
4	1.1810	1.1810	1.1810
5	1.1815	1.1810	1.1815

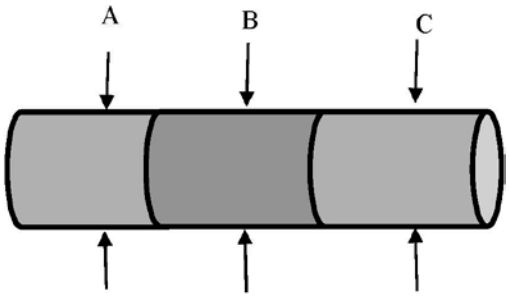

Crankshaft Main Journal Outside Diameter

Specification
Journal Outside Diameter: 2.9522 – 2.9533 Inches

Position	X (Inches)	Y (Inches)
M1	2.953	2.953
M2	2.953	2.953
M3	2.953	2.953
M4	2.953	2.953
M5	2.953	2.953
M6	2.953	2.953

Remarks:

There was no measureable wear on the crankshaft. Minor scratches were observed on the journal surface, but this wear is typical for an engine with 480 hours.

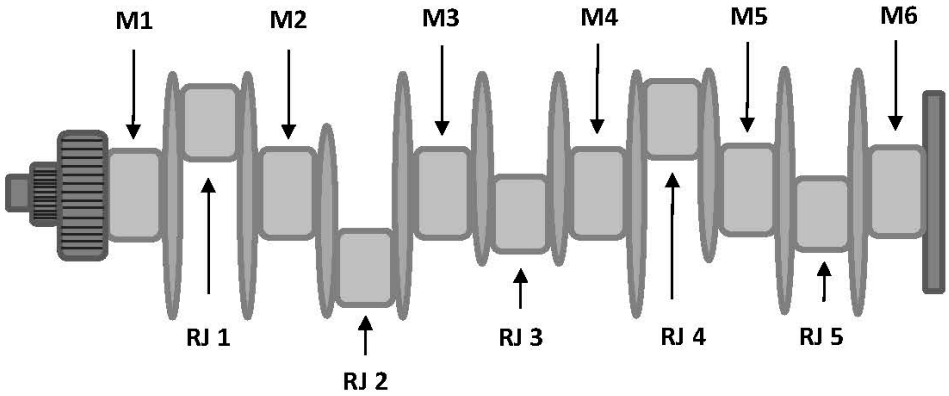

<u>Journal Crankshaft Connecting Rod Outside Diameter</u>

Specification
Connecting Rod Journal Outside Diameter: 2.36170 – 2.36270 Inches

Position	X	Y
Cylinder 1	2.3655	2.3655
Cylinder 2	2.3630	2.3630
Cylinder 3	2.3625	2.3625
Cylinder 4	2.3630	2.3630
Cylinder 5	2.3625	2.3625

Remarks:

There was a slight difference in size between rods. Minimal wear and scratches were observed on the main journals. Minor polishing was required for rebuild.

Cam Shaft Journal Outside Diameters

Specification
Cam Shaft Journal O.D. : 2.3617 – 2.3627 Inches

Journal	Position	X	Y
J1	A	2.3625	2.3625
J2	A	2.3625	2.3625
J3	A	2.3625	2.3625
J4	A	2.3625	2.3625
J5	A	2.3625	2.3625

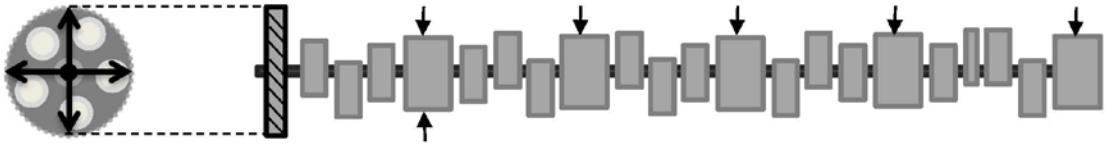

Cam Bearing and Parent Bores

Specification
Cam Bearing and Parent Bores Clearance: 2.3642 – 2.3672 Inches

Bearing and Bores	X	Y
J1	2.3650	2.3650
J2	2.3640	2.3640
J3	2.3650	2.3650
J4	2.3650	2.3650
J5	2.3650	2.3645

Remarks:

Minimal wear, cam shaft journals did not have abnormal wear for the hours. All measurements were within specification.

Cam Lobes

Specifications
Cam Lobe Height: 0.278 – 0.288 Inches

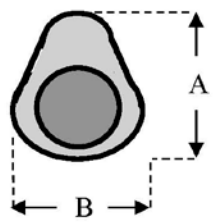

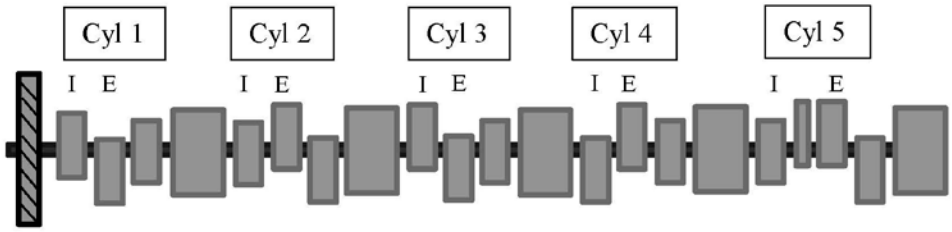

Journal	Position	A	B	Lobe Height (A-B)
Cyl 1	I	2.0480	1.811	0.2370
	E	2.0500	1.811	0.2390
Cyl 2	I	2.0495	1.811	0.2385
	E	2.0500	1.809	0.2410
Cyl 3	I	2.0475	1.808	0.2395
	E	2.0490	1.809	0.2400
Cyl 4	I	2.0465	1.808	0.2385
	E	2.0480	1.808	0.2400
Cyl 5	I	2.0420	1.804	0.2380
	E	2.0460	1.803	0.2430

Remarks:

The cam lobes did not look worn, but did not meet specifications. The measurement specifications provided may not be valid. No abnormal wear was observed on cams lobes. The lobes may have been undersized from the factory.

Cam Follower Stem O.D.

Specification:
Wear limit: 0.8422 – 0.8427 Inches

Cylinder	Valve Type	Position on Stem	Diameter (Inches)
1	Intake	A	0.842
		B	0.842
2	Intake	A	0.842
		B	0.842
3	Intake	A	0.842
		B	0.842
4	Intake	A	0.842
		B	0.842
5	Intake	A	0.842
		B	0.842

Cylinder	Valve Type	Position on Stem	Diameter (Inches)
1	Exhaust	A	0.842
		B	0.842
2	Exhaust	A	0.842
		B	0.842
3	Exhaust	A	0.842
		B	0.842
4	Exhaust	A	0.842
		B	0.842
5	Exhaust	A	0.842
		B	0.842

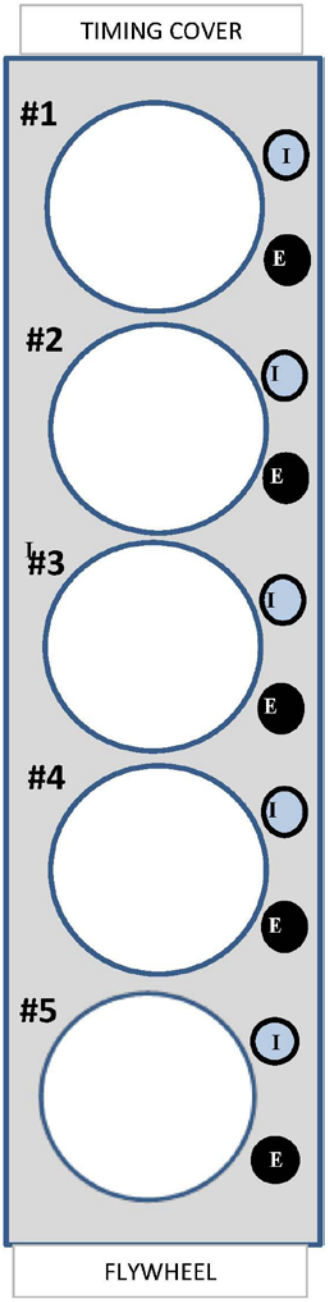

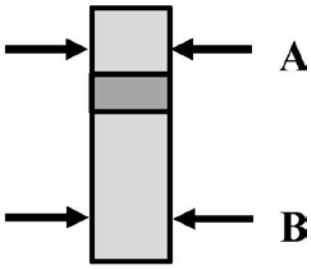

Remarks:

There were some visible scruff marks and minor wear marks on the cam surface, but no measureable wear.

Valve Guide Measurements

Specifications
Measurements were taken at A (initial) and B (final). The difference between these two points should be zero in its new state. To calculate the difference, subtract the initial from the final measurement (B-A).

Cylinder	Valve Type	Difference (Inches)
1	Intake	0.0025
2	Intake	0.0015
3	Intake	0.0025
4	Intake	0.0020
5	Intake	0.0010

Cylinder	Valve Type	Difference (Inches)
1	Exhaust	0.0015
2	Exhaust	0.0025
3	Exhaust	0.0010
4	Exhaust	0.0010
5	Exhaust	0.0020

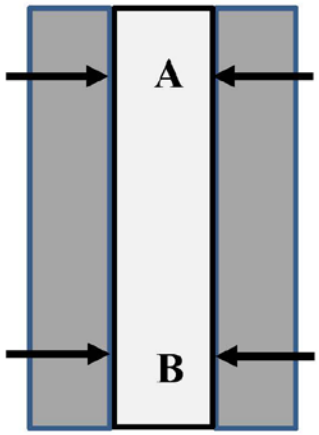

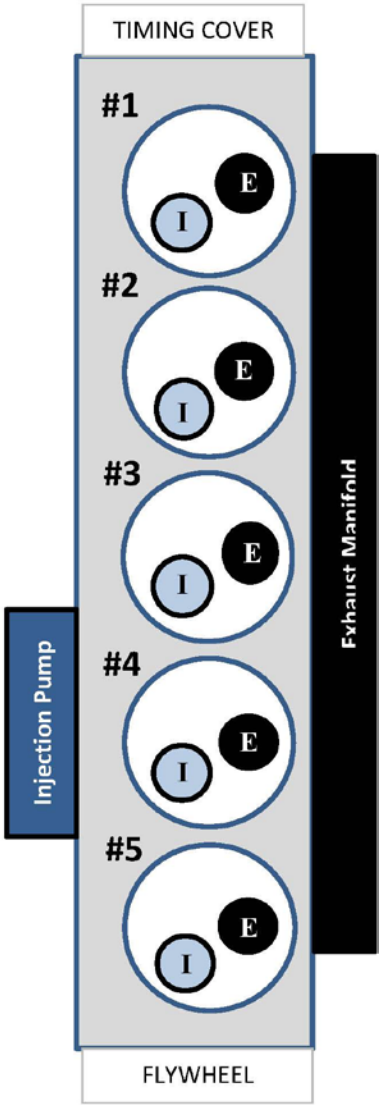

Remarks:

There was a taper found on all the valve guides. This may be from carbon build up on valve stems that coated the inside on the valve guides. Wear may have occurred from the carbon build up on the intake valves. Metal inside the valve guide is missing in the B area.

Valve Stem Diameter

Specification
Intake Valve Stem O.D. : 0.2751 – 0.2761 Inches
Exhaust Valve Stem O.D. : 0.2746 – 0.2755 Inches

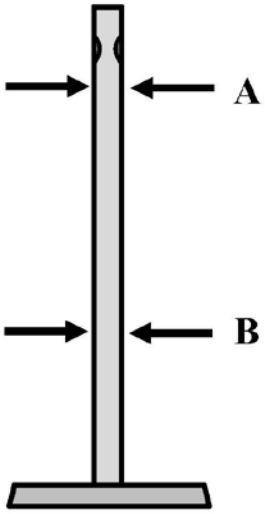

Cylinder	Valve Type	Position of Guide	Measurement (Inches)
1	Intake	A	0.2755
		B	0.2755
2	Intake	A	0.2755
		B	0.2755
3	Intake	A	0.2755
		B	0.2755
4	Intake	A	0.2755
		B	0.2755
5	Intake	A	0.2755
		B	0.2755

Cylinder	Valve Type	Position of Guide	Measurement (Inches)
1	Exhaust	A	0.2745
		B	0.2745
2	Exhaust	A	0.2750
		B	0.2755
3	Exhaust	A	0.2752
		B	0.2753
4	Exhaust	A	0.2752
		B	0.2754
5	Exhaust	A	0.2751
		B	0.2752

Remarks: Within specifications.

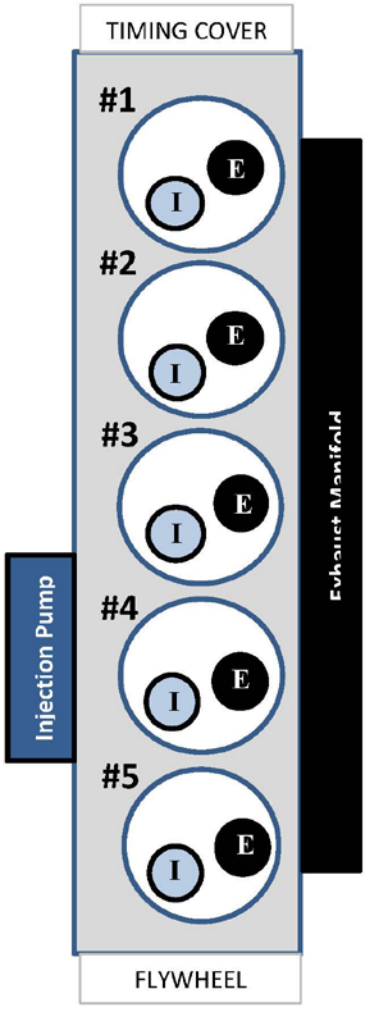

Spring Free Length

Specification
Minimum Free Length: 1.818 Inches

Cylinder	Valve	Length (Inches)
1	I	1.842
	E	1.830
2	I	1.830
	E	1.831
3	I	1.813
	E	1.832
4	I	1.823
	E	1.831
5	I	1.830
	E	1.834

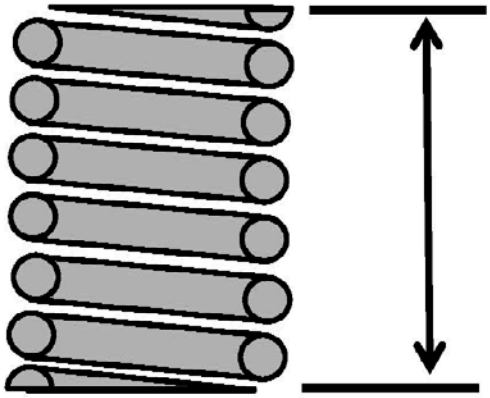

Spring Compressed Length

Specification
Spring Compressed Length: 1.4 Inches @ 56 lbs of Force

Cylinder	Valve	Force (lbs) at 14 In.
1	I	56
	E	56
2	I	57
	E	56
3	I	54
	E	56
4	I	56
	E	57
5	I	55
	E	56

Remarks: Cylinder 3 intake spring force was slightly weak. The free length was under minimum and was under the 56 lbs of rated force at 1.4 inches.

Valve Seat Width

Specification
Intake Seat Width: 0.077 Inches Exhaust Seat Width: 0.072 Inches

Cylinder	Intake	Exhaust
1	0.079	0.088
2	0.088	0.099
3	0.087	0.078
4	0.085	0.084
5	0.089	0.082

Remarks: Acceptable.

Appendix C: Photo Documentation

C-1 John Deere Serial Plate Number

C-2 Combustion System

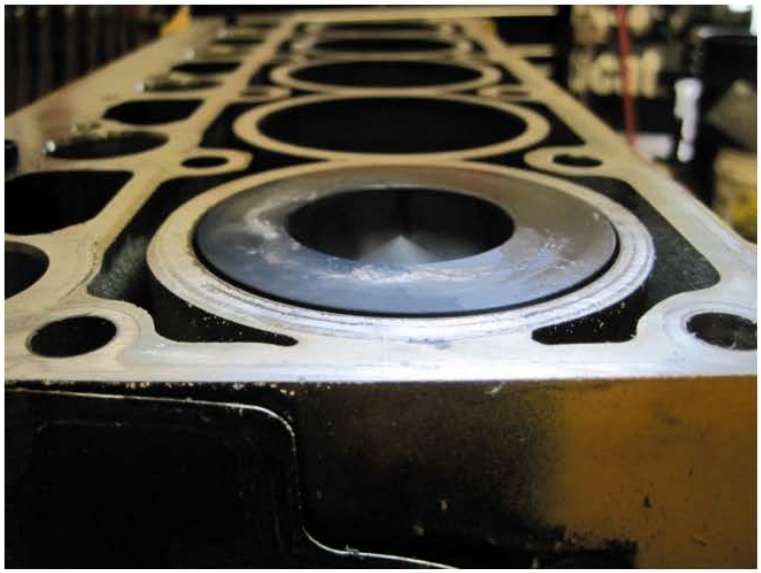

C-3 Cylinder 2 – Representative of Cylinders 1, 2, 3, & 4

C-4 Scoring Seen on Cylinder 5 Wall (overheating during initial trials)

C-5 Discoloring Found on Cylinder 2 Piston Skirt – Representative of Pistons 1, 2, 3, & 4 (indication of overheating)

C-6 Scoring Found on Cylinder 5 Piston Skirt (indication of overheating due to overloading)

C-7 Cylinder 5 Piston Skirt (indication of overheating due to overloading)

C-8 Piston Rings are Free with Normal Wear – Representative of Cylinders 1, 2, 3, 4, & 5

C-9 Cylinder 3 Piston Head – Representative of Pistons 3, 4, & 5

C-10 Cylinder 2 Piston Head – Minor Ding (foreign material passed through engine)

C-11 Cylinder 1 Piston Head

C-12 Cylinder 1 Piston Head (foreign material such as nut or washer passed through engine)

C-13 Piston Rod Bearing – Representative of Cylinders 1, 2, 3, 4, & 5

C-14 Mechanical Engine Speed Governor Fly Weights and Cam Shaft Gear

C-15 Crankshaft

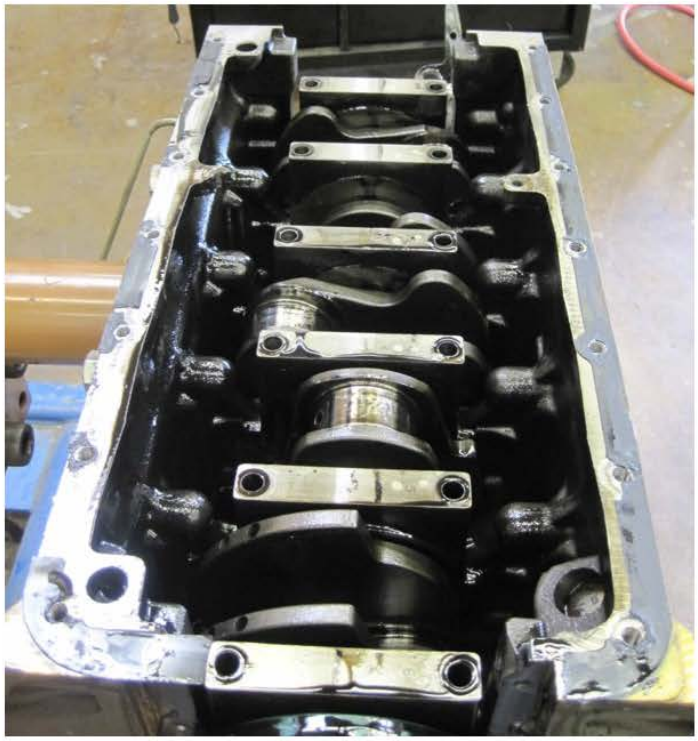

C-16 Lower Main Bearing 5 – Representative of Lower Main Bearings 1, 2, 3, 4, 5, & 6

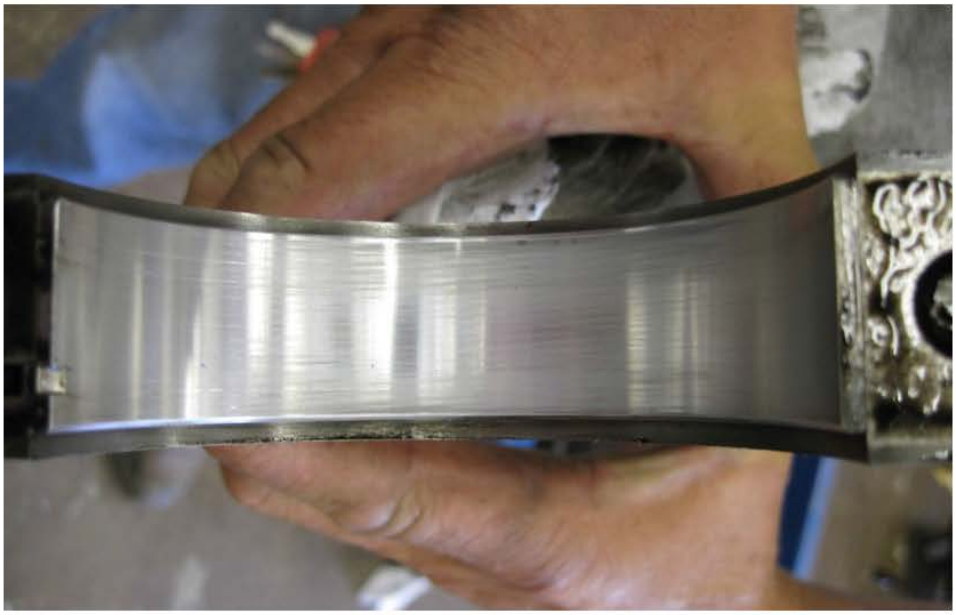

C-17 Upper Main Bearing 6 – Representative of Upper Main Bearings 1, 2, 3, 4, 5, & 6

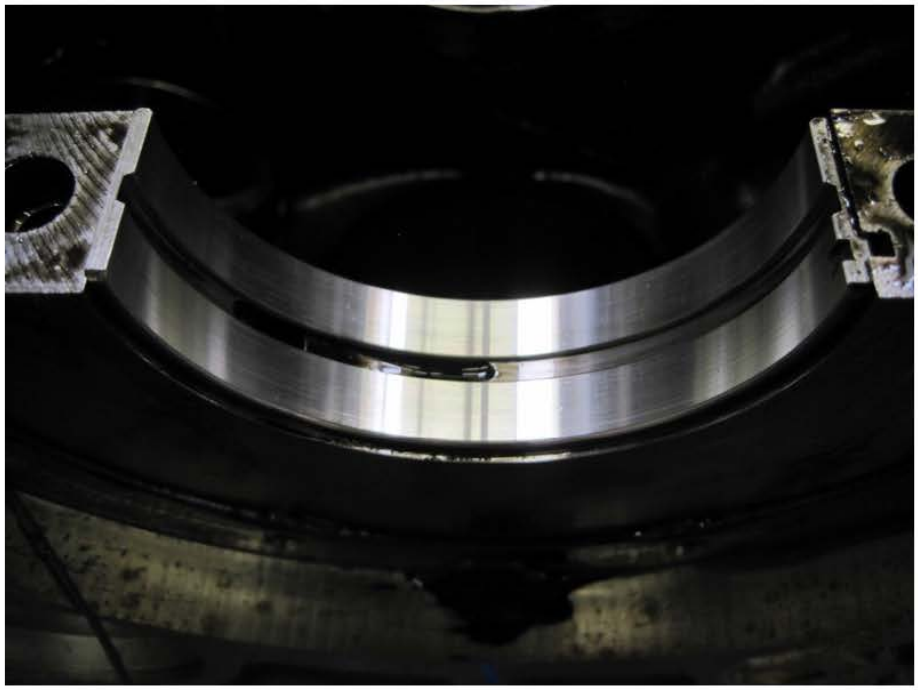

C-18 Upper Main Bearings

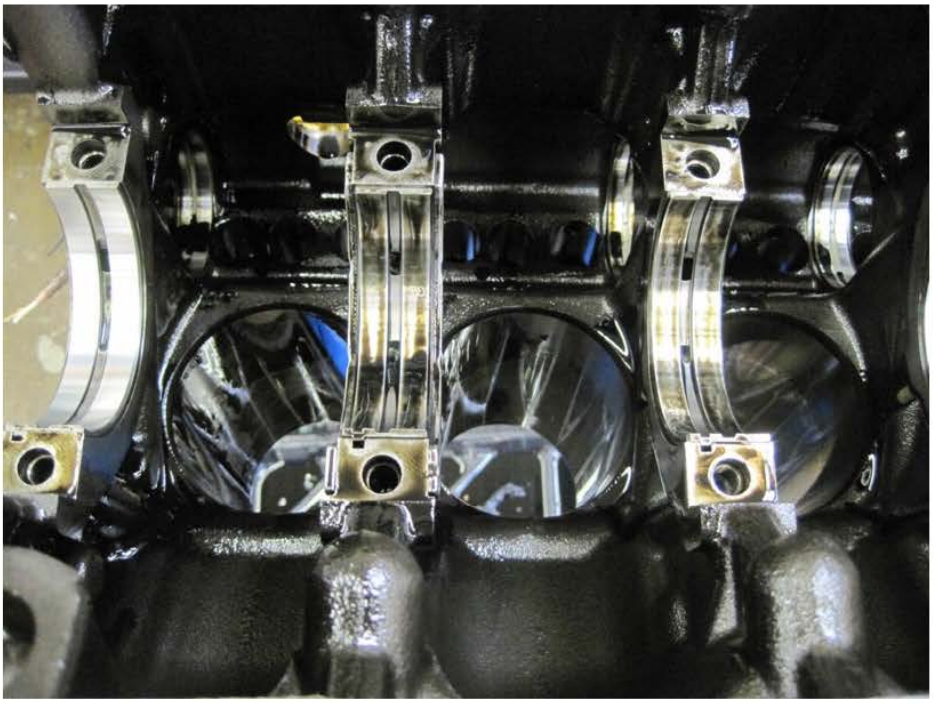

C-19 Crankshaft Journals

C-20 Rod Journal 1 – Representative of Rod Journals 1, 2, 3, 4, & 5

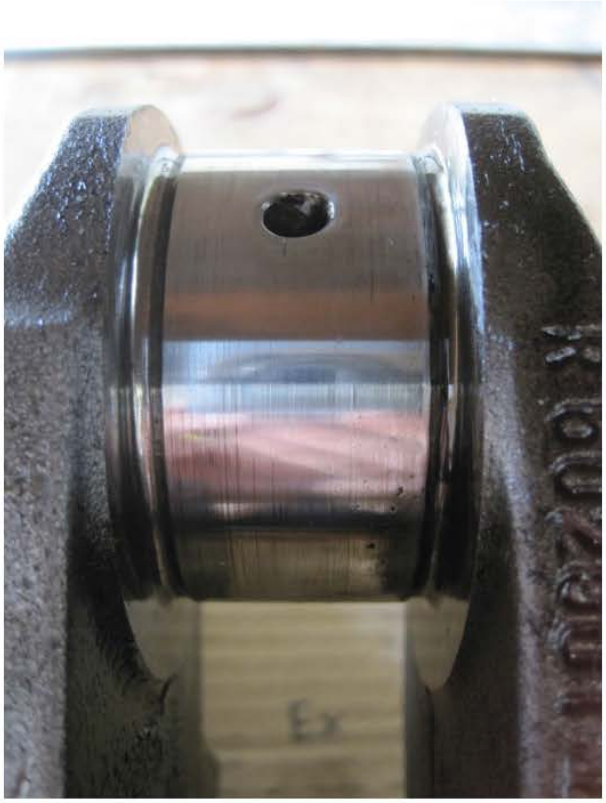

C-21 Cam Shaft Journals

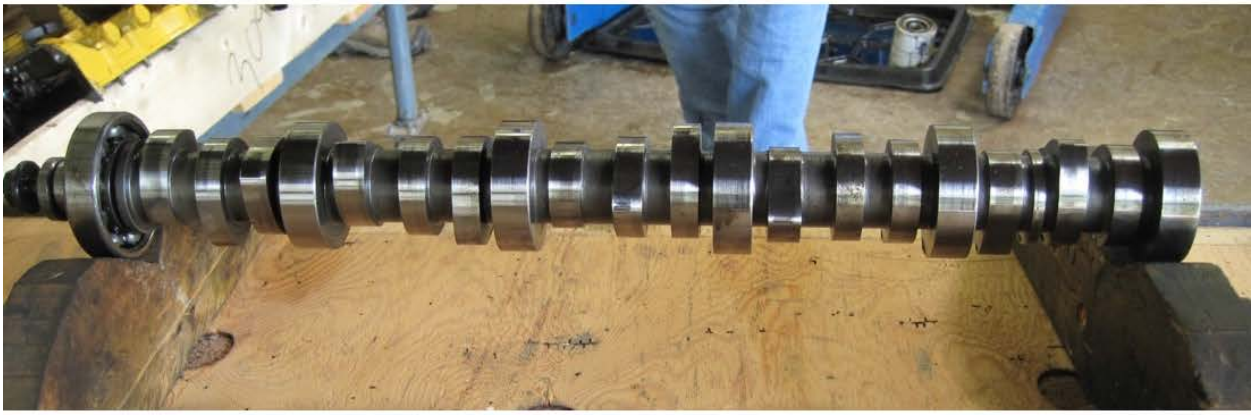

C-22 Cylinder 1 Intake, Exhaust, & Injector Lobes; Cam Journal 1
Representative of Cylinders 1, 2, 3, 4, & 5

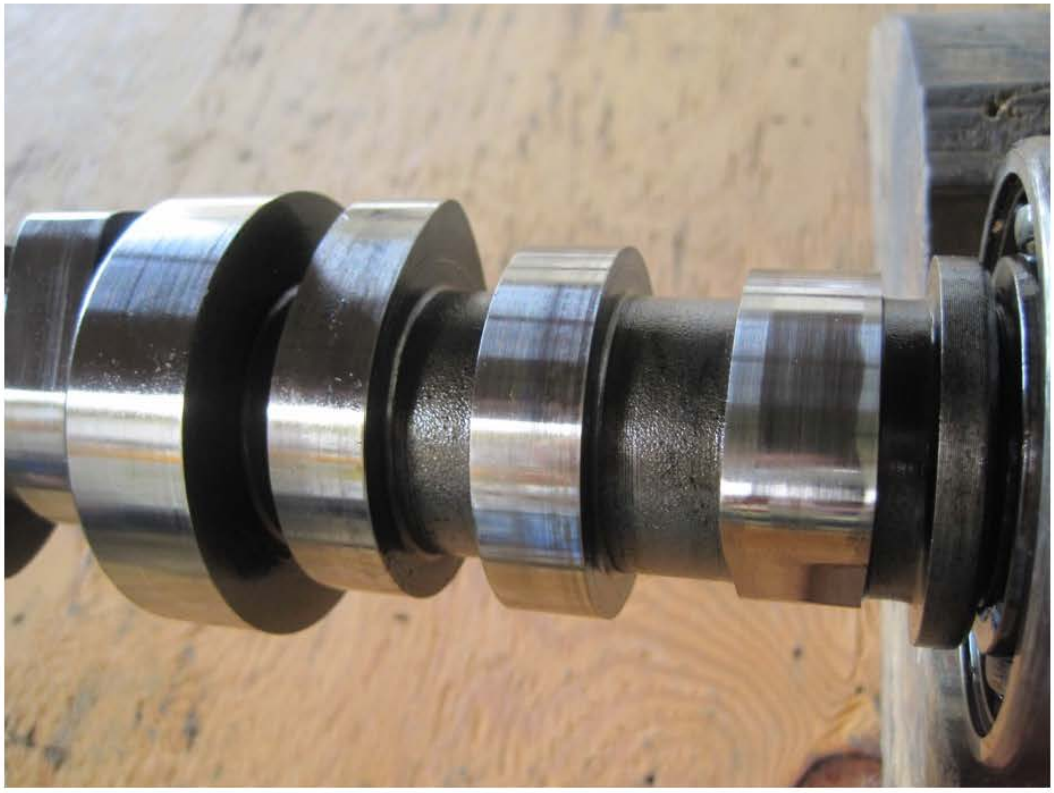

C-23 Cam Follower Stem – Representative of Cylinders 1, 2, 3, 4, & 5

C-24 Injector Nozzle – Representative of Cylinders 1, 2, 3, 4, & 5

C-25 Engine Head

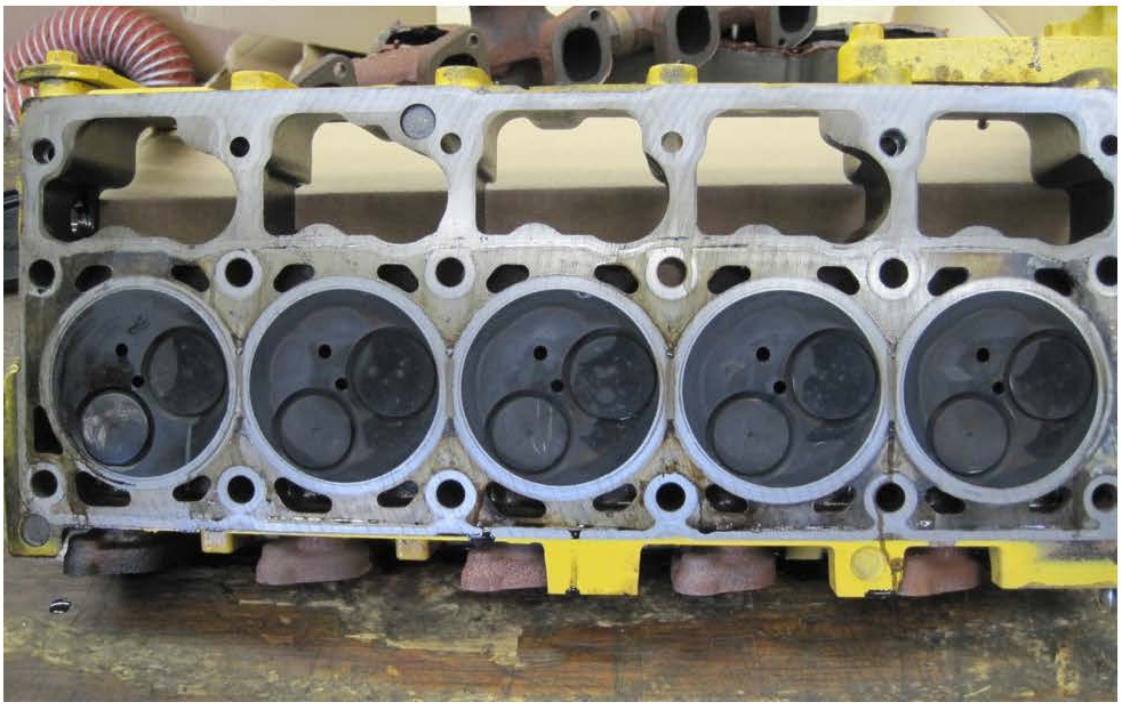

C-26 Engine Head Underside

C-27 Carbon Build Up on Intake Valve Housing; Cylinder 1
Representative of Cylinders 1, 2, 3, 4, & 5

C-28 Carbon Build Up on Intake Valve; Cylinder 1- Representative of Cylinders 1, 2, 3, 4, & 5

C-29 Cylinder 5 Exhaust Valve Seat – Pitting Found on Lower Left Surface
Representative of Exhaust Valves 1, 2, 3, 4, & 5

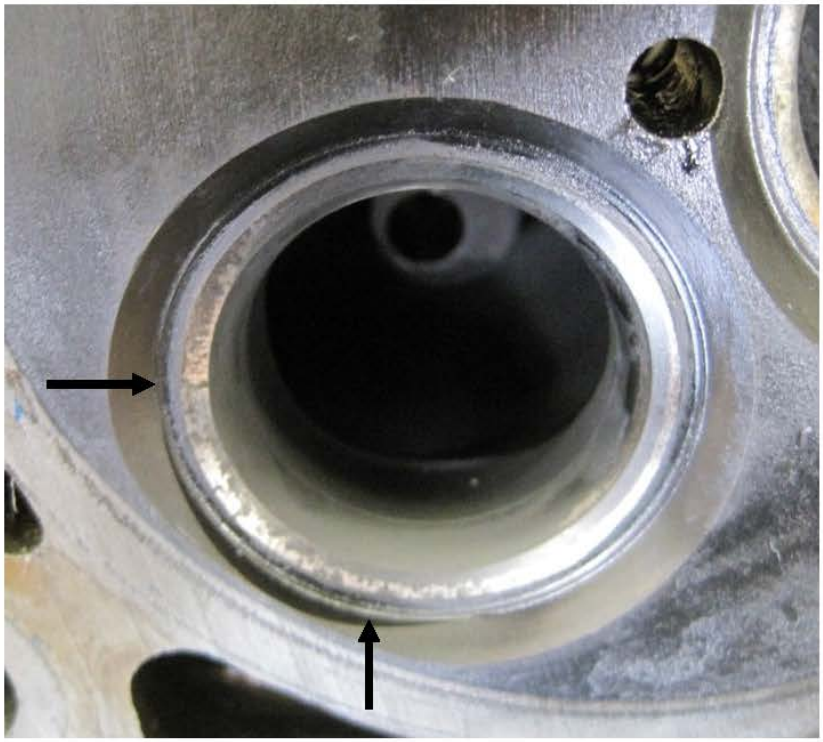

C-30 Cylinder 5 Exhaust and Intake Valve Seats

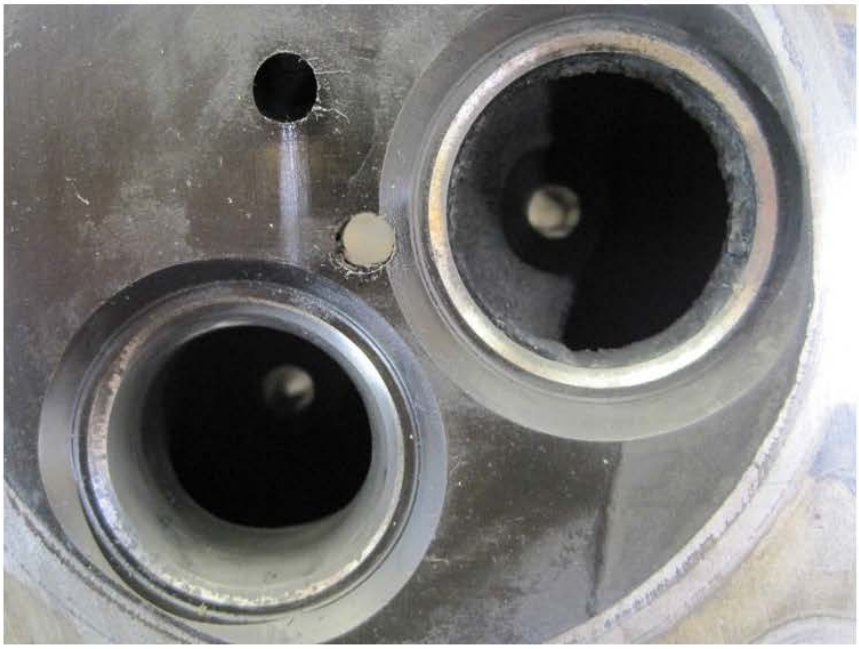

C-31 Exhaust Valve – Representative of Cylinders 1, 2, 3, 4, & 5

C-32 Exhaust Valve and Stem – Representative of Cylinders 1, 2, 3, 4, & 5

C-33 Turbo Charger

C-34 Turbo Charger Intake

C-35 Oil Pan

C-36 Oil Pan – Metallic Flakes and Heavy Particulate Found Under Turbo Return Area

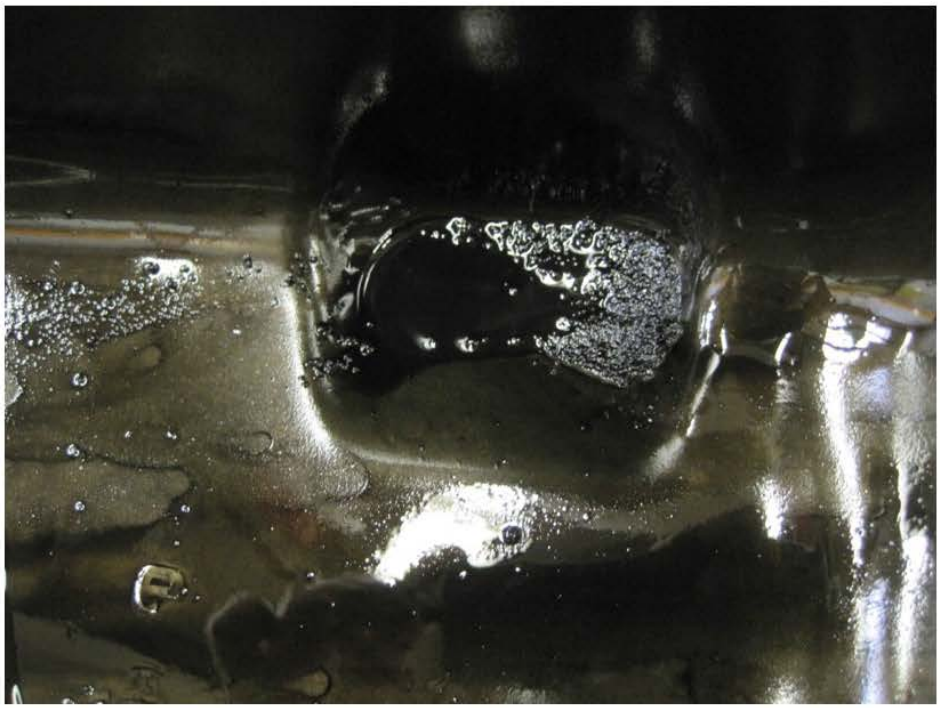

Appendix D - *Oil Scan* Oil Analysis

OILSCAN®

Analysis Report

Status: NORMAL on Jul 23 2015

Analysts, Inc. | ISO 17025 Accredited | 2450 Hassell Rd, Hoffman Estates, IL, 60169
Phone: 800-222-0071

Page: 1

Cobleskill College
Ray Roes
CURTIS-MOTT HALL 118
COBLESKILL, NY, 12043

Unit ID: **PE5030H191337** Unit Worksite: Comp. Ref. NO.: **6491963**

Component Type: **DIESEL ENGINE** Component: **ENGINE**

Unit Manufacturer and Model: **DEERE 5030** Oil Type: **SHELL ROTELLA 15W40**

Component Manufacturer and Model: **DEERE 5030** Component Serial Number: **191337**

Maintenance Recommendations for Lab No. 201508071091 Reported On: Aug 11 2015

From: Suny Cobleskill - **JDI Cobleskill, NY**

ANALYSIS INDICATES COMPONENT & OIL ARE IN SATISFACTORY CONDITION. RESAMPLE at normal interval.

SPECTROCHEMICAL ANALYSIS IN PARTS PER MILLION

EVAL ID MLABENNE

LAB NO.	Iron	Chromium	Nickel	Aluminum	Lead	Copper	Tin	Silver	Titanium	Silicon	Boron	Sodium	Potassium	Molybdenum	Phosphorus	Zinc	Calcium	Barium	Magnesium	Antimony	Vanadium	Sample Drawn
1091	77	2	4	20	1	11	<1	<0.1	<1	58	27	30	15	14	917	1215	2311	<1	31	1	<1	07/23/15

SAMPLE INFORMATION

LAB NO.	MI/HR Unit	MI/HR Oil	Oil Add	FLTR CHG	Oil CHG
1091	482	300	0	-	S

PHYSICAL TEST RESULTS

LAB NO.	Water %	Viscosity 100 °C	Visc Grade	Fuel %	T/S % vol
1091	<0.1	15.8	40	<0.50	0.2

Notice: This analysis is intended as an aid in predicting mechanical wear. Test results, maintenance recommendations and accuracy are affected by customer-provided samples, equipment identification and maintenance history. No guarantee, expressed or implied, is made against failure of this piece of equipment or a component thereof. The ultimate responsibility for the maintenance of this piece of equipment and all of its components is the responsibility of the equipment owner.

N/R = Test not performed

© Copyright 2012, Analysts, Inc.

CTM301 - 2.4L and 3.0L Diesel Engines Cylinder Head and Valves Specifications

Cylinder Head and Valves Specifications

Item	Measurement	Specification
Unit Pump Clamp	Torque	50 N•m (37 lb-ft)
Glow Plug	Torque	13 N•m (9 lb-ft)
Glow Plug Wire Harness Nut	Torque	3.5 N•m (31 lb-in.)
Cylinder Head Cap Screw/Glow Plug Wire Harness	Torque	28 N•m (21 lb-ft)
Intake Valve	Recess in Cylinder Head	0.72—1.48 mm (0.028—0.058 in.)
Exhaust Valve	Recess in Cylinder Head	0.72—1.48 mm (0.028—0.058 in.)
Spring Free Length 0 N (0 lb-force) [Free length may vary slightly between valve springs.]	Height	46.2 mm (1.818 in.)
Spring Compressed 166 N (37 lb-force)	Height	37.2 mm (1.46 in.)
Spring Compressed 356 N (80 lb-force)	Height	27.0 mm (1.06 in.)
Intake Valve Head	OD	36.87—37.13 mm (1.452—1.462 in.)
Exhaust Valve Head	OD	33.87—34.13 mm (1.333—1.344 in.)
Intake Valve Stem	OD	6.987—7.013 mm (0.2751—0.2761 in.)
Exhaust Valve Stem	OD	6.974—7.000 mm (0.2746—0.2755 in.)
Valve Face	Maximum Runout (Intake and Exhaust)	0.038 mm (0.0015 in.)
Valves	Face Angle	29.25° ± 0.25°
Initial Cylinder Head Cap Screw (4-cylinder)	Torque	110 N•m (81 ft-lb)
Final Cylinder Head Cap Screws No.1 - No.8 (4-cylinder)	Torque	70 N•m (52 ft-lb) plus 150° +10/-0
Final Cylinder Head Cap Screws No.9 - No.10 (4-cylinder)	Torque	70N•m (52 ft-lb) plus 120° +10°/-0°
Initial Cylinder Head Cap Screw (5-cylinder)	Torque	110 N•m (81 ft-lb)
Final Cylinder Head Cap Screws No.1 - No.10 (5-cylinder)	Torque	70 N•m (52 ft-lb) plus 150° +10°/-0°
Final Cylinder Head Cap Screws No.11 - No.12 (5-cylinder)	Torque	70N•m (52 ft-lb) plus 120° +10°/-0°
Unit Pump Clamp	Torque	50 N•m (37 lb-ft)
Top of valve spring retainer to cylinder head	Height	37.0 mm (1.46 in.) minimum
Rocker Arm Capscrew	Torque	40 N·m (30 lb-ft)

RG41183,000005C-19-20041012

CTM301 - 2.4L and 3.0L Diesel Engines
Camshaft, Balancer Shafts and Timing Gear Train Specifications

Camshaft, Balancer Shafts and Timing Gear Train Specifications

Item	Measurement	Specification
Camshaft	End Play	0.08—0.23 mm (0.003—0.009 in.)
Balancer Shaft	End Play	0.08—0.38 mm (0.003—0.015 in.)
Camshaft Journal	OD	55.872—55.898 mm (2.1997—2.2007 in.)
Camshaft Bore, Front No. 1(Ball Bearing)	ID	55.961—55.987 mm (2.2031—2.2042 in.)
Camshaft Bore, All Except No. 1	ID	55.986—56.012 mm (2.2042—2.2052 in.)
Camshaft Journal-to-Bushing, No. 1 Bore (With Bushing)	Oil Clearance	0.063—0.115 mm (0.0025—0.0045 in.)
Camshaft Intake Lobe	Height	7.05—7.31 mm (0.278—0.288 in.)
Camshaft Exhaust Lobe	Height	6.89—7.15 mm (0.271—0.281 in.)
Fuel Supply Pump Camshaft Lobe	Diameter	42.67—42.93 mm (1.68—1.69 in.)
Camshaft Follower	OD	31.61—31.64 mm (1.245—1.246 in.)
Camshaft Follower Bore in Block	ID	31.70—31.75 mm (1.248—1.250 in.)
Camshaft Follower-to-Bore	Clearance	0.06—0.13 mm (0.002—0.005 in.)
Balancer Shaft Bushing (New)	ID	30.038—30.104 mm (1.1826—1.1852 in.)
Balancer Shaft Journal	OD	29.987—30.013 mm (1.1806—1.1816 in.)
Balancer Shaft Journal-to-Bushing	Oil Clearance	0.025—0.117 mm (0.0009—0.0046 in.)
Cylinder Block Bore for Balancer Shaft Bushing	ID	33.500—33.526 mm (1.3189—1.3199 in.)
Balancer Shaft Thrust Plate (New)	End Play	Not to Exceed 0.45 mm (0.02 in.)

RG41183,000005F-19-20040430

CTM301 - 2.4L and 3.0L Diesel Engines
Cylinder Block, Liners, Pistons, and Rods Specifications

Cylinder Block, Liners, Pistons, and Rods Specifications

Item	Measurement	Specification
Piston Ring-to-Groove Clearance—New Piston Ring (First Compression Ring Groove)	Maximum Clearance	0.12 mm (0.005 in.)
Piston Ring-to-Groove Clearance—New Piston Ring (Second Compression Ring Groove)	Maximum Clearance	0.098 mm (0.004 in.)
Piston Ring-to-Groove Clearance—New Piston Ring (Third Oil Control Ring Groove, Standard Ring)	Maximum Clearance	0.09 mm (0.004 in.)
Piston Pin Bore	ID	30.003—30.009 mm (1.1812—1.1815 in.)
Piston Skirt (Measurement Taken at Bottom of Skirt 12 mm (0.5 in.) from Bottom of Piston)	Diameter	85.876—85.908 mm (3.381—3.382 in.)
Piston — Turbocharged Engines	Height	53.415—53.465 mm (2.103—2.105 in.)
Cylinder Bore	ID	85.987—86.013 mm (3.385—3.386 in.)
Piston-to-Cylinder Bore Clearance (Measured at Bottom of Piston Skirt)	Clearance	0.079—0.137 mm (0.003—0.005 in.)
Crankshaft Journal	OD	59.987—60.013 mm (2.361—2.363 in.)
Assembled Rod Bearing	ID	60.030—60.073 mm (2.363—2.365 in.)
Connecting Rod Bearing-to-Journal Minimum	Clearance	0.017 mm (0.001in.)
Maximum	Clearance	0.086 mm (0.003 in.)
Connecting Rod Bore (Without Bearing Inserts)	ID	63.437—63.463 mm (2.498—2.499 in.)
Piston Pin	OD	29.994—30.000 mm (1.1809—1.1811 in.)
	OD Wear Limit	29.980 mm (1.1808 in.)
Piston Pin	Length	67.75—68.00 mm (2.667—2.677 in.)
Rod Bearing Bore-to-Piston Pin Bushing Bore (Center-to-Center)	Measurement	170 mm (6.69 in.)
Plug (Oil Gallery)	Torque	15 N·m (11 lb-ft)
Camshaft Follower Bore in Block	ID	21.428—21.454 mm (0.8436—0.8446 in.)
Camshaft Follower (New)	OD	21.392—21.404 mm (0.8422—0.8427 in.)
Connecting Rod Cap Screws	Initial Torque	35 N·m (18 lb-ft)
Connecting Rod Cap Screws	Torque-Turn	1/4 Turn (90—100°) After Initial Torque

RG41183,000005D-19-20091012

CTM301 - 2.4L and 3.0L Diesel Engines
Crankshaft, Main Bearings, and Flywheel Specifications

Crankshaft, Main Bearings, and Flywheel Specifications

Item	Measurement	Specification
Damper	Maximum Radial Runout (Concentricity)	1.00 mm (0.040 in.)
Damper Pulley Outer Ring	Wobble (Maximum)	1.50 mm (0.060 in.)
Damper Pulley Inner Ring	Wobble (Maximum)	0.5 mm (0.020 in.)
Starter Motor Mounting Cap Screws	Torque	80 N·m (59 lb-ft)
Initial Pulley Mounting Cap Screw	Torque	100 N·m (74 lb-ft)
Final Pulley Mounting Cap Screw	Torque Turn	50 N·m + 90° (37 lb-ft + 90°)
Crankshaft	End Play	0.089—0.396 mm (0.004—0.016 in.)
Flywheel Face Flatness	Maximum Variation	0.23 mm (0.009 in.)
	Maximum Variation per 25 mm (1.0 in.) of Travel	0.013 mm (0.0005 in.)
Flywheel Bearing Bore Concentricity	Maximum Variation	0.127 mm (0.005 in.)
Rear Oil Seal Housing Cap Screws	Torque	17 N·m (13 lb-ft)
Crankshaft Main Bearing Cap Screws	Torque	80 N·m (59 lb-ft)
Crankshaft Main Bearing-to-Journal	Oil Clearance	0.021—0.090 mm (0.0008—0.0035 in.)
Main Bearing Cap Screws	Torque	80 N·m (59 lb-ft)
Crankshaft Main Bearing	ID	75.034—75.077 mm (2.9541—2.9558 in.)
Crankshaft Main Journal	OD	74.987—75.013 mm (2.9522—2.9533 in.)
Crankshaft Rod Journal	OD	59.987—60.013 mm (2.36170—2.3627 in.)
Crankshaft Main or Rod Journal	Maximum Taper	0.010 mm (0.0004 in.)
Crankshaft Main or Rod Journal	Maximum Out-of-Round	0.008 mm (0.0003 in.)
Crankshaft Main Thrust Bearing Journal Width	Width	31.302—31.378 mm (1.2340—1.2350 in.)
Crankshaft Main Thrust Washer	Overall Thickness	2.95—3.05 mm (0.120—0.116 in.)
Crankshaft Main Bearing Bore (Without Bearings)	ID	79.892—79.918 mm (3.1454—3.1464 in.)
Crankshaft Main Bearing Cap Screws	Torque	80 N·m (59 lb-ft)
Crankshaft	End Play	0.089—.396 mm (0.004—0.016 in.)
Initial Flywheel Housing Cap Screws	Torque	35 N·m (26 lb-ft)
Final Flywheel Housing Cap Screws	Torque	140 N·m (105 lb-ft)
Initial Flywheel Mounting Cap Screws	Torque	30 N·m (20 lb-ft)
Final Flywheel Mounting Cap Screws	Torque	110 N·m (80 lb-ft)
Balancer Shaft Weight Cap Screws	Torque	16.5 N·m (12 lb-ft)

RG41183,000005E-19-20070109

CTM101019 - PowerTech™ E 2.4L and 3.0L Diesel Engines Turbocharger Oil Seal — Leak Check

Turbocharger Oil Seal — Leak Check

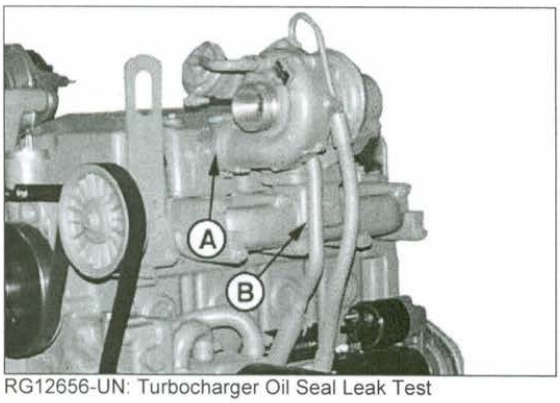

RG12656-UN: Turbocharger Oil Seal Leak Test

LEGEND:

A - Inlet Hose
B - Oil Return Line

Seals are used on both sides of the turbocharger rotor assembly. The seals are used to prevent exhaust gasses and air from entering the turbocharger housing. Oil leakage past the seals is uncommon but can occur.

A restricted or damaged turbocharger oil return line can cause the housing to pressurize, causing oil to leak by the seals. Additionally, intake or exhaust restrictions can cause a vacuum between the compressor and turbocharger housing, causing oil to leak by the seals.

1. Remove exhaust pipe (shown removed) and inlet hose (A).
2. Inspect the turbine casing and inlet hose for evidence of oil leakage.

   If oil leakage is present, perform the following:

   - Inspect turbocharger oil return line (B) for kinks or damage. Replace if necessary.
   - Check the air intake filter, hoses, and inlet hose for restrictions.
   - Check the exhaust system for restrictions to include position of exhaust outlet.
3. Perform necessary repairs and repeat test.

MK41968,000005E-19-20091217

CTM101019 - PowerTech™ E 2.4L and 3.0L Diesel Engines Crankcase Pressure Blow-By Test

Crankcase Pressure Blow-By Test

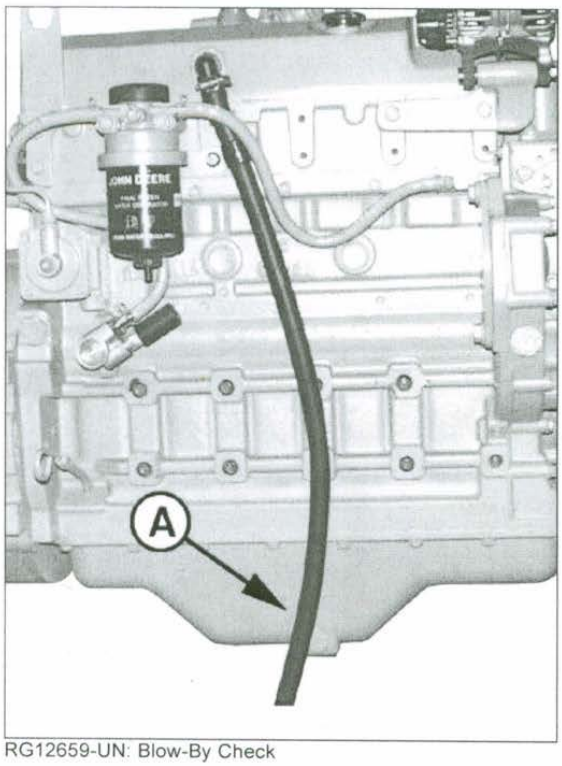

RG12659-UN: Blow-By Check

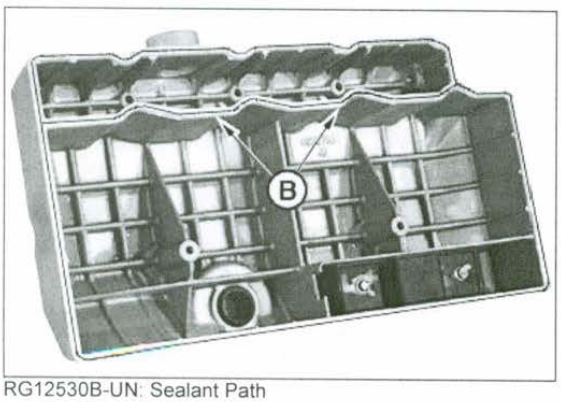

RG12530B-UN: Sealant Path

LEGEND:

A - Breather Tube
B - Sealant Path

Excessive blow-by coming out of the crankcase breather tube (A) indicates that either the turbocharger (if equipped) seals are faulty or the piston rings and cylinder bores are not adequately sealing off the combustion chamber. This is a comparative check that requires some experience to determine when blow-by is excessive.

Run engine at high idle and check crankcase breather tube. Look for significant fumes and/or dripping oil coming out of the breather tube at fast idle, with no load.

If excessive blow-by is observed, perform the following to determine if the turbocharger (if equipped) is causing the blow-by:

1. Remove the turbocharger oil drain line where it connects to the engine block and run line into a bucket.
2. Run engine at high idle, slightly loaded, and determine if boost pressure is forcing oil through the drain line. Check crankcase breather tube to determine if blow-by has decreased.
3. If it appears that boost pressure is forcing oil through the drain line, and/or blow-by decreases with the drain line disconnected from block, replace the turbocharger, and retest.
4. Remove rocker arm cover and inspect sealant path (B) for areas showing possible blow-by. Clean ssurface and apply sealant as shown and and reinstall. Allow sealant to completely cure. Run engine at high idle and check crankcase breather tube.

MK41968,0000054-19-20100415

CTM101019 - PowerTech™ E 2.4L and 3.0L Diesel Engines Mechanical Compression Test

Mechanical Compression Test

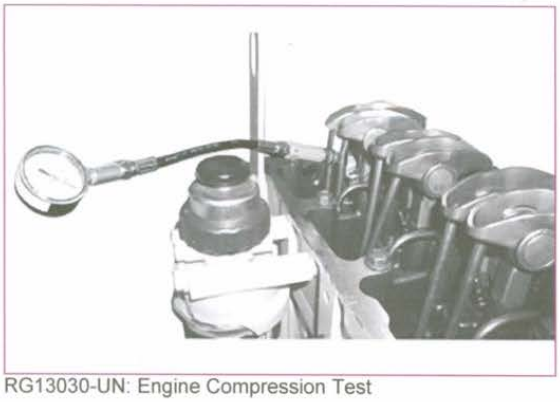

RG13030-UN: Engine Compression Test

IMPORTANT:

Compression pressures are affected by the cranking speed of the engine. Before beginning test, ensure that batteries are fully charged.

1. Start engine and run at rated speed until it warms up to normal operating temperature. (From a cold start, operate engine 10—15 minutes at slow idle.)
2. Shut off engine and remove the rocker arm cover. See Rocker Arm Cover — Installation and Removal in Group 20.
3. Shut off fuel supply and remove glow plugs. See Glow Plugs — Removal in Section 20.
4. Install JDG1687 into glow plug bore in the cylinder head and tighten to specification. Attach 45° quick disconnect fitting to compression adapter and install compression gauge to adapter. Do not tighten adapter to more than glow plug torque specification.

Item	Measurement	Specification
Glow Plug	Torque	13 N·m (10 lb-ft)

5. Set rocker arm cover on top of cylinder head to reduce oil spray from push rods.

Compression Test

1. Push throttle lever to "STOP" position. Turn crankshaft for 10—15 seconds with starter motor (minimum cranking speed—150 rpm cold/200 rpm hot).
2. Compare readings from all cylinders. Compression pressure must be within specification.

Item	Measurement	Specification
Engine Compression Pressure Test	Engine Compression Pressure	2379—2792 kPa (24—28 bar) (345—405 psi)
	Maximum Difference between Cylinders	350 kPa (3.5 bar) (50 psi)

NOTE:

Pressure given was taken at 183 m (600 ft) above sea level. A 3.6 percent reduction in gauge pressure will result for each additional 300 m (1000 ft) rise in altitude.

All cylinders within an engine should have approximately the same pressure. There should be less than 340 kPa (3.4 bar) (50 psi) difference between cylinders.

3. If pressure is much lower than shown, remove gauge and apply oil to ring area of piston through injection nozzle or glow plug bore. Do not use too much oil. Do not get oil on the valves.

4. Test compression pressure again.

   If pressure is high, worn or stuck rings are indicated, replace piston rings or install new piston set as needed. See Piston Rings — Installation , Piston and Connecting Rod — Reassemble and Piston and Connecting Rod Assembly — Installation in Section 02, Group 030.

   If pressure is low, valves could be worn or sticking. Recondition cylinder head as required. (See Cylinder Head — Thickness Check in Section 02, Group 020.)

5. Measure compression pressure in all remaining cylinders and compare readings. Recondition cylinders and valves as required.

   IMPORTANT:

   When testing is completed, use a clean lint free rag to clean all oil from intake manifold ports.

MK41968,00000A8-19-20100601

CTM301 - 2.4L and 3.0L Diesel Engines
Turbocharger Inspection

Turbocharger Inspection

The following inspection procedure is recommended for systematic failure analysis of a suspected failed turbocharger. This procedure will help to identify when a turbocharger has failed, and why it has failed so the primary cause of the failure can be corrected.

Proper diagnosis of a non-failed turbocharger is important for two reasons. First, identification of a non-failed turbocharger will lead to further investigation and repair of the cause of a performance complaint.

Second, proper diagnosis eliminates the unnecessary expense incurred when a non-failed turbocharger is replaced.

The recommended inspection steps, which are explained in detail on following pages, are:

- Compressor Housing Inlet and Compressor Wheel.
- Compressor Housing Outlet.
- Turbine Housing Inlet.
- Turbine Housing Outlet and Turbine Wheel.
- External Center Housing and Joints.
- Perform Axial End Play Test

NOTE:

To enhance the turbocharger inspection, an inspection sheet (Form No. DF-2280 available from Distribution Service Center—English only) can be used that lists the inspection steps in the proper order and shows potential failure modes for each step. Check off each step as you complete the inspection and record any details or problems obtained during inspection. Retain this with the work order for future reference.

Compressor Housing Inlet and Compressor Wheel

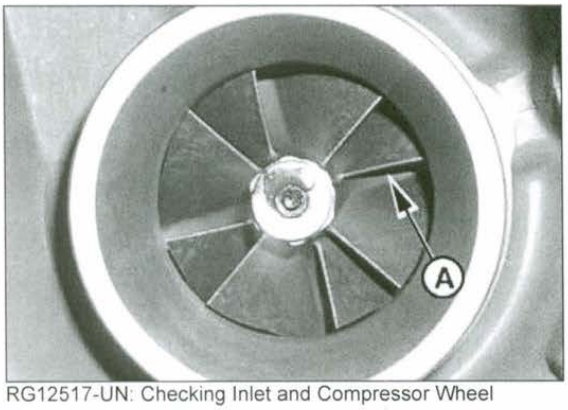

RG12517-UN: Checking Inlet and Compressor Wheel

LEGEND:

A - Compressor Wheel

1. Check compressor inlet and compressor wheel (A) for foreign object damage.

NOTE:

Foreign object damage may be extensive or minor. In either case, the source of the foreign object must be found and corrected to eliminate further damage.

2. Mark findings on your checklist and continue the inspection.

3. *NOTE:*

You will need a good light source for this check.

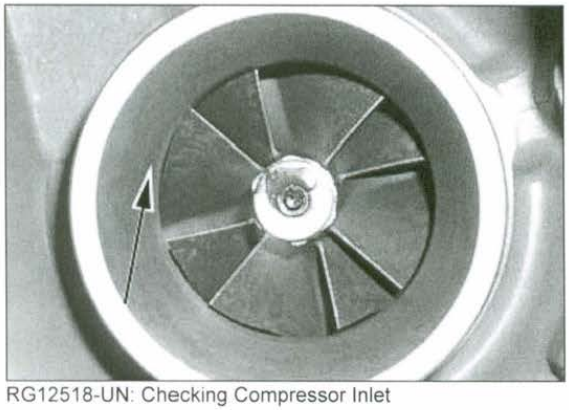

RG12518-UN: Checking Compressor Inlet

Check compressor inlet for wheel rub on the housing (arrow). Look very closely for any score marks on the housing itself and check the tips of the compressor wheel blades for damage.

Compressor Housing Outlet

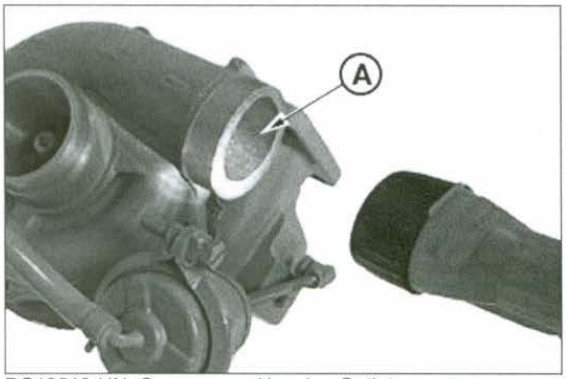

RG12519-UN: Compressor Housing Outlet

LEGEND:

A - Compressor Housing Outlet

1. Check compressor housing outlet (A). The outlet should be clean and free of dirt or oil.
2. Mark it on your checklist if dirt or oil is found and continue the inspection.

Turbine Housing Inlet

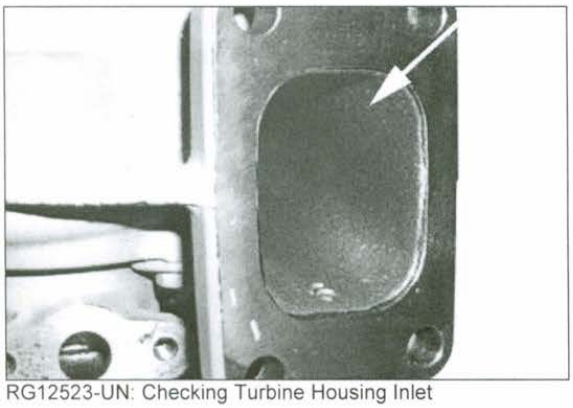

RG12523-UN: Checking Turbine Housing Inlet

Check the turbine housing inlet (arrow) for oil in housing, excessive carbon deposit.

NOTE:

If the inlet is wet with oil, or has excessive carbon deposits, an engine problem is likely.

Turbine Housing Outlet and Turbine Wheel

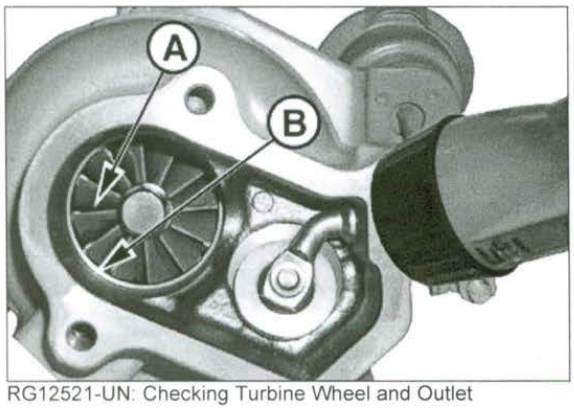

RG12521-UN: Checking Turbine Wheel and Outlet

LEGEND:

A - Blades
B - Turbine Housing Outlet

1. Use a flashlight to look up inside the turbine housing outlet (A) and check blades (B) for foreign object damage.

2. 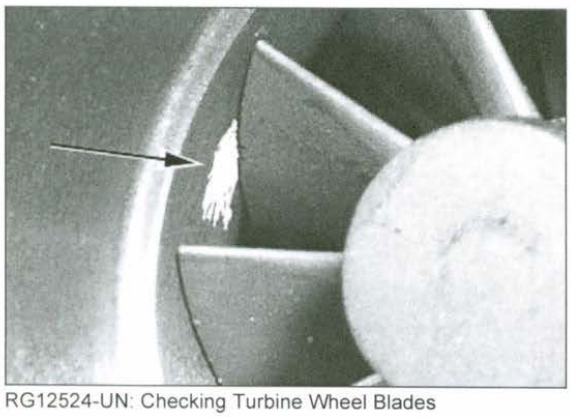

RG12524-UN: Checking Turbine Wheel Blades

Inspect the wheel blades and housing for evidence of wheel rub (arrow). Wheel rub can bend the tips of the blades with the housing showing wear or damage.

3. 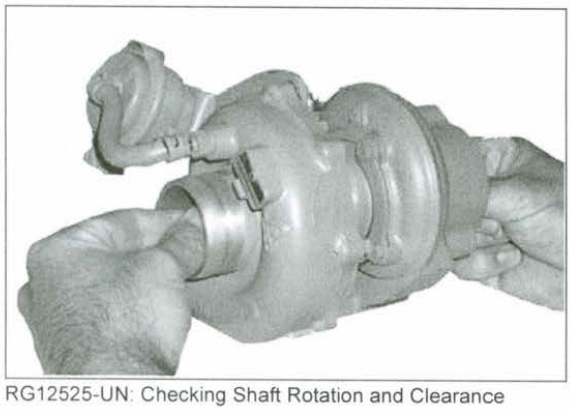

RG12525-UN: Checking Shaft Rotation and Clearance

Rotate the shaft, using both hands, to check rotation and clearance. The shaft should turn freely, however, there may be a slight amount of drag.

4. **IMPORTANT:**

Use only moderate hand force (3-4 pounds) on each end of shaft.

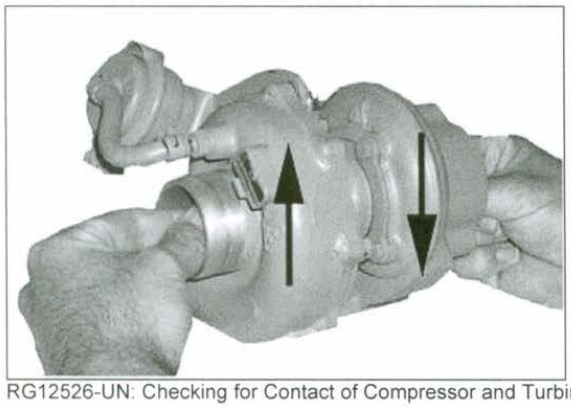

RG12526-UN: Checking for Contact of Compressor and Turbine Wheels

Next, pull up on the compressor end of the shaft and press down on the turbine end while rotating shaft. Neither the compressor wheel nor the turbine wheel should contact the housing at any point.

NOTE:

There will be some "play" because the bearings inside the center housing are free floating.

External Center Housing and Joints

RG12520-UN: Checking Center Housing

Visually check the outside of the center housing, all connections to the compressor, and turbine housing for oil.

NOTE:

If oil is present, make sure it is not coming from a leak at the oil supply or return line.

IMPORTANT:

Before you finalize your conclusion that the turbocharger has not failed, it is strongly recommended that the following procedures of checking radial bearing clearance and axial bearing endplay with a dial indicator be performed. These procedures are not required if a failure mode has already been identified.

Perform Axial Bearing End Play Test

RG12527-UN: Checking Axial Bearing End Play

This test will give an indication of the condition of the thrust bearing within the center housing and rotating assembly.

1. Mount magnetic base dial indicator so that indicator tip rests on flat surface on turbine end of shaft. Preload indicator tip and zero dial on indicator.
2. Move shaft axially back and forth by hand.
3. Observe and record total dial indicator movement.

Item	Measurement	Specification
Turbocharger Shaft	Axial Bearing End Play	0.064—0.114 mm (0.0025—0.0045 in.)

If bearing end play is not within specification, install a replacement turbocharger.

4. 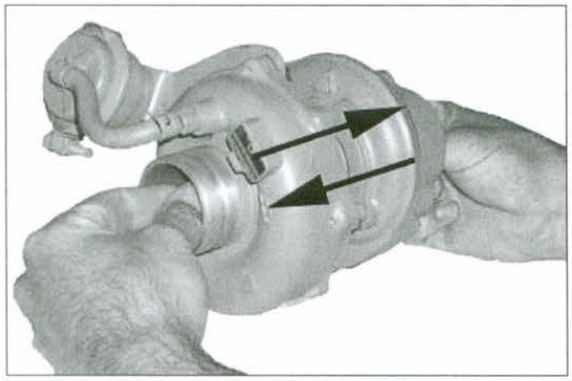

RG12528-UN: Checking Shaft End Play

Next, check shaft endplay by moving the shaft back and forth (arrows) while rotating. There will be some endplay but not to the extent that the wheels contact the housings.

NOTE:

These diagnostic procedures will allow you to determine the condition of the turbocharger. If the turbocharger has failed, analysis of your inspection notes should direct you to the specific areas of the engine to correct the problems causing the turbocharger failure. It is not unusual to find that a turbocharger has not failed. If your turbocharger passes all the inspections, the problem lies somewhere

Appendix F - Replacement Parts and Receipt

HRT
THE HUDSON RIVER TRACTOR COMPANY
hudsonrivertractorcompany.com

The Hudson River Tractor Company, LLC.
3021 State Highway 5s
P.O. Box 368
Fultonville, NY 12072
p. 518-853-3405 f. 518-853-8697

Goshen, NY
p. 845-294-2500

Chatham, NY
p. 518-392-2505

Clifton Park, NY
p. 518-877-5059

Schaghticoke, NY
p. 518-692-2676

JOHN DEERE

PARTS INVOICE

Invoice To Account No.: 54971

THE RESEARCH FOUNDATION OF
SUNY COBLESKILL
WARNER HALL 206
192 ALBANY AVE
COBLESKILL NY 12043

Home Phone:

Deliver To Account No.: 54971

THE RESEARCH FOUNDATION OF
SUNY COBLESKILL
WARNER HALL 206
192 ALBANY AVE
COBLESKILL NY 12043

Cell Phone:

Invoice No:	**237208**
Date:	7/30/2015
Page:	1 of 2
Payment Type:	Credit Card

Supplied Quantity	Back Order Quantity	Part Number	Part Description	Bin Loc	List Price	Net Price	Extended Price	Tax Ind
6.00	0.00	19M8986	.SCREW	E386-2	2.78	2.78	$16.68	N
2.00	0.00	21M7536	Screw		0.70	0.70	$1.40	N
6.00	0.00	40M1855	.SnSNAP RING	C141	2.65	2.65	$15.90	N
2.00	0.00	L157372	.Screw	E455	1.00	1.00	$2.00	N
5.00	0.00	R502454	Intake Valve		38.26	38.26	$191.30	N
5.00	0.00	R502455	Exhaust Valve		38.26	38.26	$191.30	N
10.00	0.00	R502503	Screw		2.05	2.05	$20.50	N
2.00	0.00	R516692	.SCREW		17.94	17.94	$35.88	N
10.00	0.00	R516693	.SCREW		8.56	8.56	$85.60	N
2.00	0.00	R522728	Spring		5.45	5.45	$10.90	N
1.00	0.00	RE44574	SEAL	B654	40.30	40.30	$40.30	N
1.00	0.00	RE508202	FUEL FILTE	B308	29.13	29.13	$29.13	N
1.00	0.00	RE519626	OIL FILTER	B713	10.69	10.69	$10.69	N
2.00	0.00	RE520936	Piston Replacement Kit		65.52	65.52	$131.04	N
5.00	0.00	RE520937	Bearing Kit		20.33	20.33	$101.65	N
1.00	0.00	RE524593	Gasket Kit		155.00	155.00	$155.00	N
1.00	0.00	RE528707	Engine Cylinder Head Gasket		60.19	60.19	$60.19	N
10.00	0.00	RE532712	Seal		4.45	4.45	$44.50	N
3.00	0.00	RE543439	Piston Ring Kit		21.04	21.04	$63.12	N
1.00	0.00	RE547148	GASKET KIT		122.82	122.82	$122.82	N

THE HUDSON RIVER TRACTOR COMPANY

hudsonrivertractorcompany.com

The Hudson River Tractor Company, LLC.
3021 State Highway 5s
P.O. Box 368
Fultonville, NY 12072
p. 518-853-3405 f. 518-853-8697

Goshen, NY
p. 845-294-2500

Chatham, NY
p. 518-392-2505

Clifton Park, NY
p. 518-877-5059

Schaghticoke, NY
p. 518-692-2676

JOHN DEERE

PARTS INVOICE

Invoice To Account No.: 54971

THE RESEARCH FOUNDATION OF
SUNY COBLESKILL
WARNER HALL 206
192 ALBANY AVE
COBLESKILL NY 12043

Home Phone:

Deliver To Account No.: 54971

THE RESEARCH FOUNDATION OF
SUNY COBLESKILL
WARNER HALL 206
192 ALBANY AVE
COBLESKILL NY 12043

Cell Phone:

Invoice No:	**237208**
Date:	7/30/2015
Page:	2 of 2
Payment Type:	Credit Card

Supplied Quantity	Back Order Quantity	Part Number	Part Description	Bin Loc	List Price	Net Price	Extended Price	Tax Ind
1.00	0.00	3750	FREIGHT		18.70	18.70	$18.70	N

Credit Card Information

Customer PO No:	
Tax Exempt No:	ST-125 ON FILE
Salesperson:	JIM FURMAN

Type:	Credit Card
Auth No:	v022337
Amount:	$1,348.60

Parts:	$1,329.90
Misc:	$18.70
Sales Tax:	$0.00
Deposit:	$0.00
Total:	$1,348.60

TERMS AND CONDITIONS

Terms net cash. All accounts not paid by the 10th of the month following purchase are subject to a Finance Charge at a monthly rate of 1.75%, which is an annual rate of 21%, applied to the previous balance without deducting current payments and/or credits.

All parts returned must be accompanied by this invoice and returned within 30 days. No returns of electrical parts. 20% restocking fee on all special order parts returned.

Received by: ..... Date: ..... Date: 7/30/2015

THE HUDSON RIVER TRACTOR CO FULT
3021 STATE HIGHWAY 5 S
FULTONVILLE, NY - 12072

Merchant Number: 008013032829

== Transaction Approved ==

Receipt #: 1462607475.53A2
Invoice #: 146260747553A2

Card Number: **********9898
Date: July 30, 2015
Card Type: VISA
Input Type: KEYED
Trans Type: Purchase
Auth #: 022337

Total: $1348.60

Signature X _____

I agree to pay above total amount according to card issuer agreement

Print Back