FINAL REPORT

Efficient Shallow Underwater UXO Retrieval

ESTCP Project MM-0606

NOVEMBER 2008

Jim R. McDonald
SAIC

Approved for public release; distribution unlimited.

Environmental Security Technology Certification Program

REPORT DOCUMENTATION PAGE

Form Approved
OMB No. 0704-0188

The public reporting burden for this collection of information is estimated to average 1 hour per response, including the time for reviewing instructions, searching existing data sources, gathering and maintaining the data needed, and completing and reviewing the collection of information. Send comments regarding this burden estimate or any other aspect of this collection of information, including suggestions for reducing the burden, to the Department of Defense, Executive Services and Communications Directorate (0704-0188). Respondents should be aware that notwithstanding any other provision of law, no person shall be subject to any penalty for failing to comply with a collection of information if it does not display a currently valid OMB control number.

PLEASE DO NOT RETURN YOUR FORM TO THE ABOVE ORGANIZATION.

1. REPORT DATE *(DD-MM-YYYY)*	2. REPORT TYPE	3. DATES COVERED *(From - To)*
17-09-2009	FINAL	18 Jan 2007 - Present

4. TITLE AND SUBTITLE

Efficient Shallow Underwater UXO Retrieval

5a. CONTRACT NUMBER

W912HQ-06-C-0016

5b. GRANT NUMBER

5c. PROGRAM ELEMENT NUMBER

6. AUTHOR(S)

M. Christopher Gibson,
Jim R. McDonald

5d. PROJECT NUMBER

MM2006-06

5e. TASK NUMBER

5f. WORK UNIT NUMBER

7. PERFORMING ORGANIZATION NAME(S) AND ADDRESS(ES)

SAIC - Advanced Sensors and Analysis Division
Cary, NC 27513

8. PERFORMING ORGANIZATION REPORT NUMBER

SAIC Project No. 01-0031-08-6139-111

9. SPONSORING/MONITORING AGENCY NAME(S) AND ADDRESS(ES)

Environmental Security Technology Certification Program
901 North Stuart St.
Suite 303
Arlington, VA 22203

10. SPONSOR/MONITOR'S ACRONYM(S)

ESTCP

11. SPONSOR/MONITOR'S REPORT NUMBER(S)

MM2006-06

12. DISTRIBUTION/AVAILABILITY STATEMENT

Approved for Public Release; distribution is unlimited.

13. SUPPLEMENTARY NOTES

14. ABSTRACT

The authors have developed a semi-automated efficient recovery approach for investigating and recovery of Dud and DMM ordnance buried in marine sediments. A fiberglass shroud is placed over the target item; a water jet/vacuum dredge is used to uncover the buried target. TV or sonar imaging is used to identify the target and determine fuzing. An array of electromagnets is used to recover the target for disposal. All operations are designed to be carried out without diver intervention.

15. SUBJECT TERMS

UXO, MEC, Underwater, Retrieval/Recovery

16. SECURITY CLASSIFICATION OF:			17. LIMITATION OF ABSTRACT	18. NUMBER OF PAGES	19a. NAME OF RESPONSIBLE PERSON
a. REPORT	b. ABSTRACT	c. THIS PAGE			Jim R. McDonald
U	U	U	UU	46	19b. TELEPHONE NUMBER *(Include area code)* 919-677-1519

CONTENTS

FIGURES iv

TABLES vi

ACRONYMS vii

EXECUTIVE SUMMARY viii

1.0 Introduction 1

1.1 Background 1

1.2 Objectives of the Demonstration 2

1.3 Regulatory Drivers 2

2.0 Technology 3

2.1 Technology Description 3

2.1.1 Spud Design and Operation 3
2.1.2 Recovery Shroud 5
2.1.3 Dredge Assembly 6
2.1.4 Television Camera 7
2.1.5 Recovery Assembly 8
2.1.5.1 Electromagnets 9

2.2 Technology Development 12

2.2.1 Simulations Inputs 13
2.2.2 The Explosive Model 13
2.2.3 The Two Dimensional Shroud Model 14
2.2.4 The Three Dimensional Square Shroud Model 14
2.2.5 The Cylindrical Shroud Design and Results 15
2.2.5.1 Cylindrical Shroud Design 16
2.2.5.2 Cylindrical Shroud Results 16

2.3 Advantages and Limitations of the Technology 18

3.0 Performance Objectives 19

3.1 Objective: Production Rates 19

3.1.1 Metric 19

3.1.2 Data Required 19
3.1.3 Success Criteria.....20
3.1.4 Results.....21

3.2 Objective: Autonomous Recoveries 21

3.2.1 Metric.....21
3.2.2 Data Requirements.....21
3.2.3 Success Criteria.....22
3.2.4 Results.....22

3.3 Objective: Successful Remote Excavation 22

3.3.1 Metric.....22
3.3.2 Data Requirements.....22
3.3.3 Success Criteria.....23
3.3.4 Results.....23

3.4 Objective: Remote Certification Targets for Recovery 23

3.4.1 Metric.....23
3.4.2 Data Required 23
3.4.3 Success Criteria.....24
3.4.4 Results.....24

3.5 Objective: Operate in Varying Weather and Sea Conditions 24
3.5.1 Metric.....24
3.5.2 Data Required 24
3.5.3 Success Criteria.....25
3.5.4 Results.....25

4.0 Site Description.....26

4.1 Site Selection 27

4.2 Site History 27

4.3 Site Geology.....27

4.4 Munitions Contamination 28

5.0 Test Design 29

5.1 Conceptual Experimental Design 29

5.2 Site Preparation.....29

5.3 System Specification 29
5.4 Calibration Activities 30
5.5 Data Collection 31
5.6 Validation 31
6.0 Analysis Plan 32
6.1 Preprocessing 32
6.2 Target Selection for Detection 32
6.3 Parameter Estimates 32
6.4 Classifier and Training 32
6.5 Data Products 32
7.0 Performance Assessment 33
7.1 Objective: Production Rates 33
7.2 Objective: Autonomous Recoveries 33
7.3 Objective: Successful Remote Excavation 33
7.4 Objective: Remote Certification of Targets for Recovery 34
7.5 Objective: Operate in Varying Weather and Sea Conditions 34
8.0 Cost Assessment 35
8.1 Cost Model 35
8.2 Cost Drivers 37
8.3 Cost Benefit 37
9.0 Implementation Issues 38
10.0 References 39
APPENDIX A – Points of Contact 41

FIGURES

2-1. This is a schematic diagram showing how the support vessel is set up for a target recovery 3

2-2. The spud assembly with the hand winch is shown 4

2-3. The spud bracket is shown bolted to the deck. The winch is used to raise and lower the spud 4

2-4. Two spud assemblies are shown mounted on the edge of the deck of the pontoon boat. The hand-operated winches are used to raise and lower the spuds to stabilize the boat 4

2-5. The spud assemblies are shown deployed on the recovery vessel. Note the four function crane mounted between the spuds 4

2-6. The shroud assembly shown with the poles installed 5

2-7. The shroud is shown with the dredge assembly mounted 5

2-8. The Suction Dredge 6

2-9. The Water Jet 6

2-10. These images show the deployment of the suction dredge assembly. The water jet is not shown in the image and the water supply and ejection hoses are not shown 6

2-11. This image shows the centrifugal pump that is used to power the vacuum Dredge and the water jet 7

2-12. The underwater video camera is shown. A ring of LEDs surrounds the lens 8

2-13. This image shows the submergible components of the DIDSON sonar imaging system 8

2-14. Electromagnet mounting configurations 9

2-15. Electromagnet Recovery System lifting an 81 mm mortar 9

2-16. A 12 in electromagnet from Walker Magnetics is shown 10

2-17. False color image of the flux density surrounding the 12 in Walker Electromagnet 11

2-18. This image shows the Walker CER 12 electromagnet capturing a 155 mm projectile 11

2-19. Square shroud failure model at 28.1 ms time step in 3D simulation of detonation of 0.4 lb of TNT 15

2-20. Square shroud failure model at 20.2 ms time step in 3D simulation of detonation of 4.0 lb of TNT 15

2-21. The cylindrical shroud design 16

2-22. Cylindrical shroud failure model at 16.5 ms time step for detonation of 0.4 lb of TNT 17

2-23. Cylindrical shroud failure model at 9.3 ms time step for detonation of 4.0 lb of TNT 17

4-1. Dock at Lake Crabtree 26

4-2. Aerial photograph of Lake Crabtree 26

4-3. Aerial photograph of the dam and Jordan Lake 27

5-1. Divers are shown preparing to investigate a target following the 2005 MTA demonstration. Note the white flag and pole marking the target position immediately behind the skiff 29

5-2. The four-function hydraulic crane from Steelhead Marine is shown 29

5-3. The spuds are shown deployed on the pontoon boat 30

TABLES

2-1 Lifting Capacity of Several Walker Electromagnets 10

2-2 Ordnance Explosive Weight Summary.....13

3-1 List of Performance Objectives 20

8-1 Cost Model for a Field Recovery Operation using the Automated Underwater Retrieval System 36

ACRONYMS

ANSI	American National Standards Institute
BDU	Bomb Demonstration Unit
BRAC	Base Realignment and Closure
CERCLA	Comprehensive Environmental Response, Compensation, and Liability Act
COTS	Commercial Off-The-Shelf
CTT	Closed Transferred and Transferring
DIDSON	Dual-Frequency Identification Sonar
DoD	Department of Defense
EE/CA	Engineering Evaluation/Cost Analysis
EOD	Explosive Ordnance Disposal
ESTCP	Environmental Security Technology Certification Program
FEA	Finite Element Analysis
ft	foot
FUDS	Formerly Used Defense Site
GFE	Government Furnished Equipment
GPS	Global Positioning System
in	inch
IPR	In Progress Review
lb	pound
LED	Light Emitting Diode
m	meter
MEC	Munitions and Explosives of Concern
mm	millimeter
MMRP	Military Munitions Response Program
MRP	Munitions Response Program
ms	millisecond
MTA	Marine Towed Array
MTADS	Multi-sensor Towed Array Detection System
NDCEE	National Defense Center for Environmental Excellence
SERDP	Strategic Environmental Research & Development Program
SUXOS	Senior UXO Supervisor
TNT	trinitro-toluene
yd	yard

EXECUTIVE SUMMARY

The objective for this project was to design, build, and demonstrate a semi-automated system to provide an efficient, relatively economical, and safe approach for recovering single unexploded ordnance (UXO) targets in shallow water that are buried to deeply in the sediment layer to be recovered by a diver having access only to hand tools. For the purposes of this project, we assume than an underwater UXO survey, analysis, and preparation of a target list has been completed, and that individual target positions have been reacquired for investigation and marked either with flags (very shallow water) or with weights and floats. After the targets have been marked, the recovery process begins.

A work boat is anchored adjacent to the target; it is stabilized by two spuds that are driven into the sediment. A deck crane us used to lower a cylindrical fiberglass shroud onto the target position and a remotely operated water jet/vacuum dredge is used to excavate the sediment from the hole to expose the target. The target is remotely examined using either a TV camera or an imaging sonar system to determine the target's identity and its fuzing. If a supervisory UXO technician determines that the target is safe to recover, it is remotely retrieved using an array of electromagnets.

The project was preceded by an extensive finite element analysis (FEA) modeling study to predict the effects that would result from an unintended detonation of a dud UXO within the shroud. It was concluded that any detonation involving more than 0.4 lb of high explosives would destroy the shroud and all ancillary equipment within the shroud.

All mechanical components for the field operational demonstration were then purchased, (or adapted from equipment associated with other projects), or fabricated and then integrated. The various subsystems were tested in the laboratory and in field shakedown studies at local lakes. A Test Plan was developed based upon the assumption that the demonstration would take place on the Currituck Sound on a bombing range near Duck, NC. As we approached final approval of the Test Plan, it was determined that insufficient funds remained in the project to support the full-scale demonstration and completion of the required reports.

As an alternative to the Currituck Sound demonstration, several days of field tests were conducted using the complete system on local lakes (using only inert and surrogate ordnance). These studies were conducted using day trips and without the expensive support of UXO dive teams. All major system components were strenuously tested and evaluated against the planned field demonstration objectives.

The support vessel (anchoring systems, winches and spuds, and deployment and retrieval systems) operations were completely successful. The shroud deployed well, the vacuum dredge and water jet were very efficient in excavating within the shroud in a variety of sediment types. The electromagnet array retrieval system operated flawlessly, meeting all project goals. The TV camera visualization system (along with the water clarification system) uniformly failed to operate adequately to identify unknown ordnance and/or to determine its fuzing. This was exacerbated by water visibility of <3 in however, the TV optics design and lighting system were also determined to be of an inappropriate design for this task. The Duel-Frequency Identification

Sonar (DIDSON) system, which might have accomplished the visual recognition tasks also failed because the plastic beam former lenses in the system had dried out and degraded from several months of non-use. There were insufficient funds available to rebuild the optical system of the sonar.

Overall, most components of the system worked well. The entire system might operate successfully in water with significantly better visibility. The TV and sonar beam former should be redesigned and rebuilt before another demonstration is attempted.

1.0 Introduction

1.1 Background

As a result of past military training and weapons testing activities, residual UXO is present at sites designated for Base Realignment and Closure (BRAC), at Formerly Used Defense Sites (FUDS), on currently-active training ranges, on private lands and marine resource and recreational areas adjacent to current and former ranges. Many of the sites associated with military practice and test ranges contain significant marine areas.

The National Defense Center for Environmental Excellence (NDCEE) has released[1] a report reviewing and summarizing the current state-of-the-art in modern UXO remediation technologies. This report focuses upon remotely operated and automated retrieval technologies with the intent of emphasizing safety and reducing UXO recovery costs. The only technologies cited for underwater applications involve either remotely operated underwater vehicles (intended for operation at significant depths) or surf zone/beachcomber systems for shoreline applications. None of the cited approaches assumes either that digital geophysical UXO surveys have been conducted or that retrieval of specific targets with known coordinates is an objective. On shore UXO target recoveries (in benign environments) typically cost ~$200 per dug target using commercially available technologies. Recovery of the same targets in shallow water offshore costs 5-8 times more. Currently underwater UXO remediation requires hands-on, UXO-qualified diver intervention.

The currently used approach for underwater UXO retrieval requires a team of divers to manually locate and remove each individual target. The process begins with the dive team re-acquiring the target position from a boat using a hand held Global Positioning System (GPS). The target location is then marked using a weight and buoy or a rigid pole with a flag. An underwater metal detector is then used by a diver to reacquire the magnetic anomaly and refine the buoy placement.

After the target has been marked from the surface, the diver enters the water with an underwater magnetic sensor to precisely locate the target. Once the target is located, the diver begins the investigation and recovery process. Either using his hands or hand tools, he uncovers the item. Targets buried more than ~1.5 ft typically cannot be successfully recovered using this approach regardless of whether the bottom sediments are sand, shell, silt/mud, or clay. Divers typically have access only to small military-style entrenching hand tools. Excavation sidewalls routinely collapse into the excavation if it is deeper than about 1 ft. For shallower buried objects, after the target is uncovered, the diver identifies the target visually if possible, or by feel if visibility is limited. The UXO supervisor then determines if the item can be safely moved or whether it must be blown in place. In typical UXO marine environments, it is often impossible (or impractical) to investigate or recover more than half of the magnetic anomalies discovered in modern digital UXO geophysical surveys.

1.2 Objectives of the Demonstration

The objective for this project was to design, build, and demonstrate a semi-automated system, to provide an efficient, relatively economical, and safe approach for use in recovering single UXO targets in shallow water (<15 ft).[2] In this project, our approach has been addressed by combining technologies based upon COTS components to create an integrated system that can semi-autonomously uncover UXO buried in marine sediments, visualize the uncovered target (using TV and/or imaging Sonar), and remotely recover the target to the surface using an electromagnet or a mechanical grapple. Current underwater UXO recovery operations typically involve Explosive Ordnance Disposal (EOD) or commercial UXO divers precisely locating the positions of a metallic object with a metal detector, then uncovering the targets using hand tools. The identity and fuzing of the target is determined either by sight or by feel. Small targets can be brought to the surface by the diver, while larger targets require lift bags or winches to break them free of the sediment and raise them to the surface.

For this demonstration, it was our intention to use our new system to investigate and recover UXO targets from the Currituck Sound adjacent to a former test range, the Former Duck Naval Target Range. We have previously surveyed the offshore area involved in this demonstration and at the time of the original survey recovered 100 underwater targets.[3-6]

1.3 Regulatory Drivers

The regulatory issues affecting the UXO problem are most frequently associated with the BRAC and FUDS processes involving the transfer of Department of Defense (DoD) property to other agencies or to the civilian sector. When transfer of responsibility to other government agencies or to the civilian sector takes place, the DoD lands fall under the compliance requirements of the Superfund statutes. Section 2908 of the 1993 Public Law 103-160 requires adherence to Comprehensive Environmental Response, Compensation, and Liability Act (CERCLA) provisions. The basic issues center upon the assumption of liability for ordnance contamination on the previously DoD-controlled sites.

The vast majority of the marine areas contaminated by UXO are in public waters. These areas may (or may have been) restricted to public access when the ranges were active. Often UXO contamination results from undershoots or overshoots of land targets. In other typical situations, marine impact areas involve public waters, which are only temporarily closed when a range is active. If the areas involved are part of the Military Munitions Response Program (MMRP) or Munitions Response Program (MRP), the primary service responsibility is defined. In either case, CERCLA provisions apply and state and federal regulatory agencies, as well as citizen groups are stakeholders in the investigation and cleanup operations.

This project demonstration, which was originally scheduled to take place in the Currituck Sound adjacent to the former Duck Naval Bombing Range would not have triggered regulatory issues because it is in public waters and not part of a FUDS or BRAC site. Because of financial constraints the technology demonstration took place in Jordan Lake in public waters and did not employ either inert ordnance or ordnance shapes.

2.0 Technology

2.1 Technology Description

The objective for this project was to design, build, and demonstrate a system, which is relatively efficient, economical and safe for recovering single UXO targets in shallow water. For the purposes of this project, we assume than an underwater UXO survey, analysis, and preparation of a target list has been completed, and that individual target positions have been reacquired for investigation and marked either with flags (very shallow water) or with weights and floats. After the targets have been marked, the recovery process begins. The target recovery process is accomplished by combining several component technologies to create a system to uncover the UXO buried in the sediment, visualize the uncovered target (using TV and/or sonar imaging), and remotely recover the target to the surface using an electromagnet or a mechanical grapple. Detailed descriptions of each of these components is provided below.

2.1.1 Spud Design and Operation

To keep the position of the recovery vessel stable along side the flag or buoy marking the re-acquired target, the vessel is positioned as shown in Figure 2-1. Anchor points are established and the boat position is adjusted using hand winches on the boat to adjust the length of the anchor lines.

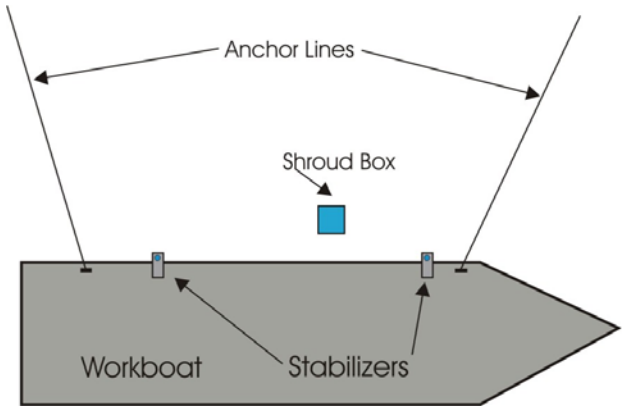

Figure 2-1. This is a schematic diagram showing how the support vessel is set up for a target recovery.

After the workboat is positioned adjacent to the target marker, the stabilizing spuds shown in Figures 2-2 and 2-3 are lowered into the bottom sediment to further stabilize the position of the vessel and keep it in place during the recovery operation. The spuds also keep the deck flat and level as equipment is deployed over the side. The spuds are constructed of square structural fiberglass tubing with flat pads mounted on the bottom. They are raised and lowered using hand winches mounted on each spud assembly. The structural fiberglass tubing for the spuds is 4” x 4” square tubing, 20 ft in length. This limited the operational depth for this demonstration to ~15 ft. An image of the deployed spuds is shown in Figures 2-4 and 2-5.

The mounting brackets for the spuds are bolted through the deck into the structural members of the vessel. The mounting brackets are hinged to allow them to be tilted for installation and removal of the spuds and for moving the boat between targets.

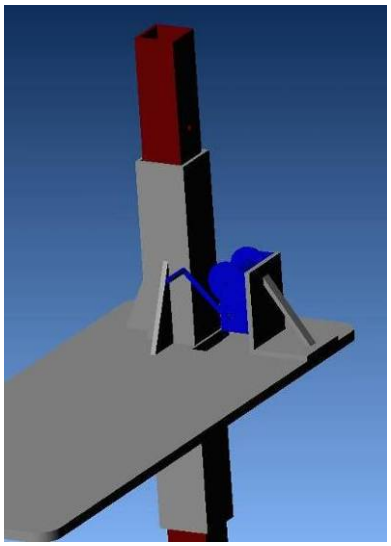

Figure 2-2. The spud assembly with the hand winch is shown.

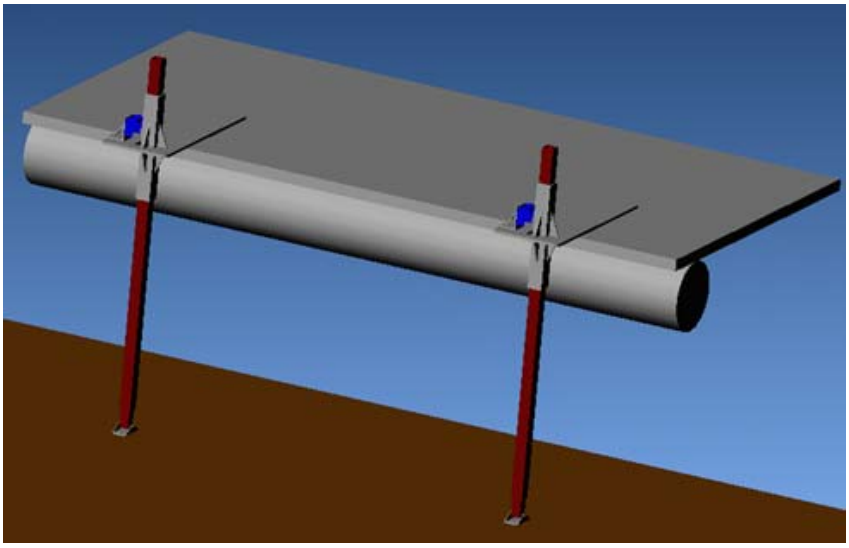

Figure 2-4. Two spud assemblies are shown mounted on the edge of the deck of the pontoon boat. The hand-operated winches are used to raise and lower the spuds to stabilize the boat.

Figure 2-3. The spud bracket is shown bolted to the deck. The winch is used to raise and lower the spud.

Figure 2-5. The spud assemblies are shown deployed on the recovery vessel. Note the four function crane mounted between the spuds.

Once the boat is positioned, and the spuds are deployed, the shroud is lowered into the water using the hydraulic crane (Figure 2-5). At this point, the recovery process can begin. Two additional fixtures are used to uncover the buried target and to remove the target from the water. These assemblies are described below. The recovery vessel for this project is the 30 ft pontoon boat acquired in the Marine Towed Array (MTA) project (MM2003-24).[3]

2.1.2 The Recovery Shroud

Once the positioning of the recovery vessel has been stabilized beside the target marker, the recovery shroud is lowered over the target. A model and photo of the shroud are shown in Figures 2-6 and 2-7. The primary functions of the shroud are to prevent sediment from returning to the hole as it is being excavated and to prevent the excavated walls from slumping back into the hole. Additionally, the shroud provides a shield to allow the water within the shroud to be filtered to improve visualization of the target. The shroud was redesigned after an FEA modeling study as a simpler-design low cost fixture, to perform the functions described above. The shroud design is a 48 in diameter cylinder, 30 in height, with a 0.75 in wall thickness. It is a fiberglass composite weighing approximately 225 lbs. This is heavy enough to cause the shroud to settle into the hole as the sediment inside is excavated. The diameter of the shroud was made 4 ft in diameter to allow enough room for a diver (if it is necessary) to enter the shroud to examine the target before a recovery decision is made.

To assist with the positioning of the dredge assembly and the lift platform, circular fiberglass tubing is attached to the outside wall of the shroud, Figure 2-7. Long fiberglass poles are set into these fixtures. Their length extends upward beyond the water surface, Figure 2-6. The length of the tubing is adjustable, depending on the water depth.

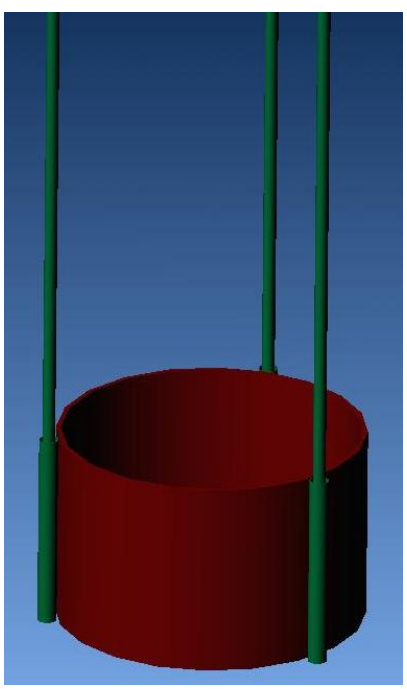

Figure 2-6. The shroud assembly shown with the poles installed.

Figure 2-7. The shroud is shown with the dredge assembly mounted.

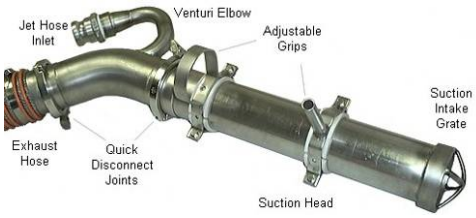

Figure 2-8. The Suction Dredge.

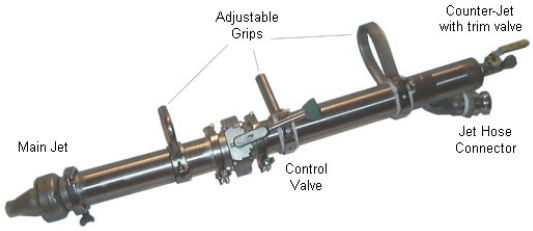

Figure 2-9. The Water Jet.

2.1.3 Dredge Assembly

Once the shroud is in place, the next step in the recovery process involves uncovering and identifying the buried target. This is carried out using the vacuum dredge(Figure 2-8) to remove the sediment covering the target. A water jet (Figure 2-9) is paired with the dredge. Its function is to break up the sediment, as required. The vacuum dredge has a 4 in suction intake; an attached hose diverts the removed sediment material allowing it to be ejected well away from the work site. The dredge is designed to remove sediment at a rate of 10-12 yd^3 per hour.

The dredge assembly consists of both the vacuum dredge and water jet mounted as a single unit. The grips were removed from each of them and brackets were built to mount them side-by-side together so that they point at the same contact area of the sediment surface. The assembly is mounted to the side of the shroud, Figures 2-7 and 2-10.

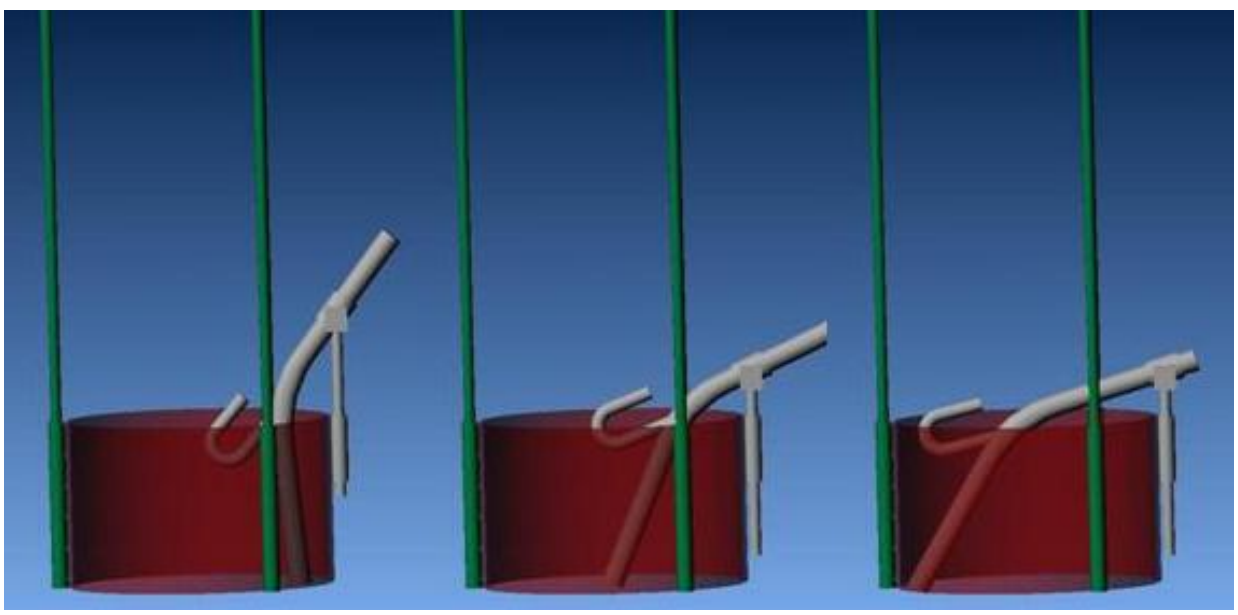

Figure 2-10. These images show the deployment of the suction dredge assembly. The water jet is not shown in the image and the water supply and ejection hoses are not shown.

The assembly attachment has a 3 axis rotation mount that allows the entire internal area within the shroud to be excavated. The control of the dredge assembly was originally intended to be constructed using a powered pan-tilt unit for rotation, and a hydraulic cylinder for

controlling the height. Because of budget limitations, the control system was ultimately redesigned to be operated manually from the surface using three dock lines.

The vacuum dredge and the water jet are powered by a 500 gallon per minute centrifugal water pump driven by a 9 hp Honda gasoline engine. See Figure 2-11. The pump is designed to sit on the boat deck. All hose connections are made using quick-connects. The same water supply powers both the dredge and the water jet. A three way valve allows water to be directed to either the dredge or the water jet individually or to both simultaneously. The water jet (adjustably) directs a stream of water both forward and backward so that the overall forces are neutralized during operation.

Figure 2-11. This image shows the centrifugal pump that is used to power the vacuum dredge and the water jet.

2.1.4 Television Camera

After completion of the dredging, the target is examined using a video camera (Figure 2-12) or the DIDSON high frequency imaging sonar system (Figure 2-13). The video camera is equipped with LED lights and has a fixed focus that extends from 1 in to ∞.

The DIDSON system[7] was acquired in association with the ESTCP Project MM2003-24. Resolution of 1 cm can theoretically be achieved by this system. The imaging sonar is intended to be used as an alternative to the TV imaging system if the water cannot be filtered enough to accurately identify the target with the television camera.

Once the target has been identified and its fuzing determined using the imaging tools, a UXO-certified technician determines whether the target can be safely recovered. If the technician determines that the target is too dangerous to mechanically recover, the target will be marked for referral to a Naval EOD Detachment for disposal. For targets that are evaluated as safe to recover, the target will be brought to the surface using the electromagnet recovery fixture described in the next section.

Figure 2-12. The underwater video camera is shown. A ring of LEDs surrounds the lens.

Figure 2-13. This image shows the submergible components of the DIDSON Sonar Imaging System.[7]

2.1.5 The Recovery Assembly

After the target has been uncovered, and determined to be safe to recover, the dredge assembly is removed from the shroud (to the deck of the boat) and the electromagnet recovery assembly is lowered into the shroud to capture the target. An illustration and photo of the recovery assembly are shown in Figures 2-14 and 2-15.

Two 10 in electromagnets are mounted on a spreader beam. The recovery assembly is lowered into the shroud over the exposed target. The electromagnets are activated to lift the target from the bottom surface. The recovery mounting assembly is smaller than the shroud diameter to allow side to side movement once the assembly is lowered into the shroud. This ensures that the electromagnet assembly can be located in the position required to lift the target off the bottom surface. The spacing of the electromagnets can be adjusted on the spreader beam depending on the size of the target being recovered.

Targets that cannot be recovered using the electromagnets are recovered using a hydraulic grapple.

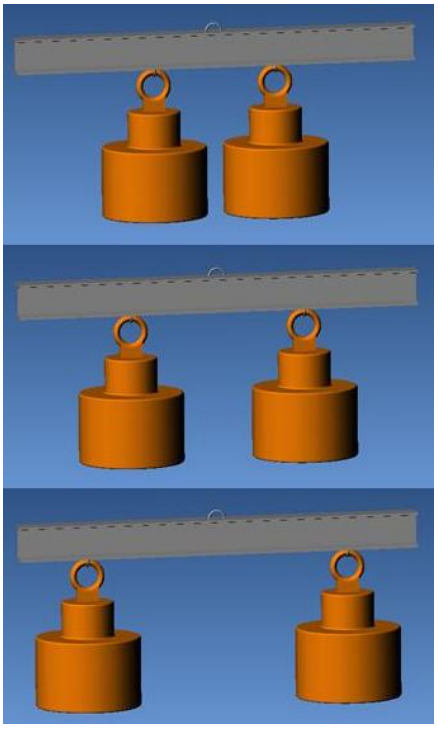

Figure 2-14. Electromagnet mounting configurations.

Figure 2-15. Electromagnet Recovery System lifting an 81mm mortar.

2.1.5.1 Electromagnets

The recovery assembly incorporates a pair of electromagnets mounted on a spreader beam. It is lowered into the shroud as described above. Commercial off the shelf (COTS) flat faced solid core solenoid magnets were purchased for this project. The units were specially sealed at the factory for use under water. These types of magnets have been used for years in commercial applications because their lifting capacity is many times their own weight. Table 2-1 lists the published lifting capacity for the 7, 9, and 12 in diameter CER series magnets manufactured by the Walker Magnetics Group.[8]

Table 2-1. Lifting Capacity of Several Walker Electromagnets

	Workpiece (Target) Thickness			
Magnet Diameter	6 mm	13 mm	25 mm	51 mm
7 in	82 kg	250 kg	209 kg	409 kg
9 in	91 kg	272 kg	817 kg	908 kg
12 in	91 kg	454 kg	1361 kg	1576 kg

The cited lifting forces are for (American National Standards Institute (ANSI) 1020) steel plate of the specified thickness, with an irregular or rough surface. The lifting force of an electromagnet falls off exponentially as a function of distance between the pole face and the ferrous target. Because UXO are irregularly shaped and have relatively thin walls, the electromagnet lifting capability for individual ordnance items is not easily calculated as a function of distance, shape, and orientation.

The electromagnet lifting force primarily depends on the target material composition and wall thickness, and the target shape, position and orientation relative to the face of the magnet. To effectively use the electromagnet for UXO recovery requires that we be able to position the magnet close to the target to capture it. The force required to capture the target may be increased because of the load of sediment that may be covering part of the target, as well as the shear forces required to break the target free from the sediment.

To evaluate the field strength and field patterns of a typical industrial electromagnet, we used a 12 in diameter CER magnet from Walker Magnetics. The magnet shown in Figure 2-16 is a self-contained unit with an integral power supply and switching capability. For the laboratory tests, the magnet was suspended above the floor using a gantry crane, and a test jig was constructed to perform the magnetic flux density measurements. Measurements were taken using an Alphalab, Inc., Model #DCM DC gauss meter. This unit has a linear response over the range of ±20 kgauss and is accurate across the full range to within ±2%. The measurements were taken on a 5 cm grid from 35 cm above the pole face to 55 cm below. Measurements extended 40 cm to both the left and right of the pole face centerline.

Figure 2-16. A 12 in electromagnet from Walker Magnetics is shown.

The results from the flux density measurements are plotted as a false color interpolated image in Figure 2-17. The largest flux density readings were made flush with the pole face at a distance of 9 cm off the centerline of the magnet. The flux density at the pole face varied from 1,220 gauss on the centerline to 2,400 gauss at 9 cm off the centerline. At 10 cm below the pole face, the flux density fell to ~10% of the maximum value.

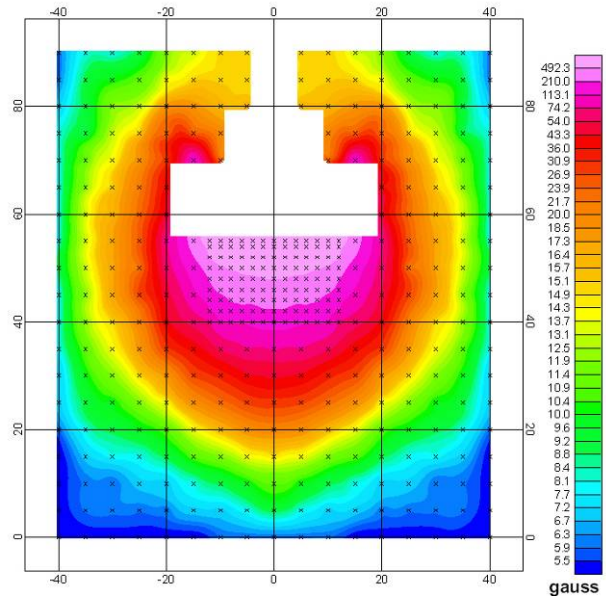

Figure 2-17. False color image of the flux density surrounding the 12 in Walker electromagnet.

Laboratory tests were also performed to determine the ability of the magnet to capture and lift a series of inert ordnance items. These tests were completed in air with the ordnance lying flat on the floor. For these tests, the magnet was energized and then lowered to the point that it captured the ordnance, lifting it from the floor. Ordnance items varying in size from 20 mm to 155 mm projectiles were evaluated, and all were successfully captured and lifted by the electromagnet. The lifting of the 155 mm projectile using the CER-12 Electromagnet is shown in Figure 2-18. The 155 mm projectile was typically captured by the electromagnet at separation of approximately 15 cm. The magnet was able to capture the smaller ordnance items, from greater heights. This was however, dependant on their positioning and orientation. The 2.75 in warhead, and 60 mm mortar were typically captured at distances of 25 cm and 30 cm when lying flat on the floor.

From these experiments it is undetermined whether ordnance significantly larger than a 155 mm projectile could be lifted with a single magnet. While suspended from the magnet, it took ~75 pounds of downward force to break the 155 mm projectile loose from the magnet. We have confidence that ordnance the size of a 155 mm projectile or smaller can be lifted from underwater bottom sediments with this magnet, if the magnet can be brought into near contact with the target.

During the course of this project, on several occasions concerns were raised about an electromagnet potentially triggering a dud fuze, which failed to function during its initial flight and impact. We extensively addressed this issue in two separate White Papers developed during the project. Below we summarize the conclusions reached in the White Papers.[9,10] To begin with, we assert that this same type of decision must regularly made by the EOD or UXO technicians each time they discover or uncover a buried ordnance item. A decision to

Figure 2-18. This image shows the Walker CER 12 electromagnet capturing a 155 mm projectile.

move a target or to blow-in-place must be made for each target. The decision is made based upon the type of ordnance, its fuzing, and its overall condition. In our project the UXO technician, using the camera or sonar images determines the identity of the object, its fuzing, if it is high explosive filled, and its overall condition. The majority of UXO we encounter on bombing ranges are clearly inert: M23s, M38s, M117s, M78s/BDU33s, GP bomb shapes with no fuses, etc. If these objects can be identified on the range, they are candidates for electromagnetic retrieval. Other ordnance, such as projectiles determined to have mechanical time delay fuses, powder train delay fuses, etc., are also candidates for magnet retrieval.

Some ordnance however, are so badly corroded or encrusted, that it is not possible to identify them or establish their fusing. Ordnance items that cannot be precisely identified are not candidates for electromagnetic retrieval. The UXO supervisor has the option of specifying that the mechanical grapple be used to retrieve the object, that it be hands-on inspected by a diver, or that it be left in place and marked for later disposition by a Naval EOD Detachment. For the purposes of this Environmental Security Technology Certification Program (ESTCP) demonstration project it was established that no fuzed ordnance of any type would be lifted by electromagnet.

2.2 TECHNOLOGY DEVELOPMENT

The initial task in this project involved the development of a Safety and Environmental Risk Assessment Report on the effects to the recovery shroud of an unintentional ordnance detonation during the recovery process.[11] The primary intended purpose of the shroud was to provide a barrier to prevent the nearby sediments from slumping into the area that is being excavated by the dredge assembly. As a secondary consideration during the initial design of the shroud, we attempted to build in design features in the shroud to provide some protection against unintended detonations by diverting some of the energy of a detonation away from the recovery vessel. To provide this protection we designed the walls of the shroud to be built of a very strong Kevlar composite and provided a ¼ in Plexiglas break-away wall in the shroud on the side opposite to the recovery vessel.

To analyze the blast affects, Mallett Technology[12] was contracted to perform Finite Element Analysis (FEA) simulations of various sized detonations on the shroud and the recovery equipment. These simulations were performed using Autodyn® by Century Dynamics, which is a FEA package for modeling the non-linear dynamics of solids, fluids, and gas and their interactions.

The FEA simulations were divided into a three phase approach:

- Phase 1: A two dimensional axially-symmetric model of an explosive device was developed and implemented.
- Phase 2: The two dimensional model was expanded to three dimensions and the detonation performance of the model of the explosive device and the shroud was carried out.
- Phase 3: A full three dimensional model of the explosive device, the shroud and all the recovery equipment was developed and run (Phase 3 was not completed).

The purpose of the first phase was to generate a quick two dimensional solution to allow for easy refinement of the model. The second phase produced a more realistic three dimensional result of the blast effects on the shroud, while the third phase would have incorporated the recovery equipment to determine any the affects on the recovery system components.[11]

2.2.1 Simulations Inputs

The ordnance model for these simulations was an uncased solid cylinder of trinitro-toluene (TNT). The amount of TNT for typical projectile sizes was determined as input for these simulations. Using the results from our laboratory studies with electromagnets we decided that the 105 mm would be the largest projectile simulated for this project. Actually, all mortars and most projectiles have been manufactured with a range of quantities and types of explosive fillers. To reduce the complexity of the model, the casing of the projectile was not included in the ordnance model. Only the damage from the blast and resulting shock were analyzed.

2.2.2 The Explosive Model

To determine the amount of TNT to incorporate into the model, we canvassed the US government ordnance data website.[13] The explosive weights for 60 mm, 2.75 in, 81 mm, and 105 mm ordnance items were compiled. Only items that contain high explosive material are included. Smoke and illumination rounds, etc. are excluded. The average, minimum, and maximum weight of explosive in each ordnance item was determined. The results are shown below in Table 2-2.

Table 2-2. Ordnance Explosive Weight Summary

	Explosive Weight			
	60 mm	**2.75 in**	**81 mm**	**105 mm**
Average (lb)	0.5	2.3	2.4	4.9
Max (lb)	0.8	4.9	4.4	15.4
Min (lb)	0.4	0.9	1.2	1.0
Count	3	5	11	16

These data were used to determine the amount of TNT used to simulate the unintended explosion during the recovery process. For the modeling study,[14] two explosive sizes were chosen, 0.4 lbs and 4.0-lbs. Modeling parameters were also taken into consideration when selecting the explosive weight. The TNT explosive properties from the internal Autodyn® library was used for the simulations.

2.2.3 The Two Dimensional Shroud Model

The first simulation was based upon a two dimensional axially-symmetric model. This model can only produce cylindrical results. This initial simulation was intended to provide a quick estimate of the survivability of the shroud. The model was created with a water domain radius of 8.0 m, a water depth of 3.0 m, and an air domain height above the water surface of 3.0 m. The explosive was an uncased cylinder of TNT.

Because the initial intended shroud design was square, and the axially-symmetric model could only produce a cylindrical model, only basic information could be extracted from this solution. The results for the explosive device model was useful as input for more complex models, so the shroud was removed from additional 2D simulations. The additional 2D simulations were performed to continue development of the model domain, and the explosive device model. These simulations did not include the recovery shroud or recovery equipment. This 2D axial symmetric model was created to determine the pressure and TNT cavity results immediately after the detonation. These results were used as input to the remaining more complex simulations. The results from these models were run in discrete steps up to 0.20 ms after the explosion. These results were mapped into more complex models to reduce computational time.

2.2.4 The Three Dimensional Square Shroud Model

After completion of the 2D modeling, the results were used to start the detonation and map the complete solution at 0.20 ms into the three dimensional model. Taking advantage of symmetry only half of the system was modeled. The water domain for the 3D model had a depth of 4.5 m and a width of 4 m. The air domain had a height of 1.5 m.

The shroud model was built using a height of 3 m, a width of 1.24 m and a wall thickness of 20 mm for the Kevlar composite. The composite walls were constructed of twenty individual layers, each 1 mm thick. The internal Autodyn® library was used for material properties for the Kevlar composite.

An opening was placed on the side of the shroud starting at 200 mm above the bottom of the shroud. The opening was square, with a height and width of 1.2 m. A Plexiglas plate 10 mm thick was placed over this opening. A Kevlar plate 1.2 m x 1.2 m also 20 mm thick was created and inserted into the model to represent the recovery system mounting plate. This was added to the 3D model. The material properties for this plate were identical to those of the previous model.

Analyzing the results from the initial set of 2D and 3D simulations, which were performed using 4.0 lbs and 0.4 lbs of TNT; it was conclusively shown that the square shroud with Plexiglas weak wall does not survive either the small or the large detonation.[11] The 4.0 lb TNT simulation was completed to simulate the accidental detonation of ordnance including 81 mm mortars and 105 mm projectiles. After reviewing these results it was decided the next step would be to simulate recovery of a smaller item. A smaller 60 mm projectile was selected. A

typical amount of explosive in the 60 mm projectile is about 0.4 lbs. The smaller amount of explosive resulted in a less damage to the shroud than the explosion from the 4.0 lbs of TNT. In both cases, however the shroud experienced complete failure and deformation from the explosion. The weak wall did not perform as originally expected and appeared to actually hurt the overall performance of the shroud. The portion of the shroud wall that was removed to insert the weak wall, reduced the strength of the Kevlar shroud to withstand the blast. The small strip of Kevlar underneath the weak wall was not enough to keep the square shroud from failing and deforming after the detonation. For these simulations the shroud was constructed in a particularly robust manner with many layers of Kevlar carefully laid up in the strongest design. The overall shroud, as designed for these simulations would weigh over 1,000 lb and would likely be prohibitively expensive to construct because of the materials cost for the Kevlar. The results for these two models are shown in Figures 2-19 and 2-20.

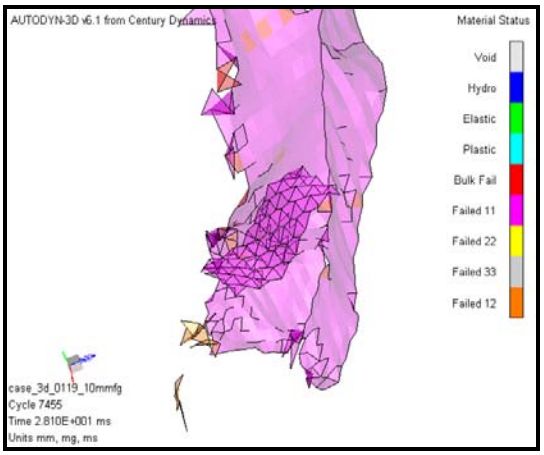

Figure 2-19. Square shroud failure model at 28.1 ms time step in 3D simulation of detonation of 0.4 lb of TNT.

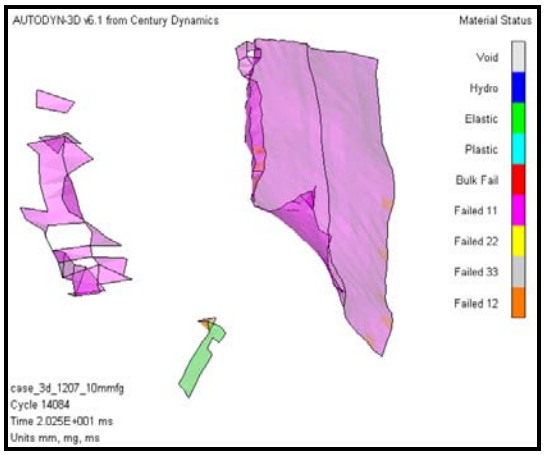

Figure 2-20. Square shroud failure model at 20.2 ms time step in 3D simulation of detonation of 4.0 lb of TNT.

2.2.5 The Cylindrical Shroud Design and Results

The original design of the recovery shroud was square to ensure the weak wall would be positioned away from the boat during the recovery process. The results from the simulations of the square shroud with the weak wall demonstrated that the weak wall was not effective in directing the blast away from the boat and that the square shroud could not withstand the pressure wave generated by an unintended detonation of any practical size. A stronger shroud design was needed if it were intended to provide any useful protection from a detonation. Once it was determined that the shroud with a weak wall was not a functional design, the next step we took was an investigation using a completely cylindrical shroud. The cylindrical design with the same wall thickness, increases the strength of the shroud and decreases the amount of Kevlar required and the overall weight of the shroud. A cylindrical design is also be easier to construct and less expensive to manufacture.

A cylindrical design eliminates the pressure concentrations in the corners that we observed in the performance of the square shroud. The detonation wave is equally distributed along the entire surface of the cylindrical shroud circumference.

2.2.5.1 Cylindrical Shroud Design

The cylindrical shroud design has a similar overall size as the square shroud; it has a height of 3.0 m, a wall thickness of 20 mm, and a diameter of 1.24 m, Figure 2-21. The other design parameters remained the same. The cylindrical shroud was intended to operate using the same recovery equipment (dredge, camera, electromagnets, etc) as the square shroud design, with design modifications necessary for mounting the dredge and electromagnet assemblies.

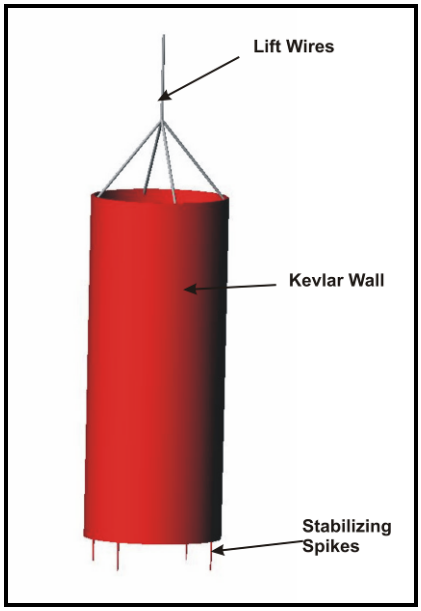

Figure 2-21. The cylindrical shroud design.

To determine the effect of an unintended blast on the cylindrical shroud, an additional set of simulations were performed. The model setup was similar to the simulations for the square shroud. Because of the cylindrical symmetry of this design, the 2D axial symmetric simulations could be used instead of 3D simulations. The results from the 2D simulations were projected into a 3D view to better display the simulation results. With the cylindrical design, performing 3D simulations adds no additional benefit, only additional computational time.

2.2.5.2 Cylindrical Shroud Results

The simulation results for the cylindrical shroud indicate that this design is significantly stronger than the square shroud; it was predicted to survive the 0.4 lb TNT blast without any damage. The 4.0 lb blast resulted in failure at the bottom of the shroud, although the amount of damage was significantly less than was experienced by the square shroud. Figures 2-22 and 2-23 illustrate the cylindrical shroud at 16.5 ms after detonation of 0.4 lb TNT and at 9.3 ms after the detonation of 4.0 lb of TNT. The results from this modeling study indicate that the Kevlar shroud can be designed to withstand the blast from small ordnance, but the shroud is not effective at containing or redirecting the pressure wave generated from the blast.

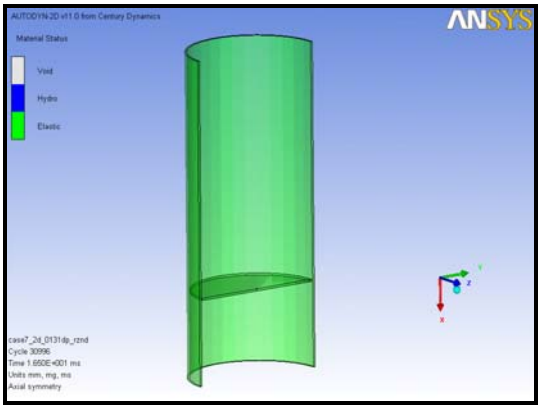

Figure 2-22. Cylindrical shroud failure model at 16.5 ms time step for detonation of 0.4 lb of TNT detonation.

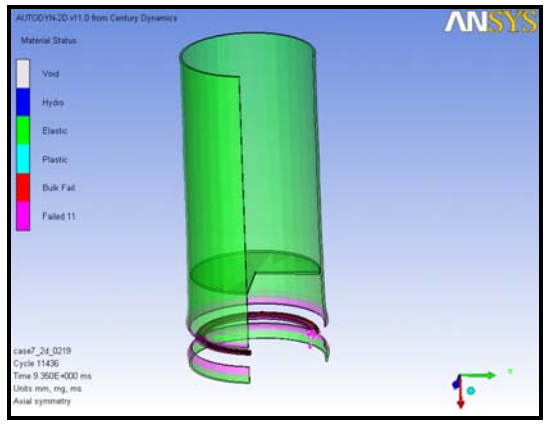

Figure 2-23. Cylindrical shroud failure model at 9.3 ms time step for detonation of 4.0 lb of TNT detonation.

While the cylindrical shroud was more effective at surviving the blast, it was ineffective in containing or redirecting the pressure wave generated by the blast. Neither the square shroud nor the cylindrical shroud significantly damped the pressure wave created by the TNT detonation. In both cases, the pressure wave reached the water surface. This pressure wave could result in damage to the recovery vessel. The likelihood and extent of such damage is undetermined because it was not included as part of this modeling study.

Based upon the results from the modeling study and the comments from the 2007 Winter In Progress Review (IPR), the recovery shroud was redesigned to reduce construction costs and to manufacture a shroud strong enough to prevent evacuated sediment from returning to the excavated hole. The blast protection requirement for the shroud design was eliminated. Once it was determined that the shroud would not be used for blast containment, Phase 3 of the modeling study was eliminated.

The objective of the final shroud model was to design a low cost shroud, which could sufficiently hold removed sediment back from the excavated hole. The new design consists of a shroud with a 48 in diameter, 30 in height, and a 0.75 in wall thickness. This shroud design weighs approximately 225 pounds. The shroud was manufactured by spinning the fiberglass sheets onto a mandrel to achieve the desired thickness. A vinyl ester resin was used with the following fiberglass make up:

0 degree/warp: 64.1%
90 degree/straight weft: 20.0%
Mat/chopped strand: 14.6%
Remainder: Stitch Yarn

The final shroud design and actual manufactured shroud were discussed in section 2.1.2.

2.3 Advantages and Limitations of the Technology

The traditional method for recovering ordnance underwater requires a team of divers (usually three divers) to manually locate and recover targets. Targets buried much deeper than 1.5 ft are difficult or impossible to retrieve because the sides of the excavated holes slump back into the excavated area. The only implement that a UXO diver typically has is a small entrenching tool. Identification of MEC items and evaluation of their conditions is often carried out only by feel because of visibility limitations. The pay scales for UXO-certified divers are twice that of UXO-certified technicians conducting similar operations on land. Additionally, on land recovery of MEC items that do not require the use of power equipment is typically carried out by a single technician using a shovel.

The advantage of the system that we have developed and demonstrated is that it reduces the amount of time diver intervention is required during UXO recovery. The dredging and lifting was very effective during the shake down testing. This allows targets that were buried so deep that they could not be recovered by a diver to be accessed. This reduces the amount of labor required by the diver, and reduces the amount of time spent in the water.

The major limitation to this technology is difficulty that we have had in the imaging of the targets using the sonar imaging system and the video camera. The filtration system improved the water quality enough to visualize the object from a few inches away. This was not sufficient to view the entire target at the same time and to identify an unknown item or its fuzing. Actual identification of a target required intervention by a UXO diver on all targets that we have studied.

Although the visualization system was unsuccessful during the shakedown testing, improvements to this system are feasible, and could be implemented in a future version of the system. It is unlikely to completely eliminate diver intervention in all cases. However, the results from the shakedown testing indicate that the amount of dive time could be substantially reduced.

More importantly, the use of the vacuum dredge and the water jet with the shroud has allowed us to successfully prosecute targets that could not have been accomplished by a diver using hand tools.

3.0 Performance Objectives

The intent of this project was to conduct an extended full-scale demonstration of the technology on the Currituck Sound adjacent to the Former Duck Bombing Range. It became apparent while the Demonstration Test Plan was under development and awaiting approval that there would be insufficient funds to complete the demonstration and the required final reporting documents. With approval of the Program Office, we suspended the full scale demonstration in favor of a more limited set of shakedown system evaluations on a lake near our offices. These tests were conducted using inert ordnance items from our company inventory.

Although the operations were limited in scope and we did not employ divers to support them, we set them up in a way designed to evaluate, to the extent possible, the system performance that would allow us to confidently predict the response of the system in a full scale demonstration on a former range. In the section below we discuss the system performance relative to the original performance objectives. These conclusions are based on our direct performance measurements in the lake studies and on our extrapolated predictions to how the system would likely perform in a marine environment associated with a real target or bombing range.

The quantitative and qualitative Performance Objectives from the Demonstration Test Plan are tabulated in Table 3-1. For this report, the Results column has been filled in. Detailed narrative discussion of each objective is provided.

3.1 OBJECTIVE: Production Rates

The production rate is a measure of the time that it takes to set up the recovery vessel adjacent to the target, deploy the shroud assembly, dredge out the sediment layer to expose the target, deploy the camera and/or imaging sonar (clear the water at the target interface) and visualize the target to allow the UXO technician to make a decision about the feasibility of recovering the target, to deploy the electromagnet recovery assembly, raise the target for disposal using the chase boat, and secure the recovery vessel to move to the next target.

3.1.1 Metric

The metric is the aggregate time required to complete all the steps enumerated in Section 3.1 above.

3.1.2 Data Required

The time to initially reacquire the targets for prosecution and marking their positions with flags or buoys will be accomplished as a separate step and not counted as part of the recovery production rate. Some targets take longer to prosecute than others because of water depths, burial depths in the sediment, the type of sediment that must be removed, and the weather/wave

Table 3-1. List of Performance Objectives

Performance Objective	Metric	Data Required	Success Criteria	Results
Quantitative Objectives				
Production Rate	Operational Time to Set Up Equipment and Recover a Target	Field Log With Recorded Times For Each Step	Average of 1 Hr Recovery Time Per Target	Estimated to be successful
Achieve Autonomous Recoveries	Complete Operation Accomplished Without Hands-On Diver Intervention	Record frequency and length of diver intervention for each recovery.	<25% of Recoveries Require Diver Intervention	Diver required for visualization
Successful Remote Excavation	Excavation Accomplished From Deck of the Boat	Record if target can be uncovered remotely. Estimate target depth.	Excavation and Recovery of 75% of Targets Buried <2 ft Deep	Estimated to be successful
Remote Certification of Targets for Recovery	Ability to Identify MEC Item and Verify Fuzing From the Deck	MPEG Record of Target Analysis	<25% of Fuzing Analyses Require Diver Intervention	Targets could not be identified using camera or DIDSON
Qualitative Objectives				
Operate in Varying Weather and Sea Conditions	Demonstrate Ability to Position, Stabilize System, and Operate at Sea State 1	Record Sea State and weather conditions for each target.	Successful Operation in Sea State 1 and With Light Rain	Unknown, all tests were completed in ideal weather conditions

conditions. Ideally, a substantial number of targets should be prosecuted that are of a variety of target types, burial depths, sediment types, and under varying weather conditions.

3.1.3 Success Criteria

It was our goal, following completion of a few targets while we advanced on the learning curve, to on average, complete one target per hour. The typical recovery rates for a diver-only recovery operations are about 20 targets per day using 7 men (two 3-man dive crews and a UXO supervisor) and two boats.

For the demonstration in our project, we planned to use a 4 man crew and two boats. The crew consists of one UXO supervisor, and three additional crew members. The recovery equipment was intended to consist of: two boats, (the recovery vessel and a chase boat for marking targets and setting anchors), the recovery shroud, the waterjet and dredge, the video camera and DIDSON sonar imaging system, and the electromagnet recovery system.

3.1.4 Results

During our shakedown testing and local demonstrations, the targets were not buried, they were placed proud on the bottom. Because no ordnance was used, we did not use a UXO-certified technician as one of the group. We also used only one boat. Using one boat made it more difficult to initially set up the anchors and anchor lines upwind of the emplaced targets.

We used the dredge to excavate numerous holes large enough to recover targets buried more than two feet deep. The dredge and water jet operated extremely well both in soft and in crusty sediments. In several instances, we were able to excavate a hole inside the shroud down to a hard rock surface in a matter of a few minutes. The lifting process for the targets using the electromagnets was routine in all cases. The water in the lake where we carried out these studies had a visibility of only a few inches. We were unsuccessful in all cases in establishing a process that would allow us to image the target using the camera or the DIDSON sonar with what we felt would be the required clarity so that a UXO technician would have been able to identify the target and positively establish the fuzing.

In separate experiments on Lake Jordan and Crabtree Lake we set up a jig that allowed us to filter the murky lake water and inject the clear water stream immediately in front of the camera lens. Using this approach, we could clearly image 2 or 3 in areas of the target. We felt after evaluating these results that it would not likely have been possible for the UXO technician (even using this approach) to have remotely made the required target and fuzing decision based upon the images that we were able to either observe in real time or record for review. Working in water with better (1 or 2 ft) visibility remotely visualizing the target may well be more successful. We were unable in our limited demonstration to evaluate this premise, however.

We estimate that in good weather conditions, a typical target recovery process could be successfully completed in less than one hour using two boats and four persons. In the limited time that we had for evaluation, we were not able to work with a wide variety of sediment types or in other than good weather conditions.

3.2 OBJECTIVE: Autonomous Recoveries

3.2.1 Metric

A complete success at an autonomous target recovery would be one in which diver intervention and a hands-on examination of the target in the water is not required for any of the process sub-steps. See Section 3.1.

3.2.2 Data Requirements

We fully expected, based upon the 100 targets recovered in our previous demonstration in Duck that it would not be possible to remotely evaluate targets in many instances. Many of the targets recovered in the previous Duck demonstration were seriously encrusted by marine growth

or were mud covered and could not be evaluated until the diver physically removed some of the crust or scrubbed the mud off the target.

It was our intent in the full scale test plan to evaluate how often this would be the case for the newly uncovered targets. Because most of the targets that we intended to recover in Duck would have been buried a couple of feet deep, they would likely not have had marine encrustations (because they would have existed in an anoxic environment). We would have evaluated whether they could have been cleaned in place of mud using the water jet, thus allowing the UXO technician to remain on the boat deck. This evaluation could not be made in our limited studies on the lake. Even in the full scale test in Currituck Sound this would have been problematic, however because the water visibility in the Sound was only marginally better than in the local lakes.

3.2.3 Success Criteria

Success was defined in the Demonstration Test Plan as recovering >75% of the investigated targets without diver intervention.

3.2.4 Results

Because of the reasons described above we conclude that we would be unsuccessful in achieving 75% autonomous recovery in murky waters typical of the Currituck Sound at Duck. Because of water visibility problems diver intervention would be required for all target identifications in a full scale demonstration either on Lake Jordan or in the Currituck Sound. It may be possible that a much higher success rate could be attained in water with 2 ft visibility.

3.3 OBJECTIVE: Successful Remote Excavation

The water jet and the suction dredge are mounted on a 3-axis swivel mount on the top edge of the shroud. Their function is to excavate the sediment layer inside the shroud to reveal the target for examination.

3.3.1 Metric

A successful remote excavation is one which can be accomplished by manipulating the water jet and the dredge from the deck, without a diver having intervene.

3.3.2 Data Requirements

Several excavations must be accomplished using the shroud and water jet/dredge in a variety of water depths and with different sediment types.

3.3.3 Success Criteria

Using the criteria established in the Demonstration Test Plan, autonomous excavations will be considered successful if 75% of the targets buried less then 2 feet deep can be uncovered without diver intervention.

3.3.4 Results

The dredge system was successfully operated for numerous excavations over a period of two days on Lake Jordan. The three axis mount allowed the suction head to be easily manipulated inside the shroud. The three way ball valve allowed both individual and simultaneous operation of the water jet and the suction dredge. The water jet was effective at breaking up the packed sand allowing the suction dredge to eject the material away from the recovery area. In other excavations, it performed well in breaking up and removing sediment crusts composed of combined sand and gravel. In several instances excavations were made more than 2 ft deep resulting in removal of sediment down to a bedrock level. Tests were conducted in water depths of 4-10 ft.

3.4 OBJECTIVE: Remote Certification of Targets for Recovery

Following excavation of the target using the water jet and the suction dredge, the suction dredge will be used to clear suspended sediment from inside the shroud. Provisions are also available on deck for introducing filtered water into the shroud using a pump and filtration system incorporating two (100 μm and 10 μm) filters in parallel. Following this the TV camera is lowered to near contact with the target. Filtered water is be introduced between the TV camera and the target to improve visualization. The TV camera has a minimum focal distance of about one inch. The TV image is presented to the UXO technician is recorded on the digital video recorder for review and for the record. The intent is for the UXO technician to identify the target, determine its fuzing, and certify it as appropriate for recovery using the electromagnet array. The DIDSON imaging sonar was available for use to aid in the decision making by the UXO technician. If the technician cannot make a decision from the visual images, he must be deployed to dive on the target to make the determination by feel or feel and eyeball analysis.

3.4.1 Metric

A successful UXO technician examination is one in which he can provide a decision about the suitability of the target for further processing from the deck of the boat.

3.4.2 Data Required

The digital video recorded with either the video camera or the DIDSON imaging system are used to identify the target and record the images presented to the UXO technician.

3.4.3 Success Criteria

As defined in the Demonstration Test Plan target certification for recovery is considered successful if 75% of the time it can be achieved without diver intervention in the water. At Lake Erie[16] and Blossom Point[17] in diver-only recovery operations, 10-20% of the targets (buried less than 2 ft deep) could not be prosecuted because the diver either could not unearth the target or could not verify the target fuzing even using hands-on intervention.

3.4.4 Results

The camera and water filter system was unsuccessful at allowing us to remotely identify targets from the vessel in the cloudy water at Lake Jordan and Lake Crabtree. The filtration system improved the water quality enough to allow the target to be clearly visualized from about 3 inches away. This did not provide enough view of the extended target to identify the target and to establish the fuzing. Additional filtration and lighting should be added to the system to improve target identification. We predict that the camera system would be more effective in a location with less turbid water.

3.5 OBJECTIVE: Operate in Varying Weather and Sea Conditions

Stringent demands were not made on weather and sea surface operating conditions for this demonstration. For the demonstration, we assume surface wave conditions of Sea State 1 or better and weather conditions of at worst light rain. The basic limiting conditions are the engineering designs of the Spuds, their deployment system, and the size of the support vessel. This demonstration was limited by funds to support the engineering, component designs; we made use of an available vessel, the MTA tow vessel. The demonstration was intended to evaluate the concept of autonomous target recovery, not to determine its limits of applicability.

3.5.1 Metric

The evaluation metric was based our demonstrated ability to position and stabilize the vessel adjacent to the reacquired target in Sea State 1 conditions and to carry out the excavation, examination, certification, and recovery in conditions typical of light rain.

3.5.2 Data Required

To evaluate these operating boundary conditions required that they be encountered during the course of our demonstration. By definition rain fall rates of < 1 mm/hour are considered to be light rain. Sea State 1 determinations are based upon the energy of the wave action in a marine environment. This includes the wave height, the wave period, and the length of the waves. In general, Sea State 1 conditions occur in open waters with wind speeds of up to 7 kt and with wave heights of less than one ft.

3.5.3 Success Criteria

Successful performance requires demonstration routine target recoveries in conditions approximating Sea State 1 and light rain. While we could conduct MTA survey operations on Lake Erie with greater than Sea State 1 conditions, it was not possible for divers working on the lake to conduct recovery operations in greater than Sea State 1.[16] Accurate reacquisition of targets from a small vessel is effectively impossible with high wave or wind conditions.

3.5.4 Results

During the shakedown testing at Lake Jordan, the water was calm and flat, there was little to no wind, and no rain. We were unable to evaluate the system in other weather conditions.

Overall, our limited tests and demonstrations on Lake Jordan and Lake Crabtree allowed us to evaluate several, but not all of the Performance Objectives for this project. We feel that the concept of using the shroud and the water jet/dredge to excavate targets buried up to 2 ft deep was successful.

Outfitting the MTA pontoon boat with spuds was very successful. It allowed us to position the boat precisely and to stabilize it to rolling and pitching motions that allowed all other operations to be conducted effectively and routinely from the deck.

We feel that using this concept (with improved visualization techniques) could produce target prosecution rates (and recovery rates) that would meet the established production goals for the project. More important, we demonstrated that this approach can be effectively used to recover targets that are buried too deeply for divers working with hand tools to prosecute. Even if a diver is required to hands-on examine the uncovered targets, it would have allowed recovery of many more targets at Duck, Blossom Point, and Lake Erie in our previous demonstrations.

We failed in our attempts to remotely visualize targets from the boat deck using either a camera or the DIDSON imaging sonar. The DIDSON sonar could image through murky water, but as we were trying to use it, it became plain that the system focus had degraded to the level that it could not produce a useful image with a level of detail sufficient for the UXO technician to make an informed decision. Unfortunately, there were not sufficient funds available to have the system rebuilt. For the TV camera to allow successful remote examination of uncovered targets will require a better imaging approach than the one that we deployed in this project. Our success was doomed by the terrible water visibility in which we were working. We could not image targets clearly from more than about 3 inches. With a 2 in standoff we could image only about a 1 inch extent of the target at a time. This does not provide enough of an image to examine the target. Working in clearer water might provide a better result. Our approach to working in murky water was inadequate. To work under these conditions would require a higher volume water filtration system, better local isolation of the target to introduce a clear water layer, and improved lighting.

4.0 Site Description

As described in Section 3.0 the system tests and demonstrations took place on two local lakes (Jordan Lake and Lake Crabtree) rather than on the Currituck Sound adjacent to the former Duck Bombing Range as was planned in the Demonstration Test Plan. This approach was taken, with the permission of the Program Office because there were insufficient funds remaining in the project to complete a full scale system demonstration on the Currituck Sound and to complete the required final reports.

Jordan Lake and Lake Crabtree are manmade lakes that were completed several decades ago for flood control, to support recreation (fishing, boating, and water sports), and as water supplies for the Triangle Area metropolitan centers.

Lake Crabtree is a very small body of water created by damming Crabtree Creek to create a local park and recreation area. It is located within one-half mile of our offices. It has a limited boat launch facility (for unpowered boats) and extensive boardwalks and decks over the water. We used the lake for testing several system components in shallow water from the decks and boardwalks. Figure 4-1 shows a photo of Lake Crabtree with the deck and boardwalk area that we used for component testing. Figure 4-2 shows an aerial photo of Lake Crabtree.

Figure 4-1. Dock at Lake Crabtree

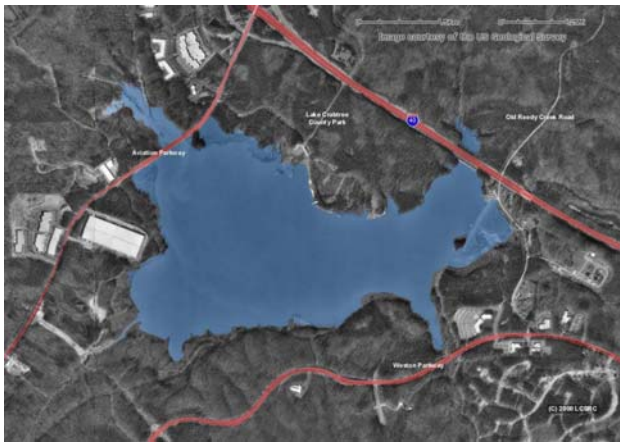

Figure 4-2. Aerial photograph of Lake Crabtree

Jordan Lake is much more extensive, (Figure 4-3). It extends for ~10 miles in its longest dimension. Maximum water depths are ~40 ft in areas near the dam. The lake has several man-made sand beaches and about a dozen improved boat launch facilities for large power boats. The topography around each lake is fairly rugged with bedrock outcroppings and both evergreen and hardwood forests. Both lakes are primarily filled by storm water runoff following rain events. Lake Crabtree is nearly constant level; Lake Jordan water levels vary by up to several feet during the year, at least in part because it serves as a primary water supply for metropolitan areas within Wake County. Because they are primarily filled by storm water runoff each lake has a high suspended silt level and consequently very low water visibility.

4.1 Site Selection

The full system shakedown testing was performed at Jordan Lake, in Chatham County, NC. We selected multiple locations in the lake for testing varying in depth from 4-10 ft. The majority of the testing was done in two areas of the lake. The first was in approximately 5 ft of water and the second in approximately 10 ft of water. Both locations were relatively flat, near the shore and had a sandy bottom or a bottom with mixed sand and gravel. There was a relatively small amount of fine silt and leaf and mulch debris covering the sediment surface.

4.2 Site History

Jordan Lake and Lake Crabtree Lake do not have any ordnance, munitions, or military-related history. The history of these sites is generally described in Section 4.0

4.3 Site Geology

The general site topography, vegetation and the size and shape of the marine areas have been described above. The range of water depths, sediment types, and shoreline amenities have been described above. The geology of the site is not relevant to the studies that we have carried out or to this report.

Figure 4-3. Aerial photograph of the dam and Jordan Lake.

4.4 Munitions Contamination

There is no know munitions contamination associated with either Jordan Lake or Lake Crabtree.

5.0 Test Design

Because of a funding shortage primarily related to the extent and complexity of the FEA modeling study that was undertaken at the beginning of the project, the planned demonstration on the Currituck Sound near Duck, NC was suspended. As an alternative, shakedown tests were carried out using inert ordnance items at Jordan Lake located in Chatham County, NC. The goal of the redesigned test was to evaluate the individual components of the system and to determine the feasibility and likely outcomes that would have likely resulted from performing the scheduled full scale field demonstration.

5.1 Conceptual Experimental Design

The underwater video camera and filter system was tested at Crabtree Lake, on October 8, 2009.

The shakedown testing of the complete system took place on October 12-14, 2008. The first day was spent preparing the boat and equipment for transport. The second day was spent assembling the recovery system on the pontoon boat, launching the boat, and evaluating the performance of each of the components. The final day was spent practicing positioning of the boat and operating the recovery system in deeper water.

Figure 5-1: Divers are shown preparing to investigate a target following the 2005 MTA demonstration. Note the white flag and pole marking the target position immediately behind the skiff.

5.2 Site Preparation

No significant site preparation was required for this shakedown. Fiberglass poles were inserted into the sand to simulate target locations. This is the same method that was used during the 2006 recovery operation of the MTA on the Currituck Sound, Figure 5-1.

5.3 System Specification

The technology and the components used in the demonstration were described in part in Chapter 2 of this report. The deck of the MTA vessel was cleared of most of the equipment previously used to support the MTA survey demonstrations. The earlier hoist was replaced by a new 4-function marine hydraulic crane purchased from Steelhead Marine, Inc., Figure 5-2. This crane was used to support

Figure 5-2: The four-function hydraulic crane from Steelhead Marine is shown.

all the recovery operations.

The new spuds and their deployment equipment were specially constructed using local vendors and machine shops. They are installed on the deck fore and aft of the crane position, Figure 5-3. Both the crane and the spuds were located so that their support structures could be bolted through the deck directly into the structural members of the vessel. Mechanical winches are used to raise and lower the spuds to stabilize the boat against drifting and rocking. The mounting brackets hinge to allow them to be tilted to horizontal for installation and removal and for transport between target locations.

Figure 5-3: The spuds are shown deployed on the pontoon boat.

There are several mounting brackets installed on the upper edge of the shroud. The most important of these is used to support the mount for the suction dredge and the water jet. The suction dredge is shown mounted on the shroud in Figure 2-7. This 3-axis mount allows the dredge to be rotated, tilted, and raised or lowered, to scour out sediment to uncover the target of interest. The water jet is mounted beside the dredge intake to stir up and dislodge sediment that is resistant to removal using the dredge alone.

The primary visualization tool for evaluating the target once it is uncovered is a TV camera, Figure 2-12. The camera is designed to mount to a pole or other external mount. It operates either in color or black and white. The image is illuminated by a ring of high brightness light emitting diodes (LEDs) mounted around the camera lens. These are designed to illuminate the target.

The camera design is fixed focus and the depth of field extends from 1 inch to infinity. The camera output is visualized on a monitor screen and is recorded using a digital video recorder purchased to support the same system for the MTA. The image can be monitored in real time or reviewed during replay from the DVR. A water filtering system was designed and mounted on boat deck. It pumps clean water into the shield that isolates the area immediately in front of the camera. The shield extends forward and is intended to fit over the target being examined.

5.4 Calibration Activities

No calibration activities are required to conduct the recovery operations.

5.5 Data Collection

Because the full scale demonstration on the Currituck Sound could not be undertaken, our data collection was limited to the test and demonstration activities described above. We setup the shakedown testing at Lake Crabtree and Jordan Lake to provide the best evaluation of the system performance under the limited scope of operation. Using the results from our shakedown testing, we have described what we feel that the actual performance would be under full scale recovery operations in the field.

5.6 Validation

N/A

6.0 Analysis Plan

6.1 Preprocessing

N/A

6.2 Target Selection for Detection

The shakedown demonstrations on Lake Crabtree and Jordan Lake were setup to evaluate (to the extent possible in these limited studies) the performance of all components of the system in a way that would allow us to accurately predict actual performance in a full-scale field demonstration on a former marine ordnance range. We evaluated all the components of the system using inert ordnance items and ordnance surrogates placed on the sediment surface. We worked in water depths ranging from 4 to 10 ft. We tested the dredge/water jet on both sandy bottoms and bottoms with sediments of mixed sand and gravel.

Because of the limited scope of the tests that were carried out, we were unable to evaluate the overall system performance as a function of varying water surface conditions and in weather conditions that were less than ideal.

The limiting effects on the system performance were the extremely poor water visibility and the limitations of our TV imaging system (and the DIDSON sonar imaging system) in overcoming these limitations. A rebuild of the DIDSON system beam former components and a redesign of the TV camera (and water clarification systems) would improve the system capabilities for operating in turbid water.

6.3 Parameter Estimates

N/A

6.4 Classifier and Training

N/A

6.5 Data Products

The primary data products of this project are the narrative description the system operation as described in previous sections. Because the demonstration was limited to shakedown studies and testing at local lakes, accurate predictions of production rates, and system limits cannot be quantified with confidence. Estimates based on our results indicate that the recovery of a single UXO item can be completed in under 1 hour, and that the dredge can successfully uncover targets buried at least 2 ft deep.

7.0 Performance Assessment

7.1 OBJECTIVE: Production Rates

The metric for measuring the production rate, was the operational time to setup the equipment and recover a target. The goal was to recover targets in less than 1 hour. Because the targets were not buried during the shakedown testing but were instead placed proud on the bottom, we were unable to complete an actual recovery of buried objects. We used the dredge to excavate an area representative of that required to recover a target. The actual amount of dredging required could be more or less depending on the target depth and size; and the time required may strongly depend upon the sediment composition.

The other unknown is the visualization of the target. The camera and filtration system were unsuccessful at identifying the target in cloudy water in separate experiments at both Jordan Lake and Lake Crabtree. We attempted to filter the water and inject a clear stream directly in front of the camera. This approach allowed us to image a 2 to 3 in area in front of the target, but it was not possible to make the required target and fuzing identification. Without additional improvements to the visualization system diver intervention would be required on each target to identify and determine if the target was safe for recovery. Although there are still unknowns we expect that recovery could take place in under 1 hour, in good weather conditions.

7.2 OBJECTIVE: Autonomous Recoveries

The metric for autonomous recoveries, was to complete the recovery operation without hands-on intervention from a diver. We were unable to identify the targets in very turbid water with the video camera or sonar imaging system. Diver intervention would be required for all target identification for conditions equivalent to those in our lake studies. We anticipate the camera system would be more effective in clear water with greater visibility. We were unable to evaluate this premise in our limited demonstration. Rebuilding the DIDSON beam former system may also provide a separate potentially powerful visualization approach.

7.3 OBJECTIVE: Successful Remote Excavation

The metric for successful remote excavation was that all excavation using the suction dredge could be completed from the deck of the boat. This was a success. The three axis mechanical rotation allowed the suction head to be easily manipulated inside the recovery shroud. The manual design using dock lines could easily be operated by one person. The three way ball valve allowed for both simultaneous and individual operation of the suction dredge and waterjet. The waterjet was effective at breaking up crusty sediments, allowing the suction dredge to eject the material away from the recovery area. In several instances excavations were made greater than 2 ft deep. The system was most effective when the waterjet was operated individually for periods of time applying the full pressure from the pump to break up the sediment. The ball valve was then switched to simultaneous operation to excavate the sediment away from the area.

7.4 OBJECTIVE: Remote Certification of Targets for Recovery

The metric for remote certification of targets for recovery required identification of munitions and explosives of concern (MEC) items and their fuzing from the deck of the boat. This was unsuccessful in the turbid water at Lake Jordan and Lake Crabtree. The filtration system was able to provide enough clean water to allow the target to be visualized from a few inches away. This did provide enough view to identify an unknown target and its fuzing. Additional filtration and lighting are required for this to be successful. We expect the camera system would be much more successful in clear water.

7.5 OBJECTIVE: Operate in Varying Weather and Sea Conditions

The metric for operating in varying weather and sea conditions was to demonstrate the ability to position, stabilize and operate the system at sea state 1 with light rain. During the shakedown testing, we did not experience any waves, rain or significant wind. The water was flat the entire operation. We were unable to evaluate the system in other weather conditions. We estimate, however that the spud system would maintain the boat in a stable configuration in sea state 1 conditions. The presence of a light rain would make little or no difference to any of the operations associated with this project.

8.0 COST ASSESSMENT

8.1 COST MODEL

In Table 8-1 we present the Cost Model for a hypothetical project using the equipment developed for this demonstration project. These costs are based upon either the original equipment purchase costs for items provided as Government Furnished Equipment (GFE) from other ESTCP/SERDP projects, the costs of components (or their development costs if they were constructed in house) developed in this project, rental costs based upon recent rental experience, and support services costs is based upon recent experience. The equipment costs are listed at their full development or replacement value; no attempt is made to develop an amortization schedule or a plan to capitalize these costs. This cannot be realistically done until there is a reasonable estimate of the probable business use for the equipment. Additional assumptions associated with the Cost Model are listed below.

- Equipment costs are based on full replacement value, or are the full manufacturing costs for one-of-a-kind components. The components in Table 8-1 are those that we had available (some from prior projects and some from SAIC property inventory). They would not be the same components that would be used if a new (most appropriate) system were being created for commercial purposes. The "commercial" system would be considerably less expensive than the value quoted in Table 8-1.
- Mobilization and demobilization costs are based upon a 500 mile round trip (Cary, NC to the destination). It is assumed that a one day pack out will be required before departing Cary. The mobilization day is assumed to include travel and unpacking of equipment. It is assumed to take 1.5 days to recover all equipment, dismantle, and pack out in preparation for return to Cary. Rental vehicles are assumed to be returned the following day.
- Site preparation costs are assumed to include only the costs for reacquiring and flagging targets to be recovered. It is assumed that GPS-based first order control points were previously established in support of the recovery operation. No costs have been assumed for vessel launching and recovery, for slip fees, or for equipment loading and unloading, (which would be required if equipment were shipped to the site by common carrier).
- Projected costs for the UXO-certified diver are based upon the assumption that he will not be diving. Actual dive time will be additionally charged at twice the quoted hourly rate. UXO-certified technician costs are based upon the total daily fractional costs to the subcontract and include mobilization, travel, rental vehicle, per diem costs. His travel is assumed to be 400 miles round trip by private vehicle.
- The explosives demolition costs are based upon a small number of items (~25) and assume that all functions can be handled by the UXO technician alone. The costs of the demolition will be a strong function of the shipping distance for the explosives, local explosives storage costs, and shipping costs for residue disposal.
- The costs of the recovery operation are quoted on a per day basis. There are no economies of scale unless the water operations extend beyond two weeks. This hypothetical operation assumes that the work week consists of six 8-hour days. One day is charged at overtime rates. For multi-week operations costs must be adjusted for

weekend time off, weekend overtime, weekend travel costs, and/or for crew change out costs.

Table 8-1: Cost Model for a Field Recovery Operation using the Automated Underwater Retrieval System.

	Cost Element	Known Cost ($K)	Tracking Data
Equipment Costs	GFE Equipment		Assumes use of ESTCP
	Pontoon Boat	22.9	Equipment from Inventory
	GPS Equipment	20.0	
	Sonar	3.5	
	Electronics	20.0	
	Sensors	12.0	
	Build-Out Pontoon Boat		Based Upon Development
	Components	43.0	Costs
	Engineering	10.0	
	Custom Fabrications	4.5	
	SAIC-Owned Equipment		Assumes use of SAIC-
	Skiff, Engine, Trailer	10.0	Owned Equipment From
	GPS Equipment	23.0	SAIC Inventory
	Magnetometer	20.0	
	Hardware	2.0	
	Consumables	2.0	
	Repairs	3.0	
Total Support Equipment Costs		**195.9**	
Mobilization/ Demobilization	Rental Equipment	3.0	Assumes 8 day rentals
	Travel Costs	0.3	Assumes 500 mi Round Trip
	Labor/Per Diem	16.7	Daily Costs
	Marinas, Moorings	0.2	Assumes 1 Week Mooring
Site Preparation/ Setup Costs	Target Reacquisition/ Flagging		Assumes 1 Day to Reacquire
	Labor/Per Diem	4.3	All Targets
	UXO Tech Support	1.2	
	Hardware	1.0	
	Chase Boat	0.2	
	Position Refining		
Recovery Costs/ Per Day On Site	Labor/Per Diem	4.3	Number of Targets Recovered
	Chase Boat	0.2	Days on Site
	Rental Vehicles	0.4	
	Fuel	0.1	
	UXO Tech Support	1.2	
Daily Operational Costs		**6.1**	
Demostration Consumables	UXO Demo Costs	2.0	Assumes 1 Demo, 1 Day
	Explosives	3.0	
	Waste Disposal Cost	3.0	
	Equipment Repairs	4.0	
	Consumables	3.0	

8.2 COST DRIVERS

The primary cost drivers for implementing this technology on a demonstration site are water depth, water clarity, target depth, and target type. On a range with fairly clear water (good diver visibility), fairly deep water, and primarily inert ordnance it is likely that using a dive team will be the more economical approach for routine target recoveries. The previous sentence basically described the situation at the Proof Testing Range on Lake Erie at Port Clinton. Even at this range, however, there were ~20% of the targets that were not recovered because the diver could not touch them to determine fuzing, or could not break them loose from the sediment. These targets would be clear examples appropriate for the use of this approach. On Lake Erie, in the diver-only recovery operation typically 18-24 targets were recovered per day. The recovery operation was conducted by two 3-man dive crews in 2 boats with an additional UXO-supervisor. Recovery rates were much lower when prosecuting targets in the Toussaint River. This technology would be best suited on a range with shallow (< 10 ft) water, and deeply buried targets.

8.3 COST BENEFIT

The cost benefit of this system is unknown at this point. It is doubtful that this system would be more economical than a dive team on a site with good visibility and primarily inert ordnance. This system has a significant benefit in recovering targets buried too deep for divers to access. Such targets are currently left in place, and reported to the local EOD detachment for prosecution.

9.0 Implementation Issues

The major obstacle to future implementation of this system is with underwater visualization. This proved to be a more difficult task than originally anticipated. The water filtration system improved the water clarity enough to allow the target to be visualized from a few inches. This did not provide an extensive enough view of the target to allow for identification. For this system to be successfully operated in the field, the visualization must be improved. This should be accomplished with additional filtration, additional lighting, improved cameras and/or a rebuilt sonar imaging system.

Overall, the system was straightforward to operate. Positioning the vessel was easily accomplished using winch controlled anchors. The mechanical winches were effective at raising and lowering the stabilizing spuds. The 4 function hydraulic crane allowed the shroud to be positioned efficiently over the marked target. The dredge was easy to manually control using the dock lines. Completing automation of this system would improve its operation. A hydraulic controlled system would improve the positioning of the suction head and water jet, and allow for more efficient dredging. The electromagnet was able to lift the inert items used in the shakedown tests. We do not know how effective it would be at lifting partially buried items.

All components used to construct this system were either COTS or easily manufactured items. No special skills or training is needed to operate the technology. A UXO technician/diver is required at all times during operation if ordnance items are potentially going to be encountered. The technician is responsible for making decisions related to identification and recovery of all UXO items.

10.0 References

1. NDCEE Report: http://www.ctc.com/technology%20categories/MunitionsExplosivesofConcernUXOManagement.htm

2. "Efficient Shallow Underwater UXO Retrieval (MM-200606) http://www.estcp.org/Technology/MM-0606-FS.cfm

3. ESTCP Project 200324, http://www.estcp.org/projects/uxo/UX-0324o.cfm

4. "Reconnaissance Survey in the Currituck Sound Adjacent to the Former Naval Duck Target Facility," J.R. McDonald, Tech Report to the ESTCP Program Office, 2004

5. "Marine Towed Array Technology Demonstration Plan at the Former Naval Duck Target Facility, J.R. McDonald, AETC Incorporated, 26 April 2005

6. "Marine Towed Array Technology Demonstration at the Former Naval Duck Target Facility, ESTCP Project MM200324, June 2005 http://www.estcp.org/viewfile.cfm?Doc=MM%2DO324%5FD1%2Epdf

7. DIDSON (Dual-frequency Identification Sonar), http://www.soundmetrics.com/

8. Walker Magnetics Group, Inc., http://walkermagnet.com/contact/columbus.html

9. "Efficient Shallow Underwater UXO Retrieval, ESTCP Project MM2006-06, *A White Paper Submitted in Response to Action Item Request Following the 1 March 2007 IPR,"* M. Christopher Gibson and Jim R. McDonald, SAIC, May 2007

10. "White Paper Submitted in Response to ESTCP Program Office Request of 3 December 2007, *A Status Report for Project MM2006-06,"* M. Christopher Gibson and Jim R. McDonald, SAIC, January 2008

11. "Safety and Environmental Risk Assessment Report Conducted in Support of ESTCP Project MM-2006-06," M. Christopher Gibson and Jim R. McDonald, SAIC, April 2007

12. Mallett Technology, Inc., http://www.mallett.com/

13. http://maic.jmu.edu/ordata/Mission.asp

14. ANSYS AUTODYN, http://www.ansys.com/products/explicit-dynamics/autodyn/default.asp

15. "Munitions Management Project MM2006-06, SAIC Project No. 01-0031-08-6139-111, Demonstration Test Plan," October 2008

16. "Demonstration of the Marine Towed Array on Ostrich Bay at the Former Naval Ammunition Depot – Puget Sound," Jim R. McDonald, SAIC, Final Report September 2008, http://www.estcp.org/viewfile.cfm?Doc=MM-0324-LakeErie.pdf

17. "Marine Towed Array Technology Demonstration at the Blossom Point Research Facility," Jim R. McDonald SAIC, Final Report, 15 July 2009

APPENDIX A – Points of Contact

Organization	Point of Contact	Role in Project	Phone/Fax/Email
ESTCP 901 North Stuart St. Suite 303 Arlington, VA 22203	Jeffrey Marqusee	Director, ESTCP	Tel: 703-696-2120 Fax: 703-696-2124 Email: jeffrey.marqusee@osd.mil
	Herb Nelson	PM for UXO	Tel: 703-696-8726 Fax: 703-696-2124 Email:Herbert.Nelson@osd.mil
NOSSA Code N52 3817 Strauss Ave Indian Head MD 20640	John Dow	COR	Tel: 301-744-5640 Fax: 301-744-6749 Cell: 240-682-1699 Email: John.Dow@navy.mil
SAIC 120 Quade Dr. Cary, NC 27513	Jim R. McDonald	PI	Tel: 919-677-1519 Cell: 919-673-6805 Fax: 919-678-1508 Email: mcdonaldjr@saic.com
	Chris Gibson	System Engineer	Tel: 919 677-1592 Cell: 919-332-3712 Fax: 919-678-1508 Email: Michael.C.Gibson@saic.com1592
Triangle Rent A Car 5401 Hillsboro St. Raleigh, NC	Conf #		Tel: 919-851-2555