ESTCP
Cost and Performance Report

(EW-201137)

LDDX: A High-Efficiency Air Conditioner for DOD Buildings

February 2017

This document has been cleared for public release; Distribution Statement A

ENVIRONMENTAL SECURITY
TECHNOLOGY CERTIFICATION PROGRAM

U.S. Department of Defense

Page Intentionally Left Blank

This report was prepared under contract to the Department of Defense Environmental Security Technology Certification Program (ESTCP). The publication of this report does not indicate endorsement by the Department of Defense, nor should the contents be construed as reflecting the official policy or position of the Department of Defense. Reference herein to any specific commercial product, process, or service by trade name, trademark, manufacturer, or otherwise, does not necessarily constitute or imply its endorsement, recommendation, or favoring by the Department of Defense.

Page Intentionally Left Blank

REPORT DOCUMENTATION PAGE

Form Approved
OMB No. 0704-0188

Public reporting burden for this collection of information is estimated to average 1 hour per response, including the time for reviewing instructions, searching existing data sources, gathering and maintaining the data needed, and completing and reviewing this collection of information. Send comments regarding this burden estimate or any other aspect of this collection of information, including suggestions for reducing this burden to Department of Defense, Washington Headquarters Services, Directorate for Information Operations and Reports (0704-0188), 1215 Jefferson Davis Highway, Suite 1204, Arlington, VA 22202-4302. Respondents should be aware that notwithstanding any other provision of law, no person shall be subject to any penalty for failing to comply with a collection of information if it does not display a currently valid OMB control number. **PLEASE DO NOT RETURN YOUR FORM TO THE ABOVE ADDRESS.**

1. REPORT DATE *(DD-MM-YYY)*
01-03-2017

2. REPORT TYPE
C&P Report

3. DATES COVERED *(From - To)*
March 2013 to June 2017

4. TITLE AND SUBTITLE
LDDX: A High-Efficiency Air Conditioner for DoD Buildings

5a. CONTRACT NUMBER
W912HQ-13-C-0003

5b. GRANT NUMBER
EW-201137

5c. PROGRAM ELEMENT NUMBER

6. AUTHOR(S)
Andrew Lowenstein, Jeffrey A. Miller, Thomas Hermans

5d. PROJECT NUMBER

5e. TASK NUMBER

5f. WORK UNIT NUMBER

7. PERFORMING ORGANIZATION NAME(S) AND ADDRESS(ES)
AIL Research, Inc.
57 Hamilton Avenue
Hopewell, NJ 08525

8. PERFORMING ORGANIZATION REPORT NUMBER

9. SPONSORING / MONITORING AGENCY NAME(S) AND ADDRESS(ES)
Environmental Security Technology Certification Program
4800 Mark Center Drive, Suite 17D03
Alexandria, VA 22350

10. SPONSOR/MONITOR'S ACRONYM(S)
ESTCP

11. SPONSOR/MONITOR'S REPORT NUMBER(S)
EW-201137

12. DISTRIBUTION / AVAILABILITY STATEMENT
Approved for public release; distribution unlimited

13. SUPPLEMENTARY NOTES

14. ABSTRACT
Conventional cooling systems are inefficient dehumidifiers, often supplying too much temperature reduction (i.e., sensible cooling) when supplying adequate dehumidification (i.e., latent cooling). Two approaches to more efficient indoor humidity control were field tested in this project. Both approaches integrated a liquid desiccant (LD) into a compressor-based DX air conditioner to more than double the dehumidification provided by the air conditioner. At AHRI A rating conditions, the LDDX prototypes that were tested at Picatinny Arsenal (3-ton) and Fort Belvoir (5-ton) supplied air at dewpoints of 46.5 F and 50 F, respectively. Both prototypes demonstrated the capability to adjust the Sensible Heat Ratio (SHR) of the supplied cooling by controlling their desiccant flows. The Fort Belvoir prototype was the more efficient of the two operating at an Energy Efficiency Ratio (EER) of 11.46 and SHR of 0.403. Both prototypes operated without the entrainment of liquid desiccant droplets in the process air.

15. SUBJECT TERMS

16. SECURITY CLASSIFICATION OF:			**17. LIMITATION OF ABSTRACT**	**18. NUMBER OF PAGES**	**19a. NAME OF RESPONSIBLE PERSON**
a. REPORT U	**b. ABSTRACT** U	**c. THIS PAGE** U	UU	56	**19b. TELEPHONE NUMBER** *(include area code)*

Standard Form 298 (Rev. 8-98)
Prescribed by ANSI Std. Z39.18

Page Intentionally Left Blank

COST & PERFORMANCE REPORT

Project: EW-201137

TABLE OF CONTENTS

Page

EXECUTIVE SUMMARY ES-1

1.0 INTRODUCTION 1
- 1.1 BACKGROUND 1
- 1.2 OBJECTIVE OF THE DEMONSTRATION 1
- 1.3 REGULATORY DRIVERS 2

2.0 TECHNOLOGY DESCRIPTION 3
- 2.1 TECHNOLOGY OVERVIEW 3
  - 2.1.1 Description – LDDX-WF 3
  - 2.1.2 Visual Depiction – LDDX-WF 5
  - 2.1.3 Description – LDDX-Ad 5
  - 2.1.4 Visual Depiction—LDDX-Ad 6
- 2.2 ADVANTAGES AND LIMITATIONS OF THE TECHNOLOGY 7

3.0 PERFORMANCE OBJECTIVES 9
- 3.1 SUMMARY OF PERFORMANCE OBJECTIVES 9
- 3.2 PERFORMANCE OBJECTIVES DESCRIPTIONS 9

4.0 FACILITY/SITE DESCRIPTION 15
- 4.1 PICATINNY ARSENAL: FACILITY/SITE LOCATION AND OPERATIONS 15
- 4.2 FORT BELVOIR: FACILITY/SITE LOCATION AND OPERATIONS 15

5.0 TEST DESIGN 17
- 5.1 CONCEPTUAL TEST DESIGN 17
- 5.2 BASELINE CHARACTERIZATION 17
- 5.3 DESIGN AND LAYOUT OF SYSTEM COMPONENTS 18
- 5.4 OPERATIONAL TESTING 19
- 5.5 SAMPLING PROTOCOL 19
- 5.6 SAMPLING RESULTS 20

6.0 PERFORMANCE ASSESSMENT 21
- 6.1 LDDX-WF LABORATORY PERFORMANCE 21
- 6.2 LDDX-AD LABORATORY PERFORMANCE 22
- 6.3 LDDX-WF FIELD PERFORMANCE 23
- 6.4 LDDX-AD FIELD PERFORMANCE 25
- 6.5 MAINTENANCE ISSUES & PROTOTYPICAL DESIGN WEAKNESSES 28
  - 6.5.1 Picatinny Arsenal 28
  - 6.5.2 Fort Belvoir 28

TABLE OF CONTENTS (Continued)

Page

7.0 COST ASSESSMENT 29
7.1 COST MODEL 29
7.1.1 Space Conditioning for Comfort 29
7.1.2 Solving Building Humidity Problems 30
7.1.3 Mitigating Corrosion Damage of Stored Material 31
7.2 COST DRIVERS 32
7.3 COST ANALYSIS AND COMPARISON 33
8.0 IMPLEMENTATION ISSUES 35
APPENDIX A POINTS OF CONTACT A-1

LIST OF FIGURES

Page

Figure 1. Wicking-Fin Heat and Mass Exchanger 3

Figure 2. Refrigerant and Desiccant Circuits for the LDDX 4

Figure 3. Engineering Drawing of the LDDX-WF Prototype (96” L x 48” W x 47” H) 5

Figure 4. Flow Diagram of the LDDX-Ad 6

Figure 5. Engineering Drawing of the LDDX-Ad Prototype (84” L x 54” W x 64” H) 7

Figure 6. Installation of LDDX-WF in Parallel with Existing AC Including Common T and rh Instrumentation 18

Figure 7. Installation of LDDX-Ad in Parallel with Existing AC Including Common T and rh Instrumentation 18

Figure 8. Sample Performance Data for Fort Belvoir LDDX, Sept 4, 2015 20

Figure 9. The Laboratory Performance of the 5-Ton LDDX-Ad 23

Figure 10. The Installed LDDX-WF Prototype 23

Figure 11. 2015 Seasonal Performance of the LDDX-WF Prototype 24

Figure 12. The Installed LDDX-Ad Prototype 25

Figure 13. 2016 Seasonal Performance of the LDDX-Ad Prototype 27

LIST OF TABLES

Page

Table 1. Performance Objectives – LDDX-WF 10

Table 2. Performance Objectives – LDDX-Ad..... 11

ACRONYMS AND ABBREVIATIONS

AC	Air Conditioner
AHRI	Air Conditioning, Heating and Refrigeration Institute
AHMX	Adiabatic Heat and Mass eXchanger
AILR	AIL Research
Btu	British Thermal Unit
Btu/h	British Thermal Unit per Hour
cfm	cubic feet per minute
DOD	Department of Defense
DX	Direct Expansion
EER	Energy Efficiency Ratio
HVAC	Heating, Ventilation and Air Conditioning
LD	Liquid Desiccant
LDDX	Liquid Desiccant Direct Expansion AC
LDDX-WF	Liquid Desiccant Direct Expansion AC with WFHMX
LDDX-Ad	Liquid Desiccant Direct Expansion AC with AHMX
LiCl	Lithium Chloride
NVESD	Night Vision and Electronic Sensors Directorate
O&M	Operating and Maintenance
rh	relative humidity
SHR	Sensible Heat Ratio
TRL	Technical Readiness Level
WFHMX	Wicking Fin Heat and Mass eXchanger

Page Intentionally Left Blank

ACKNOWLEDGEMENTS

The authors would like to thank the Department of Defense's (DoD's) Environmental Security Technology Certification Program (ESTCP) project team members for their technical and administrative support in executing the project's demonstration plan and the ESTCP program office for its financial support. We also thank Mr. William Elliott, Master Planner, Facilities and Energy at Fort Belvoir and Mr. Nicholas Stecky, Resource Efficiency Manager, at Picatinny Arsenal for the insight they provided in selecting test sites at their respective bases and the assistance they provided in planning the installation and operation of the prototypes. Ms. Gricel Rivera is also thanked for her assistance in coordinating activities at Picatinny Arsenal following the retirement of Mr. Stecky in 2016.

Page Intentionally Left Blank

EXECUTIVE SUMMARY

Objectives of the Demonstration

Building air conditioning is the single largest electrical load at many Department of Defense (DOD) bases and installations creating both large energy bills and high peak demands that stress electrical infrastructure. Other problems may arise when conventional compressor-based cooling systems struggle to control indoor humidity. In addition to creating an uncomfortable work environment that undermines productivity, high indoor humidity promotes mold and mildew growth that increases both the morbidity of personnel and maintenance costs. These problems are most severe in humid climates where inadequate latent cooling can lead building managers to restrict ventilation to minimal levels that further compromise both the comfort and health of the building's occupants.

The objective of the demonstration is to prove the ability of a novel dehumidification technology to efficiently control indoor humidity without overcooling the process air. The demonstration provides the first test of the novel technology in a real-world environment where its Operating and Maintenance (O&M) characteristics can be assessed.

Technology Description

The Liquid Desiccant Direct Expansion AC (LDDX) integrates a liquid desiccant circuit (LD) into a conventional compressor-based direct expansion (DX) air conditioner (AC) to produce a cooling system that can supply dry air with a dewpoint that is lower than its evaporator temperature. This allows the LDDX to serve large latent loads without overcooling the process air so that moisture is condensed.

Two LDDX technologies were demonstrated. The first technology modified the refrigerant circuit of a conventional DX AC so that the plate-fin evaporator and condenser were replaced by the Wicking Fin Heat and Mass eXchangers (WFHMX) shown in Figure S1. As shown in this figure, the WFHMX operates with the films of LD that flow over both the refrigerant tubes and wicking fins in direct contact with the process air. For a WFHMX evaporator, the LD simultaneously cools and dries the process air so that the air supplied to the building is very dry, i.e., its relative humidity (rh) will typically be in the 45% –60% range as opposed to near 100% for a conventional DX AC.

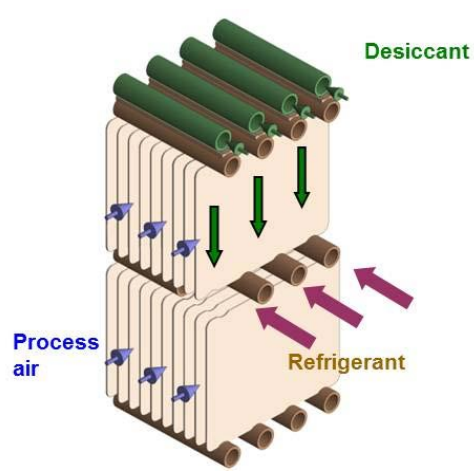

Figure S1. Wicking-Fin Heat and Mass Exchanger

The second LDDX technology relies on a fundamental property of all desiccants: the amount of water that they absorb depends only on the rh of their environment. Referring to Figure S2, the process air leaves the evaporator of a conventional DX refrigeration circuit (Point A) at close to 100% rh, while the cooling air leaves the condenser at a rh that is typically less than 50%. The two desiccant-wetted pads of contact media—one behind the evaporator and one behind the condenser—which exchange desiccant will "pump" water from the high rh side to the low rh side. The process air leaving the absorber pad is supplied to the building at a rh typically between 50% and 70%.

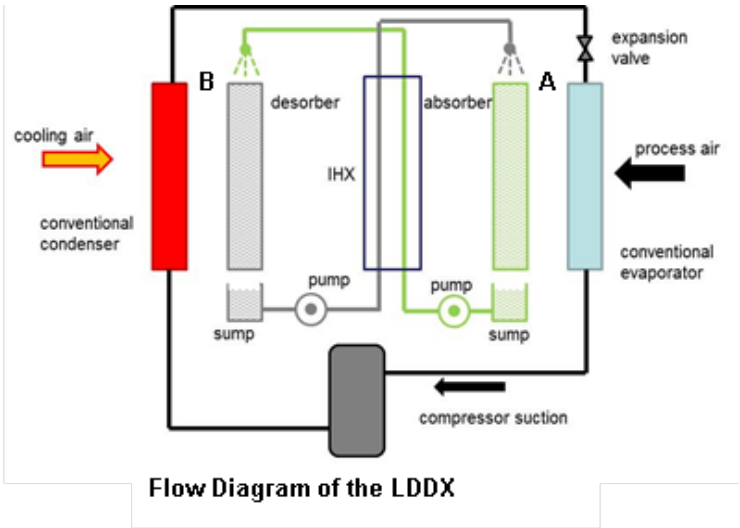

Figure S.2. Flow Diagram of the LDDX-Ad

Demonstration Results

The project reported here had a 51-month period of performance that began in April 2013. Two prototype LDDXs were built, tested in the lab and then installed on DOD buildings: a 3-ton prototype, which used wicking-fin technology, Liquid Desiccant Direct Expansion AC with WFHMX (LDDX-WF), was installed at Picatinny Arsenal and operated for almost the entire 2015 cooling season, and a 5-ton prototype, which used adiabatic desiccant-wetted pads, Liquid Desiccant Direct Expansion AC with AHMX (LDDX-Ad), was installed at Fort Belvoir and operated for part of the 2015 cooling season and the entire 2016 cooling season.

The LDDX-WF prototype met its performance objectives to supply dry air and to modulate the Sensible Heat Ratio (SHR) of the delivered cooling: at the Air Conditioning, Heating and Refrigeration Institute (AHRI) rating conditions for packaged ACs, the LDDX-WF supplied air at a 46.5^{o}F dewpoint and it modulated its SHR between 0.28 and 0.5. However, the as-built prototype's Energy Efficiency Ratio (EER) of 9.3 was below the performance objective for efficiency of 11.0. A LDDX-WF with 1.5 X larger coils was projected to have a 12.0 EER.

The LDDX-Ad prototype also met its performance objectives to supply dry air and to modulate its SHR: at AHRI rating conditions it supplied air at 50°F dewpoint and modulated its SHR between 0.40 and 0.78. It also met its performance objective for efficiency by achieving an EER of 11.46 (versus the performance goal of 11.0).

Field operation of the LDDX-Ad did uncover a compatibility problem between the LD and the contact media used in the desorber pad. After about six weeks field of operation, the contact media weakened and the desorber pad collapsed. A suitable, alternative contact media was identified through lab exposure tests, and the LDDX-Ad was refitted with a new desorber pad at the start of the 2016 cooling season.

The LDDX-WF prototype and the LDDX-Ad prototype (after the replacement of the desorber) both operated with no problems throughout their field test periods. Performance of both prototypes was stable, with the LDDX-Ad delivering air between 42% and 70% rh and the LDDX-WF delivering air between 35% and 52% rh. (There was a two-day period in the middle of the field test when the rh of air delivered by the LDDX-WF increased to between 60% and 70%. We speculate that this anomalous operation was caused by a temporary partial blockage in the flow of desiccant, but were not able to confirm this.)

Implementation Issues

Packaged roof-top or ground-mounted, compressor-based ACs that use either the LDDX-WF or LDDX-Ad technology can be energy efficient alternatives to conventional DX ACs for indoor humidity control. In applications where conventional ACs would provide too much sensible cooling when meeting the latent load, the LDDX can save the energy expended for "overcooling."

The LDDX can also address costly maintenance caused by indoor humidity. Despite the best efforts at Heating, Ventilation and Air Conditioning (HVAC) design, indoor humidity can sometimes reach levels that promote the growth of mold and mildew. A packaged LDDX may be a retrofittable solution to the problem.

Finally, the most important, early driver for the adoption of the LDDX by DOD may be the need to control corrosion by storing material in drier environments.

Page Intentionally Left Blank

1.0 INTRODUCTION

1.1 BACKGROUND

Building air conditioning is the single largest electrical load at many Department of Defense (DOD) bases and installations creating both large energy bills and high peak demands that stress the electrical infrastructure. Other problems may arise when conventional compressor-based cooling systems struggle to control indoor humidity. In addition to creating an uncomfortable work environment that undermines productivity, high indoor humidity promotes mold and mildew growth that increases both the morbidity of personnel and maintenance costs. These problems are most severe in humid climates where inadequate latent cooling can lead building managers to restrict ventilation to minimal levels that further compromise both the comfort and health of the building's occupants.

The most common approach to humidity control is to overcool the air supplied to a building so that excess water vapor condenses, but then reheat the air so that the building remains at a comfortable temperature. Overcooling/reheating is extremely inefficient, particularly when additional fuel or electricity is used for reheating. However, even for air conditioners (AC) in which heat is reclaimed from the condenser, overcooling can increase the compressor work by 30% or more.

Reducing energy use in DOD facilities is a critical challenge. As noted in the Congressional Research Service "[t]he (DOD) accounts for approximately 63% of the energy consumed by federal facilities and buildings. This makes DOD the single largest energy consumer in the United States… Its annual spending on facility energy has averaged over $3.4 billion recently."[1] A more efficient approach to controlling humidity in DOD facilities could appreciably reduce this energy use.

1.2 OBJECTIVE OF THE DEMONSTRATION

The Liquid Desiccant Direct Expansion AC (LDDX) is a novel cooling system that can dry air without overcooling the air to a temperature that is below its dewpoint. This efficient drying is accomplished by integrating a liquid desiccant (LD) into a conventional direct-expansion (DX) AC. This integration produces a packaged AC that, in many applications, is a drop-in replacement for a conventional AC that can efficiently address humidity problems within the DOD's fixed facilities.

Earlier work supported by the Department of Energy has brought the LDDX to Technical Readiness Level (TRL) 5 (i.e., breadboard validation in relevant environment). The primary objective of the reported work was to advance the LDDX to TRL 7 (i.e., system prototype demonstration in operational environment). Advancing the technology to TRL 7 would allow a manufacturer to assess the technology's commercial viability.

[1] Andrews, A., "Department of Defense Facilities Energy Conservation Policies and Spending," CRS 7-5700, February 2009.

Two versions of the LDDX were designed, built and tested. Each prototype was challenged with a set of performance objectives that set target values for (1) dewpoint of the supply air, (2) minimum Sensible Heat Ratio (SHR) of the supplied cooling, (3) range of SHR control, and (4) energy efficiency expressed as Energy Efficiency Ratio (EER). In addition to these quantitative performance objectives, qualitative objectives were set to assess the LDDX's potential acceptance by maintenance staffs and potential acceptance by personnel who work within spaces conditioned by the LDDX.

Both prototypes met their quantitative performance objectives for supply air dewpoint, minimum SHR and SHR operating range. And, while one prototype met the performance objective for EER, the other did not. (The poor EER of one prototype was occurred because its evaporator and condenser were undersized relative to the capacity of its compressor. As described in more detail in a later section, a 1.5X increase in the size of the coils for this prototype would increase its EER to an acceptable value.)

1.3 REGULATORY DRIVERS

A more efficient means for controlling indoor humidity will help the DOD comply with several policy initiatives, executive orders and regulations. Executive Order 13693 requires "building energy conservation, efficiency, and management by: (i) reducing agency building energy intensity measured in British thermal units (BTUs) per gross square foot by 2.5 percent annually through the end of fiscal year 2025, relative to the baseline of the agency's building energy use in fiscal year 2015."

A reduction in energy use for Heating, Ventilation and Air Conditioning (HVAC) in fixed facilities furthers DOD's goal of sustainability as expressed in its Strategic Sustainability Performance Plan: "DOD embraces sustainability as a critical enabler in the performance of the mission, recognizing that it must plan for and act in a sustainable manner now in order to build an enduring future." With nearly 300,000 buildings comprising 2.3 billion square feet of conditioned space, the majority of which are in humid climates, the LDDX has the potential to simultaneously reduce the energy use and greenhouse gas emissions for the Department.

2.0 TECHNOLOGY DESCRIPTION

Two different design approaches for an LDDX were explored in this project. Both approaches supply deeply dried air without over cooling. The field operation phase of the project compared the performance of each design approach to its conventional alternative.

The first approach uses a technology referred to as a Wicking Fin Heat and Mass eXchanger (WFHMX) and the second uses a technology referred to as an Adiabatic Heat and Mass eXchanger (AHMX). Although the WFHMX can more deeply dry air, its fabrication would require a significantly larger investment in tooling by the HVAC manufacturer. Prototypes of both LDDXs were fabricated and field operated in this project to more clearly identify differences in both their performance and manufacturing procedures. In the following Technology Overview, Liquid Desiccant Direct Expansion AC with WFHMX (LDDX-WF) will refer to the prototype with the WFHMX and Liquid Desiccant Direct Expansion AC with AHMX (LDDX-Ad), the one with the AHMX.

2.1 TECHNOLOGY OVERVIEW

2.1.1 Description – LDDX-WF

The LDDX-WF integrates a LD into a DX AC through the application of AIL Research (AILR's) unique WFHMX, which is shown in Figure 1. As shown in this figure, low flows of LD are delivered to the top of the WFHMX. If the WFHMX is an evaporator, the LD (green) would be cooled as it flows over the uppermost refrigerant tubes (brown). The cool desiccant then flows from the tubes onto the first row of fins. The wicking surfaces of the fins uniformly spread the desiccant. The process air that flows horizontally between the fins is simultaneously cooled and dried as it comes in contact with the desiccant-wetted surfaces. Heat is released as the desiccant absorbs water and its temperature rises. However, the fin length is designed so that the desiccant's temperature rises only a few degrees before it flows onto the next lower row of cooling tubes. When properly designed, the convective heat transfer of the desiccant on the fin is an effective substitute for the conductive heat transfer of the aluminum fins used in a conventional finned-tube heat exchanger.

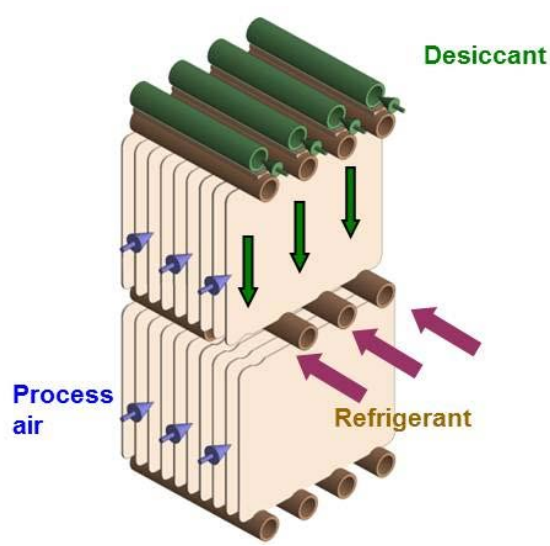

Figure 1. Wicking-Fin Heat and Mass Exchanger

Solutions of lithium chloride (LiCl) have been successfully used as a LD since the 1930s. LiCl is stable and non-toxic. It is highly soluble in water which provides a large operating envelope for the LDDX-WF where crystallization of salt will not occur. However, solutions of LiCl are corrosive to many metals (as are solutions such as seawater with high concentrations of sodium chloride). The refrigerant tubes of the WFHMX come in contact with the LD and so must be corrosion resistant. Copper/nickel tubes, although significantly more expensive than the copper tubes used in conventional evaporators and condensers, are an economically acceptable alternative for refrigerant tubes that will resist corrosion by the LD.

The refrigerant circuit for the LDDX-WF functions the same as a conventional DX AC. However, as shown in Figure 2, the aluminum finned heat exchangers commonly used as the evaporator and condenser of a conventional AC are replaced by WFHMXs.

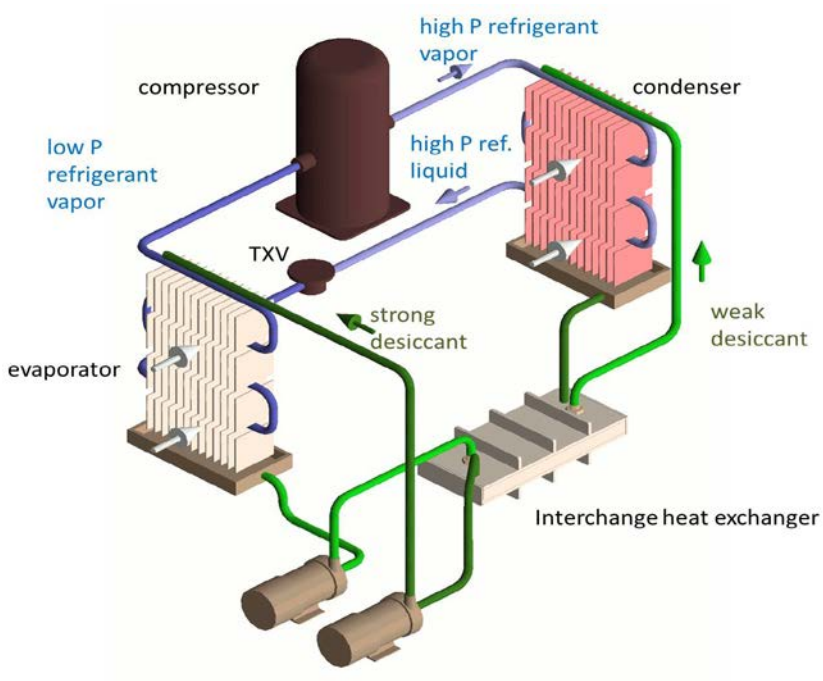

Figure 2. Refrigerant and Desiccant Circuits for the LDDX

The high affinity of a LD for water vapor allows a wicking-fin evaporator to dry air to a dewpoint that can be 10ºF to 30ºF lower than the suction temperature of the evaporator. Thus, the LDDX-WF can directly deliver dry air at a relative humidity (rh) of 60% or lower without overcooling and reheating. Compared to a conventional DX AC that always delivers nearly saturated air, the LDDX can provide twice the latent cooling.

As shown in Figure 2, the water absorbed by the LD in the evaporator is rejected to ambient in the LDDX-WF's condenser. This coil is again a WFHMX. However, in the condenser, the LD is heated as it flows over the refrigerant tubes. The desiccant releases water as its temperature rises. The cooling air that flows through the condenser carries the released water, as well as the heat rejected by the condenser, out to ambient.

2.1.2 Visual Depiction – LDDX-WF

An engineering drawing of the LDDX-WF prototype is shown in Figure 3. This prototype is designed to be a high latent alternative to an AC that processes a 1,100 cubic feet per minute (cfm) flow of air recirculated in a building (i.e., a mix of return air and outdoor air, with the outdoor air typically being less than 20% of the total).

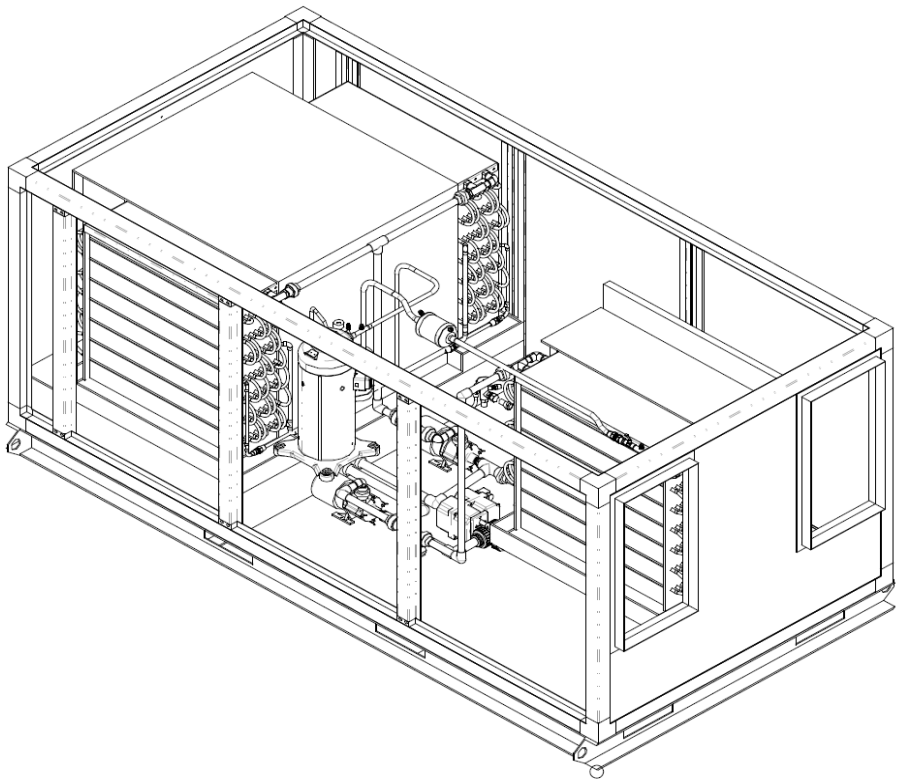

Figure 3. Engineering Drawing of the LDDX-WF Prototype (96” L x 48” W x 47” H)

2.1.3 Description – LDDX-Ad

The LDDX-Ad is a simple, straightforward modification to a compressor-based DX AC. Its enhanced dehumidification relies on a fundamental property of all desiccants: the amount of water they absorb depends on the surrounding air’s rh. For a DX AC, the process air leaving the evaporator (Point A in Figure 4) is close to 100% rh while the cooling air leaving the condenser (Point B) will typically be less than 50% rh. A desiccant, either solid or liquid, that is alternately exposed to these two air streams will “pump” water from the high to the low relative-humidity air stream. The heat that is released when the desiccant absorbs water is returned to the process air. The net result is that LDDX-Ad supplies air with a rh close to 50% and a temperature that is typically 20°F higher than its dewpoint temperature.

As shown in the flow diagram of Figure 4, two porous pads (i.e., AHMXs)—one an absorber and the other a desorber—that are wetted with a LD, move moisture from the process air to the cooling air. The pressure drop through the desiccant-wetted pads is very small—typically less than 0.1 inch w.c.—and the pumps are low wattage so the power to run the LDDX-Ad is essentially the same as that for its embedded DX system. There is a slight loss of total cooling caused by the warm desiccant that flows onto the absorber, but this loss in total cooling is small, typically on the order of 5%.

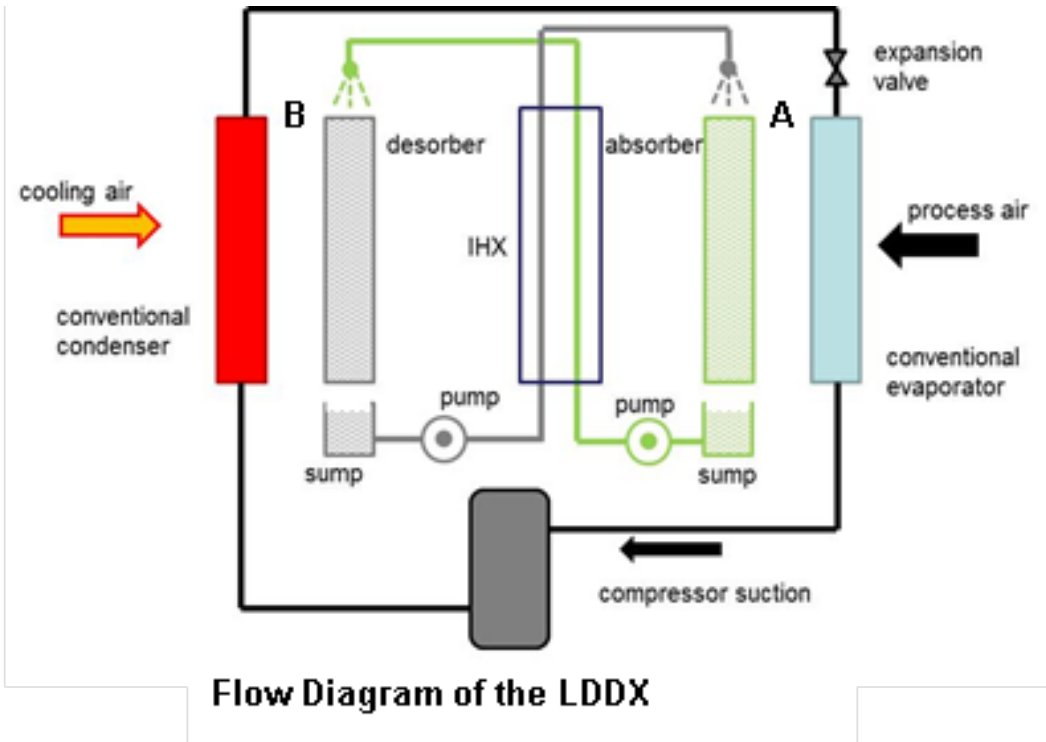

Figure 4. Flow Diagram of the LDDX-Ad

The LDDX-Ad can adjust its SHR so that it can independently control indoor temperature and humidity. When the pumps are turned off, the LDDX-Ad reverts to a conventional DX AC with a high SHR—typically 0.75 or higher. With full desiccant flow, the LDDX-Ad's SHR drops to 0.4. By modulating the desiccant flow, the LDDX's SHR can be adjusted between these two limits. This modulation provides independent control of indoor temperature and humidity.

2.1.4 Visual Depiction—LDDX-Ad

An engineering drawing of the LDDX-Ad prototype is shown in Figure 5. Similar to the LDDX-WF, the 2,000 cfm LDDX-Ad prototype is designed to be a high latent alternative to an AC that processes the air recirculated in a building.

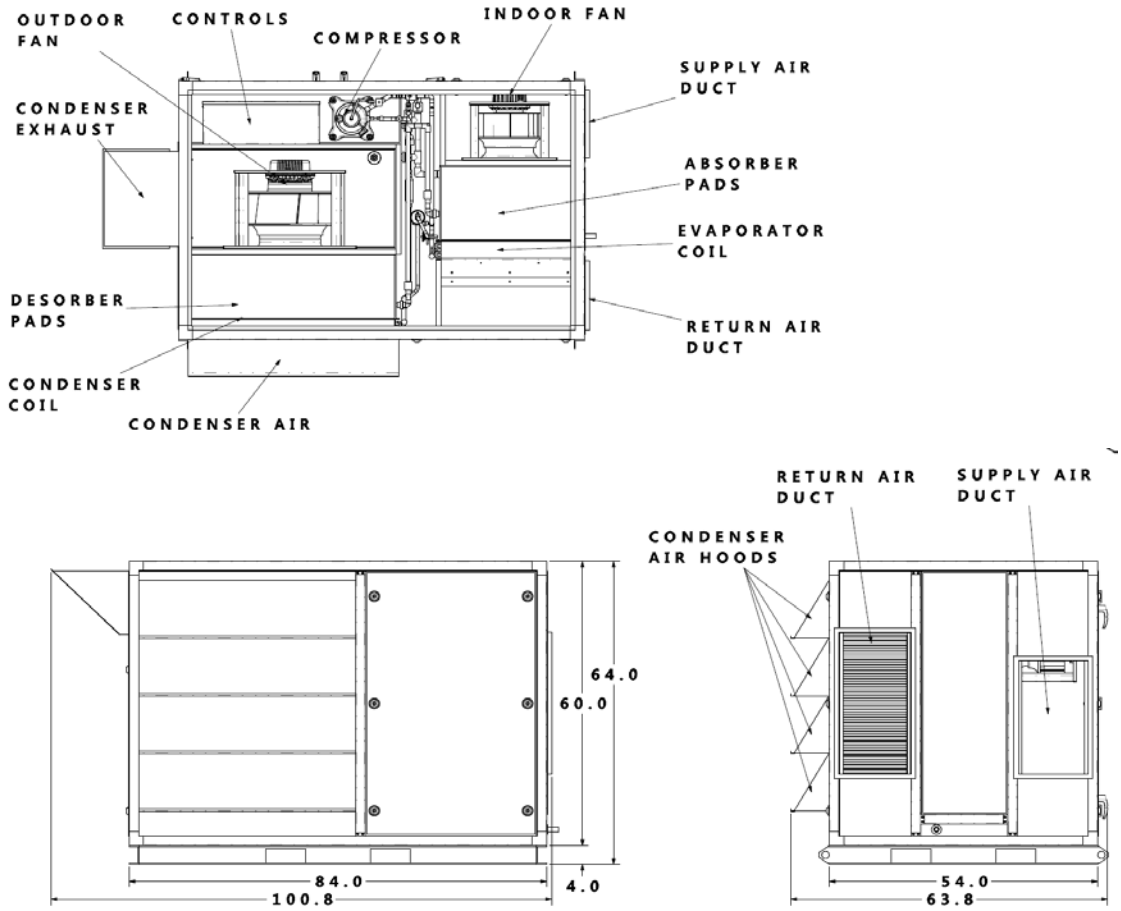

Figure 5. Engineering Drawing of the LDDX-Ad Prototype (84" L x 54" W x 64" H)

2.2 ADVANTAGES AND LIMITATIONS OF THE TECHNOLOGY

Performance Advantages: The LDDX will eliminate the need to overcool and reheat the supply air to buildings as a means for controlling indoor humidity. In applications where reheat is now used, the LDDX will reduce air conditioning energy use more than 30%, i.e., the EER for the LDDX during high latent operation can be over 11 (Btu/W-h) versus 6.0 (Btu/W-h) for a conventional DX AC that uses reheat. The LDDX will also be able to supply air at dewpoints below 45°F, which cannot practically be achieved with a conventional DX AC. This low dewpoint allows the LDDX to maintain storage facilities at humidity levels below 50%, which will suppress corrosion of stored material.

Cost Advantages and Limitations: The greatest savings for the LDDX will be incurred through lower operating costs, i.e., the 30% improvement in efficiency will produce a 30% reduction in HVAC operating costs for many DOD facilities in humid climates.

The LDDX integrates a LD circuit into a compressor-based DX circuit, and so it is a more complicated AC. This increase in complexity is relatively modest for the LDDX-Ad since its refrigerant circuit duplicates that in a conventional DX AC. When compared to ACs that use overcooling followed by reheat, the installed cost for the LDDX-Ad may be comparable (at least once the LDDX-Ad has matured and is produced in moderately high volumes) since its smaller cooling coils and compressor will offset the cost for its LD circuit.

Operating and Maintenance (O&M) costs for the LDDX are expected to be slightly higher than those for a conventional DX AC due to the need to maintain the desiccant circuit. The O&M cost increase may be on the order of 20%.

Performance Limitations: As previously noted, the LDDX is a more complicated AC than a conventional DX unit, and so will have higher O&M requirements. The periods of performance for field operation of both the LDDX-WF and the LDDX-Ad prototypes were approximately one cooling season—a period that is too short to identify the operating lifetimes for key components.

Social Acceptance: The maintenance of the LDDX's LD circuit will be unfamiliar to HVAC technicians. Procedures must be developed for standard O&M practices such as desiccant filter replacement, desiccant quality tests and clean up after servicing.

Future Potential for DOD: The DOD manages nearly 300,000 buildings comprising 2.3 billion square feet of conditioned space. A majority of these building are in climates where indoor humidity can be difficult and expensive to control. For all but the smallest cooling systems (i.e., window units and PTACs that are less than three tons), the LDDX could replace a conventional DX AC or improve the performance of a chiller by over-drying the building's ventilation air. The savings would be greatest for new installations where HVAC systems were designed for the LDDX.

In retrofit applications with high latent loads, the LDDX could replace conventional equipment that had reached the end of its service life with minimal alterations to the site. Although both the LDDX-WF and LDDX-Ad will be larger than a conventional DX AC of the same tonnage, fewer tons will be needed since the LDDX does not over cool the process air.

Although not part of the demonstration, the LDDX could be used to minimize costly damage of material from the corrosion that occurs in humid climates, (e.g., the Air Force spends $4.5B annual on aircraft maintenance related to corrosion that accelerates in humid environments). The potential for a mobile LDDX to maintain an aircraft shelter at below 40% rh or "dry out" a parked aircraft that has returned from cold, high altitude operation to a humid sea level location is now being studied in a two-year Phase II DoD SBIR award that AILR is scheduled to complete in April 2018.

3.0 PERFORMANCE OBJECTIVES

The LDDX provides an energy efficient means of controlling indoor humidity in humid climates. It will directly reduce the DOD's consumption of fossil fuels and the concomitant emission of GHGs that accompanies the generation of electricity. It will also improve the energy security of fixed military installations by reducing the stress on the installation's infrastructure for transmitting and distributing electricity that is caused by peak power demands for air conditioning. These benefits will accrue compared to an energy strategy that uses the currently best available technology for serving high building latent loads (i.e., conventional condenser-reheat ACs or air-conditioners with solid-desiccant rotors).

3.1 SUMMARY OF PERFORMANCE OBJECTIVES

Table 1 and Table 2 summarize the performance objectives for the project and the degree to which the field demonstrations met these objectives. The methods for collecting and analyzing the data that were used in the project to assess the performance objectives are described in Sections 5.0 and 6.0.

3.2 PERFORMANCE OBJECTIVES DESCRIPTIONS

Name and Definition: Supply of Dry Air

Purpose: There are critical space conditioning needs on military installations that can only be met by the supply of air that is drier than can be produced by conventional cooling coils, (i.e., the supply of air at dewpoints less than about 50°F). These needs are most commonly associated with the storage of material that can suffer high corrosion rates when kept in high humidity environments and with the special needs of laboratory facilities

Success Criteria: The "Supply of Dry Air" performance objective will be met by the supply of air at less than a 47°F dewpoint for the LDDX-WF and 50°F dewpoint for the LDDX-Ad under Air Conditioning, Heating and Refrigeration Institute (AHRI) rating conditions.

Results: Both prototypes met the objective of supplying low dewpoint air at the AHRI rating condition: the LDDX-WF supplied air at 46.5^{o}F dewpoint and the LDDX-Ad, 50.0^{o}F dewpoint.

Name and Definition: Minimum Supply SHR

Purpose: A building's cooling system will maintain indoor comfort only when it serves both the latent loads and the sensible loads on the building. While a conventional cooling coil can condense water from the process air, it typically provides much more sensible cooling than latent cooling (i.e., it will have a SHR that is greater than 0.7). Many applications require cooling systems with lower SHRs since their latent loads are large. The planned demonstration will show that the LDDX can provide most of its cooling as latent cooling without the use of reheat during field operation.

Success Criteria: The "Minimum Supply SHR" performance objective will be met by a demonstrated SHR of less than 0.35 for the LDDX-WF and 0.40 for the LDDX-Ad operating at conditions that approach the AHRI rating conditions.

Results: The LDDX-WF exceeded it performance objective by operating with a 0.275 SHR at the AHRI rating condition. The LDDX-Ad essentially met its performance objective by operating with a 0.403 SHR.

Table 1. Performance Objectives – LDDX-WF

Performance Objective	Metric	Data Requirements	Success Criteria	Results
Quantitative Performance Objectives				
Supply of Dry Air	Dewpoint (F)	Temperature and relative humidity of supply air	Supply dewpoint less than 47 F at AHRI 210/240 conditions of 80/67 F DB/WB indoor and 95/75 F DB/WB outdoor	Supply dewpoint equaled 46.5 F at AHRI 210/240 conditions
Minimum Supply Sensible Heat Ratio (SHR)	Sensible Heat Ratio	Temperature, humidity of supply air, sensible heat load and total heat load	SHR equal to 0.35 or lower	SHR equaled 0.275 at AHRI 210/240 conditions
Variable Supply Sensible Heat Ratio (SHR)	Sensible Heat Ratio	Temperature, relative humidity of supply air, sensible heat load and total heat load	Supply SHR adjustable within 0.35 to 0.65 range	Supply SHR adjustable within 0.28 to 0.50 range
Energy Use for Total Cooling	Energy Efficiency Ratio (EER)	Temperature and relative humidity of inlet and supply air; air flow; electricity consumption of LDDX	EER over 11.0 while operating with SHR below 0.4; 30% savings relative to overcool/reheat AC at same SHR	12.0 EER at 0.4 SHR (projected performance for redesigned unit)
Direct Greenhouse Gas Emissions	Projected source fossil fuel GHG emissions (metric tons CO2)	Building energy use with LDDX versus overcool/reheat AC in humid climate as predicted by building energy model	20% reduction in emissions linked to building's cooling system based on complete cooling season	20% reduction in emissions projected in some applications
Qualitative Performance Objectives				
User Satisfaction	Degree of Satisfaction	Completed survey forms with satisfaction rated at one of five levels ranging from "very dissatisfied" to "very satisfied"	Acceptance of LDDX as indicated by an average user satisfaction that is more positive than a "neutral" response	User satisfaction could not be meaningfully assessed
O&M Characteristics	Similarity to Conventional HVAC	Interviews with building maintenance staff	Acceptance of LDDX	Not studied; LDDX serviced only by AILR tech

Table 2. Performance Objectives – LDDX-Ad

Performance Objective	Metric	Data Requirements	Success Criteria	Results
Quantitative Performance Objectives				
Supply of Dry Air	Dewpoint (F)	Temperature and relative humidity of supply air	Supply dewpoint less than 50 F at AHRI 210/240 conditions of 80/67 F DB/WB indoor and 95/75 F DB/WB outdoor	Supply dewpoint equaled 50 F at AHRI 210/240 conditions
Minimum Supply Sensible Heat Ratio (SHR)	Sensible Heat Ratio	Temperature, humidity of supply air, sensible heat load and total heat load	SHR equal to 0.40 or lower	SHR equaled 0.403 at AHRI 210/240 conditions
Variable Supply Sensible Heat Ratio (SHR)	Sensible Heat Ratio	Temperature, relative humidity of supply air, sensible heat load and total heat load	Supply SHR adjustable within 0.40 to 0.70 range	Supply SHR ranged from 0.403 (desiccant on) to 0.78 (desiccant off)
Energy Use for Total Cooling	Energy Efficiency Ratio (EER)	Temperature and relative humidity of inlet and supply air; air flow; electricity consumption of LDDX	EER over 11.0 while operating with SHR below 0.4; 30% savings relative to overcool/reheat AC at same SHR	EER equaled 11.46 while operating at 0.403 SHR
Direct Greenhouse Gas Emissions	Projected source fossil fuel GHG emissions (metric tons CO2)	Building energy use with LDDX versus overcool/reheat AC in humid climate as predicted by building energy model	20% reduction in emissions linked to building's cooling system based on complete cooling season	20% reduction in emissions projected in some applications
Qualitative Performance Objectives				
User Satisfaction	Degree of Satisfaction	Completed survey forms with satisfaction rated at one of five levels ranging from "very dissatisfied" to "very satisfied"	Acceptance of LDDX as indicated by an average user satisfaction that is more positive than a "neutral" response	Very favorable comments from Ft Belvoir energy manager and zone occupants
O&M Characteristics	Similarity to Conventional HVAC	Interviews with building maintenance staff	Acceptance of LDDX	Not studied; LDDX serviced only by AILR tech

Name and Definition: Variable Supply SHR

Purpose: In most applications, the sensible and latent loads on a building will vary throughout the cooling season. Often, the variations can be large (i.e., on hot, dry days cooling loads may be mostly sensible but on mild, rainy days they may be mostly latent). A cooling system that can independently vary its SHR will provide superior indoor comfort. Furthermore, if the SHR can be varied without resorting to reheat, energy use for space conditioning can be kept to a minimum. The planned demonstration will show that the LDDX can vary its SHR and, therefore, independently control indoor temperature and humidity without the use of reheat.

Success Criteria: The "Variable Supply SHR" performance objective will be met by a demonstrated control of the LDDX-WF's SHR between 0.35 and 0.65 and the LDDX-Ad's SHR between 0.40 and 0.70.

Results: Although it did not meet the objective of modulating its SHR between 0.35 and 0.65, the LDDX-WF prototype did modulate its SHR over a wide range that should prove useful in controlling indoor humidity, i.e., it modulated its SHR between 0.28 and 0.50. The LDDX-Ad, which operates as a conventional DX AC when its desiccant flows are turned off, did meet the "Variable Supply SHR" objective: it modulated its SHR between 0.403 and 0.78.

Name and Definition: Energy Use for Total Cooling

Purpose: A primary goal of this demonstration is to show that comfortable indoor conditions can be maintained in a large segment of DOD's installations with a significant reduction in energy use compared to current methods that rely on over-cooling/reheat to control indoor humidity.

Success Criteria: The "Energy Use for Total Cooling" performance objective will be met by a demonstrated EER over 11.0 during field operation that approximates AHRI rating conditions with a SHR less than 0.4.

Results: The as-built LDDX-WF prototype did not meet the 11.0 EER performance objective: at the AHRI rating conditions, its EER was 9.3. However, computer modeling of the performance of an LDDX-WF modified to have a 1.5X larger evaporator and condenser predicted an AHRI EER of 12.0. The LDDX-Ad prototype exceeded its energy-use performance objective by operating at an 11.46 EER.

Name and Definition: Direct Greenhouse Gas Emissions

Purpose: Fossil fuels dominant the mix for power generation in the U.S. The reduction in energy use for total cooling incurred by the LDDX will produce a concomitant reduction in greenhouse gas emissions.

Success Criteria: The "Greenhouse Gas Emissions" performance objective will be met by modeling projections that show the potential for the LDDX to reduce emissions by 20%.

Results: By meeting their performance objective for efficiency, both the LDDX-WF with a larger evaporator and condenser, and the as-built LDDX-Ad prototype are expected to reduce greenhouse gas emissions by at least 20% when applied in applications with high latent loads.

Name and Definition: User Satisfaction

Purpose: Many parameters enter into a purchasing decision for a new cooling system. While some parameters such as EER and SHR can be directly measured, others such as O&M characteristics and the unit's ability to follow changing loads are more difficult to quantify. A measurement of the user's overall satisfaction with LDDX provides qualitative information on the user's acceptance of the new technology.

Analytical Methodology: Not applicable.

Success Criteria: The "User Satisfaction" performance objective will be met by a subjective evaluation of survey/interview data that leads to the conclusion that the user is likely to apply the LDDX in at other installations.

Results: Due to limitations imposed by the test site at Picatinny Arsenal, the LDDX-WF prototype did not significantly lower indoor rh in the test zone. With indoor conditions essentially unchanged, it was not possible to get a meaningful assessment of user satisfaction. At Fort Belvoir, both the on-site coordinator for the field test and the occupants that worked within the test zone reported much improved comfort levels with no unfavorable changes to the indoor environment when the LDDX-Ad operated.

Name and Definition: O&M Characteristics

Purpose: Understand the training of maintenance staff that will be required to support the installation of the LDDX on multiple buildings at DOD installations.

Success Criteria: The LDDX will be judged an acceptable HVAC system if the interviews of maintenance staff do not identify routine procedures that would be difficult to implement through reasonable training.

Results: At both test sites, the maintenance of the prototypes was the responsibility of an AILR technician throughout the tests. Consequently, the bases' maintenance staffs could not comment on the serviceability of the prototypes.

Page Intentionally Left Blank

4.0 FACILITY/SITE DESCRIPTION

4.1 PICATINNY ARSENAL: FACILITY/SITE LOCATION AND OPERATIONS

As described on the website for Picatinny Arsenal,

Picatinny Arsenal is the Joint Center of Excellence for Armaments and Munitions, providing products and services to all branches of the U.S. military… Located about 35 miles west of New York City, Picatinny has more than 1,010 permanent structures, including 64 laboratories, situated on the installation's nearly 6,500 acres. As one of the largest employers in Morris County, we employ about 3,907 civilians, approximately 93 military personnel and about 1,035 contractors. Approximately half of these employees are engineers and scientists.

Picatinny Arsenal's northern New Jersey location has warm, humid summers that create the high latent loads required to challenge the LDDX-WF. Building 407 at the Picatinny Arsenal met all preceding site-selection criteria. The building is a single-story, 21,000 square foot structure that was built in 1942. The building is approximately evenly split between administrative offices and electronics labs. Work within Building 407 in no way limited access to the building. Furthermore, there was no chemistry or biology laboratory work that required exceptionally tight control of the indoor environment with no disruptions.

Building 407 had several packaged ACs mounted outdoors on concrete slabs next to the building. These packaged ACs had adequate surrounding space for installing the LDDX-WF. Furthermore, the LDDX-WF was easily transported to its proposed locations next to the building.

4.2 FORT BELVOIR: FACILITY/SITE LOCATION AND OPERATIONS

As described on the website for Fort Belvoir,

Fort Belvoir is home to the United States INSCOM and ARCYBER and elements of ten other Army major commands; nineteen different agencies and direct reporting units of the Department of Army; eight elements of the U.S. Army Reserve and the Army National Guard; and twenty-six Department of Defense agencies. Also located here are the 249th Engineer Battalion (Prime Power), the U.S. Army Prime Power School, a Marine Corps detachment, a U.S. Air Force activity, U.S. Army Audit Agency, and an agency from the Department of the Treasury.

Fort Belvoir's northern Virginia location has hot, humid summers that create the high latent loads required to challenge the LDDX-Ad. Building 392 at Fort Belvoir met all preceding site-selection criteria. The building is a two-story, 37,000 square foot masonry structure with a brick facade that was built in 1978. The building houses staff for both administration and research. An approximately 2,000 square feet zone on the west side of the second floor of Building 392, originally served by a 4.5 ton packaged AC, was selected as the test zone within the building.

Page Intentionally Left Blank

5.0 TEST DESIGN

The LDDX prototypes were tested both in a controlled laboratory setting and on a building under conditions representative of a commercial cooling system. The laboratory tests were conducted at AILR, Hopewell, NJ. The field tests were conducted on Building 407 at the Picatinny Arsenal and Building 392 at Fort Belvoir.

5.1 CONCEPTUAL TEST DESIGN

The laboratory tests of the two LDDXs monitored the performance parameters required to both characterize operating conditions and assess performance. The monitored parameters included (1) temperature, humidity and volumetric flow rate of the process and cooling air into and out of the LDDX, (2) desiccant concentration and flow rate supplied to both the absorbing and desorbing sides of the LDDX, (3) refrigerant pressure on the high and low sides of the compressor, (4) refrigerant subcooling and superheat, and (5) pump, fan and compressor powers.

5.2 BASELINE CHARACTERIZATION

The LDDXs at both Picatinny and Fort Belvoir were installed in parallel with the packaged ACs that originally served the buildings. At Picatinny, the original AC remained fully functional following the LDDX installation. Motor-actuated dampers were installed in the supply and return ducts so that the building could be alternately cooled by the LDDX-WF and the original DX AC.

Although the LDDX-Ad was also installed in parallel with the existing AC at Fort Belvoir Building 392 the electrical service for the original AC became the power supply to the LDDX-Ad. This redirecting of power greatly simplified the LDDX-Ad's installation, but it prevented a test protocol in which the two units alternately run.

The baseline characterization of the Building 407 HVAC system at Picatinny was its performance during the weeks when the LDDX-WF was replaced by the existing conventional AC. Unfortunately, as is discussed in a later section, the baseline characterization of the conventional DX AC was compromised by a strong coupling between neighboring zones within the building. This coupling allowed the DX ACs for neighboring zones to serve some of the loads within the test zone.

The baseline characterization of the Building 392 HVAC system at Fort Belvoir included the measurement and recording of the indoor temperature and rh in two offices at ten-minute intervals over a 12-day period prior to the installation of the LDDX-Ad. The zone within Building 392 that was served by the LDDX-Ad had humidity problems that produced leaks of condensate through the zone's hung ceiling. The baseline characterization included photographs of the damage caused by this condensation.

The baseline characterization of Building 392 at Fort Belvoir also included the operation of the LDDX-Ad in a mode in which the LD circuit was turned off, converting the prototype into a conventional DX AC.

5.3 DESIGN AND LAYOUT OF SYSTEM COMPONENTS

The layout of the LDDX-WF installation at Picatinny Arsenal including instrumentation that was not internal to the unit is shown in Figure 6. As shown in this figure the LDDX-WF was installed in parallel with the existing AC. Dampers in the ducts could be adjusted to direct the recirculated air through the LDDX or the conventional AC.

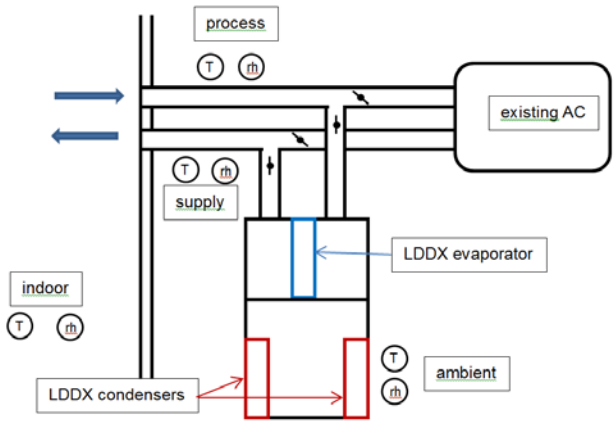

Figure 6. Installation of LDDX-WF in Parallel with Existing AC Including Common T and rh Instrumentation

The layout of the LDDX-Ad installation at Fort Belvoir including instrumentation that was not internal to the unit is shown in Figure 7. As shown in this figure the LDDX-Ad connected to the same supply/return plenum as the existing 4.5-ton AC. The return air from the building flowed upward through the roof into the right half of the plenum and the supply air flowed downward through the roof to an above-ceiling supply duct in the building. As part of the installation, the electrical service for the existing AC was reconnected to the LDDX-Ad and cover plates isolated the existing AC from the supply/return plenum.

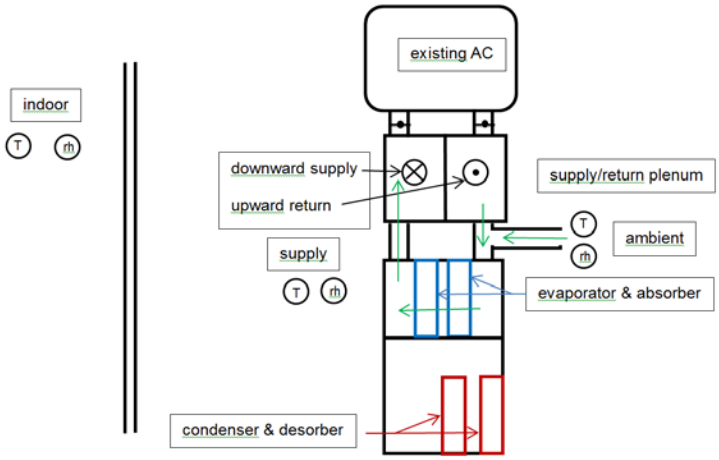

Figure 7. Installation of LDDX-Ad in Parallel with Existing AC Including Common T and rh Instrumentation

5.4 OPERATIONAL TESTING

The major phases of operational testing were as follows:

- Steady-state performance under controlled laboratory conditions – The LDDX was operated in the AILR flow loop at AHRI rating conditions. LDDX operating parameters, primarily desiccant flow rates to the condenser/desorber and evaporator/absorber, were adjusted so that the LDDX's cooling capacity and efficiency were mapped

- Tuning of control algorithm and system operating functions during commissioning tests in the field – When operating in the field, the LDDX must follow defined sequences for starting its compressor, pumps and fans that avoid possible damaging operating conditions (e.g., operating the LDDX-WF's refrigeration circuit before stable desiccant flow is established on its evaporator and condenser). Similarly, it must follow defined sequences for shutting down when either it receives a signal that the building's thermostat/humidistat is satisfied or it receives a fault signal from one if its fault detection elements (e.g., the over-pressure switch in the discharge line of the compressor). During commissioning, the operation of the LDDX was closely monitored as the unit was challenged with the likely routine and emergency events that lead to start-up or shutdown.

- Initial field performance under control of building thermostat–In the first phase of monitored field operation the recirculation rate of desiccant over the evaporator/absorber was fixed at a nominal value and the LDDX was controlled by the building's thermostat.

- Operation of the LDDX under conditions that change the SHR of the supplied cooling–In the second phase of monitored field operation the desiccant flow rates to the absorber and desorber were adjusted to change the concentration of the LD circulating over these elements. Changes that produced a weaker desiccant concentration on the absorber reduced the LDDX's water removal rate leading to a higher SHR for the delivered cooling.

- Operation of a conventional DX AC–As described in Section 5.2, the baseline characterization of the test site when served by a conventional DX AC (or alternately, an LDDX configured to operate as a conventional DX AC) was completed in a third phase of operational testing.

5.5 SAMPLING PROTOCOL

During the start-up phase of the LDDX's field operation, manual measurements were made of power draws for the unit's two fans and two desiccant pumps. Manual measurements were also made of the desiccant flows to the evaporator and condenser at the nominal recirculation rate and nominal flow rate of the process air. During all phases of field operation, temperature and humidity previously identified as either independent or dependent variables were sampled at 10 second intervals by a Campbell data logger and stored as one-minute averages. Other data that was continually stored as one-minute averages included: (1) total power, (2) control signal to the LDDX's desiccant recirculation valve, (3) control signal to LDDX's variable-speed compressor.

Data collection was continuous throughout the three phases of field operation. Each night 1,440 data records were downloaded via a cellular modem to AILR. This transfer occurred automatically during the field test. Data was screened daily to insure its validity. A copy of the data was stored daily in a cloud-based DropBox folder as protection against loss due to a hardware failure.

5.6 SAMPLING RESULTS

Figure 8 shows three graphs of air temperature (top graph), air rh (middle graph) and LDDX electrical power (bottom graph) for September 4, 2015. (The time shown on the x-axis is Greenwich Mean Time, which is four hours ahead of local time.)

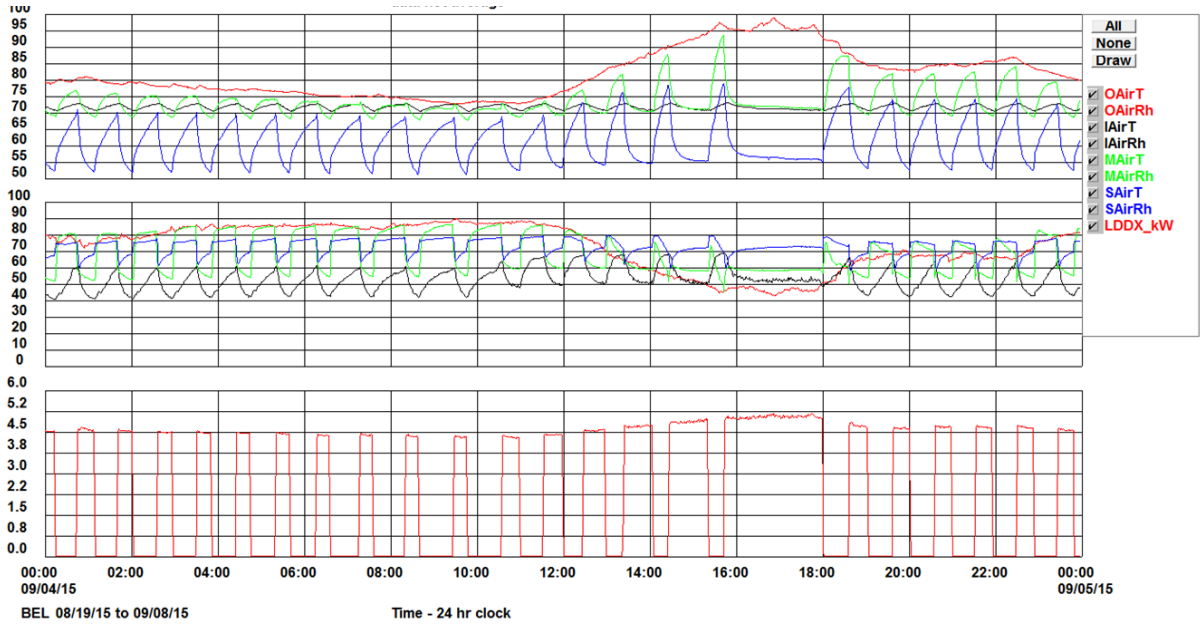

Figure 8. Sample Performance Data for Fort Belvoir LDDX, Sept 4, 2015

6.0 PERFORMANCE ASSESSMENT

6.1 LDDX-WF LABORATORY PERFORMANCE

In May 2014, the LDDX-WF prototype was installed in AILR's laboratory test loop. Following a two-week period during which the basic operation of the prototype, its control and the accuracy of its instrumentation were verified, the performance of the prototype was measured at AHRI A rating conditions[2]. During these tests the fraction of LD that was recirculated over the evaporator was changed so that the prototype's capability to modulate its SHR could be studied.

The measured SHR varied from about 0.27 to 0.50 when the recirculation valve settings increased from 50 to 90. (For comparison, the SHR for a conventional, high efficiency DX AC would be on the order of 0.75 at AHRI A rating conditions.) This behavior is expected, since the desiccant that flows over the evaporator becomes weaker as the recirculation rate increases.

The measured performance showed a trend towards lower cooling output and lower EER as the setting of the recirculation valve decreases: at a recirculation valve setting of 90, the total cooling and compressor-based EER were 2.9 tons and 12.0, respectively; at a valve setting of 50, they decreased to 2.6 tons and 10.6. This trend is also expected since the temperature of the desiccant supplied to the evaporator increases with decreasing recirculation: the warm desiccant supplied to the evaporator both increases the amount of heat that must be pumped by the compressor and reduces the total cooling supplied to the process air.

During the laboratory tests the LDDX-WF prototype supplied air that was much drier than that supplied by a conventional DX AC: the rh of the air supplied by the prototype was between 39% and 43% whereas a conventional DX AC supplies air at close to 100% rh.

The previously reported EER is based only on the prototype's compressor power. Assuming 356 W per 1,000 cfm for the process air fan, 125 W per 1,000 cfm for the cooling fan and 50 W for pump power would reduce the EERs about 23%.

Based on the laboratory tests at AHRI A conditions the LDDX-WF prototype can meet the performance objective shown in Table 1 of supplying air with a dewpoint of 47ºF. The laboratory tests also confirmed the prototype's capacity to modulate its SHR: an adjustment in the recirculation valve between settings of 50 and 90 changed the SHR from 0.27 to 0.50. Since it is expected that a valve setting greater than 90 would increase the SHR to a value greater than 0.50, the prototype should be able to satisfy the performance objective of an SHR operating range between 0.35 and 0.65.

Based on its laboratory operation, it is unlikely that LDDX-WF prototype will satisfy the efficiency performance objective listed in Table 1: operation at an EER of 11 and an SHR less than 0.4. When operating with the recirculation valve set at about 75, the prototype provided cooling with an SHR of 0.40 with a compressor-based EER of 12. However, when fan and pump power are included, this EER decreases to 9.3.

[2] The AHRI A rating conditions are 95/75 F and 80/67 F dry-bulb/wet-bulb temperatures for outdoor air and return air respectively.

The May 2014 laboratory operation of the LDDX-WF prototype was the first opportunity to measure heat and mass transfer coefficients for a wicking-fin heat and mass exchanger operating at conditions representative of an LDDX-WF's evaporator and condenser. The heat and mass transfer coefficients that were inferred from the overall operation of the LDDX-WF significantly deviated from those that were calculated from earlier tests on water-cooled (or water-heated), small-scale models of wicking-fin heat and mass exchangers. In particular, the heat transfer coefficient for the desiccant flowing over the evaporator tubes was only about 75% the value used to design the LDDX-WF prototype, but for the condenser, it was 150%. (The working hypothesis for these differences is now assumed to be changes in desiccant film thickness caused by the change in viscosity of the desiccant: the desiccant viscosity on the low-temperature evaporator tubes is about twice that on the high-temperature condenser tubes.)

With the adjusted heat and mass transfer coefficients, the computer model predicts the LDDX-WF will have a 9.3 EER (versus its design value of 11.0)

Both the wicking-fin evaporator and condenser of the LDDX-WF prototype are too small to meet the performance objective for efficiency that is shown in Table 1. A 1.5X increase in the face area of both the evaporator and condenser increases the EER of an LDDX-WF AC to a maximum value of 12.0 while maintaining a supply dewpoint of between 46°F and 47°F.

6.2 LDDX-AD LABORATORY PERFORMANCE

In June 2015, the 5-ton LDDX-Ad prototype was installed in AILR's test loop. During a three-week test period, the prototype's operation at AHRI A rating conditions was documented. Ten test sequences were performed during this laboratory phase of testing. Tests were performed under varied conditions that included: (1) two different LDs (i.e., LiCl and potassium acetate), (2) a nominal and a twice nominal desiccant flow rate, and (3) a pulsed desiccant flow rate.

The red crosses in Figure 9 are the values of SHR and EER for the eight runs that had outdoor air temperatures close to AHRI rating temperature of 95 F. However, since the flow loop for the laboratory tests could not precisely maintain the AHRI A rating conditions, there is a moderate amount of scatter in the data shown in Figure 9. Using a computer model of the LDDX-Ad that closely matched the measured performance of the eight runs shown in Figure 9 the LDDX-Ad was predicted to have an SHR of 0.403 and an EER of 11.46 at the AHRI A rating condition. This predicted value appears as the red circle in Figure 9.

Figure 9 also includes EER/SHR data points for (1) a conventional high efficiency DX AC (12.0/0.76), (2) a DX AC with a low level of reheat (9.29/0.63), and a DX AC with a high level of reheat (5.79/0.45). The LDDX-Ad's ability to efficiently supply latent cooling is apparent when compared to both DX ACs that reheat the process air.

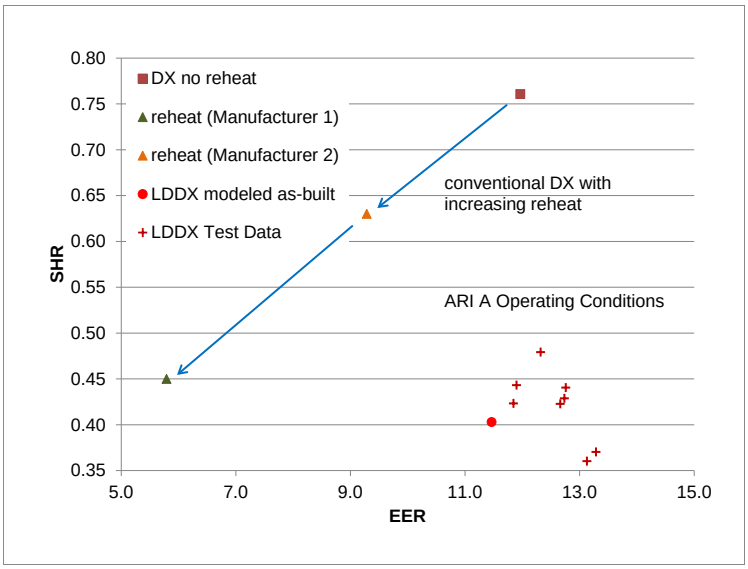

Figure 9. The Laboratory Performance of the 5-Ton LDDX-Ad

The effect that desiccant flow rate has on the SHR of the LDDX-Ad was explored in a second set of tests in which the flow of desiccant was pulsed on/off with a duty cycle (i.e., fraction time on) for desiccant delivery that varied from 0.09 to 1.0. The SHR for the delivered cooling varied from 0.42 at continuous desiccant flow to 0.62 at the lowest duty cycle. Since the SHR for the LDDX-Ad when the desiccant was turned off and the conditions of the supply air reached steady state was 0.79, the LDDX-Ad should have a controllable SHR up to this limiting value (at operating conditions close to the AHRI A rating condition).

6.3 LDDX-WF FIELD PERFORMANCE

The LDDX-WF prototype was shipped to the Picatinny Arsenal on 8/21/14. Installation was completed on 9/2/14 and commissioning of the prototype was completed on 10/1/14. A photograph of the installed prototype appears in Figure 10.

Figure 10. The Installed LDDX-WF Prototype

Unfortunately, the unseasonably cool weather at the test site in October prevented extended operation of the LDDX-WF in 2014.

Following a maintenance visit to the site on May 7, 2015, the LDDX-WF began operation for the 2015 cooling season. An analysis of the LDDX-WF's performance in early June showed that the unit was short cycling. An adjustment to the unit's control algorithm to increase the size of the dead band for zone temperature extended the minimum on-time for the unit from less than 10 minutes to over 20 minutes.

Except for the nine day period from August 17 to August 26 when the prototype was intentionally shut off and the site's original DX unit met the zone's cooling loads, the prototype was available to operate through the scheduled end of the test on September 9.

Figure 11 shows the supply air conditions from the prototype for the 2015 cooling season. Each data point is a five-minute average and the data has been screened so that transient behavior during the start of an on cycle has been eliminated.

During the 2015 cooling season the prototype ran mostly with the recirculation valve set at 0.75. However, there was a one-day period at the start of the cooling season when the recirculation valve was set at 0.70 and a nine-day period at the end of the cooling season when it was set at 0.80. The supply conditions for these low and high settings of the recirculation valve are shown in Figure 11. Unfortunately, there was insufficient data at the low and high settings to determine the impact of this controlled parameter on the SHR of the delivered cooling.

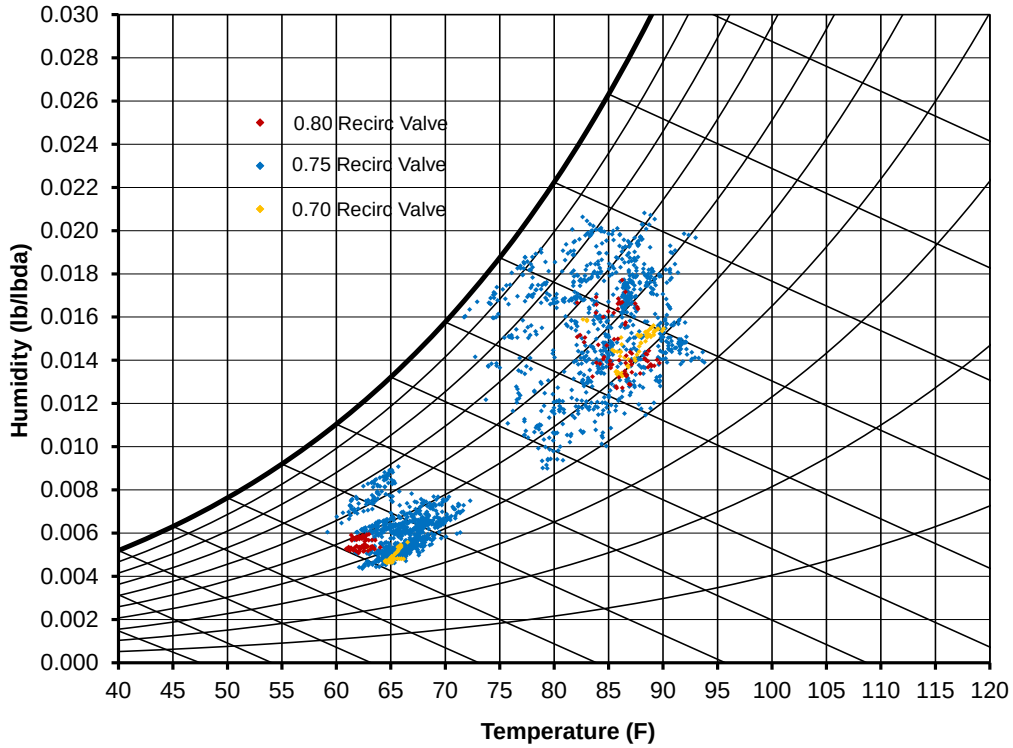

Figure 11. 2015 Seasonal Performance of the LDDX-WF Prototype

During most of the cooling season, the LDDX-WF prototype supplied air with an rh between 35% and 52%. There was a two-day period (7/21, 7/22) when the rh of the supply air increased to between 60% and 70%. Although a conclusive explanation for this increase in rh of the supply air cannot be given, it is noted that there were coincident increases and decreases in desiccant supply temperatures to the condenser and evaporator, respectively, during the two-day period. These changes in desiccant supply temperature could be caused by a temporary blockage in one of the desiccant lines, perhaps caused by an air bubble, which decreased the exchange of desiccant between the evaporator and condenser sides of the LDDX.

The prototype had a relatively modest impact on the zone rh: with the prototype operating the zone rh was close to 45% and with the DX AC operating it was close to 48%.

It is likely that the interior layout and HVAC zoning of the test site (Building 407) is masking the impact of the LDDX-WF on indoor comfort. The side of Building 407 where the LDDX-WF is sited has five other pad-mounted ACs. The zones served by these ACs all abut on a large common corridor. When doors to the zones are open, there will be a significant amount of mixing between zones that reduces the impact of the LDDX-WF on the zone where indoor measurements are made.

6.4 LDDX-AD FIELD PERFORMANCE

The LDDX-Ad prototype was shipped to the Fort Belvoir on 8/17/15. Installation was completed on 8/18/15. A photograph of the installed prototype appears in Figure 12.

Figure 12. The Installed LDDX-Ad Prototype

During a routine maintenance visit to the site on Sept 11, the AILR technician noted that the liquid-desiccant desorber pad (i.e., the pad behind the condenser coil) had settled slightly and was less securely captured by the flanges of the desiccant distributor (compared to the original installation). It was not possible to correct the problem during the Sept 11 visit and a decision was made to continue operation. On September 21, the Fort Belvoir facilities manager received a report of an unusual noise originating from the HVAC system at Building 392.

Inspection of the LDDX-Ad prototype showed that a section of the liquid-desiccant desorber pad had become disengaged from the desiccant distributor. Since the cooling season was near its end and the repair work to restore the prototype to full function was extensive, a decision was made to take the prototype off-line and return the site's original heat pump to operation.

During the 2015/2016 winter, work was performed to correct the problem that led to the failure of the LDDX-Ad's desorber pad. The source of the problem was an incompatibility between the corrugated fiberglass contact media used in the desorber pad and the solution of potassium acetate that functioned as the LD. An inspection of the failed desorber showed that the potassium acetate was dissolving/attacking the binder used for the fiberglass and softening the pad.

An exposure test in which small samples of contact media were continuously flooded with LD while under a compressive load was set up. The height of each sample was periodically measured. The measured compression of the pad was used as the metric that indicated that the LD was weakening the contact media.

Four samples of contact media were installed in the exposure test rig. One sample was the media that had failed in the LDDX-Ad prototype. Two of the other three samples also used a corrugated fiberglass media, but with alternative binders, and the third sample used a non-woven, corrugated polyester media.

During an eight-week exposure test, one of the three samples experienced essentially no compression. (For comparison, the contact media that had failed in the prototype was compressed 20%.) This media was made from corrugated fiberglass, but with a different binder. (Unfortunately, binders are treated as trade secrets by manufacturers, and so it was not possible to get a meaningful description of them from the manufacturers.)

A new desorber pad was made from the contact media that had passed the exposure test. AILR staff was on-site at Fort Belvoir on May 18/19 and May 31/June1 to install the new desorber pad and start up the prototype for summer operation. The work proceeded with no problems and data collection on the prototype's performance commenced following the May 31/June 1 visit.

The LDDX-Ad prototype operated under the command of the zone's thermostat continually from June 1 through September 27. (The prototype does not have a heating function. By late September Building 392 required heat in the early morning, which could only be provided by reinstalling the original DX heat pump.)

Figure 13 shows the supply air conditions from the prototype for the 2016 cooling season. Each data point is a five-minute average and the data has been screened so that transient behavior during the start of an on-cycle has been eliminated. Data is shown in this figure for the outdoor air, mixed air into the LDDX-Ad and supply air from the LDDX-Ad.

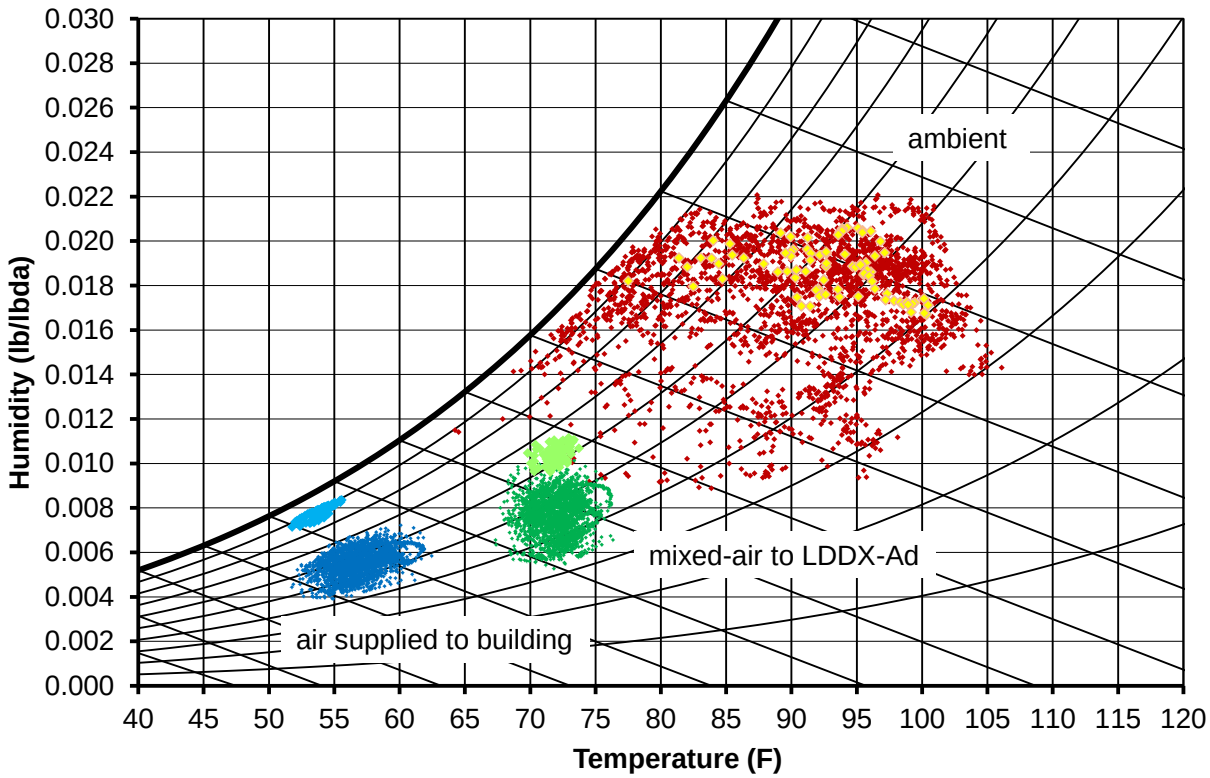

Figure 13. 2016 Seasonal Performance of the LDDX-Ad Prototype

During the 120-day test period, the LDDX-Ad operated for four days (July 30 through August 2) with the liquid-desiccant circuit inactive. In this controlled state the LDDX-Ad operates as a conventional DX AC (with slightly higher fan power due to the pressure drops across the inactive absorber and desorber pads). The lighter data points in Figure 13 were collected during the four days when the liquid-desiccant circuit was inactive.

With the liquid-desiccant circuit active, the LDDX-Ad supplied air with an rh between 42% and 70%; with the circuit, inactive, it supplied air with a rh centered on 90%.

When the supply air humidity ratio in Figure 13 is converted to dewpoint, the supply dewpoint is seen to increase from 40°F to 43°F as the ambient humidity increases from 28% to near 100%. This behavior is expected since desiccant regeneration becomes less effective as ambient rh increases. With the liquid-desiccant circuit inactive, the supply-air dewpoint is closer to 50°F.

With the liquid-desiccant circuit active, the zone rh stayed between 40% and 45%. With the circuit, inactive, zone rh was in the range of 55% to 60%.

As noted earlier, an active liquid-desiccant circuit does penalize efficiency by transferring heat rejected by the condenser to the supply air. A computer model of the LDDX-Ad predicts about a 5% drop in EER due to “heat dump” under conditions typical of operation at Fort Belvoir. However, there is about a 15% drop in EER when the liquid-desiccant circuit is active.

This larger drop in efficiency is due to the fact that with the liquid-desiccant circuit active the room humidity decreases as does the return air that the LDDX-Ad processes. With drier, lower enthalpy air entering the evaporator, the suction temperature of the refrigerant circuit decreases and the compressor power increases. Based on the data, the LDDX-Ad with an active liquid-desiccant circuit has a suction temperature that is about 3.5ºF lower than when the circuit is inactive. This drop in suction temperature accounts for about eight of the 15 point drop in EER.

6.5 MAINTENANCE ISSUES & PROTOTYPICAL DESIGN WEAKNESSES

During field operation site visits were made about once every four to six weeks at both Picatinny Arsenal and Fort Belvoir to inspect the prototypes. During these visits, air filters were replaced.

A number of other maintenance problems were addressed during the site visits. However, all these problems can be traced back to aspects of the prototypical designs that will be changed in future prototypes.

6.5.1 Picatinny Arsenal

- Desiccant dripped from the tube delivering desiccant to the evaporator; the desiccant splashed onto the floor of the LDDX and onto the soldered joints of the evaporator's U-bends causing corrosion of these joints.
- The routine cutting of the grass near the ground-mounted LDDX flung grass clippings onto the condenser; although the grass clippings did not cause operational problems after one season of operation, problems would be expected after a longer period of operation.
- There was too much flow resistance between the weak and strong desiccant sumps; the splitter valve had to restrict its range of operation to avoid a sump from overflowing.

6.5.2 Fort Belvoir

- The most serious maintenance issue was the softening and eventual collapse of the desorber pad; this problem, which occurred because the desiccant dissolved the pad's binder, has been corrected by the selection of new pad material.
- The post-test inspection of the LDDX showed desiccant-induced corrosion on the condenser; however, it is difficult to know whether the corrosion was caused by the pad failure or an unidentified leak of desiccant.
- The post-test inspection showed the supply fan free of any signs of desiccant-induced corrosion; the blades of the cooling fan had white corrosion spots (but again, desiccant-wetted pad material was drawn through the cooling fan when the pad collapsed so the source of the corrosion cannot be positively identified).
- The inlet face of the desorber pad showed signs of particulate accumulation, although the accumulation, after one cooling season, did not affect performance.
- The drainage of condensate from the pan under the DX evaporator was poor leading to condensate overflowing onto the floor of the LDDX.

7.0 COST ASSESSMENT

In HVAC applications, the LDDX provides greatest value in applications where latent loads—either internal, external, or both—are high. The conventional approach to maintaining comfortable indoor conditions in these high-latent applications is to over-cool the supply air to reduce its dewpoint and then to reheat the supply air so that the indoor dry-bulb temperature stays in a comfortable range.

Over-cool/reheat can significantly increase HVAC costs: it both requires an over-sized cooling system (i.e., its capacity must meet the design day cooling loads plus the reheat that is simultaneously applied), and demands more total cooling from the system. Although for most applications today comfortable indoor can be maintained without over-cooling/reheat (at least in theory for a well-designed, properly operated HVAC system), expected changes in building technology as well as changes in how people work will increase the need for HVAC systems that more efficiently provide latent cooling.

7.1 COST MODEL

7.1.1 Space Conditioning for Comfort

The economics of owning an LDDX depend on how the LDDX is applied. In an application such as comfort cooling, the primary cost elements entering into a purchasing decision are the hardware capital cost, installation cost and cost for consumables (i.e., primarily gas and electricity) Maintenance and other non-utility operating costs can influence the purchasing decision, but typically they are of secondary importance. And, despite research showing a strong link between indoor space conditions and worker health and productivity, "comfort" is rarely given an economic value when purchasing HVAC systems for comfort cooling.

Today, for many applications where comfort is the primary goal, indoor temperature and humidity can be acceptably controlled without over-cooling and reheating the supply air. To illustrate this point, consider an interior office zone where the primary internal loads are lighting, office equipment (i.e., plug loads) and people. With the following assumptions for an interior zone (i.e., minimal envelope and solar loads) with an "open" office plan.[3,4]

zone temperature setpoint:	75 ^{o}F [5]
ventilation rate:	5 cfm per person
lighting load:	1.11 W/ft2
plug load:	0.81 W/ft2
occupant density:	5 people per 1,000 square feet
latent load per person:	155 British Thermal unit per hour (Btu/h) (typical of seated, light office work)
sensible load per person:	245 Btu/h (typical of seated, light office work)
supply air conditions:	saturated at 55 ^{o}F ,

[3] ASHRAE Handbook Fundamentals, 2013
[4] ANSI/ASHRAE Standard 62.1-2004.
[5] "Facilities Standards for the Public Buildings Service," Table 5.1, 2005.

the office will “float” at 51% rh, which is well within the ASHRAE comfort zone.

The future evolution of the office will most likely move in a direction that reduces sensible loads and increases latent loads. In particular, the following trends have started and are likely to continue:

- LED technology is reducing the sensible load for lighting
- Flat-panel displays and lap-top computers are reducing the sensible load for office equipment
- Partitioned office space is producing occupant densities much higher than 5 people per 1,000 square feet
- The recognition that sedentary work styles have an adverse effect on health is leading to more active work styles.

For the following changes to the preceding assumptions for an interior office zone:

lighting load:	0.63 W/ft2
plug load:	0.31 W/ft2
occupant density:	13.3 people per 1,000 square feet
latent load per person:	275 Btu/h
sensible load per person:	275 Btu/h,

the office will “float” at 61%. Although this value of rh is near the upper limit of the ASHRAE comfort zone, it is being maintained without the inefficiency of overcooling/reheating the supply air. Furthermore, since there is now no economic incentive to keep indoor rh at lower levels, it is unlikely that any cooling technology that provides an enhanced latent capacity will successfully compete in this broad segment of the comfort cooling market.

7.1.2 Solving Building Humidity Problems

Despite the preceding simplified analysis showing that a very large segment of the HVAC market—comfort conditioning of office buildings—can efficiently maintain indoor comfort using conventional means, the LDDX still has the potential to significantly reduce O&M in DOD buildings. Using Fort Belvoir as an example, Mr. William Elliott (Master Planner, Facilities and Energy) reported that for the 38 buildings under his management, five buildings have sections where high humidity is causing maintenance or operational problems. As a rough estimate, approximately 5% of the floor space under his management would benefit from the LDDX or other humidity control technology.

In “humidity critical” applications similar to those identified by Mr. Elliott, the magnitude of the potential savings for the LDDX-Ad can be estimated by comparing the Moisture Removal Efficiency (MRE—expressed as pounds per hour of moisture removal per kilowatt of power) when both the LDDX-Ad and a conventional overcool/reheat DX AC supply 45°F dewpoint air. In this comparison, the conventional DX AC supplies nearly saturated air at 45°F (which may or may not be reheated). The LDDX-Ad supplies 45°F dewpoint air by first cooling the supply air to saturated conditions at 53°F in its evaporator stage and then near-adiabatically drying the air to 50% rh and 64.5^{o}F (i.e., a 45°F dewpoint) in its desiccant stage.

Assuming that both cooling systems operate with a suction temperature that is 12°F below the air temperature leaving their evaporator and they both operate at a 105°F condensing temperature (which might correspond to an ambient between 85°F and 90°F), the compressor-based EER for the LDDX-Ad and the conventional DX AC will be 16.4 and 14.1 respectively.

The lower compressor efficiency is only one of two important parameters that determine the cooling system's MRE. The conventional DX AC pumps more heat than the LDDX-Ad when it cools air to saturated conditions at 45°F (as opposed to the 53°F air leaving the evaporator stage of the LDDX-Ad). In this example, the DX AC pumps 1.47 times more heat than the LDDX-Ad when both system supply air at a 45°F dewpoint[6]. When the lower compressor-based EER is combined with the conventional DX AC's requirement to pump more heat, the LDDX-Ad is calculated to lower the electrical power for cooling in high latent applications by 41.5%.

Thus, for an application where humidity problems within a building must be corrected the economics of ownership are likely to steer the purchasing decision towards the LDDX-Ad. While the LDDX-Ad will have a higher first cost when expressed in terms of dollars per compressor tons, an application in need of humidity control is likely to need fewer gross tons of cooling when the LDDX-Ad is installed compared to a conventional overcool/reheat AC, i.e., as illustrated in the preceding example, the conventional AC might be specified at 1.47 times higher compressor tons to make up for cooling lost to reheat. As previously noted, the core of the LDDX-Ad is a conventional DX AC. The liquid-desiccant circuit that is incorporated into the unit is not a major item on the LDDX-Ad's bill of materials. Perhaps the biggest impact on selling price will be the higher profit margins demanded by manufacturers that accept the risk of marketing a new HVAC technology.

The field tests did not uncover any maintenance requirements that could not be met by the routine servicing now performed by HVAC maintenance staff (i.e, the replacement of air filters is the most important maintenance requirement). Neither the contact media nor the LD is now expected to need routine replacement, and there was no detectable degradation in performance due to possible changes in the contact media. However, the one-year duration of the field test is obviously too short to identify all possible degradation mechanisms within the LDDX-Ad. The OEM costs of the corrugated media and the LD charge in the 5-ton LDDX-Ad prototype that was tested at Fort Belvoir are approximately $300 and $190, respectively. Allowing for a 50% mark-up by a service contractor and a $300 labor charge, a complete replacement of media and desiccant would cost approximately $1,000. Replacement of the media and the LD if required every three years should not be a major factor in a decision to purchase the LDDX-Ad.

7.1.3 Mitigating Corrosion Damage of Stored Material

The Air Force spends $4.5 billion annually on aircraft maintenance related to corrosion. The source of this corrosion frequently is airborne chlorides that settle on metal parts and sensitive avionics and then absorb moisture from the air to create an electrolyte that promotes galvanic corrosion. Thus, a comprehensive approach to protecting stored material from corrosion must both limit the ambient rh and filter chloride particles from the air.

[6] This calculation assumes that air enters the cooling system at 80°F and 50% rh.

A Corrosion Mitigation System (CMS) based on dehumidification must keep storage areas at a rh significantly lower than that required for indoor comfort (i.e., 30% to 40% versus 50% to 60%). In a parallel project funded under the DOD SBIR program[7], AILR is exploring ways that a LD AC that operates on the same principles as LDDX-Ad can lower the cost for supplying deeply dried air either directly to parked aircraft or to shelters where aircraft and Aerospace Ground Equipment (AGE) are stored.

An aircraft shelter that is kept at 78°F and 35% rh has an indoor dewpoint of 48°F. A cooling system that pressurized the shelter with ambient air that has been dried to a 45°F dewpoint should meet the requirements of this shelter.

As previously discussed, the LDDX-Ad much more efficiently supplies air at 45°F dewpoint than a conventional DX AC that dehumidifies by overcooling: the LDDX-Ad is calculated to lower the electrical power in this application by 41.5%. Also, since the compressor tonnage is significantly less for the LDDX-Ad (i.e., the conventional DX AC has 1.47 times the compressor tonnage), the first cost for the two options will be comparable. The LDDX-Ad, once commercially available, would be an important part of corrosion mitigation strategy based on tight humidity control of storage facilities.

7.2 COST DRIVERS

With non-utility O&M requirements/costs projected to be similar to those of conventional DX ACs, the most important drivers influencing the adoption of the LDDX will be (1) first cost and (2) utility operating costs. As previously discussed, in applications with high latent loads, the LDDX's ability to serve the latent loads with significantly less compressor tonnage will lead to first-cost savings that counter possible higher first costs attributed to either (1) the technologies increased complexity (i.e., the LDDX requires a LD subsystem) or (2) the higher profit margins demanded by the manufacturer of the novel technology.

It is likely that early sales to DOD of the LDDX will not be driven solely by the need for improved indoor comfort (i.e., the option to allow indoor workspaces to float at a rh at or above the ASHRAE-defined comfort range will always be the lowest cost option). However, when high indoor humidity leads to building maintenance problems associated with mold and mildew or when high indoor humidity adversely affects the operation of a laboratory, then an investment in the LDDX can be justified.

Perhaps the most important, broad driver for the adoption of the LDDX by DOD will be the need to control corrosion by storing material in drier environments. In this application, it is likely that the first cost and operating cost for the LDDX will be small compared to the reduced maintenance needs or the economic impact of failures in sensitive avionics caused by corrosion.

[7] "Liquid Desiccant System for Combined Humidity and Chloride Control," SBIR Phase II Contract No. FA8501-16-C-0003.

7.3 COST ANALYSIS AND COMPARISON

The work reported here has advanced the LDDX from a TRL of 5 to TRL 7. At this TRL, the field-tested prototypes were not manufacturable designs. AILR is now working with a manufacturer to build and test a prototype that is based on a manufacturable design. This prototype is scheduled to operate in the field in June 2017.

At TRL 7, it is not possible to project a meaningful selling price for the LDDX. And, without a meaningful selling price, it is not possible to complete a life-cycle cost analysis as outlined by Handbook 135[8].

[8] "Life-Cycle Costing Manual for the Federal Energy Management Program," Handbook 135

Page Intentionally Left Blank

8.0 IMPLEMENTATION ISSUES

The engineers that specify HVAC equipment are extremely risk averse. This aversion is understandable since the consequences of equipment outage in terms of lost work or process disruptions can be quite severe.

The LDDX, with its reliance on a LD, will be viewed as a risky technology within the HVAC industry. And, whether or not this assessment of the LDDX is fair, it will be supported by past failures of two different companies to commercialize a compressor-based, liquid-desiccant AC. These two companies—DryKor and Advantix—both aggressively sold liquid-desiccant ACs, a significant number of which either had operational problems or did not perform as specified. When both companies ceased operation, they left their customers with liquid-desiccant ACs that had no support for servicing.

AILR is now working with a manufacturer of dehumidifiers to field operate a 6,000-cfm LDDX-Ad prototype that will be designed and built by the manufacturer. This prototype is sufficiently different from the DryKor and Advantix products that the earlier problems of these manufacturers should not affect the latest commercialization effort. Perhaps more importantly, the manufacturer now working on this project has a sufficiently large presence in the HVAC industry that possible customer concerns regarding product support and product reliability will not discourage sales.

Page Intentionally Left Blank

APPENDIX A POINTS OF CONTACT

Point of Contact Name	Organization Name Address	Phone Fax Email	Role in Project
Dr. Andrew Lowenstein	AIL Research*	609-779-2605 x101	Principal Investigator
Mr. Jeffrey A. Miller	AIL Research *	609-799-2605 x102	Lead Engineer
Mr. William Elliott	Night Vision and Electronic Sensors Directorate (NVESD), Fort Belvoir	703-704-2698	On-Site Coordinator
Ms. Gricel Rivera	Picatinny Arsenal	973-724-3448	On-Site Coordinator

ESTCP Office
4800 Mark Center Drive
Suite 17D08
Alexandria, VA 22350-3605
(571) 372-6565 (Phone)
E-mail: estcp@estcp.org
www.serdp-estcp.org