ESTCP
Cost and Performance Report

(MM-0418)

Coaxial EMI Sensor for UXO Detection and Discrimination

May 2008

ENVIRONMENTAL SECURITY
TECHNOLOGY CERTIFICATION PROGRAM

U.S. Department of Defense

COST & PERFORMANCE REPORT
Project: MM-0418

TABLE OF CONTENTS

Page

1.0 EXECUTIVE SUMMARY 1
- 1.1 BACKGROUND 1
- 1.2 OBJECTIVES OF THE DEMONSTRATION 1
- 1.3 REGULATORY DRIVERS 1
- 1.4 DEMONSTRATION RESULTS 2
- 1.5 STAKEHOLDER/END-USER ISSUES 2

2.0 TECHNOLOGY DESCRIPTION 3
- 2.1 TECHNOLOGY DESCRIPTION AND APPLICATION 3
  - 2.1.1 Hardware 3
  - 2.1.2 Software 5
- 2.2 PROCESS DESCRIPTION 5
- 2.3 PREVIOUS TESTING OF THE TECHNOLOGY 6
- 2.4 ADVANTAGES AND LIMITATIONS OF THE TECHNOLOGY 6

3.0 DEMONSTRATION DESIGN 7
- 3.1 PERFORMANCE OBJECTIVES 7
- 3.2 SELECTING TEST SITES 7
- 3.3 TEST SITE HISTORY/CHARACTERISTICS 8
- 3.4 PHYSICAL SETUP AND OPERATION 8
  - 3.4.1 Demonstration Setup and Start-Up 9
  - 3.4.2 Period of Operation 9
  - 3.4.3 Area Characterized 9
  - 3.4.4 Demobilization 9
- 3.5 ANALYTICAL PROCEDURES 9
  - 3.5.1 Predemonstration Test and Analysis 9
  - 3.5.2 Operating Parameters for the Technology 9
  - 3.5.3 Experimental Design 10
  - 3.5.4 Analytical Methods 10

4.0 PERFORMANCE ASSESSMENT 11
- 4.1 PERFORMANCE DATA 11
- 4.2 PERFORMANCE CRITERIA 12
- 4.3 DATA ASSESSMENT 13
- 4.4 TECHNOLOGY COMPARISON 13
  - 4.4.1 Motion Induced Noise 13
  - 4.4.2 Environmental Noise 15
  - 4.4.3 UXO Detection 15

TABLE OF CONTENTS (continued)

Page

5.0 COST ASSESSMENT 17
- 5.1 COST REPORTING 17
- 5.2 COST ANALYSIS 18
- 5.3 COST COMPARISON 18

6.0 IMPLEMENTATION ISSUES 21
- 6.1 COST OBSERVATIONS 21
- 6.2 PERFORMANCE OBSERVATIONS 21
- 6.3 OTHER SIGNIFICANT OBSERVATIONS 21
- 6.4 LESSONS LEARNED 21
- 6.5 END-USER ISSUES 22
- 6.6 APPROACH TO REGULATORY COMPLIANCE AND ACCEPTANCE 22

7.0 REFERENCES 23

APPENDIX A POINTS OF CONTACT A-1
APPENDIX B ROC CURVES – DYNAMIC B-1

LIST OF FIGURES

Page

Figure 1. GEM-5/Man-Portable Dynamic Blind Grid Pd for Response and Discrimination Stages Versus Their Respective Pf Over All Ordnance Categories Combined. 2

Figure 2. Coaxial Coil Configuration Schematic Showing Central Tx, Symmetric Receiver Coils (Rx1 and Rx2) Wired in Differential Mode to Form the Signal Channel. 4

Figure 3. Electronics Block Diagram Showing Functional Modules. 4

Figure 4. Coaxial System with Tubular Structure. 5

Figure 5. Arial Photograph of the APG Standardized UXO Technology Demonstration Site. 8

Figure 6. The Static (x=0250) and Motion (x>250) Noise Obtained Using both GEM-5 and GEM-3 Confirms Coaxial-Coil Immunity. 13

Figure 7. Q-Coil Spectral Responses for the GEM-3 and GEM-5 at 22 cm Vertical Distance from Bottom of Sensor. 14

Figure 8. The MSR, the Static and the Motion SNR as a Function of Frequency for GEM-5 (solid circles) and GEM-3 (open circles). 14

Figure 9. The EM Data Collected Using the GEM-5 and the GEM-3 When the Noise Source is Off (x=0450) and On (x > 450) Shows Coaxial-Coil Insensitivity. 15

Figure 10. GEM-3 ATV Towed Apparent Conductivity (left) Compared to the Coaxial Coil Sensor (right) Apparent Conductivity Over Part of the Calibration Grid at the APG Demonstration Site Shows Improved Target Detection in a Dynamic Survey. 16

Figure 11. GEM-5 Seven Sensor Array Acquiring Data. 22

Figure B-1. GEM Five-Man Portable Dynamic Blind Grid Pd for Response and Discrimination Stages Versus Their Respective Pf over All Ordnance Categories Combined. B-1

Figure B-2. GEM Five-Man Portable Dynamic Blind Grid Pd for Response and Discrimination Stages Versus Their Respective PBA over All Ordnance Categories Combined. B-1

Figure B-3. GEM Five Man Portable Dynamic Blind Grid Pd for Response and Discrimination Stages Versus Their Respective Pf for All Ordnance Larger Than 20 mm. B-2

Figure B-4. GEM Five-Man Portable Dynamic Blind Grid Pd for Response and Discrimination Stages Versus Their Respective PBAs for All Ordnance Larger Than 20 mm. B-2

LIST OF TABLES

Page

Table 1. Performance Objectives. 7
Table 2a. Performance Under Static Acquisition 11
Table 2b. Performance Under Dynamic Acquisition 11
Table 3. Performance Criteria. 12
Table 4. Cost Report – Geophex, Ltd. 18

ACRONYMS AND ABBREVIATIONS

A/D	analog-to-digital
APG	Aberdeen Proving Ground
ATC	Aberdeen Test Center
ATV	all-terrain vehicle
DGPS	Differential Global Positioning System
DoD	Department of Defense
DSP	digital signal processor
EM	electromagnetic
EMI	electromagnetic induction
ESTCP	Environmental Security Technology Certification Program
FAR	false alarm rate
GEMTADS	GEM towed array detection system
GPS	global positioning system
MSR	motion-noise to static noise ratio
MTADS	multisensory towed array detection system
PBA	probability of background alarm
Pd	probability of detection
Pf	probability of false alarm
ppm	parts-per-million
PPS	Precise Positioning Service
ROC	receiver operator characteristic
Rx	receiver channel
SNR	signal-to-noise ratio
Tx	Transmitter coil
UXO	unexploded ordnance

This page left blank intentionally.

ACKNOWLEDGEMENTS

Evaluation of the coaxial electromagnetic induction (EMI) technology was funded by the Environmental Security Technology Certification Program (ESTCP) as project MM-0418.

This page left blank intentionally.

1.0 EXECUTIVE SUMMARY

1.1 BACKGROUND

The environmental problem addressed with this technology concerns the task of detecting buried unexploded ordnance (UXO) in a cluttered site, with discrimination between them. A technology that can accomplish UXO detection with clutter discrimination in an efficient manner (high production rates, low cost of operation) would provide the Department of Defense (DoD) with a tool that could have great impact on the cost of UXO cleanup.

The coaxial coil configuration electromagnetic induction (EMI) sensor is motivated by the potential advantages of the common mode rejection of electromagnetic noise from external sources. The balanced differential receiver (gradient) measurements reject voltages induced by noise fields that are uniform over distances on the scale of the receiver coil separation, including natural sources such as sferics (distant lightning induced), geomagnetic storms (sun spot induced), platform motion in the geomagnetic field, and man-made sources such as power line fields. The platform motion induced noise has been shown to be particularly problematic for the vehicular towed concentric-coil system (GEM-3) in the operational frequencies below 100 Hz. One penalty paid with the coaxial geometry is an increased height of the transmitter coil, reducing the excitation field strength over the target. There is a trade-off between increasing the coil separation to increase the difference signal and reducing the separation to reduce the transmitter-target distance, and the design must provide a good compromise for the anticipated target depth envelope. Also, small separations pose an engineering challenge at achieving adequate bucking (receiver coil balance). For this seed project, the objective was to verify these principles rather than demonstrate an operational sensor. The extension to a multireceiver array with single large transmitter loop constitutes the implementation of an efficient system for wide-area coverage using a vehicle-towed platform.

Noise associated with platform motion and from external electromagnetic interference is shown to be less, as proposed. We note that depending on target depth, the static signal-to-noise ratio (SNR) is sometimes better for the GEM-3 owing to the transmitter coil distance.

1.2 OBJECTIVES OF THE DEMONSTRATION

The objectives of the demonstration were to show that data were not significantly degraded by motion on a wheeled-cart platform from normal motion during surveying, and that there was greater immunity to ambient noise than more conventional EMI sensors. Standard performance goals for EMI sensors in terms of probability of detection (Pd) and false alarm rate (FAR) also apply and are further defined in Section 3.1.

1.3 REGULATORY DRIVERS

This program was undertaken in response to the ESTCP Topic 1: UXO Detection, Discrimination, and Remediation.

1.4 DEMONSTRATION RESULTS

We demonstrated the validity of the hypotheses that the coaxial configuration was more immune to both motion-induced and ambient noise by showing little increase in noise between static and dynamic (rolling cart) conditions and showing less noise from an adjacent transmitter than observed with a GEM-3. Pd, probability of false alarm (Pf) and other metrics for static (stopping over grid points) and dynamic (continuous rolling) are summarized in Section 4, Table 2. Here we present the receiver operator characteristic (ROC) curve for the dynamic case in Figure 1.

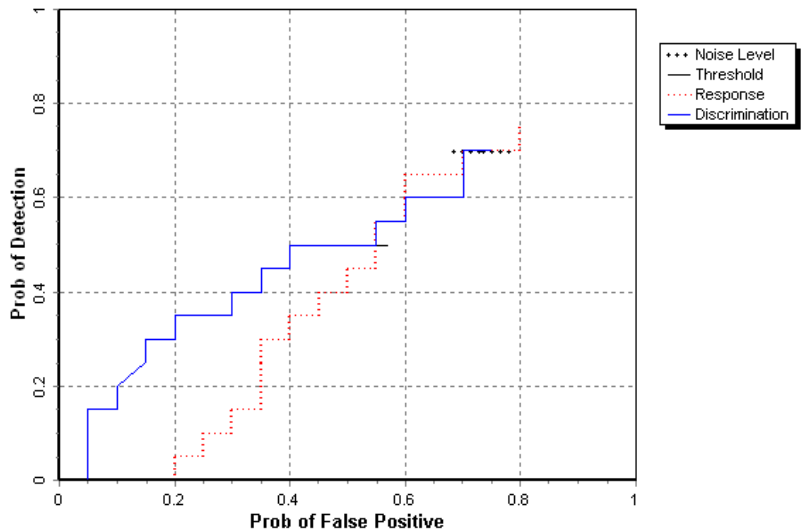

Figure 1. GEM-5/Man-Portable Dynamic Blind Grid Pd for Response and Discrimination Stages Versus Their Respective Pf Over All Ordnance Categories Combined.

1.5 STAKEHOLDER/END-USER ISSUES

This demonstration addressed decision-making issues concerning end users associated with the applicability of the coaxial-coil EMI technology for their specific UXO detection and discrimination mission needs. Operational performance under static and dynamic conditions was assessed, and comparisons with existing concentric-coil systems (GEM-3) is made below.

2.0 TECHNOLOGY DESCRIPTION

2.1 TECHNOLOGY DESCRIPTION AND APPLICATION

2.1.1 Hardware

The EMI system consists of three basic components: the coaxial-coil sensor, the electronics console, and the user interface (control and display) module. This functional architecture, as well as the essential features of the electronics, is the same as our existing EMI sensors. The key innovation is the coaxial coil configuration, in which the receiver channel (Rx) is the difference in voltage between two coils symmetrically arranged around the coaxial transmitter coil (Tx), shown schematically in Figure 2. The sensor axis is oriented vertically during operation, illuminating a target directly below with a vertical primary field, and sensed by the perturbation of the field from the eddy currents and magnetic polarization induced in the target, which breaks the symmetry between the two receiver channel coils. When the target distance is less than the coil separation, the bottom coil measures relatively large (vertical component) field perturbation while the upper coil "sees" relatively no change; for deep targets, the receiver channel acts as a perturbed vertical field gradiometer. More precisely, the gradient integrated from the bottom to top coil is measured.

Any noise source that is uniform over the volume of the sensor is common mode between the two coils, and will be suppressed by virtue of the differential receiver channel mode. This will include electromagnetic fields from distant sources such as sferics (ionosphere-atmosphere wave guide propagation from tropical lightning) and sunspot induced geomagnetic fluctuations, as well as the voltage induced by platform angular motion in the static geomagnetic field.

The architecture of the electronics (Figure 3) is the same as the "next generation" GEM-3 (smaller, faster analog-to-digital (A/D), iPAQ® user interface and data logger) with high-power (48-volt) transmitter option (as in the GEMTADS system built for the Naval Research Laboratory).

The actual prototype cart-mounted system as demonstrated is shown in Figure 4. The electronics modules and battery pack are mounted on the pushcart handle.

Details of the electronics design (including the Tx pulse-width modulation scheme for generating the digitally controlled multifrequency hybrid current waveform, the front-end analog and A/D converter receiver electronics, DSP and power management module) have been described in reports for other programs (Final Report and Cost & Performance Report, ESTCP Project MM-0036, Handheld Broadband Electromagnetic UXO Sensor). The electronics have evolved from the original GEM system, with size and cost reductions using newer components as well as elimination of built-in data storage since the commercial handheld computer can perform that task as well as user interface.

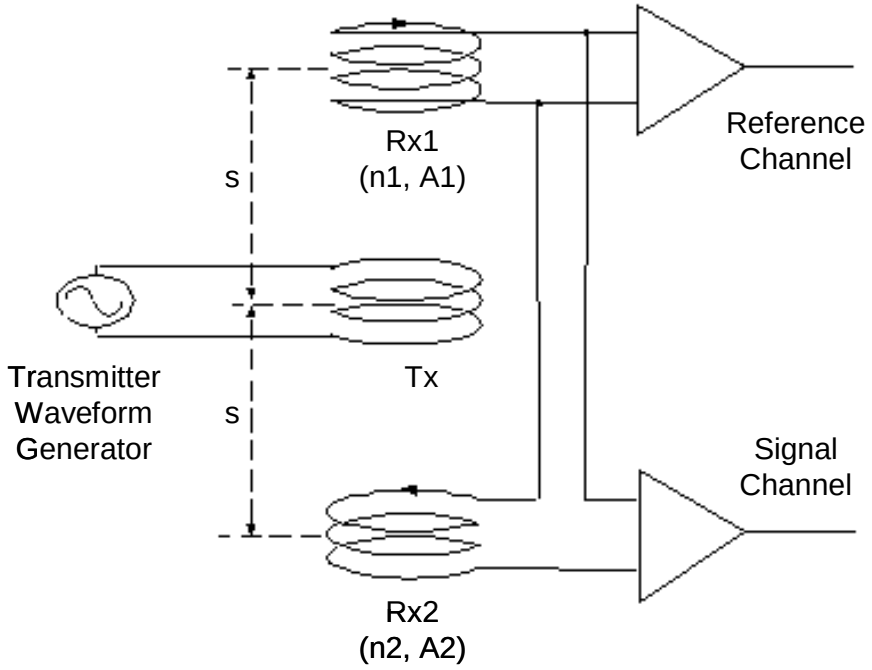

Figure 2. Coaxial Coil Configuration Schematic Showing Central Tx, Symmetric Receiver Coils (Rx1 and Rx2) Wired in Differential Mode to Form the Signal Channel.
(The upper coil is used as a primary field reference for measurement phase and normalization, providing a dimensionless sensor output in parts-per-million [ppm] independent of the transmitter current.)

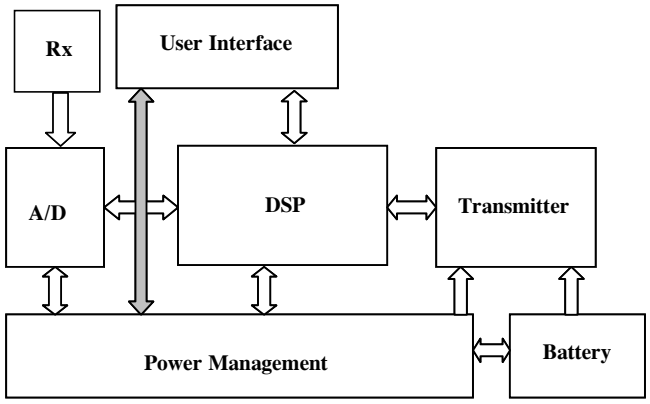

Figure 3. Electronics Block Diagram Showing Functional Modules.
(Receiver front-end [Rx], A/D converter, digital signal processor [DSP], and power management monitors and regulates battery, battery charging, and voltages; transmitter current waveform generator [Tx] is a separate module triggered by the DSP.)

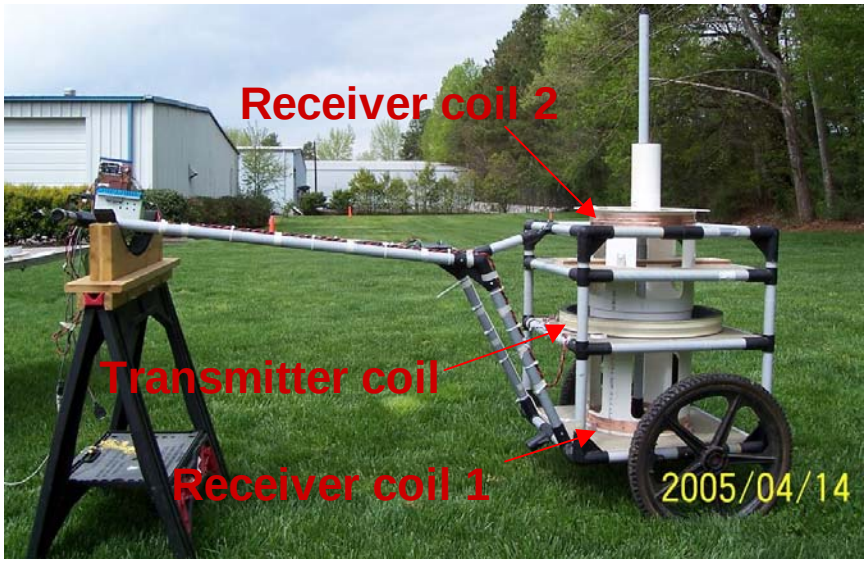

Figure 4. Coaxial System with Tubular Structure.
(The structure has large rectangular holes to reduce weight and wind cross section. It incorporates 25 cm radius transmitter coil and 16 cm radius receiver coils and coil separation of 30 cm.)

The differential global positioning system (DGPS) is tightly integrated by passing the DGPS data stream through the GEM electronics and stamping the EMI and DGPS data with a common DSP time tag based on the global positioning system (GPS) Precise Positioning Service (PPS) Universal Time Clock.

The broadband multifrequency capability is accomplished utilizing a continuous transmission hybrid waveform containing a superposition of all of the operational frequencies, typically about 10, logarithmically spaced from 90 Hz to 70 kHz. Odd harmonics of 30 Hz are used exclusively (in the United States) to avoid power line 60 Hz harmonics noise.

2.1.2 Software

The algorithm used for discrimination is a simple fit, with arbitrary weights, to a mix of the two library spectral response modes (transverse and longitudinal) (Norton et al., 2001a). Geometry is not modeled so data sample positions are not needed, nor are target position and orientation. The best-fit library target for a set of samples acquired at the peak of the Response Stage is determined, with goodness of fit as a confidence criteria computed from the fitting error as described above to generate the Discrimination Stage. The algorithm incorporated a new module for estimating target depth and dip angle based on library fit weighting factors; depth information must be recorded in the library, and the computed depth depends on the item and therefore can be erroneous if an incorrect match is made.

2.2 PROCESS DESCRIPTION

The system is factory calibrated using a ferrite target to remove the system transfer function (compensation is applied in real time by the DSP) so that the intrinsic spectral response of the

target can be measured directly (and it will be the same as the spectrum measured by a calibrated GEM-3 assuming the lowest order [dipolar] mode dominates). For the target identification scheme, training data are acquired using UXO samples; this can be done with targets in air and targets buried in a calibration grid if both orientations are available. Training spectra are stored in a library for spectral matching during the operational survey.

The expected Pd depends primarily on the range of burial depths; some of the deeper targets in the calibration grid could not be detected, and, presuming similar depths occur in the blind grid, some targets were likely undetectable. The spectral matching was expected to lower the FAR, but with the wide range of anticipated UXO in terms of size and metal content, the corresponding wide range of UXO spectra results in many clutter items having spectra similar to an ordnance item. Also, because of the low signal to noise ratio (SNR) for the deeper UXO, a low threshold is required to recognize them as UXO and thus reduce the ability to declare clutter.

The system operates as a typical cart-pushed EMI system and requires little training for data acquisition. Data processing is automated to a large extent but requires some expertise.

2.3 PREVIOUS TESTING OF THE TECHNOLOGY

Initial testing of the coaxial coil EMI technology was first performed at the Geophex facility in Raleigh, North Carolina. Geophex has a 10 m x 10 m test bed in which 21 metal pipes of various sizes, some ferrous (steel) and some nonferrous (3 aluminum, 2 copper), have been buried at depths ranging from 10 to 110 cm depth. We have also used this test bed during GEM-3 development to test the performance of each generation of GEM technology.

No other formal demonstration testing of the coaxial coil EMI technology had been done prior to this demonstration.

2.4 ADVANTAGES AND LIMITATIONS OF THE TECHNOLOGY

The chief advantage of this technology comes from the coil configuration providing common-mode noise rejection, combined with the multifrequency capability for potential target discrimination. Also, this coil configuration can be applied to a simultaneously operating array in a straightforward manner.

Limitations relate to the increased transmitter coil height diminishing target response strength. This technology is not yet as mature as existing systems and has not been fully optimized in terms of design details. Mechanically, it is somewhat more difficult to construct than a concentric coil sensor. Also, a handheld version may not be practical, although it should not be precluded.

3.0 DEMONSTRATION DESIGN

3.1 PERFORMANCE OBJECTIVES

The standard performance metrics for UXO detection/discrimination technology are shown in Table 1. Since the operators will be the demonstrators for this demonstration, Operator acceptance may be interpreted as evaluation by on-site Aberdeen Test Center (ATC) personnel or their responsible parties in charge of demonstration oversight. Such evaluation can be made by observation of production rates and field problems that arise. The quantitative objectives performance will be determined by ATC resulting from the scoring of the submitted dig sheets.

Table 1. Performance Objectives.

Type of Performance Objective	Primary Performance Criteria	Expected Performance (Metric)	Actual Performance (Objective met?)
Qualitative	Ease of use	Operator acceptance	acceptable
	Field worthiness	Operator acceptance	acceptable
Quantitative	Percent detected	> 95%	50%
	False alarms	< .1	.50

3.2 SELECTING TEST SITES

Aberdeen Proving Ground (APG)

The APG Standardized UXO Technology Demonstration Site is one of two recently completed facilities designed to provide UXO detection and discrimination technologies test scenarios that evaluate the performance and operational usability under the realistic range of conditions that will be met during assessment and clearance operations. These conditions include various vegetative states from barren to moderate brush to densely wooded, and various terrain conditions from open and flat to rugged. These conditions provide opportunity for vehicular towed systems, manual pushcart systems, and handheld systems. The size of the facility is sufficient to provide meaningful performance metrics such as probability of detection, false alarm rates, and production rates.

The choice of the facility at Aberdeen, in Harford County, Maryland, was made for proximity to the operator's location of business (Raleigh, North Carolina) and facility availability. An aerial photograph of the site is shown in Figure 5.

Only the calibration and blind grids were utilized for this demonstration because the technology is not yet operationally mature, and the goal is to confirm specific performance advantages compared to the GEM-3.

3.3 TEST SITE HISTORY/CHARACTERISTICS

APG is an Army facility that has been used for weapons and military vehicle testing since 1917. It encompasses 117 km^2 of land, much of it forested, between Baltimore and Philadelphia. The UXO demonstration site is a seeded site for controlled testing, and includes: (1) calibration lanes (ground truth revealed) for system training and target characterization, and a set of blind (ground truth withheld) areas for testing a range of scenarios; (2) blind test grid—a 1,600 m^2 rectangular grid including access lanes separating 400 discrete 1 m x 1m square interrogation points; (3) open road terrain—large area that can be surveyed with vehicular towed systems, some varied, moderately rough terrain and vegetation; (4) moguls—an area with moguls and craters of about ± 1 m vertical relief, requiring manual data acquisition, likely handheld sensor configuration; (5) wooded—various vegetation including significant areas of dense trees. Information about the UXO test site at APG can be found at http://www.atc.army.mil/fac_guide/facilities/standarduxo.html

Figure 5. Arial Photograph of the APG Standardized UXO Technology Demonstration Site.

3.4 PHYSICAL SETUP AND OPERATION

Present operation of the demonstration sites is restricted to controlled testing and performance evaluation of UXO detection and discrimination technologies. It is a cleaned and seeded area with no ongoing operational remediation. No site characterization was performed prior to the demonstration.

3.4.1 Demonstration Setup and Start-Up

The system was fully assembled and transported in a van; the DGPS was mounted and the base station set up. Start-up included recording a library of target responses from UXO samples provided by ATC. Each item requires less than a minute.

3.4.2 Period of Operation

The period of operation at APG was April 19-26, 2005; however, we were engaged in simultaneous demonstration of another sensor, and only a fraction of this time interval (April 19 and April 20 and morning of April 26) involved the coaxial coil system.

3.4.3 Area Characterized

Only the calibration and blind grids were characterized; the blind grid was surveyed twice – once statically over each grid point plus a background point, and once dynamically, continuously recording in survey mode along each grid lane. The calibration area was surveyed only dynamically.

3.4.4 Demobilization

The coaxial EMI technology requires no alteration of the environment, and no site restoration was required except for flag removal and lane string removal. All Geophex equipment was removed at the completion of the demonstration.

3.5 ANALYTICAL PROCEDURES

3.5.1 Predemonstration Test and Analysis

The GEM-3 system has previously been demonstrated at APG, and a comparison between that and the coaxial configuration is desirable. However, there were differences in the testing that preclude a straight comparison: (1) the blind grid has been reseeded (presumably with similar targets but in different locations, so a performance comparison can still be made); (2) The GEM-3 dynamic testing in the blind grid used an all terrain vehicle (ATV) towed sled platform, while the coaxial was surveyed with a manually pushed wheeled cart; (3) data were recorded over only part of the calibration area with the towed GEM-3, and no static data were recorded over the calibration area for the GEM-3.

Critical comparisons for the purpose of this project, shown below, include the noise envelope change between static and dynamic conditions for the two sensors and sensitivity to an external electromagnetic (EM) transmitter as a simulated noise source.

3.5.2 Operating Parameters for the Technology

Ten frequencies were recorded simultaneously: 90, 210, 390, 750, 1470, 2910, 5850, 11430, 21690, 41010Hz, continuously at 5 Hz sampling; static data were sampled for 2 seconds at each position.

3.5.3 Experimental Design

The blind grid was surveyed twice: static data were recorded and processed over the grid square centers and an adjacent background point, and dynamic data recorded with the wheeled pushcart configuration and pushed continuously at a steady walking speed along grid lanes. The calibration grid was also recorded dynamically. Dynamic survey navigation utilized DGPS with a local base station; the rover and antenna mounted directly above the sensor.

We used target detection during post processing based on total apparent conductivity using all frequencies (response stage) to determine if a potential UXO existed in each square, and if so, we executed the matching algorithm to identify the target, with misfit providing the discrimination stage value (mapped into a confidence rank) for clutter/UXO classification. Background was removed using explicit background measurements for the static test and a median filtered background removal for the dynamic test. The prerecorded library provided the training data.

3.5.4 Analytical Methods

The analytical/testing method consists of enumeration of UXO detected (i.e. Pd) and non-UXO declared as UXO (i.e. Pf), and blank grids declared as having a UXO (probability of background alarm [PBA]). Confidence ranking allows generation of ROC. Correct UXO identification will also be scored.

4.0 PERFORMANCE ASSESSMENT

4.1 PERFORMANCE DATA

The results of the ATC blind grid demonstration are summarized in Table 2 with a column showing the results from a GEM-3 demonstration performed in 2003. Note that the site was reseeded between these tests, and that the GEM-3 was sled-mounted and towed with an ATV, while the GEM-5 was built into a wheeled cart and pushed by hand.

APG Blind Grid – Static

Table 2a. Performance Under Static Acquisition
(stationary cart).

Performance Criteria	Expected	Confirmation Method	GEM-5 (spot)	GEM-3 (2003 cart)
Response Stage		Government evaluation		
1) Probability of detection	1) > .95		1) .65	1) .85
2) Probability of false alarms	2) > .95		2) .65	2) .85
3) Background alarms	3) < .01		3) .30	3) .40
Discrimination Stage		Government evaluation		
1) Probability of detection	1) > .85		1) .55	1) .70
2) Probability of false alarms	2) < .2 (< 20% clutter declared UXO)		2) .60	2) .70
3) Background alarms	3) < .01		3) .20	3) .35
4) Efficiency	4) 0.9		4) .85	4) .82
5) Rejection ratio	5) > 0.5		5) .08	5) .19

APG Blind Grid – Dynamic

Table 2b. Performance Under Dynamic Acquisition
(rolling cart).

Performance Criteria	Expected	Confirmation Method	GEM-5 (survey)	GEM-3 (2003 towed)
Response Stage		Government evaluation		
1) Probability of detection	1) > .95		1) .70	1) .30
2) Probability of false alarms	2) > .95		2) .75	2) .40
3) Background alarms	3) < .01		3) .30	3) 0.0
Discrimination Stage		Government evaluation		1) .20
1) Probability of detection	1) > 85%		1) .50	2) .30
2) Probability of false alarms	2) < .2 (< 20% clutter declared UXO)		2) .50	
3) Background alarms				3) 0.0
4) Efficiency	3) < .01		3) .15	4) .71
5) Rejection ratio	4) 0.9		4) .72	5) .22
	5) > 0.5		5) .29	

4.2 PERFORMANCE CRITERIA

The formal performance criteria for the scored assessment of the technology under demonstration are described in Table 3.

Table 3. Performance Criteria.

Performance Criteria	Description	Primary or Secondary
Probability of detection	# UXO detected / # UXO buried	Primary
False alarm rate	# anomalies not ordnance/m^2	
Reliability	Downtime	
Maintenance	Frequency, required training	
Ease of use	Operator productivity	
Factors affecting performance	Operating conditions affecting performance	
Versatility	Other potential applications	Secondary

Performance confirmation methods include quantitative calculations of Pd, Pf, and PBA. These require ground truth and must be computed by ATC. These may be recomputed as a function of threshold criteria for generation of ROC curves.

As defined in the ATC scoring record #694 for this demonstration, "The RESPONSE STAGE scoring evaluates the ability of the system to detect emplaced targets without regard to ability to discriminate ordnance from other anomalies. For the blind grid RESPONSE STAGE, the demonstrator provides the scoring committee with a target response from each and every grid square along with a noise level below which the target responses are deemed insufficient to warrant further investigation." Grid squares with a response stage below the stated noise threshold are declared empty (neither UXO nor metallic clutter present).

As defined in the ATC scoring record #694 for this demonstration, "The DISCRIMINATION STAGE evaluates the demonstrator's ability to correctly identify ordnance as such and to reject clutter. For the blind grid DISCRIMINATION STAGE, the demonstrator provides the scoring committee with the output of the algorithms applied in the discrimination-stage processing for each grid square. The values in this list are prioritized based on the demonstrator's determination that a grid square is likely to contain ordnance. Thus, higher output values are indicative of higher confidence that an ordnance item is present at a specified location." Geophex provided a confidence value threshold below which items are deemed likely clutter.

More extensive descriptions of these quantities as well as scoring records for this and other demonstrations are available in pdf formatted documents from the ATC web site.

Note that a high PFA for the response stage as a fraction (or %) of (metallic) clutter is desirable, because all metal targets (of sizes/depths comparable to UXO) are intended to be detected, and only in the discrimination stage classified as clutter.

4.3 DATA ASSESSMENT

The key point in the results shown in Table 2a and 2b is the dramatic reduction in detection rate of the GEM-3 as a result of dynamics during survey operation. The GEM-5 did not suffer a drop (in fact, it was slightly higher) from sensor survey-mode dynamics.

4.4 TECHNOLOGY COMPARISON

4.4.1 Motion Induced Noise

We performed extensive tests using the prototype coaxial coil EMI system and existing GEM-3 sensors. Figure 6 depicts a segment of the EM data at nine frequencies from 90 Hz to 21,690 Hz obtained from demo surveys at APG for both sensors. The data from x=0 to about x=250 were collected while the sensors stopped at the end of a survey line, i.e., static data, and the rest of the data were collected as the sensors were moving along a survey line, i.e., motion data. No targets exist along this segment, so the signal envelope represents the total. It is obvious that there is a significant difference between static and motion data for the GEM-3 sensor. For the coaxial sensor (designated GEM-5), it is very hard to tell when the sensor starts moving.

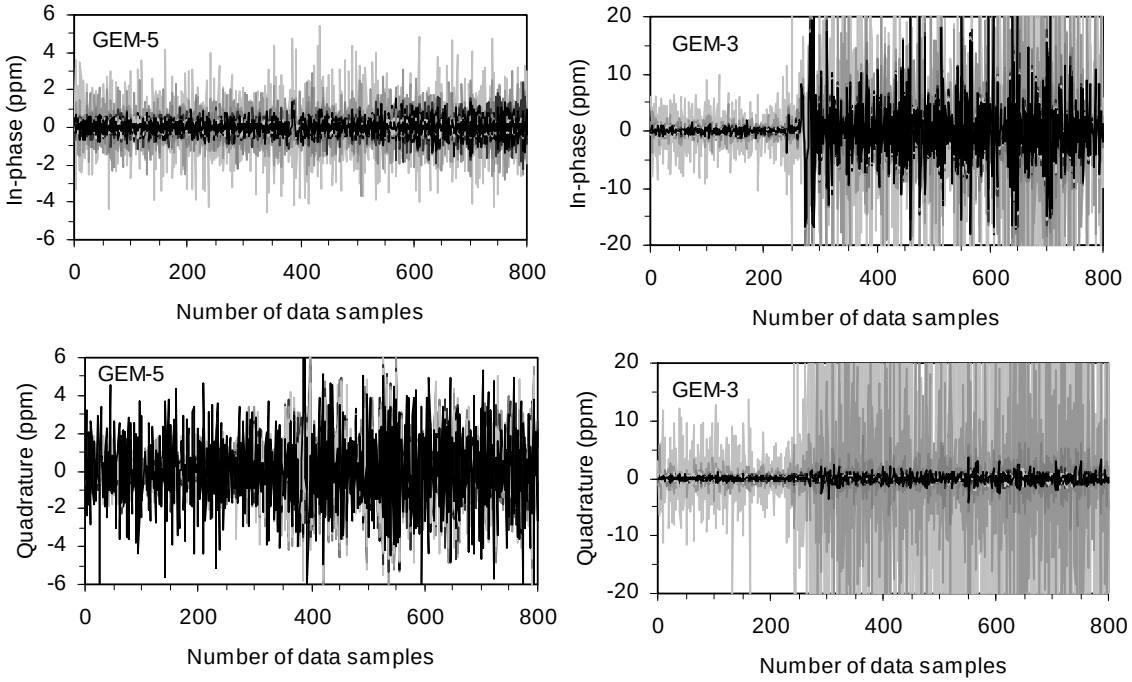

Figure 6. The Static (x=0250) and Motion (x>250) Noise Obtained Using both GEM-5 and GEM-3 Confirms Coaxial-Coil Immunity.

To compare the SNR of the two sensors, a closed-loop test coil (Q-coil) can be used, which is placed at the same distance from the sensors; then their responses serve as the signal. In Figure 7, we show spectral plots for the Q-coil response from 22 cm distance for the GEM-3 and GEM-5 (note, the frequencies for these are over a broader spectrum than those used for the SNR). The

standard deviations for the static noise and motion noise are used as a measure of noise. Then, the SNR for both sensors is calculated and illustrated in Figure 8.

Since the *ppm*-values cannot be directly compared for the two sensors, we define the motion-noise to static-noise ratio (MSR) as

$$MSR = 20 \times \log\left(\frac{N_M}{N_S}\right),$$

where N_M is the standard deviation of the motion-induced noise, and N_S is that of the static noise. As shown in Figure 8a, the MSR is much smaller for the GEM-5 (10 dB or less) than for the GEM-3 (20 dB).

For the static test, the SNR is higher for the GEM-3 than for the GEM-5 except at 90 Hz. For the motion test, the SNR of the GEM-5 is better than that of the GEM-3, especially at the low frequencies.

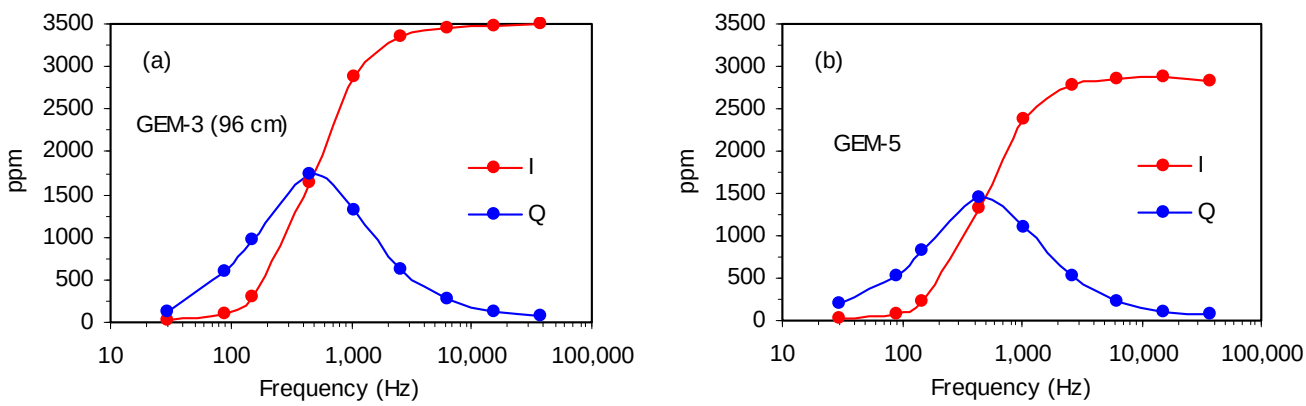

Figure 7. Q-Coil Spectral Responses for the GEM-3 and GEM-5 at 22 cm Vertical Distance from Bottom of Sensor
(shows consistent character but somewhat different scaling, which changes with distance corresponding to differing falloff functions).

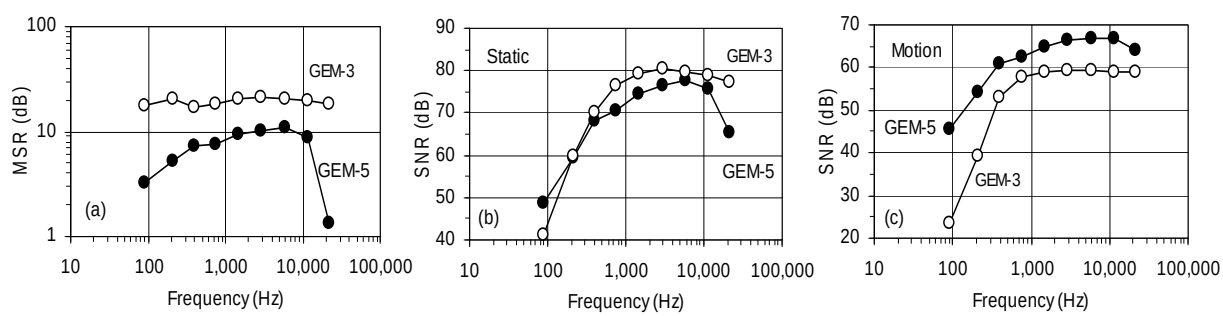

Figure 8. The MSR, the Static and the Motion SNR as a Function of Frequency for GEM-5 (solid circles) **and GEM-3** (open circles)**.**

4.4.2 Environmental Noise

Compared with the GEM-3, the GEM-5's balanced receiver bucking may largely cancel ambient EM noise such as power lines, radio transmitters, and industrial electrical machinery, as well as natural EM noise such as sferics. We carried out tests against a manmade EM noise at the operating frequencies of the GEM-5 and GEM-3. Figure 9 illustrates the typical data at seven frequencies from 390 Hz to 21,690 Hz for the two sensors. The noise source is off for the first half of the data sequence (x=0-450); it is on for the rest of the data series (x=450-900). As expected, the noise is almost cancelled out by the gradient measurements, but it significantly distorts the GEM-3 data.

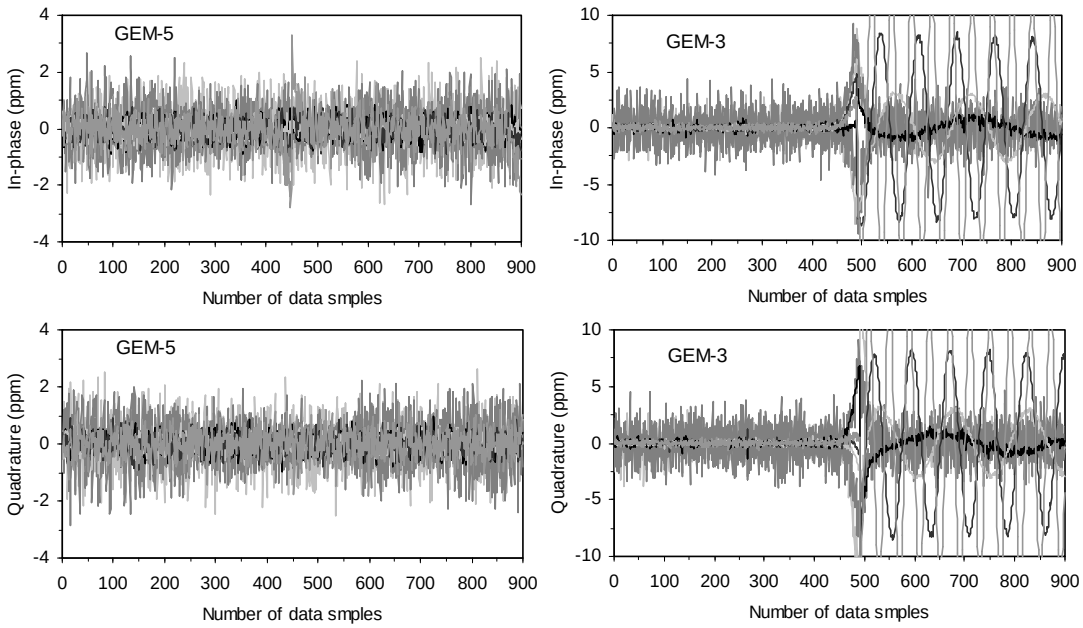

Figure 9. The EM Data Collected Using the GEM-5 and the GEM-3 When the Noise Source is Off (x=0450) and On (x > 450) Shows Coaxial-Coil Insensitivity.
(There are 7 frequencies ranged from 390 Hz to 21,690 Hz.)

4.4.3 UXO Detection

Both GEM-5 and GEM-3 were tested at the Standard UXO Technology Demonstration Site at APG, Maryland. The GEM-5 data were obtained in the calibration lanes and the blind test grid in 2005 using a wheeled, hand-pushed cart, while the GEM-3 data were obtained in the open area, including the calibration lanes and the blind test grid in 2003 using an ATV towed sled. The targets in the blind grid had been reseeded after 2003, so the results are not comparable for the two surveys, and the GEM-3 coverage included only half the calibration lanes. In Figure 10 we present the total *Q-Q* conductivity maps for GEM-3 and GEM-5. The data were collected at 10 frequencies from 90 Hz to 41 kHz. The circles indicate the seeded targets. Almost all seeded targets in this portion of the calibration lanes are detected by the GEM-5, while many of them are missed by GEM-3.

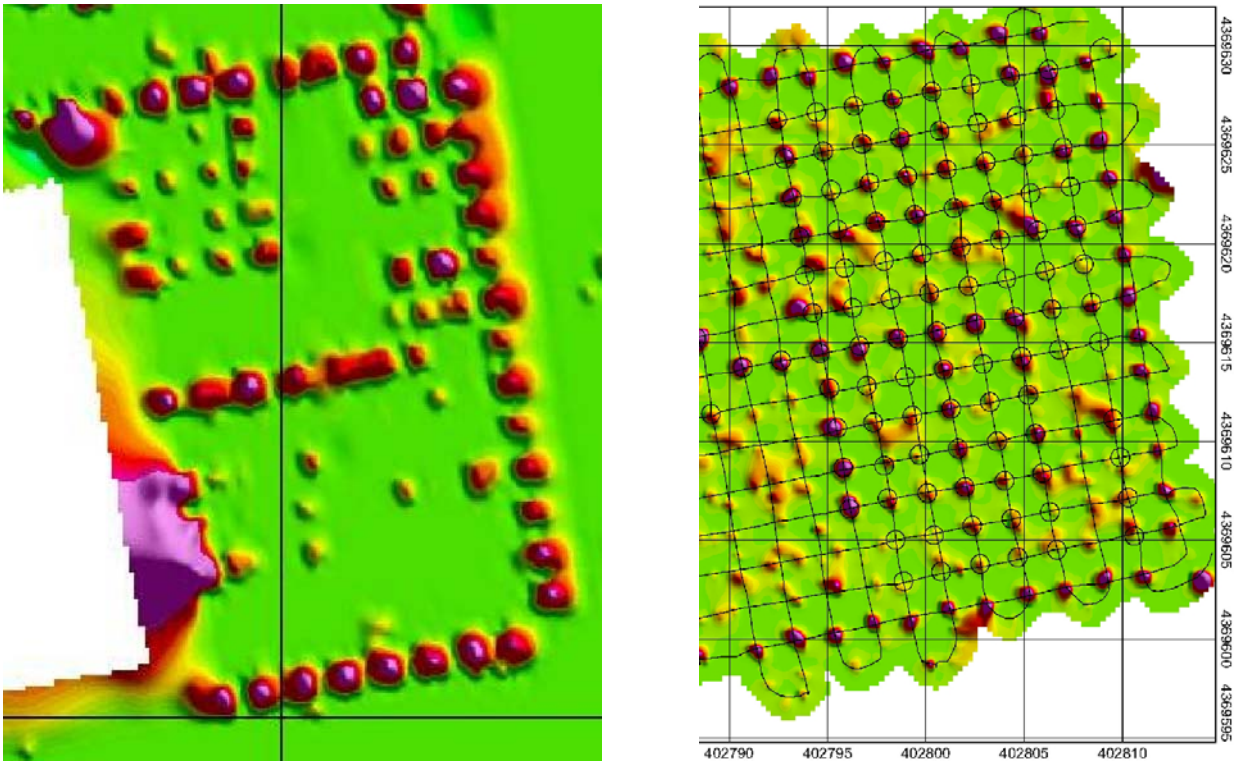

Figure 10. GEM-3 ATV Towed Apparent Conductivity (left) Compared to the Coaxial Coil Sensor (right) Apparent Conductivity Over Part of the Calibration Grid at the APG Demonstration Site Shows Improved Target Detection in a Dynamic Survey.

The advantages of the GEM-5 are more fully realized in a vehicle-towed array; subsequent to this demonstration, a GEM-5 array with seven receiver coil pairs has been demonstrated, and a score report will be published by ATC.

5.0 COST ASSESSMENT

5.1 COST REPORTING

Demonstration Costs:

Only the blind and calibration grids were surveyed, the blind grid in a static (nonproduction) mode as well as a dynamic mode for purposes of confirming the improved immunity to motion induced noise. Therefore, cost reporting for this demonstration can only approximate production survey cost. Costs were reported by ATC staff and documented in scoring record 694 and summarized here:

Initial setup time: 11.25 hours, performed by five persons

System calibration time (including in-air tests and calibration lane tests): 1.75 hours, performed by two persons.

Site survey (includes dynamic survey mode only): 4.25 hours, performed by 2 persons.

Demobilization: 0.83 hours, performed by five persons.

Note that another demonstration by Geophex was performed concurrently and occupied some time from the same personnel during initial setup and demobilization.

Only the blind and calibration grids were surveyed, the blind grid in a static (nonproduction) mode as well as a dynamic mode for purposes of confirming the improved immunity to motion induced noise. Therefore, cost analysis is subject to bias. As reported by ATC scoring record 694:

Supervisor @ $95/hr, data analyst @ $57/hr, and three support personnel @ 28/hr (setup and demobilization):

Initial setup cost: $2,712.25
Calibration cost: $266.00
Site survey cost: $646.00
Demobilization: $197.13

Total cost for dynamic survey: $3,821.38

Hypothetical Full-Scale Costs:

Table 4. Cost Report – Geophex, Ltd.

Cost Category	Subcategory	Cost ($)
Fixed Costs		
Capital Costs	Mobilization/demobilization	5,000.00
	Planning/preparation	2,000.00
	Site work	(brush clearing, etc.) 500.00
	Equipment cost (1 week rental for the following items: - Sensors - Platform - Navigation - Other	 0 0 0 0
	Startup and testing	200.00
		Subtotal - $7,700.00
Variable Costs		
Operational Survey Costs	Labor	10,000.00
	Materials and consumables	(batteries) 200.00
	Utilities and fuel	0
	Equipment rental (1 week)	1,500.00
	Performance testing/analysis - data processing	 2,500.00
	Other direct costs	0
		Subtotal - $14,200.00
Other Technology Specific Costs		
		Subtotal - 0
Total Costs		
		Total technology cost: $21,900.00
		Quantity surveyed: 10 hectares
		Unit cost: $2,190/hectare

5.2 COST ANALYSIS

The above costs assumes one week of field work; actual field work time required depends on site conditions, site access, and weather.

The objective in terms of cost reduction is reduced FAR using the spectral matching target identification with improved signal/noise operating on a platform in survey mode (dynamic conditions). We also propose use of the evolved coaxial ATV towed array, which not only increases productivity but has deeper target detection from the increased transmitter size.

5.3 COST COMPARISON

Surveying with the single coaxial, cart-mounted sensor costs the same as comparable sensors (e.g., single large-diameter GEM-3, single-cart mounted EM-61). Cost benefits pertaining to

reduced FAR have not been proven for any of these technologies at APG to this authors knowledge.

Costs for surveying with a coaxial array would be similar to comparable vehicle-towed sensor arrays (e.g., multisensory towed array detection system [MTADS], GEM towed array detection system [GEMTADS]).

This page left blank intentionally.

6.0 IMPLEMENTATION ISSUES

6.1 COST OBSERVATIONS

The demonstration survey cost was inflated by the fact that we performed the static acquisition test in addition to the true survey-mode dynamic test. The static test entailed stopping at each grid point, increasing the survey time. The setup cost was inflated because we had to make special field alterations associated with the prototype. Also, we were conducting another demonstration simultaneously (hand-held GEM-3 in moguls) and labor during setup was split between the two operations.

6.2 PERFORMANCE OBSERVATIONS

As with our experience with other sensors, many targets in the calibration grid are at the deep end of the expected depth envelope and are difficult to detect. We assume that this holds true in the blind grid as well.

In terms of discrimination, we had more than 20 UXO items in our library from 20-mm to 155-mm rounds, ferrous and nonferrous, low- and high-aspect ratios; the wide variety of ordnance increases the likelihood that a clutter item will respond similarly to one of the ordnance items. Also, the depth of the ordnance items results in low signal/noise, compromising target characterization.

6.3 OTHER SIGNIFICANT OBSERVATIONS

None

6.4 LESSONS LEARNED

The coaxial technology is particularly advantageous in a wide-area survey mission in a vehicle-towed configuration where platform motion is an issue. Exploiting the potential for an array configuration holds the most promise for an operationally advantageous system. Geophex has built and demonstrated a prototype seven-sensor GEM-5 array (see Figure 11), designed for robotic land-mine detection at APG, including the blind grid and open area; a complete score report has been published by ATC. Performance, production rates, and costs will be the primary end-user issues; these may vary for different sites and mission objectives. Discrimination at a site such as APG remains an elusive goal.

Figure 11. GEM-5 Seven Sensor Array Acquiring Data.

6.5 END-USER ISSUES

NA

6.6 APPROACH TO REGULATORY COMPLIANCE AND ACCEPTANCE

NA

7.0 REFERENCES

ESTCP MM-0036 Final Report. 2004. Geophex Ltd., Handheld Broadband Electromagnetic UXO Sensor.

ESTCP MM-0036 Cost & Performance Report. 2004. Geophex Ltd., Handheld Broadband Electromagnetic UXO Sensor.

Norton, S.J. and I.J. Won. 2001. *Identification of buried unexploded ordnance from broadband electromagnetic induction data*, IEEE Trans. Geosci. Remote Sensing, Vol. 39, pp. 2253-2261.

Norton, S.J., I.J. Won, and E.R. Cespedes. 2001a. *Ordnance/Clutter discrimination based on target eigenvalue analysis*, Subsurface Sensing Tech. Appl., Vol. 2, pp. 285-298.

Norton, S.J., I.J. Won, and E.R. Cespedes. 2001b. *Spectral identification of buried unexploded ordnance from low-frequency electromagnetic data*, Subsurface Sensing Tech. Appl., Vol. 2, pp. 177-189.

Won I.J., D.A. Keiswetter, D.R. Hanson, E. Novikova, and T.M. Hall. 1997. *Gem-3: a monostatic broadband electromagnetic induction sensor*, Jour. Environmental and Engineering Geophysics, Vol. 2, Issue 1, pp 53-64.

This page left blank intentionally.

APPENDIX A

POINTS OF CONTACT

Point of Contact	Address	Phone/Fax/E-Mail	Role In Project
I.J. Won	Geophex, Ltd. 605 Mercury Street Raleigh, NC 27603	Phone: 919-839-8515 Fax: 919-839-8528 E-Mail: ijwon@geophex.com	President, Geophex, Ltd.
Bill SanFilipo	Geophex, Ltd. 605 Mercury Street Raleigh, NC 27603	Phone: 919-839-8515 Fax: 919-839-8528 E-Mail: sanfilipo@geophex.com	Principal Investigator
Dr. Jeffrey Marqusee	ESTCP	Phone: 703-396-2120 Fax: 703-696-2114 E-Mail: marqusj@acq.osd.mil	ESTCP Director
Dr. Anne Andrews	ESTCP	Phone: 703-696-3826 Fax: 703-696-2114 E-Mail: Anne.Andrews@osd.mil	ESTCP UXO Program Manager
Dr. George Robitaille	AEC	Phone: 410-612-6865 Fax: 410-612-6836 E-Mail: gerobita@aec2.apgea.army.mil	DoD Liaison Contact (2005)
Jeffrey Fairbanks	ESTCP	E-Mail: jef@hgl.com	Technical Consultant
Larry Overbay	ATC	E-Mail: Larry.overbay@atc.army.mil	APG Site Director (2005)
Anthony Buschur	HydroGeoLogic, Inc.	Phone: 703-736-4540 E-Mail: abuschur@hgl.com	SERDP/ESTCP Project Assistant

_____

Bill SanFilipo Date
(Principal Investigator)
Geophex, Ltd

APPENDIX B

ROC CURVES - DYNAMIC

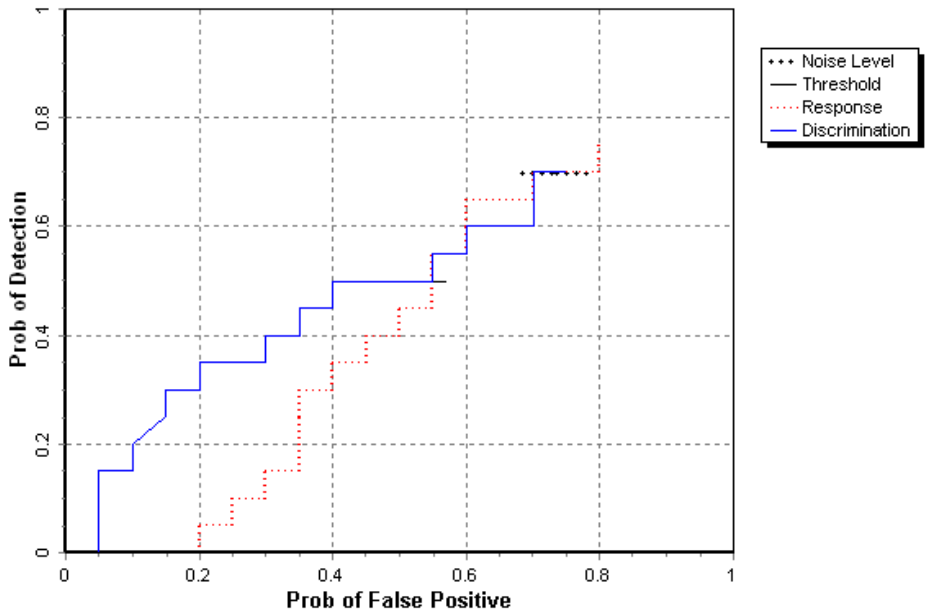

Figure B-1. GEM Five-Man Portable Dynamic Blind Grid Pd for Response and Discrimination Stages Versus Their Respective Pf over All Ordnance Categories Combined.

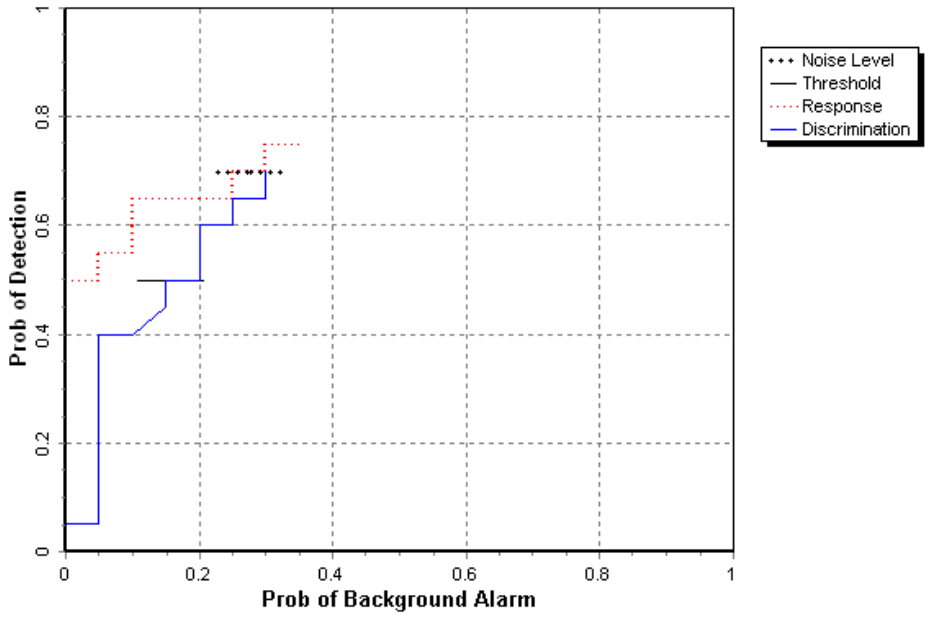

Figure B-2. GEM Five-Man Portable Dynamic Blind Grid Pd for Response and Discrimination Stages Versus Their Respective PBA over All Ordnance Categories Combined.

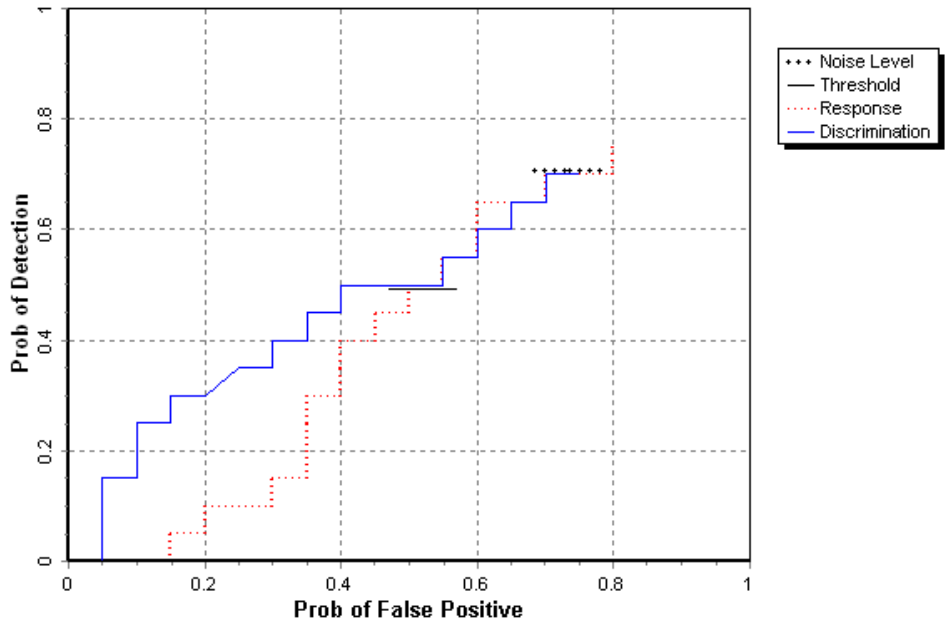

Figure B-3. GEM Five Man Portable Dynamic Blind Grid Pd for Response and Discrimination Stages Versus Their Respective Pf for All Ordnance Larger Than 20 mm.

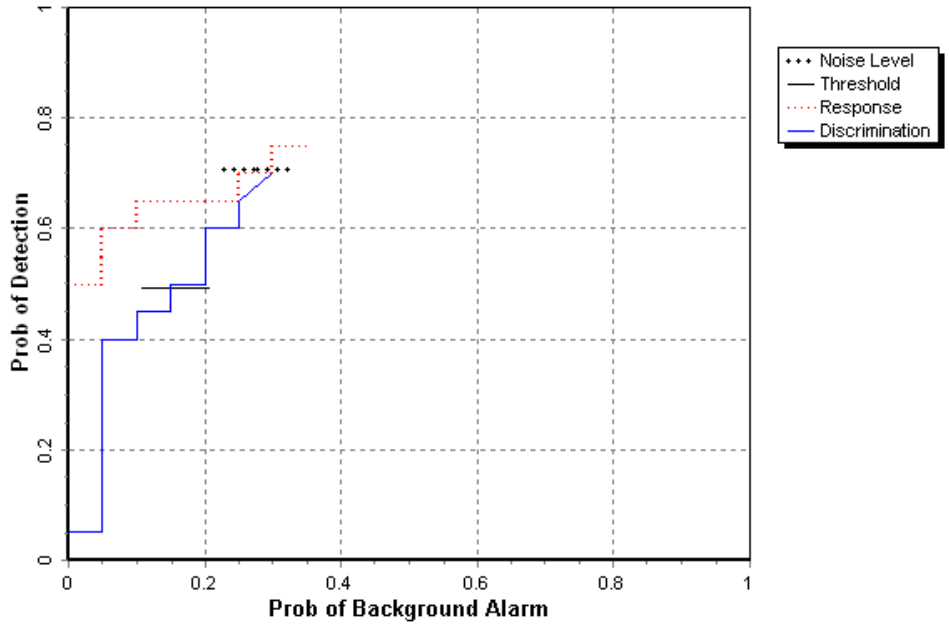

Figure B-4. GEM Five-Man Portable Dynamic Blind Grid Pd for Response and Discrimination Stages Versus Their Respective PBAs for All Ordnance Larger Than 20 mm.

ESTCP Program Office

901 North Stuart Street
Suite 303
Arlington, Virginia 22203

(703) 696-2117 (Phone)
(703) 696-2114 (Fax)

e-mail: estcp@estcp.org
www.estcp.org