ESTCP
Cost and Performance Report

(MM-0412)

Decontamination of Test Range Metal Debris using a Transportable Flashing Furnace

May 2006

ENVIRONMENTAL SECURITY
TECHNOLOGY CERTIFICATION PROGRAM

U.S. Department of Defense

COST & PERFORMANCE REPORT
ESTCP Project: MM-0412

TABLE OF CONTENTS

		Page
1.0	EXECUTIVE SUMMARY	1
	1.1 BACKGROUND	1
	1.2 OBJECTIVES OF THE DEMONSTRATION	1
	1.3 REGULATORY DRIVERS	1
	1.4 DEMONSTRATION RESULTS	2
	1.5 STAKEHOLDER/END-USER ISSUES	2
2.0	TECHNOLOGY DESCRIPTION	3
	2.1 TECHNOLOGY DEVELOPMENT AND APPLICATION	3
	2.2 PROCESS DESCRIPTION	4
	2.3 PREVIOUS TESTING OF THE TECHNOLOGY	5
	2.4 ADVANTAGES AND LIMITATIONS OF THE TECHNOLOGY	5
3.0	DEMONSTRATION DESIGN	7
	3.1 PERFORMANCE OBJECTIVES	7
	3.2 SELECTION OF TEST SITES	8
	3.3 TEST SITE/FACILITY HISTORY/CHARACTERISTICS	8
	3.4 PHYSICAL SETUP AND OPERATION	9
	3.4.1 Demonstration Setup and Start-Up	9
	3.4.2 Operational Durations	10
	3.5 ANALYTICAL PROCEDURES	10
	3.5.1 Phase 1 Procedures	10
	3.5.2 Phase 2 Procedures	11
	3.5.3 Phase 3 Procedures	12
4.0	PERFORMANCE ASSESSMENT	13
	4.1 PERFORMANCE DATA	13
	4.2 PERFORMANCE CRITERIA	13
	4.3 DATA ASSESSMENT	14
	4.3.1 Phase 1	14
	4.3.2 Phase 2	15
	4.3.3 Phase 3	16
	4.4 TECHNOLOGY COMPARISON	17
5.0	COST ASSESSMENT	19
	5.1 COST REPORTING	19
	5.2 COST ANALYSIS	20
	5.2.1 Cost Drivers	20
	5.2.2 Sensitivity Analysis	20
	5.3 COST COMPARISON	20
6.0	IMPLEMENTATION ISSUES	21
	6.1 COST OBSERVATIONS	21
	6.2 PERFORMANCE OBSERVATIONS	21

TABLE OF CONTENTS

Page

6.3 SCALE-UP 21
6.4 OTHER SIGNIFICANT OBSERVATIONS 21
6.5 LESSONS LEARNED 21
6.6 END-USER ISSUES 22
6.7 APPROACH TO REGULATORY COMPLIANCE AND ACCEPTANCE 22
7.0 REFERENCES 23

APPENDIX A POINTS OF CONTACT A-1

LIST OF FIGURES

Page

Figure 1. The U.S. Army Simple Flashing Furnace with a Rolling Hearth 3
Figure 2. Disassembled TFF Ready for Shipping. 4
Figure 3. TFF Elevation View 4
Figure 4. TFF Plan View 5
Figure 5. Map of Eglin Air Force Base. 9
Figure 6. Position A is Located by the Door and B by the Burners. 10
Figure 7. Initial Phase 1 Test Showing That The TFF Can Effectively Heat Scrap to 650°F and Hold It for 10 Min. 14
Figure 8. Basket CC1 Immediately Following a Test. 15

LIST OF TABLES

Page

Table 1. Performance Objectives 7
Table 2. Explosive Test Coupons Performance Data 13
Table 3. Expected Performance and Performance Confirmation Methods 13
Table 4. Bulk Load Density's Effect on the Heat-Up Time and Fuel Usage 15
Table 5. Phase 2 and Phase 3 Process Parameters 16
Table 6. Time for Each Load in Min 16
Table 7. EDE Initial Major Cost Estimate for Instrumented Versus Uninstrumented Load 17
Table 8. Cost Reporting 19

ACRONYMS AND ABBREVIATIONS

AFB	Air Force Base
BAE	British Aerospace Engineering
BRAC	base realignment and closure
CO	carbon monoxide
CO_2	carbon dioxide
CWP	contaminated waste processor
DoD	Department of Defense
EDE	El Dorado Engineering
EOD	explosive ordnance disposal
ESTCP	Environmental Security Technology Certification Program
FUDS	formerly used defense sites
HEI	high explosive incendiary
NO_x	oxides of nitrogen
OB/OD	open burning/open detonation
O_2	oxygen
RCRA	Resource Conservation and Recovery Act
SFW	special fused weapons
TC	thermocouple
TFF	transportable flashing furnace
TNT	2,4,6 - Trinitrotoluene
UXO	Unexploded Ordnance

ACKNOWLEDGEMENTS

El Dorado Engineering (EDE) wishes to acknowledge the following organizations:

- Environmental Security Technology Certification Program (ESTCP) – funding source
- Army Corps of Engineers
- Eglin Air Force Base
- British Aerospace Engineering (BAE) Systems

EDE wishes to acknowledge and thank the following individuals for their help and support throughout this demonstration:

- Anne Andrews (ESTCP)
- Scott Millhouse (Army Corps of Engineers)
- Ed O'Connell (Eglin Air Force Base)
- Mark Libby and John Cahill (BAE Systems)

This page intentionally left blank.

1.0 EXECUTIVE SUMMARY

1.1 BACKGROUND

The largest quantities of debris collected during the clearance of military test and open burning/open detonation (OB/OD) ranges are not live munitions but parts and pieces of munitions that may or may not have trace quantities of explosive contamination. The collected debris varies in size from very small to very large fragments and consists primarily of steel, with some brass and aluminum, and a small portion of other materials. In a typical range clearance operation, the debris is located, collected, and stored near the test range.

Decontamination to a 3X level can be obtained by cleaning and visual inspection; however, blind areas, joints, cracks, voids, etc. can harbor residual energetic materials. Transfer documents for decontaminated metals must attest to the inspection of the materials and certification that it bears no explosive material. Material at the 3X level that is decontaminated by thermal treatment is classified 5X and can be freely released to the public without restriction. To date, thermal decontamination ovens have been fixed installations and the cost of transporting and treating contaminated debris has been prohibitive, the debris has remained unprocessed and stored locally, often buried on-site.

For transportability purposes, El Dorado Engineering (EDE) has adapted well-established contaminated waste processing technology into a standard 48-foot trailer configuration. The transportable flashing furnace (TFF) technology can be easily deployed to the field for high-volume, repeatable, and certifiable 5X decontamination.

1.2 OBJECTIVES OF THE DEMONSTRATION

The primary objective of this demonstration study was to clearly demonstrate the TFF technology can support range cleanup operations efficiently and economically by optimizing decontamination, duration, and cost parameters. A variety of range scrap size and configurations were investigated. The demonstration concentrated on ammunition items that contained high explosive fillers and propellants and excluded such chemical fillers as pyrotechnics, flare/smoke compositions, lethal/nonlethal agents, depleted uranium, and similar items. For a complete list of objectives, reference the Final Report, Section 1.2.

1.3 REGULATORY DRIVERS

Specific regulations, directives, and accident-history considerations have created a critical need for this technology from a personnel safety and an environmental perspective. Regulatory drivers prohibit metal from being released to the public and eliminate open burning as a flashing operation. The drivers conveniently allow the TFF to be generated without obtaining special environmental permits. For a complete list of regulatory drivers, reference the Final Report, Section 1.3.

1.4 DEMONSTRATION RESULTS

This demonstration showed that range material can be effectively flashed in the TFF. Operating parameters were developed that maximized throughput and reduced operating costs. Of particular interest, explosive treated test coupons were processed with the range scrap. After thermal treatment, they were sent back to a laboratory and analyzed. Each coupon was completely clean from all explosives. This provides absolute confidence that when range scrap is flashed with the process parameters determined from this demonstration, it is correctly classified as 5X.

Appropriate operating parameters were determined that would maximize throughput. With these operating parameters, the TFF can process 15-17½ tons per day. Total cost of flashing this material ranges from $40.60 (10% aluminum) to $79.60 (100% steel) per ton, depending on the make-up of the range scrap.

1.5 STAKEHOLDER/END-USER ISSUES

All Department of Defense (DoD) installations involved with ammunition have a basic requirement for a method of decontaminating materials from a 3X to a 5X state. Results of this demonstration will provide end users with an understanding of the technical, logistical, and financial impact of applying the TFF technology to their decontamination requirements.

Current demilitarization practices at facilities operated by all four military services render the ordnance item incapable of functioning in its designed manner but may not necessarily rid the item of all explosive material. The need for a flashing furnace technology to remove all explosive materials is required.

Besides test ranges, the TFF has application in related programs associated with base realignment and closure (BRAC) and formerly used defense sites (FUDS) remediation activities. Not only can munition fragments and target debris be processed, but building materials and explosive processing equipment such as 2,4,6 - Trinitrotoluene (TNT) melt kettles can be decontaminated. The TFF operations at Ravenna were specifically targeted to the decommissioning of explosive manufacturing and melt/pour facilities. The use of TFF at Kaho'olawe was part of the largest FUDS remediation project accomplished by DoD to date.

In addition, the TFF has potential for a wide application in demilitarization programs. A TFF was recently delivered to Anniston Munitions Center for use in the demilitarization of rocket motors. The propellant and explosive items are removed from the rocket motors for recycling, and the metal parts are flashed prior to recycling metal. The TFF has application to flash large projectile and bomb bodies where the explosives are removed either by steam-out or microwave melt-out and sold to the mining explosive industries. One of the major benefits of the use of the TFF for demilitarization is that by providing a method of decontaminating munition metal parts, it allows for recycling of the energetic materials rather than disposal of the items to be demilled.

2.0 TECHNOLOGY DESCRIPTION

2.1 TECHNOLOGY DEVELOPMENT AND APPLICATION

Many U.S. Army depots and load lines possess quantities of 3X explosive contaminated scrap. In response to increasingly stringent environmental regulations in the late 1970s and early 1980s, the Army developed a small, simple flashing furnace (see Figure 1). This stationary unit employed a refractory car bottom that moved in and out of the furnace to facilitate loading and unloading. A typical application might include flashing 750-lb bomb bodies from washout or melt out operations. In order to sell the metal debris as scrap, the bomb bodies first had to be processed to a 5X level of decontamination.

Because of mounting public and environmental regulatory pressure, it was proposed that explosive contaminated combustible materials be added to the Army's flashing furnace feed stream. Many of these materials burned all day long in the open, generating thick, black smoke. Due to poor burn qualities, these materials often had to be re-burned. As a result, to process combustible explosive contaminated wastes, modifications such as greater combustion air input equipment, an unfired afterburner, and a complete pollution control system were added to the flashing furnace. A larger version of the furnace was also designed to provide greater throughput and a capacity to decontaminate 20-foot sections of pipe. This system became known as the contaminated waste processor (CWP).

The CWP was intended to provide flashing as well as combustible waste burning. All Army CWP installations were stationary. Upon a review of the system, El Dorado Engineering (EDE) ascertained that by eliminating the combustible waste processing capabilities, the flashing furnace technology could be made transportable. Such a system would be ideal for field deployed locations to service small or temporary needs that could not justify a larger, multirole, fixed installation.

Figure 1. The U.S. Army Simple Flashing Furnace with a Rolling Hearth
(shown here processing 750 lb bomb shells).

The system used for this demonstration is the TFF, designed by EDE.

2.2 PROCESS DESCRIPTION

The TFF was designed primarily to meet the following specifications:

- Transportability: complete system highway transportable within a 48-ft trailer
- Easy loading of large, heavy or awkward material: carbottom rollout
- Heat cycle time: 45 to 90 min, depending on load size and type
- Throughput: 2 tons/hr, typical
- Nominal internal dimension: 5-ft high x 7-ft wide x 17-ft long
- Burners: oil-fired dual burners with propane pilots; 6M BTU/hr capacity
- Cooling air input system for rapid cool down
- Unfired afterburner to minimize emissions
- Controls: main controls on trailer; pendant mounted controls for remote operation
- Field mounting: ability to be set up and taken down within one day.

Figure 2. Disassembled TFF Ready for Shipping.

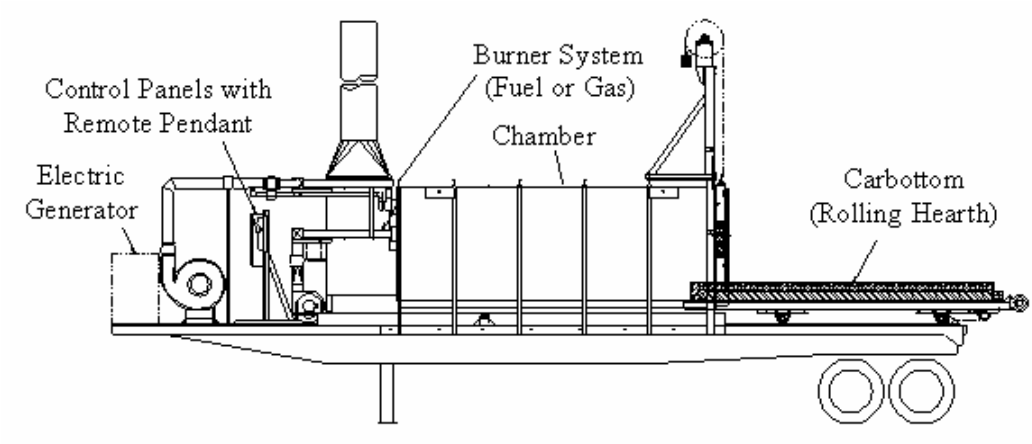

Figure 3. TFF Elevation View (fuel skid not shown).

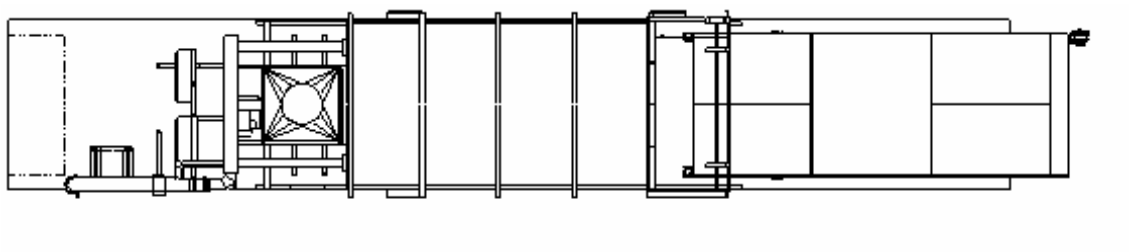

Figure 4. TFF Plan View (fuel skid not shown).

The TFF is designed for easy use. The car bottom is controlled by a pendant located on the side of the trailer. All other necessary controls and alarms are located on the control panel providing simple, inclusive control for one operator.

2.3 PREVIOUS TESTING OF THE TECHNOLOGY

EDE has designed, fabricated, and installed three TFFs for related, nontest range applications for Army, Navy, and Air Force installations:

1. The first TFF was installed at Ravenna Army Ammunition Plant. Under contract with the Army, MKM Engineering was dismantling explosives-contaminated equipment and facilities to support closure of a plant that had been used in munitions manufacturing operations. The EDE TFF was installed at Ravenna in the spring of 2000 and has been in operation since then. Due to the low emissions from the TFF, environmental regulators deemed the TFF's emissions as "insignificant" and did not require a Resource Conservation and Recovery Act (RCRA) permit or an air permit in the state of Ohio.

2. A second TFF was furnished to Eglin Air Force Base (AFB), Florida, for processing small arms ammunition. This unit used removable strongboxes (burn kettles) to process the explosive wastes that were loaded onto the car bottom furnace. Since this application was for actual ordnance classified as a hazardous waste rather than merely contaminated material, it was operated under the Eglin AFB Subpart X RCRA permit. It should be noted that only the strongboxes required permitting and not the TFF. The TFF was considered a heat source to the strongboxes and did not require its own permit to operate.

3. A third unit was provided to the contractor Parsons/UXB for use in the cleanup of Kaho'olawe, Hawaii. This application closely resembles active military test range operations as it involves final cleanup of a former Navy test range. This TFF system is accepted as a non-RCRA process without an air permit.

2.4 ADVANTAGES AND LIMITATIONS OF THE TECHNOLOGY

The EDE TFF offers the following significant advantages:

- Transportability
- Ease or lack of permits requirements
- Operational in remote, isolated, dispersed, or geographically difficult terrain

- Adaptable for supporting a wide variety of operations, including unexploded ordnance (UXO) cleanup.

It is extremely difficult to define a monetary cost benefit for using this technology as there is no technology currently being used for thermally decontaminating range scrap, and this material is being stored indefinitely. There has been some effort to shred or otherwise size-reduce these materials and perform visual inspections. These operations are considerably more costly than thermal treatment and still do not guarantee explosive-free materials.

There are documented cases of this type of 3X material causing fatalities and accidents by people handling materials they thought were inert while the materials were being transferred from military installations to recycling facilities. In addition, there is considerable environmental liability. All Department of Defense (DoD) agencies operating or closing test ranges now recognize the seriousness and magnitude of range contamination and material management. EDE was involved in a project at Nellis AFB where this material had been buried at five sites in the desert. Nellis AFB was required to perform a sweep for UXO in each area, remove all desert tortoises and then drill, place, and operate groundwater monitoring wells at each site. This risk only grows worse with time. Treating and removing contaminated debris will be a major reduction of risk and liability.

The other alternative is open burning/open detonation (OB/OD). While it might be argued that this is cheaper, it is clear that it is not environmentally sound or efficient. The military has already expressed its opinion regarding the elimination of all OB/OD technologies (see reference Section 1.3). Also, there is no way to tell if all material reaches 650°F and becomes completely decontaminated.

3.0 DEMONSTRATION DESIGN

3.1 PERFORMANCE OBJECTIVES

Table 1. Performance Objectives.

Type of Performance Objective	Primary Performance Criteria	Expected Performance Metric	Actual Performance Objective met
Test Phase 1			
Quantitative	Ability of TFF to 5X range scrap material	>650°F for 10 min	Yes
	Ability of TFF to handle wide variety of shapes and sizes	>650°F for 10 min	Yes
	Evaluate basket designs to optimize heat cycle by monitoring and comparing		
	Time required to heat loads to 650°F	40 min	Varies slightly for differing baskets and materials—CC1[1] 32 min
	Fuel usage	30 gal per 2,500 lb	Varies for differing baskets—CC1 average 22.4 gal per 2,500 lb
	Basket cost	$4,000	Varies for differing baskets—CC1 = $4,000 (basket), $2,000 (tray)
Quantitative	Basket structural integrity	Operator acceptance	Varies for different baskets—yes for CC1
	Basket molten material containment	Operator acceptance	Varies for different baskets—yes for CC1
Test Phase 2			
Qualitative	Labor requirements to maximize throughput	2 laborers (80 hr/wk) Skilled operator (40 hr/wk) Skilled forklift operator (40 hr/wk)	Same as expected

[1] Basket CC1 was the preferred basket design among those tested.

Table 1. Performance Objectives (continued).

Type of Performance Objective	Primary Performance Criteria	Expected Performance Metric	Actual Performance Objective Met
Quantitative	Fuel consumption per weight range scrap (gal/ton)	12	7.96
	Monitor heat-up time required for loads of various densities	Mean heat-up time (min): High-30 Medium-33 Low-36	High-24.3 Medium-29.3 Low-27.7
	Explosive coupon residue	100 % clean	100 % clean
Test Phase 3			
Quantitative	Fuel consumption per test	30 gal	28 gal
	Monitor cycle time required for TFF operations to develop realistic throughput operations		
	Instrumentation time	>5 min/TC (4 TC/load)	5 min/TC (4 TC/Load) 20 min/load
	Process times	80 min	65 min
	Total throughput	40,000 lb/day	30,000 – 35,000 lb/day

3.2 SELECTION OF TEST SITES

The demonstration was performed in conjunction with Air Force range management and British Aerospace Engineering (BAE) Systems at Eglin AFB. It was held on Field 5 as selected by Eglin range management. The TFF, currently located at Eglin AFB, was used to conduct the demonstration. Availability of an actual range with range scrap material, trained range staff, fully functional range infrastructure, and complete stakeholder and regulator buy-in all contributed to the selection of this ideal site for the TFF demonstration.

3.3 TEST SITE/FACILITY HISTORY/CHARACTERISTICS

Eglin AFB is a fully functional Air Force base with an active test range that creates potentially explosive contaminated range scrap. The range scrap operations at Eglin AFB are partially handled under contract by BAE Systems with disposal of live munitions performed by active UXO personnel assigned to the base. Other than siting the TFF, no special site preparation activities were required.

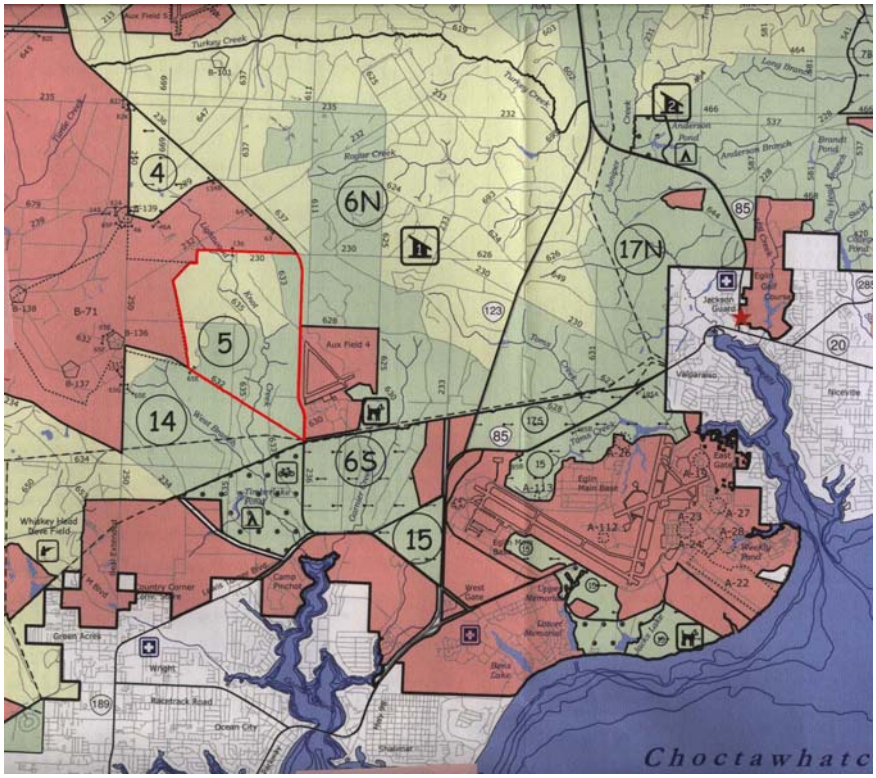

Figure 5. Map of Eglin Air Force Base.
(This demonstration was performed on Field 5.)

3.4 PHYSICAL SETUP AND OPERATION

3.4.1 Demonstration Setup and Start-Up

Prior to actual testing, the following tasks were completed:

- Designed and fabricated and/or purchased at least five different tray or basket configurations for holding the range scrap material
- Procured instrumentation to measure and record load temperatures inside the furnace during the operational cycle of the TFF
- Purchased miscellaneous equipment such as scales, fuel meter, and handheld combustion analyzer
- Developed the test procedures and evaluation plan for the program
- Recalibrated the data acquisition system
- Prepared explosive coupons (see Section 4.2 and Appendix A.1 for more information regarding these coupons).

The TFF had its own power generator so the only consumables required were number 2 fuel oil and propane. Approximately 15 tons of range scrap were thermally treated, not including the target debris, throughout this demonstration:

- Phase 1: 12,500 pounds of range waste consisting of a mix of high-density items, including 120 mm tank rounds, special fused weapon (SFW) rounds, and steel and brass cartridge cases.
- Phase 2: 15,000 pounds of material in each density group was used. Debris from the test range was separated by parameters such as size, shape, and material composition. The debris was then mixed into piles with three separate density groups: high, medium, and low (reference Section 4.3). In addition, two loads of "target debris," two one-ton tank turrets and one three-ton gun, were selected for testing.
- Phase 3: used previously processed range scrap.

3.4.2 Operational Durations

Dates and duration of each phase of the demonstration were as follows:

Phase 1: November 18-20, 2004; January 12-14, 2005
Phase 2: June 8-10, 2005
Phase 3: June 13-16, 2005.

3.5 ANALYTICAL PROCEDURES

3.5.1 Phase 1 Procedures

The procedural outline of Test Phase 1 was as follows:

1. Weigh empty basket.
2. Load baskets with 2,500 lb of range scrap and reweigh baskets.
3. Place four thermocouples (TC) in the locations specified in Section 4.3.1 of Final Report.
4. Basket/tray will be loaded onto the carbottom of the TFF at position A or B (see Figure 6).

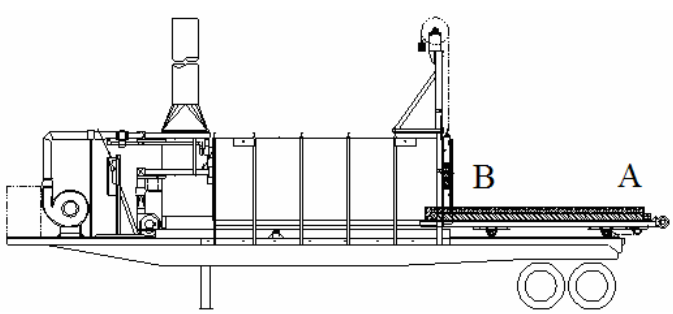

Figure 6. Position A is Located by the Door and B by the Burners.

5. Retract carbottom into the TFF and close the door.
6. Record fuel meter reading.
7. Start purge cycle.
8. Start burners.
9. Test stack emissions.
10. When each TC has reached 650°F, hold for 10 min.
11. With all four TCs at 650°F (minimum), batch is held for additional 10 min.

12. After 10-min soak time, turn both burners off and start the cooling fan.
13. Open the door when the ambient temperature of the furnace reaches 600°F.
14. Record fuel meter reading.
15. Remove heated load removed from TFF and load the next basket/tray of material on the carbottom.
16. Allow all loads to cool overnight.

The following information was recorded for each test:

- Basket identification type
- Basket location on carbottom
- Basket weights—empty, full, net weight of range scrap
- Time for each TC to reach 650°F
- Temperature of each TC at start of soak
- Temperature of each TC at the end of 10 min soak
- Temperature of each TC at time of door open
- Quantity of #2 fuel oil used
- Oxygen (O_2), carbon dioxide (CO_2), carbon monoxide (CO), and oxides of nitrogen (NO_x) emissions during testing
- An evaluation based on each basket's ability to maintain structural integrity, contain molten aluminum, and produce effective heat transfer.

All times and temperatures were monitored with the Eurotherm recorder. For complete Eurotherm test data, see Final Report, Appendix B.

3.5.2 Phase 2 Procedures

Phase 2 evaluated the effect of load bulk density on temperature profile for each heating cycle. Debris from the test range were collected and segregated into three separate density groups: high, medium, and low. Three loads were run of each density configuration.

Two baskets (2,500 pounds net scrap or max volumetric capacity of the baskets) were prepared of each density type. The same basic procedural outline was followed and the same information recorded with the following exceptions:

- Recording basket location and type was unnecessary, as baskets were placed in both the front and the rear of the carbottom.
- Basket CC1 was selected based on Phase 1 results and used for all subsequent testing.
- Rather than placing 4 TCs in each basket, 2 TCs were buried in the load in opposite corners of the baskets, and 1 was placed on the floor of the carbottom to correlate stack temperature with chamber temperature.
- Explosive treated coupons were placed in each basket. Upon completion of the flashing cycle, the coupons were sent to a lab and analyzed to verify that they were completely free from explosive material.

- The following labor times were recorded in addition to the items recorded in phase 1:
  - Time to place and remove TCs from baskets
  - Load and unload baskets on the carbottom.

3.5.3 Phase 3 Procedures

For Phase 3, the TFF was operated sufficiently to determine a worst case heat-up time. As no parameters were changed from Phase 2 to Phase 3, this was considered an extension of the previous phase. This phase provided the information necessary to determine accurate throughput rates, fuel consumption, and labor rates to establish cost and performance data for TFF operations.

4.0 PERFORMANCE ASSESSMENT

4.1 PERFORMANCE DATA

Table 2. Explosive Test Coupons Performance Data.

Decontamination of Range Material Using Transportable Flashing Furnace (El Dorado Engineering)	
Types of samples collected	Explosive-treated coupons
Sample frequency and protocol	5 coupons per 5,000 lb treated scrap
Quantity of material treated	50 304-SS washers
Untreated and treated contaminant concentrations	50 coupons per 25 tons untreated range scrap
Cleanup objectives	All 50 coupons explosive non-detect
Comparison with cleanup objectives	Cleanup objectives were all met
Method of analyses	EPA Test Method 8330

For complete information on Explosive Test Coupon results, reference Final Report, Sections 3.8, 4.2, 4.3.2, and Appendix A.1.

4.2 PERFORMANCE CRITERIA

Table 3. Expected Performance and Performance Confirmation Methods.

Performance Criteria	Expected Performance Metric (Pre-Demo)	Performance Confirmation Methods	Actual (Post-Demo)
Primary Criteria (Performance Objectives)			
Ability to 5X range scrap material	Yes	>650°F for 10 min	Yes
Ability to handle wide variety of shapes and sizes	Yes	>650°F for 10 min	Yes
Basket structural integrity	Yes	Operator acceptance	Yes for CC1
Basket can contain molten material	Yes	Operator acceptance	Yes for CC1
Labor requirements to maximize throughput	Determining an appropriate heat cycle and process times (labor rates can be estimated)	Total process times (min)	Total process time is 65 min; therefore, to maximize throughput, seven tests should be run a day. To accomplish this, two operators and two laborers are needed.
Explosive test coupons	Verify that the flashing cycle will eliminate all explosive material	Laboratory analysis of 50 test coupons.	Explosive non-detect on all test coupons
Stack emissions levels	Below de minimis levels	CO< 10 lb per day NO_x<10 lb per day	Averages at seven tests/day throughput rate: CO = 0.58 lb/day NO_x = 1.84 lb/day

4.3 DATA ASSESSMENT

This project demonstrated that range scrap and target debris can be thermally decontaminated to a 5X level in the TFF. Basket temperatures were monitored with TCs plugged into the Eurotherm data recorder. Complete test data is found in Appendix B of the Final Report. Obtaining the data was simple, and usable data was obtained for each test. For each load, the following parameters were recorded:

- Range scrap weight
- Heat time
- Cooling time
- Emissions data.

4.3.1 Phase 1

Phase 1 demonstrated that the material can be effectively flashed. An example of an early test run is found in Figure 7.

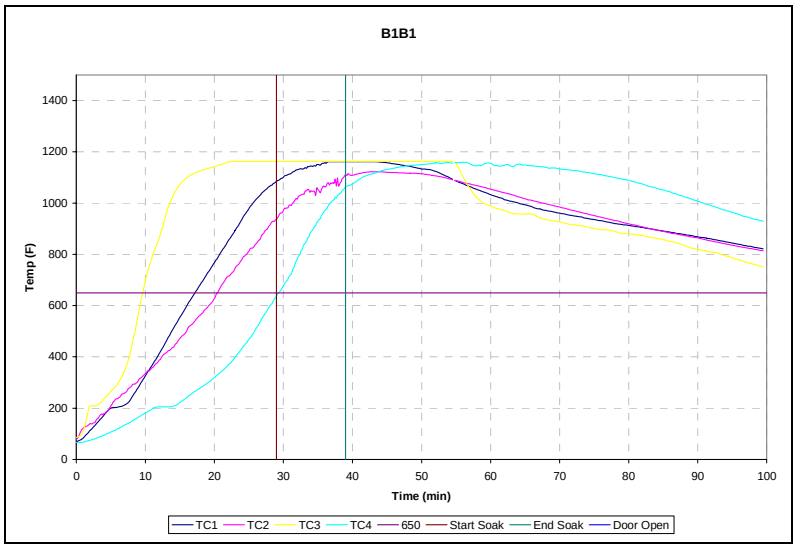

Figure 7. Initial Phase 1 Test Showing That The TFF Can Effectively Heat Scrap to 650°F and Hold It for 10 Min.

Note that the TCs heat to 650°F at varying rates due to their location inside the basket. The TCs located highest in the furnace heat faster than the ones closest to the floor. In addition, baskets closest to the burners heat faster than loads closest to the door. When the final TC reached 650°F, the heat-up time was complete (29 min for this test), and the 10-min heat soak was started. By the end of this heat soak, the material was already 1,100°F, almost double the required 650°F limit. Clearly, the TFF can effectively flash range material.

Another primary objective of Phase 1 was to evaluate different basket designs as they related to the flashing cycle. These baskets ranged from lightweight, commercially available, inexpensive,

semidisposable baskets to fabricated baskets built to withstand the thermal loads. Each basket was evaluated according to the following criteria:

- Ability to maintain structural integrity
- Molten aluminum containment
- Ease of heat transfer.

The commercially available baskets did not perform adequately. Basket CC1 (see Figure 8) was selected because it met all three criteria. It was found through testing that material placed higher in the chamber heated faster than material located near the floor. The basket is placed on a tray that elevates the range material to this optimum position. (Reference Final Report, Section 4.3.1 and Appendix A.2 for a complete discussion on basket selection.

Figure 8. Basket CC1 Immediately Following a Test.
(Note the molten material that has collected in the catch basin.
An aluminum ingot from a subsequent test is off to the right.)

4.3.2 Phase 2

Phase 2 results showed that load bulk density had no significant effects on the correlating heat-up time and fuel consumption (see Table 4).

Table 4. Bulk Load Density's Effect on the Heat-Up Time and Fuel Usage.

Densities	Mean Heat-Up Time (min)	Mean Fuel Usage (gal)
Low	24.3	17.3
Medium	29.3	22.0
High	27.7	20.3

Overall, 50 explosive treated coupons, five in each load, were processed during Phase 2 testing. Following thermal treatment, they were sent to DataChem Laboratory in Salt Lake City, Utah, where they were analyzed for any explosive residue. Results showed that all coupons were

completely free from explosive residue. These results are vital in that this is additional proof that the TFF can be used to effectively flash range scrap and provides additional confidence that the material is correctly classified as 5X.

4.3.3 Phase 3

Phase 3 was an extension of Phase 2 but with the primary objective of defining operating parameters that maximize throughput and overall cost. EDE had two hypotheses to ensure that the material was sufficiently flashed:

- Instrumenting each load
- Reliable worst-case heat-up time to eliminate the need for instrumentation.

Table 5. Phase 2 and Phase 3 Process Parameters.

	Instrument Labor Time (min)	Heat-Up Time (min)	Fuel Consumption (gal/ test)
Instrumentation	17.1	26.2	18.8
Uninstrumented	NA	38	28

Instrumentation times and costs were determined and compared to the reliable, uninstrumented heat-up time. The reliable fuel consumption was 28 gal. This corresponded to a cook time of 38 min and a process time of 65 min. As a small extra precaution, EDE recommends a reliable heat-up time of 40 min which corresponds to a fuel consumption of 29.5 gal per test. This corresponds to a process time of 65 min. Fuel consumption per time is equivalent to 27.3 gal per hr.

Estimated cost of instrumentation includes estimated maintenance costs (based on the number of TCs that failed during the demonstration and additional labor costs. The average instrumentation time per load (two TCs per basket, four per load) is approximately 17 min (see Table 6). The average time saved in cook time is approximately 12 min with an instrumented load.

Table 6. Time for Each Load in Min.

	Instrumented Load (Mean)	Uninstrumented Load
Load/unload time	10	8
Purge cycle	2	2
Cook time	26	40
Soak time	10	10
Cool	5	5
Instrumentation	17	NA
Total	70	65

Cost estimates in Table 7 are based on the estimated fuel cost of $2.20/gal.

Table 7. EDE Initial Major Cost Estimate for Instrumented Versus Uninstrumented Load.

	Cost Fuel	Instrumentation Maintenance	Labor Cost	Total Cost Comparison
Instrumented	$41.36	$29.17	$163.33	**$233.86**
Uninstrumented	$66.00	NA	$151.67	**$217.67**

EDE recommends not instrumenting loads because it is less expensive and will eliminate the problems associated with instrumentating each load. With an uninstrumented load, and with the appropriate operating parameters (see Final Report Section 2.3), EDE determined a maximum range scrap throughput of six to seven loads per day with seven loads being the norm. This corresponds to 6.5 to 7.6 hr of process time each day. Running five days a week, 50 weeks a year, it is possible to decontaminate from 3,750 to 4,375 tons of range scrap per year.

Based on all previous recommendations, the appropriate necessary manpower was determined. For maximization of throughput and operator safety, two operators should be used to operate the TFF. The TFF is designed for simple, easy use. The carbottom is controlled by a pendant located on the side of the trailer. All other necessary controls and alarms are located on the control panel, providing simple inclusive control for one operator. The other should be a skilled forklift operator, responsible for loading and unloading the carbottom.

For safety reasons, EDE has recommended that at least one of the operators be either explosive ordnance disposal (EOD) certified or a civilian UXO technician. The general purpose of the flashing furnace is to remove small quantities of explosive that are in crevices, cracks, etc. or to process small munitions components that were not expended. The design of the operation has been reviewed for the operator being safe for up to a 1-lb high-order detonation. However, having high-order detonation is not meant to be the routine practice of the furnace. Previous testing has shown that up to 20 mm high explosive incendiary (HEI) rounds can be processed in the furnace utilizing a strong box. Thus, if materials are highly suspected of containing live ammunition, a strong box should be utilized. The other materials should be screened to the point that the EOD or UXO technician can know that there would be no highly explosive charges greater than 1-lb that could be confined and able to detonate as a high order detonation.

Two additional laborers should be utilized to load the baskets with the scrap. They should also be responsible for preparing previous loads for removal from the site and ensuring that fuel levels are maintained properly.

For a complete discussion of all performance data assessment and results, refer to Final Report, Section 4.3.

4.4 TECHNOLOGY COMPARISON

It is nearly impossible to compare this technology as range scrap material is not currently being flashed but is stored indefinitely. There are documented cases of 3X material being sent from

military installations causing fatalities and accidents by people handling materials they thought were inert. In addition, there is considerable environmental liability. All DoD agencies operating or closing test ranges now recognize the seriousness and magnitude of range contamination and material management. Using the TFF, up to 4,375 tons of range scrap can be flashed per year.

5.0 COST ASSESSMENT

5.1 COST REPORTING

Table 8. Cost Reporting.

Cost Category	Subcategory	Costs ($)
Fixed Costs		
Capital costs	Mobilization/demobilization	$10,000
	Planning/preparation	N/A
	Site work	N/A
	Equipment cost	$440,000
	Start-up and testing	$2,000
	Subtotal	$452,000
Variable costs		
Operation and maintenance	Labor	$50.30 per ton
	Materials and consumables	N/A
	Utilities and fuel	$26.50 per ton
	Subtotal	$76.80 per ton
	Equipment cost	N/A See capital costs
	Performance testing and analysis	N/A
	TFF maintenance	$12.80 per ton
	Subtotal	$89.60 per ton
Other technology-specific costs	Scrap metal sale	Steel - $10 per ton Aluminum - $400 per ton
	Subtotal	100% steel - $10 per ton 90% steel, 10% aluminum - $49 per ton
	Total operating cost (100% steel)	$79.60 per ton
	Total operating cost (90% steel, 10% aluminum)	$40.60 per ton

It is noted that the total cost is reduced significantly for loads with a make-up of 10% aluminum. Most range scrap is made up primarily of steel. For accurate cost estimates, ranges need to determine what their scrap make-up is. At places such as Eglin AFB, there are numerous stockpiles of tank rounds made up of significant amounts of aluminum. Therefore, their total overall cost will be less than the $79.60 per ton cost for all steel. It is noted that this cost estimate deals with current costs and does not include inflation or other changing future costs.

Total fixed costs are approximately $450,000. This includes the price of the TFF, baskets, shipping, and other minor costs. Assuming a life-cycle of 20 years, the life-cycle cost is $22,600 annually. Amortizing this cost over its life cycle, the capital equipment cost is $5.14 per ton. Running the furnace at maximum throughput (4,375 tons per year), annual variable costs will be between $190,000 and $360,000, depending on the make-up of the scrap material. Total life-cycle costs will be between $4 million and $8 million. In that time 88,000 tons of scrap can be processed for a total life-cycle cost of $46.60 to $85.60 per ton.

The uncertainty of the cost estimate is +/- 20%. This estimate assumes the price of fuel is $2.20 per gal and the prices of scrap metal are $10 per ton for steel and $0.20 per lb for aluminum.

Changes in costs will affect the overall technology cost (Reference Section 5.2.2 for sensitivity analysis).

5.2 COST ANALYSIS

5.2.1 Cost Drivers

The major cost drivers include the following:

- Labor
- Fuel
- Scrap metal prices

5.2.2 Sensitivity Analysis

Realistic sensitivity analyses reveal the following sensitivity of total costs to major cost drivers:

- If the labor cost increases 20%, the labor cost per ton will increase $10 per ton of scrap processed.
- If the fuel cost increases to $3 per gal, the total fuel cost will increase $10 per ton of scrap processed.
- If scrap steel increases in value to $20 per ton, the overall cost will decrease $10 per ton of range scrap processed.

5.3 COST COMPARISON

It is noted that it is extremely difficult to define a monetary cost benefit for using this technology as currently there is no technology being used for thermally decontaminating range scrap, and this material is being stored indefinitely. There has been some effort to shred or otherwise size-reduce these materials and perform visual inspections. These operations are considerably more costly than thermal treatment and still do not guarantee explosive-free materials.

6.0 IMPLEMENTATION ISSUES

6.1 COST OBSERVATIONS

The key factors that affected project cost are primarily labor and fuel. It is noted that by selling the decontaminated material to salvagers significantly reduces cost, particularly loads with a lot of aluminum. It can be predicted that labor costs will decrease some over time but not by much. The primary process time driver is the heat time of the material inside the furnace, and, as this is fixed, labor will not be changed much.

One potential area for reducing costs in future applications will be the reduction of set up and take-down time. The TFF can be taken down and set up in less than a day. As this time is reduced, production will increase.

6.2 PERFORMANCE OBSERVATIONS

The demonstration performance met all of its objectives. The TFF can be successfully used to decontaminate range material to 5X level. An effective basket was developed which allows effective heat transfer, maintains its structure, and contains any molten material created during the heat cycle. The emissions throughout testing were below de minimis requirements; therefore, permitting the TFF should not be a significant issue.

It was determined that having a set, reliable heat time would be more cost efficient and reduce overall process time than instrumenting each load. Process times were monitored and throughput rates were determined from these times. The TFF can process range scrap as low as $45 per ton for loads that have a make-up of 90% steel and 10% aluminum. Costs for 100% steel loads are $85 per ton.

6.3 SCALE-UP

Scale-up issues are not an issue for the TFF.

6.4 OTHER SIGNIFICANT OBSERVATIONS

No other major factors will affect implementation of the technology. The technology is straightforward. Applying this technology will reduce the severe safety hazards of handling 3X material and the environmental hazards of storing this contaminated material. El Dorado Engineering, Inc. would be happy to assist anyone for help in contracting the technology (see Appendix A for specific contact information).

6.5 LESSONS LEARNED

The TFF can effectively decontaminate range material to 5X level. This demonstration developed the appropriate operating parameters (see Section 3.6.5 of Final Report) that would maximize throughput and reduce overall cost. During this demonstration, a reliable heat-up time was determined that ensures that all explosive residues are eliminated and instrumentation is not

needed. Operating at maximum throughput, the TFF is capable of flashing up to 4,375 tons of range scrap per year for $45 to $85 per ton depending on the make-up of the scrap material.

6.6 END-USER ISSUES

Communication and coordination with the Environmental Security Technology Certification Program (ESTCP), Eglin AFB, and BAE Systems was necessary throughout the demonstration. On June 16, 2005, EDE successfully demonstrated the technology to ESTCP personnel, potential clients, and Eglin AFB management at the demonstration site.

6.7 APPROACH TO REGULATORY COMPLIANCE AND ACCEPTANCE

The range scrap to be thermally decontaminated to a 5X level in the TFF is not considered to be either a waste or to be hazardous; therefore, RCRA regulations are not applicable. The range scrap is being decontaminated for safety reasons prior to being sent off site to be recycled and is therefore not considered to be a waste. The range scrap has the potential to be contaminated with trace quantities of explosives. It is important to note that, although explosives are listed as a D003 waste due to the characteristic of reactivity, the range scrap itself does not exhibit the D003 characteristic and therefore it is not classified as hazardous by RCRA. The TFF does not require any RCRA permits to operate.

The TFF is used to thermally decontaminate metal debris by heating it up to 650°F and holding at that temperature for at least 10 min. The typical load is almost all metal and contains virtually no combustible material. The TFF therefore does not generate any appreciable quantities of combustion products. If there are low quantities of potential combustible residues such as motor oils or grease on scrap vehicle parts, the cooling air fan on the TFF can be started during the heating process. This will ensure that adequate combustion air is available for complete combustion and will minimize the potential formation of CO. Typically, the only potential permit required to operate the TFF is an air permit. Therefore, contact with the local Bureau of Air Quality is necessary. Time to receive this permit should not be significant because the potential emissions are essentially only those from the burning fuel and are so low that the TFF is under the de minimis levels and its emissions are considered or classified as “insignificant.”

7.0 REFERENCES

1. Army Regulation 385-64, "Explosives Safety Program," and DA Pamphlet 385-64, "Ammunition and Safety Standards."

2. AFMAN 91-201, "Explosive Safety Standards."

3. Department of Army Technical Bulletin (TB) 700-4. "Decontamination of Facilities and Equipment." October 31, 1978.

4. DoD Directive 5160.65, "XXX Manager for Conventional Ammunition," November 17, 1981.

5. DoD Manual 5160.65M, "Implementing Joint Conventional Ammunition Policies and Procedures," Chapter 13, Paragraph F, "Demilitarization and Disposal – Developing Technical Procedures and Instructions." April 1989.

6. DoD 4160.21-M and DoD 4160.21-M-1, "Defense Demilitarization Manual." October 22, 1981.

7. DoD 6055.9 – STD. "DoD Ammunition and Explosives Safety Standards." July 1999.

8. El Dorado Engineering, Inc. 2005. Decontamination of Test Range Metal Debris Using a Transportable Flashing Furnace. ESTCP Project Number UX-2004-12. August 2005.

9. Executive Order 12088, "Federal Compliance with Pollution Control Standards."

10. Parsons-UXB Joint Venture, 2003. Phase II Report on Process Verification and Quality Control for the Kaho'olawe Car Bottom Thermal Processing Unit for Scrap Material Processing. February, 2003.

11. UXB International Inc. 2002. Report on Process Verification and Quality Control for the Kaho'olawe Car Bottom Thermal Processing Unit for Scrap Material Processing. October 2002.

12. UXB International Inc. 2002. Report on Process Verification and Quality Control for the Kaho'olawe Car Bottom Thermal Processing Unit for Scrap Material Processing. October 2002.

13. Ohio Air Quality Regulations. http://www.epa.state.oh.us/dapc/regs/3745-5/3745_15.html

14. Utah Air Quality Regulations. http://www.airquality.utah.gov/PERMITS/pmtinfo.htm

This page intentionally left blank.

APPENDIX A

POINTS OF CONTACT

Point of Contact	Organization	Phone/Fax/E-mail	Role In Project
Ralph W. Hayes	2964 West 4700 South Suite 109 Salt Lake City, Utah 84118	801-966-8288 801-966-8499 Eldorado50@aol.com	Principal Investigator
Jerry Clayson, PE	2964 West 4700 South Suite 109 Salt Lake City, Utah 84118	801-966-8288 801-966-8499 jerryclayson@aol.com	Lead Test Engineer
Chad Lasson	2964 West 4700 South Suite 109 Salt Lake City, Utah 84118	801-966-8288 801-966-8499 chad@eldoradoengineering.com	Assistant Test Engineer
Colin Heald	2964 West 4700 South Suite 109 Salt Lake City, Utah 84118	801-966-8288 801-966-8499 colin@eldoradoengineering.com	Field Engineer
Bryan Crist, PE	2964 West 4700 South Suite 109 Salt Lake City, Utah 84118	801-966-8288 801-966-8499 bryan@eldoradoengineering.com	Field Engineer
Glenn Johnson	2964 West 4700 South Suite 109 Salt Lake City, Utah 84118	801-966-8288 801-966-8499 glen@eldoradoengineering.com	Field Engineer
Stephen Hoggard	2964 West 4700 South Suite 109 Salt Lake City, Utah 84118	801-966-8288 801-966-8499 steve@eldoradoengineering.com	Assistant Test Engineer

ESTCP Program Office

901 North Stuart Street
Suite 303
Arlington, Virginia 22203

(703) 696-2117 (Phone)
(703) 696-2114 (Fax)

e-mail: estcp@estcp.org
www.estcp.org