ESTCP
Cost and Performance Report

(MR-201104 and MR-201157)

MR-201104: Evaluation of Discrimination Technologies and Classification Results

MR-201157: Demonstration of MetalMapper Static Data Acquisition and Data Analysis

September 2016

This document has been cleared for public release; Distribution Statement A

ENVIRONMENTAL SECURITY
TECHNOLOGY CERTIFICATION PROGRAM

U.S. Department of Defense

Page Intentionally Left Blank

This report was prepared under contract to the Department of Defense Environmental Security Technology Certification Program (ESTCP). The publication of this report does not indicate endorsement by the Department of Defense, nor should the contents be construed as reflecting the official policy or position of the Department of Defense. Reference herein to any specific commercial product, process, or service by trade name, trademark, manufacturer, or otherwise, does not necessarily constitute or imply its endorsement, recommendation, or favoring by the Department of Defense.

Page Intentionally Left Blank

COST & PERFORMANCE REPORT

Project: MR-201104 and MR-201157

TABLE OF CONTENTS

Page

EXECUTIVE SUMMARY 1
1.0 INTRODUCTION 1
1.1 BACKGROUND 1
1.2 OBJECTIVES OF THE DEMONSTRATIONS 2
2.0 TECHNOLOGY 3
2.1 METALMAPPER 3
2.2 TEMTADS 4
2.3 SENSOR ARRAY 6
2.4 ADVANTAGES AND LIMITATIONS OF THE TECHNOLOGY 7
2.4.1 Advantages 7
2.4.2 Limitations 7
3.0 PERFORMANCE OBJECTIVES 9
4.0 SITE DESCRIPTIONS 11
4.1 SITE SELECTION 11
4.2 GEOLOGY 11
4.3 MUNITIONS CONTAMINATION 12
4.4 SITE CONFIGURATION 12
5.0 TEST DESIGN 13
5.1 CONCEPTUAL EXPERIMENTAL DESIGN 13
5.2 SITE PREPARATION 14
5.2.1 Brush Cutting/Surface Clearance 14
5.2.2 Initial EM61-MK2 100% Coverage Survey 14
5.2.3 Seeding Operations 14
5.2.4 Instrument Verification Strips (IVSs) 14
5.3 SYSTEM SPECIFICATION 15
5.3.1 MetalMapper 15
5.3.2 TEMTADS 15
5.4 CALIBRATION ACTIVITIES 15
5.4.1 Test Pit and Instrument Verification Strip Data Collection 15
5.4.2 Background Data 16
5.5 DATA COLLECTION PROCEDURES 16
5.5.1 MetalMapper Data Collection 16
5.5.2 TEMTADS Data Collection 17
5.5.3 Scale of Demonstration 17

TABLE OF CONTENTS (Continued)

Page

5.5.4 Sample Density 17
5.5.5 Data Quality Checks 17
5.5.6 Data Handling 18
5.6 INTRUSIVE PROCEDURES 18
6.0 DATA ANALYSIS AND PRODUCTS 21
6.1 PREPROCESSING 21
6.1.1 MetalMapper Preprocessing 21
6.1.2 TEMTADS Preprocessing 21
6.2 PARAMETER ESTIMATION 21
6.3 TRAINING AND CLASSIFICATION 22
6.3.1 Confidence Metrics 22
6.3.2 Training Data 23
6.3.3 Target Classification 23
6.4 DIG LISTS 23
7.0 PERFORMANCE ASSESSMENT 25
7.1 EM61-MK2 DATA COLLECTION OBJECTIVES/REACQUISITION OBJECTIVES 25
7.2 CORRECTLY IDENTIFY SEED ITEMS IN THE INSTRUMENT VERIFICATION STRIP 25
7.3 CORRECTLY POSITION SENSOR RELATIVE TO THE SOURCE / CORRECTLY POSITION METALMAPPER RELATIVE TO EM61-MK2 TARGET 25
7.4 MAXIMIZE CORRECT CLASSIFICATION OF TOI 26
7.5 MAXIMIZE CORRECT CLASSIFICATION OF NON-TOI 26
7.6 CORRECTLY IDENTIFY TYPE OF TOI/CORRECTLY IDENTIFY TYPE OF NON-TOI 27
7.7 MINIMIZE NUMBER OF “CAN’T ANALYZE” TARGETS 27
7.8 CORRECT ESTIMATION OF TARGET PARAMETERS 27
8.0 COST ASSESSMENT 29
8.1 COST MODEL 29
8.2 COST DRIVERS 30
8.3 COST BENEFIT 30
9.0 IMPLEMENTATION ISSUES 31
9.1 IMPLEMENTATION ISSUES 31
9.2 LESSONS LEARNED 31
10.0 REFERENCES 33
APPENDIX A POINTS OF CONTACT A-1

LIST OF FIGURES

Page

Figure 2-1. DAQ and DAQ Functional Block Diagram 3
Figure 2-2. Antenna Array and Typical Deployment of the MetalMapper System 4
Figure 2-3. Construction Details of an Individual TEMTADS EMI Sensor 5
Figure 2-4. Individual Updated TEMTADS EMI Sensor with Three-Axis Receiver 6
Figure 2-5. Sketch of the EMI Sensor Array Showing the Position of the Four Sensors..... 6
Figure 2-6. TEMTADS Man-Portable 2x2 Cart Sensor Platform 7

LIST OF TABLES

Page

Table 3-1. Performance Objectives for this Demonstration Projects 9
Table 5-1. MetalMapper Acquisition Parameters 16
Table 5-2. TEMTADS Acquisition Parameters Used at Camp Beale 17
Table 7-1. Demonstration Results and TOI 26
Table 7-2. Demonstration Results and Non-TOI 26
Table 8-1. Details of Costs Tracked 29

ACRONYMS AND ABBREVIATIONS

AOL	Advanced Ordnance Locator
BTG	Black Tusk Geophysics
cm	centimeter(s)
DAQ	data acquisition computer
DQO	data quality objective
DTSC	California Department of Toxic Substances Control
EM61	EM61-MK2
EMI	electromagnetic induction
ESTCP	Environmental Security Technology Certification Program
GPS	Global Positioning System
Hz	hertz
ID	identification
IMU	inertial measurement unit
ISO	industry standard object
IVS	instrument verification strip
kHz	kilohertz
MEC	munitions and explosives of concern
mm	millimeter(s)
MMR	Massachusetts Military Reservation
MMRP	Military Munitions Response Project
MP	man-portable
MPV	man-portable vector
MR	Munitions Response
NStack	number of acquisition blocks
PMTMA	Pole Mountain Target and Maneuver Area
QC	quality control
RTK	real-time kinematic
SERDP	Strategic Environmental Research and Development Program
SOP	Standard Operating Procedure

TEMTADS	Time-domain Electromagnetic Multi-sensor Towed Array Detection System man-portable 2x2
TOI	target(s) of interest
Tx	TEMTADS transmit subsystem
USACE	U.S. Army Corps of Engineers
USB	universal serial bus
UTM	Universal Transverse Mercator
UXO	unexploded ordnance
WMA	Waikoloa Maneuver Area

Page Intentionally Left Blank

EXECUTIVE SUMMARY

This report describes in detail the procedures, methods, and resources Parsons used to complete demonstration projects at the Former Camp Beale, CA; Former Pole Mountain Target and Maneuver Area (PMTMA), WY; Fort Sill, OK; Massachusetts Military Reservation (MMR), MA; former Camp George West, CO; and former Waikoloa Maneuver Area (WMA), HI, for Environmental Security Technology Certification Program (ESTCP) Munitions Response (MR) projects MR-201104 (Evaluation and Discrimination Technologies and Classification Results) and ESTCP MR-201157 (Demonstration of MetalMapper Static Data Acquisition and Data Analysis).

OBJECTIVES OF THE DEMONSTRATION

To varying degrees, these projects were conducted with the following two primary objectives:

1. Test and validate detection and discrimination capabilities of currently available and emerging advanced electromagnetic induction (EMI) sensors developed specifically for discrimination on real sites under operational conditions.
2. Investigate in cooperation with regulators and program managers how classification technologies can be implemented in munitions and explosives of concern (MEC) cleanup operations.

TECHNOLOGY DESCRIPTION

Two advanced EMI sensors—the MetalMapper and the man-portable Time-domain Electromagnetic Multi-sensor Towed Array Detection System (TEMTADS) 2x2 (referred to here as TEMTADS), were tested as part of these projects. Both sensors employ multiple transmitters to induce electromagnetic fields in different orientations or locations relative to a given source object, and multiple receivers oriented in three directions (X, Y, and Z) to accurately measure the electromagnetic response generated by the source regardless of its orientation relative to the instrument. Both instruments also measure response over a significantly longer period than more traditional electromagnetic sensors. The MetalMapper uses three orthogonally-oriented transmitters to induce electromagnetic fields in the X, Y, and Z directions and seven triaxial receivers to measure the response generated by a source object following a pulse from each transmitter. The TEMTADS uses four horizontally-oriented (Z-direction) transmitters arranged in a 2x2 array, and four triaxial receivers—each situated in the middle of the transmitters—to accomplish the same task. Using the standard settings applied for each instrument over the course of these projects, the MetalMapper typically measured response to approximately 8 microseconds following each transmitter pulse, while the TEMTADS measured response to approximately 25 milliseconds versus the 1.25 milliseconds typically measured by the more standard EM61-MK2 (EM61) metal detector.

Data collected by the two instruments were processed using the UX-Analyze add-on to Geosoft's Oasis montaj processing environment to determine various parameters for each target. The primary parameters of concern were the intrinsic polarizability (response over time) of each axis of the source object. Because the polarizabilities essentially do not change between different versions of the same object, the polarizabilities measured for an unknown source object at a

field site can be compared to polarizabilities measured for standard objects such as ordnance. UX-Analyze was also used to determine the degree of match between field data points and site-specific libraries containing known polarizabilities for various versions of the ordnance suspected to be present at each site. Following library matching, each target was classified as either a target of interest (TOI) or non-TOI using a classification scheme developed for each site. A ranked dig list was submitted to ESTCP for each site, with the targets most likely to be TOI at the top and the targets most likely to be considered clutter at the bottom.

DEMONSTRATION RESULTS

The standard military MR work conducted (i.e., seeding, dynamic data collection, intrusive work) on the projects proceeded without issue. There was little of note with these activities with the exception of minor changes to the intrusive procedures as the projects progressed, to streamline the process and to ensure that results were tracked accurately. The projects were also largely very successful with regard to the advanced EMI sensor data collection and classification efforts. Dig lists successfully identified 98%–100% of the TOI at each of the sites, with the exceptions of MMR, where the TOI detection rate was as low as 83% during the second phase of intrusive investigation, and the former WMA, where it was concluded that all detection survey targets would need to be excavated to remove all hazardous material. The goal of the project at MMR was more to reduce the amount of large TOI at the site than to identify all TOI present, so the misclassification of some TOI was not a significant concern. Classification using the MetalMapper at the former WMA was determined to be ineffective, primarily due to the excessive geologic response from the iron rich volcanic environment. Reductions in clutter digs ranged from about 61% at Fort Sill to about 91% for the second project at Camp Beale, with the exception of the former WMA MetalMapper classification study, where it was determined that no reduction was possible.

IMPLEMENTATION ISSUES

The single largest implementation issue on any of the projects was the failure of one of the MetalMapper transmitters during the second Camp Beale project. Diagnosis and repair of this issue required about 130 hours of field time for trouble-shooting and standby time at the beginning of the project. A transmitter board also needed to be replaced during the Fort Sill project, although diagnosis and repair of the problem did not take nearly as long as the additional time needed at Camp Beale. Additionally, the serial-to-universal serial bus (USB) converter that was originally shipped with the MetalMapper caused repeated software crashes during both the first Camp Beale project and the Fort Sill project. Each crash necessitated a restart of the collection software and re-addition of the points to be collected, which severely impacted the number of points that could be collected each day. Improved versions of this equipment were identified, and the problem has been solved. The largest implementation issue with the TEMTADS was a re-shot rate nearing 25%. The TEMTADS survey area at Camp Beale was tree-covered and much rockier than the MetalMapper survey area, and it is suspected that many of the TEMTADS targets were selected based on geophysical noise in the low-amplitude EM61 data.

1.0 INTRODUCTION

Currently, up to 90% of excavation costs on most unexploded ordnance (UXO)/munitions and explosives of concern (MEC) projects are related to removing scrap metal that does not represent an explosive hazard. Significant cost savings could be achieved through the use of geophysical discrimination methods that could reduce the number of excavations required to remove explosive hazards from sites. Over the past six years, the Environmental Security Technology Certification Program (ESTCP) has been conducting discrimination studies at active and Formerly Used Defense Sites (FUDS) across the country to demonstrate the effectiveness of advanced electromagnetic induction (EMI) sensors in classifying subsurface metal as either a target of interest (TOI) potentially representing MEC that should be intrusively investigated, or as clutter that could be left in the ground without further investigation. To achieve these objectives, controlled tests were conducted at the Former Camp Beale, CA; Former Pole Mountain Target and Maneuver Area (PMTMA), WY; Fort Sill, OK; Massachusetts Military Reservation (MMR), MA; former Camp George West, CO; and former Waikoloa Maneuver Area (WMA), HI, as part of ESTCP Munitions Response (MR) projects MR-201104 (Evaluation and Discrimination Technologies and Classification Results) and ESTCP MR-201157 (Demonstration of MetalMapper Static Data Acquisition and Data Analysis).

All of these projects involved: the seeding of project sites with inert ordnance or industry standard objects (ISOs) intended to simulate the geophysical characteristics of MEC, the use or collection of EM61-MK2 (EM61) detection survey data to identify geophysical anomalies, the collection of cued advanced sensor data over the detection survey anomalies, analysis of the advanced sensor data, and the intrusive investigation of the anomalies. Parsons was responsible for at least one of these activities at each of the sites.

1.1 BACKGROUND

The Fiscal Year 2006 defense appropriation contained funding for the “Development of Advanced, Sophisticated Discrimination Technologies for UXO Cleanup.” ESTCP responded by conducting a UXO discrimination study at the former Camp Sibert, AL. The results of this first demonstration were very encouraging, in that conditions for discrimination were favorable at this site and included a single TOI (4.2-inch mortar) and benign topography and geology. All of the demonstrated classification approaches correctly identified a sizable fraction of the anomalies as arising from nonhazardous items that could be safely left in the ground. Both commercial and advanced sensors produced very good results. ESTCP organized demonstrations at MR sites across the country between 2006 and 2015, generally with new variables added to the classification challenges at each subsequent site (e.g., increased target density, increased response from local geology, mixed munition sizes ranging from small to very large, wooded areas). Additionally, the subsequent projects included the use of smaller, man-portable EMI sensors such as the Naval Research Laboratory’s Time-domain Electromagnetic Multi-sensor Towed Array Detection System (TEMTADS) man-portable 2x2 cart (TEMTADS), Lawrence Berkeley National Laboratory’s man-portable Berkeley UXO discriminator, and Black Tusk Geophysics’ (BTG) man-portable vector (MPV) machine. All of the EMI sensors tested to date have been successful in discriminating between TOI and clutter.

The earlier demonstration projects—many of which are discussed in this report—focused on proving that the technology was effective by comparing theoretical dig lists to real-world sources by excavating all of the targets at a given site and comparing the known source results to the predicted source results. More recent projects have focused on actually leaving metal classified as non-TOI in the ground following the completion of the project. The second ESTCP-funded project at the former Camp Beale—also discussed in this report—and a non-ESTCP-related removal action performed at two sites at the former Camp Sibert resulted in >7,000 dynamic target sources remaining un-dug at both sites, with regulatory approval. No TOI were misclassified at either site, and before the addition of quality assurance verification digs, the reduction in necessary clutter digs was >90% for each.

1.2 OBJECTIVES OF THE DEMONSTRATIONS

The overall objective of most of these projects was to demonstrate the ability of advanced EMI sensors and associated analysis software to separate subsurface sources likely to be TOI, from those possibly representing MEC from sources more likely to be metallic clutter that did not pose an explosive hazard. Other activities performed during these projects, such as the seeding, detection data collection, and intrusive investigation, were generally performed in support of the overall objective, with performance objectives for those portions of the projects governed by Standard Operating Procedures (SOPs) previously developed on numerous Military Munitions Response Projects (MMRPs). The one exception was the SOPs for the intrusive investigations, which were updated through the course of the demonstration projects, as feedback from the intrusive teams regarding the process flow and ESTCP regarding the usability of the results were incorporated into the procedures.

In addition to validating the performance of the advanced EMI sensors, the second Camp Beale demonstration project (the Camp Beale Pilot Study) was intended to serve as a vehicle for the U.S. Army Corps of Engineers (USACE) to determine the most effective way to contract a project that used a classification approach in a commercial setting as opposed to the demonstration setting used for all prior ESTCP projects. The project also allowed USACE to coordinate this type of project with a local regulator—in this case the California Department of Toxic Substances Control (DTSC)—throughout the process. Through the Technical Project Planning process, concurrence from the DTSC was obtained on all decisions made for each phase of the project.

2.0 TECHNOLOGY

2.1 METALMAPPER

The MetalMapper is an advanced EMI system developed by Geometrics, Inc., with support from ESTCP. The MetalMapper draws elements of its design from advanced systems currently being developed by G&G Sciences Inc. (supported by Naval Sea Systems Command, the Strategic Environmental Research and Development Program [SERDP], and ESTCP) and by Lawrence Berkeley National Laboratory (also supported by SERDP and ESTCP). It has three mutually orthogonal transmit loops in the Z, Y, and X directions and contains seven triaxial receiver antennas inside the Z (bottom) loop. Typically, the transmit loops are driven with a classical bipolar pulse-type time domain electromagnetic waveform (i.e., alternating pulse polarity with a 50% duty-cycle). Depending on the survey mode (e.g., static/dynamic), the fundamental frequency of transmission can be varied over the range $1.11 \leq f \leq 810$ hertz (Hz). The seven receiver antennas allow 21 independent measurements of the transient secondary magnetic field.

The data acquisition computer (DAQ) is built around a commercially available product from National Instruments. The National Instruments DAQ is a full-featured personal computer running the Windows 7 operating system. The DAQ, electromagnetic transmitter, and batteries for the system are packaged in an aluminum case that can be mounted on a pack frame, on a separate cart such as a hand truck, or on a survey vehicle such as a tractor. The instrumentation package also includes two external modules that provide real-time kinematic (RTK) Global Positioning System (GPS) location and platform attitude (i.e., magnetic heading, pitch, and roll) data. These modules are connected to the DAQ through serial RS232C ports. A block diagram of the DAQ system is shown in Figure 2-1.

A) MM DAQ assembly with Panasonic terminal.

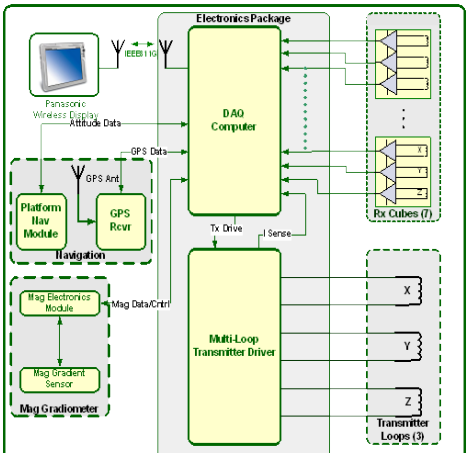

B) Function block diagram of MM system

Figure 2-1. DAQ and DAQ Functional Block Diagram

The MetalMapper has two modes of data collection: dynamic and static. Data collected in dynamic mode results in data files containing many data samples. Generally speaking, dynamic mode data are collected while the antenna platform is in motion. Static mode data collection is employed for cued surveys. As its name implies, the antenna platform remains static or motionless during the

period of data acquisition. Depending on the acquisition parameters (e.g., sample period and stacking parameter) it can take tens of seconds to complete a static measurement. The results of the static measurement are written into a binary data file containing only a single data point representing the average (stacked) result, usually over tens or even hundreds of repetitions of the transmitter's base frequency.

Data are acquired in time blocks that consist of a fixed number of transmitter cycle "repeats." Both the period and the repeat factor are operator selectable and are varied in multiplicative factors of 3. The MetalMapper also averages an operator-specified number of acquisition blocks (NStack) before the acquired data are saved to disk. The decay transients that are received during the off-times are stacked (averaged) with appropriate sign changes for positive and negative half-cycles. The decays in an individual acquisition block are stacked, and the decays in that block are averaged with other acquisition blocks (assuming the operator has selected NStack >1). The resultant data are saved as a data point. Figure 2-2 shows the typical configuration of the instrument used for collecting cued data.

Figure 2-2. Antenna Array and Typical Deployment of the MetalMapper System

In its present (third generation) form, the MetalMapper has been demonstrated and scored at numerous live site demonstrations carried out by ESTCP. The performance of the MetalMapper at these sites is documented in formal reports issued by the various contractors working on those projects.

2.2 TEMTADS

The EMI sensor used in the TEMTADS array is based on the Navy-funded Advanced Ordnance Locator (AOL) developed by G&G Sciences Inc. The AOL consists of three transmit coils

arranged in a 1-meter cube. The TEMTADS has adopted the transmit (Tx) and receive (Rx) subsystems of this sensor directly, converted them to 35-centimeter (cm)-square sensors that can be assembled in a variety of array configurations, and made minor modifications to the control and DAQ to make it compatible with the deployment scheme.

A photograph of a standard TEMTADS sensor element (as used in the ESTCP MR project MR-200601 array) under construction is shown in the left panel of Figure 2-3. The transmit coil is wound around the outer portion of the form and is 35 cm on a side. The 25-cm receive coil is wound around the inner part of the form, which is reinserted into the outer portion. An assembled sensor with the top and bottom caps used to locate the sensor in the array is shown in the right panel of Figure 2-3.

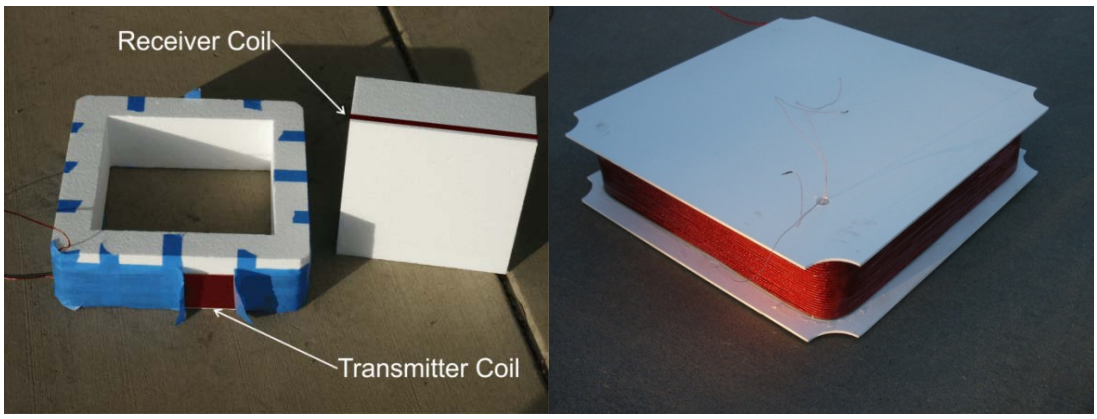

Figure 2-3. Construction Details of an Individual TEMTADS EMI Sensor

In addition to the TEMTADS 5x5 array developed under ESTCP MR-200601, the TEMTADS man-portable (MP) 2x2 cart system was designed and built using the same sensor elements. After demonstration of the MP system at the Aberdeen Test Center Standardized UXO Test Site in August 2010, revision of the sensor technology was indicated for the MP system to collect sufficient data over an anomaly. A modified version of the sensor element was designed and built, replacing the single, vertical receiver loop of the original coil with a three-axis receiver cube. These receiver cubes are identical in design to those used in the AOL2 and Geometrics MetalMapper (ESTCP MR-200603) system with dimensions of 8 cm rather than 10 cm. The BTG MPV2 system (ESTCP MR-201005) uses an array of five similar receiver cubes and a circular transmitter coil. The new sensor elements are designed to have the same form factor as the originals, aiding in system integration. A new coil under construction is shown in Figure 2-4.

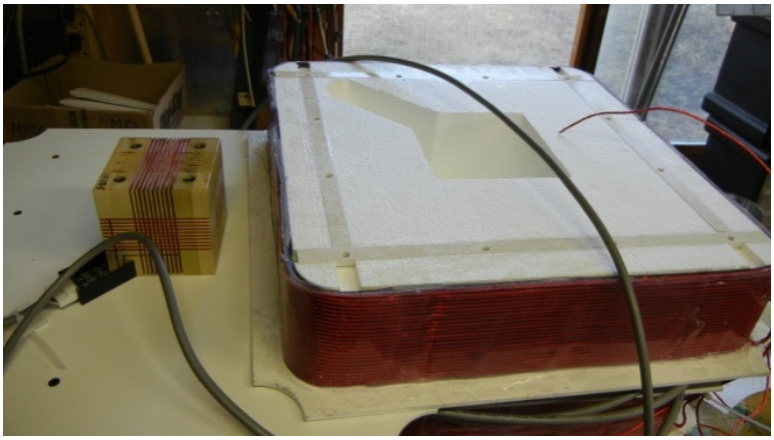

Figure 2-4. Individual Updated TEMTADS EMI Sensor with Three-Axis Receiver

Decay data are collected with a 500 kilohertz (kHz) sample rate until 25 milliseconds after turn-off of the excitation pulse. This results in a raw decay of 12,500 points—too many to be used practically. These raw decay measurements are grouped into 121 logarithmically spaced "gates" with center times ranging from 23 microseconds to 24.35 milliseconds, with 5% widths, and are saved to disk.

2.3 SENSOR ARRAY

The TEMTADS comprises four individual EMI sensors with three-axis receivers, arranged in a 2x2 array as shown in Figure 2-5. The center-to-center distance is 40 cm, yielding an 80-cm x 80-cm array. A picture of the array mounted on the TEMTADS man-portable 2x2 cart platform is shown in Figure 2-6.

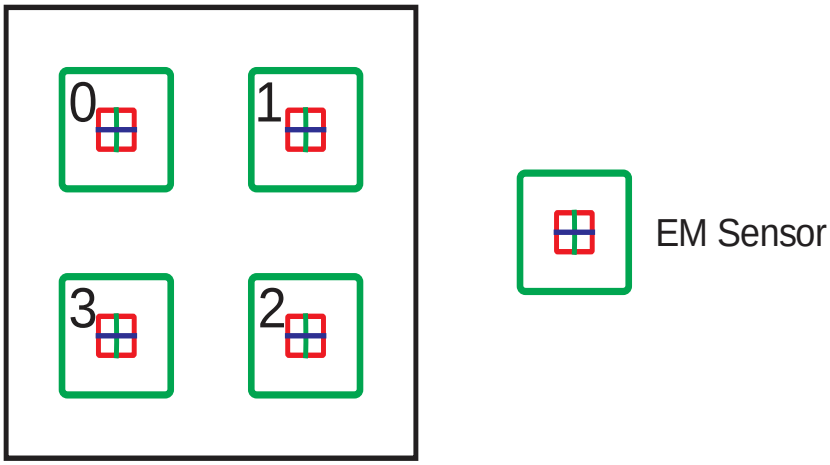

Figure 2-5. Sketch of the EMI Sensor Array Showing the Position of the Four Sensors

Figure 2-6. TEMTADS Man-Portable 2x2 Cart Sensor Platform

2.4 ADVANTAGES AND LIMITATIONS OF THE TECHNOLOGY

2.4.1 Advantages

The primary advantage of the MetalMapper, TEMTADS, MPV, and other advanced EMI sensors tested as part of the ESTCP demonstration program (e.g., Berkeley UXO Discriminator, TEMTADS 5x5, man-portable Berkeley UXO Discriminator) is the ability of these sensors to successfully differentiate subsurface TOI from subsurface clutter. The demonstration program has successful proven that these sensors are typically capable of reducing the number of intrusive digs required on MMRP sites significantly. Reductions of >90% have been demonstrated on sites containing ordnance ranging from 37-millimeter (mm) projectiles to 5-inch rockets and nearly everything in between. When functioning correctly, the instruments can collect anywhere from 150 to 400 points per day depending on deployment options (man portable versus vehicle deployed). The main advantage of the MetalMapper with regard to all other advanced EMI sensors is that it is currently commercially available. The TEMTADS is also generally available from the Naval Research Laboratory with enough advanced planning, while the other sensors mentioned are generally only used by the organizations that developed them. Geometrics plans to develop a commercially available TEMTADS sometime in 2015.

2.4.2 Limitations

MetalMapper

The greatest limitation of the MetalMapper is its size—both of the sensor itself and of the accompanying computer, screen, and cables. The system is designed primarily for use in relatively flat, open fields and cannot currently be used very effectively in wooded areas. Given the large size, the MetalMapper generally needs to be transported via a vehicle like a tractor, skid steer, or extendable-reach forklift. The mostly wooden sled used for many of the demonstration projects was designed to fit on the rear three-point hitch of many small- to medium-sized tractors. Other versions of this sled have an adapter designed to attach to the loader on the front of tractors.

All available versions of this sled are owned by various USACE offices, and it is generally unknown which version of the adapter will be available for a given project. Parsons planned on rear mounting the sled used for another classification project at Camp Sibert, AL, but received a damaged front-mounting version that did not fit on the loader of the tractor that had been rented for the project. The use of a tractor rented for a project at the Hawthorne Army Depot in Nevada proved to be completely unfeasible given the site conditions (beach sand with dunes that the tractor could not navigate safely), and two days were spent locating another usable transport vehicle. Another mostly fiberglass sled has been designed, but that one will only fit on a skid steer or a large vehicle capable of being mounted with a skid steer adapter. Available sled designs and transport vehicles need to be identified well before the field team is deployed, with significant thought given to the applicability of the vehicle to a given site. Because the TEMTADS is man portable, there are far fewer transport issues, although the operator-worn backpack is not light and consideration needs to be given to site conditions with regard to the operators.

In addition to the transport concerns, the MetalMapper requires at least two 12-volt batteries to run, and three if the transport vehicle's battery cannot be used to power the screen and the inertial measurement unit (IMU). There were no power outlets available for overnight changing at the former Camp Beale site, so the team needed two extra batteries and a gas-powered generator that could be used to charge the second set of batteries during the day while the other set was in use.

TEMTADS

The largest TEMTADS-specific drawback was the lack of a real-time method for positioning the sensor relative to the source in the field, as with the "dancing arrows" on the MetalMapper display. The operators were limited to placing the sensor on a flag located by other means, such as a reacquisition team with an EM61. There was no way to determine whether the TEMTADS point was collected over the source without a full inversion in UX-Analyze. While this is also the case with data collected with the MetalMapper, the dancing arrows at least offer an indication that the sensor is in the correct place relative to the source. The TEMTADS has been upgraded for use with an in-field quality control (QC) program that performs a relatively quick inversion after a data point is collected after Parsons' work at Camp Beale. If the in-field inversion suggests that the original point was not collected over a source, the program directs the operator to the location of the nearest source, and a second point can be collected without waiting to be notified by the data processor. The TEMTADS can also now be integrated with a GPS or robotic total station for more accurate point location in the field.

Finally, all of these sensors can be extremely difficult to repair in the field. As an example, a transmitter failed on different MetalMapper systems during both the Fort Sill demonstration and the Camp Beale Pilot Study. The problem was diagnosed in the field in both cases, but only the Fort Sill issue could be fixed in the field. Luckily, Camp Beale was within driving distance of the Geometrics office in San Jose, and the time spent on transport and repair was limited. Various wrappings of the triaxial receivers have failed on other projects as well. To date on Parsons' projects, all failures have been for wrappings on outer receivers, and the data was not significantly affected as long as the data from the malfunctioning wrapping was not used in inversion. It is assumed this would have been a much larger problem had the issue been with one of the three middle receivers. It seems that data collection could be put on hold for a week or more if the sensor needs to be shipped to Geometrics from a more remote site.

3.0 PERFORMANCE OBJECTIVES

The data collection and analysis objectives for the various demonstration projects are summarized in Table 3-1. More detail regarding the performance objective tests and success criteria can be found in the Demonstration Reports for each site.

Table 3-1. Performance Objectives for this Demonstration Projects

Performance Objective	Metric	Data Required	Success Criteria
EM61 Detection Data Collection Objectives			
Complete coverage of the demonstration site	Along line point spacing Survey coverage	Mapped survey data	98% of data points ≤25 cm along line ≥98% coverage at 0.5-meter line spacing
Repeatability of instrument verification strip (IVS) measurements	Amplitude of electromagnetic anomaly Measured target locations	Twice-daily IVS survey data	Amplitudes ±25% Location ±25 cm
Detection of all TOI	Percent detected of seeded items	Location of seeded items Anomaly list	100% of seeded items detected
Reacquisition Objectives (TEMTADS targets only)			
GPS/Trimble Robotic Total Station accuracy	Difference between measured and known monument locations	Known location of QC point Measured location of QC point	100% of tests within 10 cm of expected location
EM61 static test repeatability	Difference between measured Ch2 response and standard Ch2 response	Standard response for test object Measured response for test object	100% of tests within ±10% of standard
Correctly locate flag locations	Location of placed flag relative to dynamic EM61 target	Location of EM61 target GPS-located position of reacquired location	All flagged locations >30 cm from picked location will be re-surveyed; flagged locations >73 cm from picked location will be flagged at both picked and reacquired locations
Cued Data Collection/Processing Objectives			
Correctly identify seed items in IVS	Percentage of IVS items identified correctly	Twice daily IVS survey data	100% of IVS items identified correctly with confidence metric of >0.7

Performance Objective	Metric	Data Required	Success Criteria
Correctly position sensor relative to source	Distance between collection location and inverted target location	GPS-located collection location Modeled target location	100% of inverted locations within 40 cm of collection point unless re-shot also outside radius[1]
Cued Data Collection/Processing Objectives			
Correctly position sensor relative to EM61 target (MetalMapper only) [2]	Distance between MetalMapper collection location and EM61 target location	GPS-located collection location EM61 target location	100% of collection points within 73 cm of EM61 target location[2]
Cued Data Analysis and Classification Objectives			
Maximize correct classification of TOI	Percentage of TOI retained	Prioritized dig lists Scoring reports from Institute for Defense Analyses	All TOI classified correctly
Maximize correct classification of non-TOI	Percentage of false alarms eliminated	Prioritized dig lists Scoring reports from Institute for Defense Analyses	50% of non-TOI left in ground
Correctly identify type of TOI [3]	Percentage of TOI correctly identified by group	Prioritized dig lists Scoring reports from Institute for Defense Analyses	75% of TOI identified correctly
Correctly identify type of non-TOI [3]	Percentage of non-TOI correctly identified by group	Prioritized dig lists Scoring reports from Institute for Defense Analyses	50% of non-TOI identified correctly
Minimize number of "Can't Analyze" targets	Percentage of targets that cannot be classified due to questionable data	Demonstrator target parameters	Less than 2% of points identified as "Can't Analyze"
Correct estimation of target location	Accuracy of estimated target parameters for dig list targets marked as "dig"	Demonstrator target parameters Results of intrusive investigation	MetalMapper X, Y <15 cm (1σ) Z <10 cm (1σ) TEMTADS X, Y <60 cm (1σ) Z <15 cm (1σ)

σ □ Standard deviation

[1] In addition to targets with both initial and re-shot inverted locations >40 cm from the collection point, targets collected specifically to be within 73 cm of an EM61 pick location did not negatively affect this objective if inverted locations were >40 cm from the collection point.

[2] All TEMTADS points were collected on a reacquired EM61 point. MetalMapper points with no identified problems (e.g., inversion offset, noise) and no other targets within 2 meters of the target in question were not re-collected.

[3] The requirement to identify types was only applicable for the Camp Beale Pilot Study. See Demonstration Report (Parsons, 2014) for further information regarding groups.

4.0 SITE DESCRIPTIONS

Demonstration project locations included the Former Camp Beale, CA; Former PMTMA, WY; Fort Sill, OK; MMR, MA; former Camp George West, CO; and former WMA, HI.

4.1 SITE SELECTION

Demonstration sites were generally selected in an attempt to increase the complexity of the classification process. The first site in the series, former Camp Sibert in Alabama, had only one TOI, and item "size" was an effective discriminant. A hillside range at the former Camp San Luis Obispo in California was selected for the second of these demonstrations because of the wider mix of munitions, including 60-mm, 81-mm, 4.2-inch mortars, and 2.36-inch rockets. The third site chosen was the former Camp Butner in North Carolina, which was known to be contaminated with items as small as 37-mm projectiles, adding yet another layer of complexity into the process. The sites completed under Parsons' demonstration projects were selected as demonstration sites for the following reasons:

- Camp Beale, CA: varying geology across site, only wooded areas that could only be surveyed using man-portable sensors, suspected munitions ranging from 37 mm to 105 mm
- PMTMA, WY: wide range of munitions, ongoing project with available data set collected by another contractor, not a significant upgrade in difficulty from Camp Beale
- Fort Sill, OK: active base, large list of possible munitions ranging in size from very small (fragmentation balls from 40-mm grenades) to fairly large (3.5-inch rockets), areas of extremely high anomaly density
- MMR, MA: anomaly density as high or higher than Fort Sill, difficult terrain for data collection (stumps, vegetation, impact craters)
- Camp George West, CO: very steep hillside that could only be reached with man-portable sensors (intrusive investigation only)
- WMA, HI: extremely responsive geology with background values varying significantly across small areas, extremely rocky terrain for MetalMapper project; intrusive investigation for MPV surveys performed in area with varying amounts of cultural features

4.2 GEOLOGY

Detailed descriptions of site geology are contained in the Demonstration Reports for each site. In general, the only sites where geology had a significant effect on the advanced sensor data were the former Camp Beale and the former WMA. Geologic effects were noticeable at the former Camp Beale, but they could mostly be rendered negligible with the collection and application of the appropriate background data. A detailed discussion of the background issues noted at the former Camp Beale is contained in the Pilot Study Report (Parsons, 2012). Geologic effects were much more apparent at the former WMA given the site's location on an iron-rich volcanic lava with very little soil cover. Significant discussion of the site geology and its effects on the classification effort are contained in the MetalMapper and MPV Demonstration Reports for the former WMA (Parsons, 2015 and 2016).

4.3 MUNITIONS CONTAMINATION

The following munitions were considered TOI at one or more of the demonstration sites:

- 20-mm cartridges (Fort Sill)
- 37-mm projectiles (Camp Beale, PMTMA, Fort Sill, MMR, WMA)
- 40-mm grenade fragmentation balls with high explosive (HE) filler (Fort Sill)
- 40-mm grenades (Fort Sill)
- 75-mm projectiles (Camp Beale, PMTMA, Fort Sill, Camp George West, MMR, WMA)
- 3-inch projectiles (PMTMA)
- 105-mm projectiles (Camp Beale, PMTMA, MMR, WMA)
- 155-mm projectiles (PMTMA, MMR, WMA)
- 60-mm mortars (Camp Beale, Fort Sill, MMR, WMA)
- 81-mm mortars (Camp Beale, MMR, WMA)
- 4.2-inch mortars (MMR)
- 66-mm light antitank rockets (Fort Sill)
- 2.36-inch rockets (Fort Sill, MMR, WMA
- 2.75-inch rockets (MMR)
- 3-inch Stokes mortars (PMTMA)
- 3.5-inch rockets (Fort Sill, MMR)
- Antitank land mines (Fort Sill, WMA)
- Hand grenades (Fort Sill, WMA)

4.4 SITE CONFIGURATION

Detailed descriptions of and maps showing the areas investigated at the demonstration sites are contained in the Demonstration Reports for each site. The following is a brief summary of the acreages and targets surveyed at each site, where applicable:

- Former Camp Beale Demonstration: 9 acres of 50-acre site; split into MetalMapper (6 acres) and man-portable sensor (3 acres) areas; 1,490 MetalMapper targets
- Former Camp Beale Pilot Study: 27 acres of 50-acre site; split into MetalMapper (17.6 acres) and TEMTADS (9.4 acres) areas; 6,363 MetalMapper targets and 2,806 TEMTADS targets
- Former PMTMA: Analysis of 2,370 MetalMapper targets collected over a 10-acre area by Sky Research, Inc.; no data collection
- Fort Sill: 6 acres; 1,988 MetalMapper targets
- MMR: 6 acres; split into MetalMapper and TEMTADS areas (3 acres each); 2,287 MetalMapper targets
- Former Camp George West: 2 acres; intrusive investigation of 466 targets collected and classified by Sky Research
- Former WMA: 5.3 acres; 1,031 MetalMapper targets.
- Former WMA: 477 intrusive investigation of 477 MPV targets identified by BTG

5.0 TEST DESIGN

5.1 CONCEPTUAL EXPERIMENTAL DESIGN

To varying degrees, these projects were conducted with two primary objectives:

- Test and validate detection and discrimination capabilities of currently available and emerging advanced EMI sensors developed specifically for discrimination on real sites under operational conditions.
- Investigate in cooperation with regulators and program managers how classification technologies can be implemented in MEC cleanup operations.

The key components of this method were:

- collecting EM61 data across each site and selecting anomalous areas in that data;
- seeding the sites to determine the effectiveness of the advanced sensors;
- collecting advanced sensor data;
- analyzing the advanced sensor data using physics-based models to extract target parameters such as size, shape, and materials properties;
- using those parameters to construct a ranked anomaly list;
- selecting verification digs from the subset of targets classified as non-digs on the ranked dig list; and
- intrusively investigating the dig and verification targets.

Whenever possible, blind seeding for both EM61 and advanced sensor QC was performed before EM61 data collection so targets for the seeds would be present in that data. Advanced sensor cued data were collected over targets selected from the EM61 data, and the resulting data were analyzed by one or more demonstrators. Demonstrators processed the individual cued data sets to extract various parameters for each of the targets. Classifiers were developed based on the resulting parameters and a very limited set of site-specific ground truth, and each demonstrator submitted one or more ranked dig lists for each site.

The ranked dig lists were submitted with all targets used as ground truth at the top ("Must Dig") followed immediately by targets for which reliable parameters could not be extracted ("Can't Analyze"). The remaining targets were ranked from most likely to be TOI to most likely to be clutter, with a stop-dig point identified at a specific point in the dig list (all targets above this point would be dug, all below would be left in the ground). In later demonstrations, it was also required that each point be identified with an approximate size (TOI) and a size and shape (non-TOI). These inputs were scored by the Institute for Defense Analysis with emphasis on the number of items correctly labeled nonhazardous while correctly labeling all TOI.

Verification digging typically included the intrusive investigation of all anomalies on the master dig list, again with the exception of the Camp Beale Pilot Study. The Pilot Study verification digging consisted of only a relatively small portion of the targets classified as non-TOI on the single dig list submitted for the project. The verification digs for that project were selected from the non-TOI list by USACE personnel. For all intrusive investigations, each target was uncovered, photographed, located with a cm-level GPS, and removed.

5.2 SITE PREPARATION

5.2.1 Brush Cutting/Surface Clearance

Brush cutting and surface sweeps were performed as necessary before collection of the EM61 data used to select targets for the advanced EMI surveys. The main objective of the surface clearances was to ensure that no hazardous items would be encountered prior to the nonintrusive phases in the demonstration area and to remove metallic surface debris from the grids.

5.2.2 Initial EM61-MK2 100% Coverage Survey

EM61 surveys were performed, as necessary, before the collection of advanced EMI data and were used to identify targets for the advanced EMI surveys. In many cases, preexisting EM61 data collected as part of another ongoing project were leveraged for use on the demonstration projects. For those sites where EM61 data were collected specifically for the demonstration project, data were collected along parallel lines spaced 50 cm apart, with location typically determined using RTK GPS or robotic total station units. Fiducials were used in limited cases in thickly wooded areas. The EM61 was set up in the four-channel mode.

5.2.3 Seeding Operations

At most live sites, the ratio of clutter to TOI is such that only a small number of TOI may be found in the investigation area—far from enough to determine classification performance with acceptable confidence bounds. To avoid this problem, sites were seeded with enough TOI to ensure reasonable statistics.

Proposed seed locations were flagged using either GPS or robotic total station units, and anomaly avoidance was practiced at each location to ensure a clean area for emplacement. Seed locations were dug to the size and depth specified in the seeding plan generated for each site. Intrusive operations involved both mechanical and manual procedures to meet exact specifications and to minimize burial evidence. Prior to emplacement, magnetic north was determined. Once magnetic north was established, the seed item was positioned with the nose pointing to the exact azimuth and dip angle specified by Parsons. The dip angle specifications were set to a 45-degree tolerance, with the exact angles measured with a level. Exact angles above horizontal and below horizontal were recorded. After all the emplacement requirements of depth, inclination, dip angle, length, and location were completed, a photo was taken of the seed item in the burial location. All the emplacement information along with the seed item and north direction is visible in the photos.

Seed location holes were not backfilled until the final QC check was completed. This consisted of comparing the location with the original designated location, capturing the center location of the emplaced seed item with GPS, and checking the depth, inclination, and dip angle of each seed item. Once these checks were accomplished, the backfilling was started with a shovel to prevent any excess movement of the seed items.

5.2.4 Instrument Verification Strips (IVSs)

One or more instrument verification strips (IVSs) were constructed at each of the project sites where advanced sensor data were collected. IVSs generally contained four or five ISOs or inert munitions of the type suspected at each respective site and a cleared location intended to be used as a background point to correct the IVS data.

5.3 SYSTEM SPECIFICATION

5.3.1 MetalMapper

The MetalMapper sensor and DAQ are described in detail in Section 2.1. During the projects, the antenna array was placed in a sled attached to either the rear three-point hitch of a tractor or to the front of an extendable reach forklift. A Trimble R8 GPS was mounted directly above the sensor array using a wooden tripod, and an IMU was attached to the wooden support used to stabilize the X- and Y-direction transmitters, also directly above the center of the array. These instruments streamed positional data constantly, at a rate of approximately 10 Hz. The two instruments were connected to the DAQ via universal serial bus (USB) ports, and the incoming data were used both to navigate from point to point and to locate the collected data.

5.3.2 TEMTADS

The TEMTADS sensor and data acquisition system are described in detail in Section 2.2. During the Camp Beale Pilot Study, the antenna array was placed on a cart that could be pushed by one of the two data collection team members. The other team member was responsible for naming data files and starting data collection via a tablet computer wirelessly connected to the data collection computer in the backpack. Points were collected directly on top of flags placed by a reacquisition team that used an EM61 to relocate the targets identified in the original EM61 data set. All targets were located according to a local X, Y coordinate system with the center of the sensor on the 0, 0 point. Inverted source locations were translated to the project coordinate system during post-processing.

5.4 CALIBRATION ACTIVITIES

5.4.1 Test Pit and Instrument Verification Strip Data Collection

A test pit or test stand was constructed at each site before starting data collection. The pits were deep enough to fit the largest test item both horizontally and vertically. The items placed in the test pits consisted of available objects that were either suspected to be present onsite or were known to have been used as seed items. Test pit items were oriented in either three directions (ISOs; no difference between nose up and nose down, oriented horizontally, vertically, and 45 degrees) or five directions (inert ordnance; oriented horizontally, vertically nose up and down, 45 degrees nose up and down) relative to the sensor being tested and were placed at depths expected to produce a strong signal-to-noise ratio for each item.

In addition to the test pit data, data were collected over an IVS twice daily, before and after daily data collection. All data collected over the IVSs were inverted in the field as described in Section 6.2 and compared to their respective target libraries as described in Section 6.4. Two tests were performed using the IVS data:

1. Inverted locations were compared to the known locations for the IVS seed items, with the differences between the modeled and known locations expected to be <15 cm X,Y and 10 cm depth.
2. The item identified by the target library comparison was compared to the actual buried item, and it was expected that the identified item matched TOI with a confidence high enough that it would be marked as a dig (0.7 confidence expected in the field).

5.4.2 Background Data

Background data were generally collected at least every two hours. MetalMapper background collection points were determined by the operator who searched for a clear location using the dancing arrows display on the computer screen. TEMTADS background collection points were identified by the reacquisition team using an EM61 and a Schonstedt magnetometer. The reacquisition team flagged clear locations for later collection by the TEMTADS team. Background data were collected more than once every two hours if the operator felt another point was necessary for any reason (e.g., moving from one location onsite to another, changes to the configuration of the instrument, changing field conditions such as rain).

5.5 DATA COLLECTION PROCEDURES

5.5.1 MetalMapper Data Collection

The operator moved the array by lifting the sled, navigating to the vicinity of each selected point using the graphic display on the computer monitor, and setting the MetalMapper down on the point. Reacquisition of the EM61 targets selected for cued data collection was accomplished using dancing arrows displayed on the monitor. The dancing arrows display shows the seven receivers in the array, arranged as they are in the Z-coil, typically with a blue arrow pointing out of each. The arrows point toward the metallic source nearest each of the receivers. Under ideal conditions, one source is in the vicinity of the selected point, and all of the arrows point inward toward the center of the array. In the case of multiple sources, one or more of the outer arrows may point outward from the array toward another piece of metal. Generally, the operator attempted to position the array such that the arrows in the three receivers closest to the middle of the coil were pointing at each other.

The MetalMapper single-point or cued-collection mode was used for all data collection. Once the MetalMapper was positioned correctly above the target, the operator collected a data point using the settings indicated in Table 5-1.

Table 5-1. MetalMapper Acquisition Parameters

Mode	Tx Mode	Hold-Off Time (µs)	Block Period(s)	Rep Fctr	Dec Fctr (%)	Stk Const	Base Freq (Hz)	Decay Time (µs)	No. Gates	Sample Period (s)	Sample Rate (S/s)
Static	ZYX	50	0.9	27	10	10	30	8333	50	9	N/A

Static targets were identified according to the identification (ID) determined for each target picked in the dynamic EM61 survey. For repeated measurements associated with a single target point, 10,000 was generally added to the original ID. The standard addition for repeats during the Camp Beale Pilot Study was 50,000 because it was possible that more than 10,000 targets would be collected (For example, the re-shot for 0001 was 50001.

5.5.2 TEMTADS Data Collection

Data collection was performed by two field teams: a reacquisition team and a TEMTADS team. The reacquisition team consisted of a geophysicist and a UXO Technician II; the TEMTADS team consisted of two geophysicists. The UXO technician on the reacquisition team removed any metal identified during flag placement and made a note of anything removed at each point so that removed items could later be compared to TEMTADS results. The two TEMTADS operators switched between pushing the cart and operating the tablet computer used to control data collection so one person was not carrying the backpack for the entire day.

The TEMTADS single-point or cued-collection mode was used for all data collection at Camp Beale. Once the TEMTADS was positioned correctly above the flag placed by the reacquisition team, the operator collected a data point using the settings indicated in Table 5-2.

Table 5-2. TEMTADS Acquisition Parameters Used at Camp Beale

Mode	Tx Mode	Hold-Off Time (µs)	Block Period(s)	Rep Fctr	Dec Fctr (%)	Stk Const	Base Freq (kHz)	Decay Time (ms)	No. Gates	Sample Rate (S/s)
Static	XXXX	25	0.9	9	5	18	500	24.35	122	N/A

5.5.3 Scale of Demonstration

The areas covered and number of targets surveyed at each site are listed in Section 4.4.

5.5.4 Sample Density

One data point was collected per target, as described in Sections 5.5.1 and 5.5.2; re-shots were collected for targets with modeled locations >40 cm from the collection location for either sensor. Re-shots were also collected for MetalMapper collection locations farther than an expected distance from the EM61 pick, as determined using the standard EM61 to seed item data quality objective (DQO) of one-half-line spacing plus 35 cm.

5.5.5 Data Quality Checks

An instrument calibration check was conducted at the IVS a minimum of twice a day (at the beginning and the end of the field day). The data were inverted and checked against the items in the IVS for type and location. These checks ensured that the instrumentation was functional, properly calibrated, and stable.

Quality checks of all static data points were performed after initial inversion was completed using the UX-Analyze module in Oasis montaj. Inverted target locations were compared to data collection locations to determine if offsets between the two were >40 cm. The MetalMapper collection locations were also compared to the location of the EM61 targets. Re-shots were collected for targets with collection to modeled locations offsets >40 cm for either sensor, or EM61 pick to collection locations distances greater than a maximum expected offset based on the EM61 target to seed item DQO for the dynamic survey.

5.5.6 Data Handling

Collected data were recorded in binary format as files on the hard disk of the DAQs. These data were offloaded to other media at least once, and sometimes more frequently, per day. The computer hard disks had enough capacity to store all the data from the entire site, so these data were not erased until they had been thoroughly reviewed and archived. The data file names acquired each day were cataloged (usually on a spreadsheet) and integrated with any notes or comments in the operator's field book. All data were stored on the hard drive(s) of one or more laptop computers used to post-process data. Data were also archived to a data server in the Parsons office.

Raw, binary MetalMapper files were preprocessed using the TEM2CSV software package, which outputs "preprocessed and located" data files in a text readable format (.csv). Preprocessing included the location of the point in Universal Transverse Mercator (UTM) meters and subtraction of background. Located and background corrected .csv files were imported into Oasis montaj for further processing and analysis. Raw TEMTADS files were converted to .csv files using the TEM Data Logger program used to collect the data. Unlike the MetalMapper pre-processing, TEMTADS .csv files were not translated to UTM coordinates and were not background corrected. Background correction was accomplished using the Level Advanced Sensor Data tool in UX-Analyze, and translation was performed in the project's Microsoft Access database after most classification had already been performed.

5.6 INTRUSIVE PROCEDURES

Reacquisition of all targets was conducted using a Trimble® R8 GPS system. Parsons flagged all target locations with a plastic pin flag that was marked with the target ID and EM61 pre-value. Location data captured by GPS was used to document the center mass of each item; tape measures were used to measure the depth to the center of mass of each item from the ground surface. A photograph was collected of the item with written dig result data shown on a whiteboard. Lastly, an EM61 was used to scan the location to confirm the absence of all metallic items from that target location.

The Parsons team leader orchestrated the movements of the different tasks associated with the information-gathering process. Flags were initially placed in the proper location as indicated by a GPS. An operator with an EM61 would then find the EM61 peak nearest the flag, move the flag to that location, and write the initial EM61 response on the flag. Subsequent intrusive operations consisted of two teams, with each responsible for the intrusive work and white board documentation of their respective holes. A single data collection specialist then transcribed all white board and pre- and post-excavation EM61 values to a paper dig sheet.

Munitions debris and cultural debris scrap collected from target locations were stored in plastic buckets in the field and transferred to the storage conex at the end of each day. Parsons' senior UXO and site safety officer certified all munitions debris scrap by examining each piece individually before final disposition in the sealed bins. All seed items recovered from intrusive operations were stored in a secure area, prepared for final shipment, and returned to the entity that supplied them at the completion of the project. Shipments of inert ordnance included certified and signed U.S. Department of Defense 1348 forms.

All target locations were backfilled after completion of the excavation. Once the final targets were excavated and backfilled, Parsons conducted a walkthrough and confirmed that all holes were filled and no trash was left behind.

Excavation data collected by the intrusive team was entered into the project Microsoft Access database and reviewed daily. The daily information required the target ID to be connected with intrusive documentation, photo, and GPS coordinates. Assessment of each target item required the coordinates to match the original location and the picture to match the documented findings. Intrusive results were also compared with predicted classification results. Intrusive results that disagreed significantly with predicted results (e.g., advanced sensor data that suggested the presence of TOI with high confidence versus nothing found) were flagged for recheck.

Page Intentionally Left Blank

6.0 DATA ANALYSIS AND PRODUCTS

The processing and analysis steps that were used to generate a dig/no dig decision for each target are described below.

6.1 PREPROCESSING

6.1.1 MetalMapper Preprocessing

The MetalMapper acquisition software uses a convention for assigning a unique name to each data file without the need to manually enter the name. The operator supplies a prefix for the root name of the file (e.g., “Static”). The acquisition software then automatically appends a five-character numerical index to the filename prefix to form a unique root name for the data file (e.g., Static00001). The index is automatically incremented after the file has been successfully written. Although the target ID is not used as the file name in the .tem file, the target ID is stored in the file according to the name of the target highlighted on the MetalMapper screen during collection.

Preprocessing of the MetalMapper .tem files was accomplished using TEM2CSV, a program specifically developed for this purpose. TEM2CSV subtracted the site background from the data point using a background file specified by the user, converted the points from the geographic coordinate system used for collection to the UTM Zone coordinate system used for processing, and exported the resulting data to a .csv file that could be imported into the UX-Analyze package in Geosoft’s Oasis montaj software. The exported .csv file name contained both the collection ID and the target ID (e.g., B2_00001_CBStatic000012_00001 for target 1). Background files were usually collected every two hours in a geophysical quiet location. Unless there appeared to be a problem with a background file, the file was used to correct the data collected from approximately one hour before the background file was collected to one hour after it was collected.

6.1.2 TEMTADS Preprocessing

The TEMTADS acquisition software allows naming files at the time of collection, so all TEMTADS points were identified using the EM61 target ID on the target list. Conversion of the raw data files to text readable .csv files was accomplished using the TEM Datalogger program used to collect the data and then imported into Oasis montaj for all further processing. Background correction for each point was accomplished using the Level Advanced Sensor Data tool in UX-Analyze. As with the MetalMapper data, background points were typically used to correct data points collected one hour before to one hour after the collection of the background point. TEMTADS backgrounds were reviewed more thoroughly than MetalMapper backgrounds based on updates to UX-Analyze from the two surveys that added additional tools for doing so.

6.2 PARAMETER ESTIMATION

All data points were inverted using UX-Analyze to determine modeled parameters for each target that included the location, size, and orientation of the source object; the polarizability of each axis of the object; and information regarding the quality of the data and the relative match between the inverted data and the expected model.

Target inversion was performed using the UX-Analyze batch processing mode with both the single and multiple object solvers. All results for a given target (single object and all multiple object

results) were compared to determine which method returned a result more indicative of TOI. It should also be noted that an update to UX-Analyze changed the way the multiple object inversions were performed. The multiple object solver determines the number of objects present using algorithms that group point clouds into one or more sources. Earlier UX-Analyze versions used only one algorithm for this process and returned one result. The updated version of UX-Analyze used for MMR, WMA, and the TEMTADS data at Camp Beale used four different grouping algorithms and returned four possible results. During target classification (see Section 6.3.3), the result that contained a source with the closest match to a TOI was selected for use.

6.3 TRAINING AND CLASSIFICATION

6.3.1 Confidence Metrics

The polarizability curves developed for each target were compared to a library of known curves compiled using test stand data and test pit data from each site. Libraries were tailored specifically to the TOI expected at each site. An initial comparison between the measured targets and the library data was performed using a weighted confidence metric for the three primary polarizabilities (size: 1, shape 1: 0.5, shape 2: 0.5). For projects that used the most current version of UX-Analyze, the best multiple object solver result (see Section 6.2) was selected using the weighted metric. In addition to the weighted confidence metric generated during the initial comparison of the results to the library, three more metrics were generated for each target:

1. 3-curve metric – size: 1, shape 1: 1, shape 2: 1
2. 2-curve metric – size: 1, shape 1: 1, shape 2: 0
3. 1-curve metric – size: 1, shape 1: 0, shape 2: 0

As a first step, each target was examined by looking at a figure showing the two closest matches for the weighted, 2-curve, and 1-curve comparisons to the library. Results were generally grouped into one of five categories:

1. All three polarizability curves ($\beta1$, $\beta2$, $\beta3$) were usable
2. Only two of the curves ($\beta1$, $\beta2$) were usable
3. Only $\beta1$ was usable
4. No usable curves, but it was determined unlikely that there was a target large enough to be TOI in the acquisition location
5. “Can’t Analyze” (no usable curves, and it was considered likely that the curves were unusable despite the existence of a source potentially large enough to be TOI)

The difference between targets deemed likely to have a source potentially related to TOI (“Can’t Analyze”) and those with unusable curves due to a small or nonexistent source was determined based on the original EM61 response for the target, and the beta noise value and the signal strength calculated for that target during inversion. Additionally, the instrument operator (MetalMapper) or reacquisition team (TEMTADS) noted locations for which no identifiable signal was observed during collection/flagging. All results were considered usable for these targets regardless of noise values and polarization curve appearance at the discretion of the data processor.

6.3.2 Training Data

Training data were primarily derived from previous testing of the MetalMapper using various inert MEC items and the test pit data collected prior to the start of data collection. These data were used to create the libraries of polarizabilities for standard munitions types. In addition to the library comparison, the locations of targets within parameter space plots generated using a decay versus size comparison were examined. These plots were be used to identify groups of targets potentially indicative of a munition that was not expected at a given site. Munitions tend to group together in feature space, and clusters of targets not already classified as TOI were considered potentially indicative of unexpected TOI. One or two examples from each identified cluster were typically requested as training data. Additionally, labels were also requested for 1) targets that matched library items to a particularly high degree according to curve matching, but that exhibited decay/size characteristics similar to those items 2) for targets plotting in the immediate vicinity of any apparent decay/size break line identified between suspected TOI and non-TOI to refine the locations of these lines.

6.3.3 Target Classification

Classification was primarily accomplished using the four confidence metrics generated for each target during the comparison to the library data, the weighted metric, the 3-curve metric, the 2-curve metric, the 1-curve metric, and a feature space plot that took into account values calculated for the geophysical size and decay constant (calculated for time gates 8–32 for the MetalMapper, and 14–63 for the TEMTADS) for each target. A classifier was developed specifically for each site using thresholds for the four confidence metrics and for decay/size values based on the space plots. The classifier used for each project is described in detail in the individual Demonstration Reports.

6.4 DIG LISTS

Each target on the master dig list for each site was given a priority and a confidence metric based on the classifier, with priorities dependent on how the target was classified (e.g., “Can’t Analyze” = priority 0, training = priority 1, target classified as TOI using all three polarizability curves = priority 2) and a confidence metric based on the best match to an item in the library. Dig lists were ordered by ascending priority and descending confidence metric. The dig/no-dig threshold for each site was set at the end of one priority and the beginning of another, although the exact priority numbers were site-dependent.

Page Intentionally Left Blank

7.0 PERFORMANCE ASSESSMENT

7.1 EM61-MK2 DATA COLLECTION OBJECTIVES/REACQUISITION OBJECTIVES

These objectives were developed based on standard MMRP project DQOs. While the EM61 data collection and reacquisition processes were important for detecting and accurately locating targets for the later advanced EMI sensor surveys, a comprehensive evaluation of the effectiveness is not considered necessary for this report. The EM61 and reacquisition surveys went as expected. Further detail regarding individual performance objectives is contained in the Demonstration Reports for sites where these surveys were performed.

7.2 CORRECTLY IDENTIFY SEED ITEMS IN THE INSTRUMENT VERIFICATION STRIP

- The performance objective of detecting >98% of IVS seeds with a confidence metric of >0.7 was passed for all sites with the exception of the former WMA. Field results for the classification of IVS items at the former WMA typically resulted in larger items than were actually present (all WMA IVS items were 37-mm projectiles). It was suspected that the geology at the site was contributing response to the data collected over the seed items despite the background corrections performed for each point. Parsons continued data collection for this site despite the IVS results, while BTG performed the analysis and classification work, which included more rigorous methods of removing geologic effects than were performed by Parsons.

7.3 CORRECTLY POSITION SENSOR RELATIVE TO THE SOURCE / CORRECTLY POSITION METALMAPPER RELATIVE TO EM61-MK2 TARGET

These performance objectives were not considered for some earlier sites (Camp Beale demonstration project, PMTMA, Fort Sill). These objectives were added as target collection goals based on the distance between collection points and actual seed locations on these projects. In these earlier projects, Institute for Defense Analysis scoring did not fail a TOI incorrectly classified as non-TOI if the collected point failed either of these objectives. For all later projects except WMA, the metrics were passed for 100% of the targets, or the target for which one or both objectives was not achieved was identified as a “Can’t Analyze” requiring intrusive investigation on the dig list. The number of targets labeled as digs due to exceedances of these metrics over the course of the demonstration projects was negligible (<1%).

At the former WMA, an initial modeled location for each MetalMapper target was determined using an in-field QC program, and a re-shot was collected for any target for which the source modeled farther than 30 cm from the collected point. No additional re-shots were collected if a source did not model underneath the first re-shot location. The field team did not have sufficient time to re-shoot any targets that did not have sources within 40 cm of the collected location despite the appearance of a modeled source within 30 cm of the collection point in the field (i.e., the final model did not agree with the in-field model).

7.4 MAXIMIZE CORRECT CLASSIFICATION OF TOI

Table 7-1 summarizes Parsons' demonstration project results with regard to the detection of all TOI present on the respective sites.

Table 7-1. Demonstration Results and TOI

Demonstration Project	% TOI Classified Correctly
Former Camp Beale Demonstration	99.2%
Former Camp Beale Pilot Study	100%
Former PMTMA	100%
Fort Sill	97.5%
MMR	92.1% (Phase I), 83% (Phase II)
Former Camp George West	*cued data acquisition and classification performed by Sky Research*
Former WMA MetalMapper	*classification performed by BTG*

Both the Camp Beale Pilot Study and PMTMA data sets passed the objective of correctly classifying all TOI as dig targets. The misses at the remaining sites were generally considered reasonable: The one Camp Beale Demonstration miss was due to an exceedance of the allowable cued collection to dynamic target offset (not yet an objective for that site), all but one of the Fort Sill misses were extremely small (40-mm) grenade fragmentation balls that were not expected to be present without the rest of the grenade, and the overall goal of the MMR project was to reduce the amount of large ordnance containing energetic filler present onsite rather than to remove every TOI present. Almost all of the missed TOI at MMR were thin-walled, 60-mm illumination rounds, which produced a rapidly decaying response typically unexpected for TOI. The MMR Report concluded that the project was successful if the illumination rounds were not a significant concern, or if the illumination rounds could be classified as TOI if significantly more excavation of non-TOI was acceptable to excavate the majority of these items.

7.5 MAXIMIZE CORRECT CLASSIFICATION OF NON-TOI

Table 7-2 summarizes Parsons' demonstration project results for the reduction in non-TOI digs achieved at each site:

Table 7-2. Demonstration Results and Non-TOI

Demonstration Project	% Reduction in Non-TOI Digs
Former Camp Beale Demonstration	78.2%
Former Camp Beale Pilot Study	90.9%
Former PMTMA	78.5%
Fort Sill	61.3%
MMR	78%
Former Camp George West	*cued data acquisition and classification performed by Sky Research*
Former WMA MetalMapper	*classification performed by BTG*

All of the Parsons classification projects successfully classified >50% of the clutter on each site as clutter.

7.6 CORRECTLY IDENTIFY TYPE OF TOI/CORRECTLY IDENTIFY TYPE OF NON-TOI

The ID of the type of TOI and non-TOI objectives were only applicable to the Camp Beale Pilot Study. More than 91% of the TOI at Camp Beale were identified correctly, and 86% of the non-TOI were identified correctly. Both results were above their respective objectives of 75% and 50%.

7.7 MINIMIZE NUMBER OF "CAN'T ANALYZE" TARGETS

The Camp Beale Demonstration was the only project to have a >2% "Can't Analyze" rate, and the rate for that project was <3%. This was the first project completed, and lessons learned at this site allowed better comparison of EM61 target data with advanced sensor parameters. Application of these comparisons resulted in a lower percentage of "Can't Analyze" targets at subsequent sites.

7.8 CORRECT ESTIMATION OF TARGET PARAMETERS

The standard deviation of the offsets between the predicted and actual locations of the source objects on most of the projects was slightly above the required parameters of 15 cm horizontal distance and 10 cm vertical distance. However, these comparisons generally took all of the targets collected into account. Comparison of the offsets for only those targets identified as digs on the ranked dig lists and for only those targets that ended up being TOI were usually much closer to passing the metrics than the entire data set. It appears that the locations for the much smaller clutter that account for the non-dig/non-TOI targets were modeled much less accurately than the locations for the larger objects that typically ended up as dig targets on the dig list. Sites with very high anomaly densities and larger TOI (i.e., Fort Sill and MMR) also tended to exhibit larger offsets than the sites with lower target densities and smaller TOI. This appears to have been a combination of less-accurate modeled locations due to the increased density of sources and offsets caused by the predicted location modeling on one end of a large, somewhat inverted TOI while the recovery location was measured in the middle. This objective was passed for both the horizontal and vertical offset during the Camp Beale Pilot Study, which was the only project to include the intrusive investigation of only targets identified as digs on the ranked dig list.

Page Intentionally Left Blank

8.0 COST ASSESSMENT

Cost assessments were evaluated by comparing the costs of advanced EMI sensor classification techniques incorporated with conventional intrusive costs to traditional intrusive costs alone. The advanced sensor costs included the cost of instruments, surveying, surface sweep, seeding, dynamic detection survey, cued data survey and analysis, and intrusive investigation; the conventional intrusive costs included the cost of instruments, surveying, surface sweep, dynamic detection survey, and intrusive investigation.

8.1 COST MODEL

The cost model shown in Table 8-1 is an example showing the current expected costs to perform an advanced sensor cued survey on a relatively standard site. The model is based on a site with approximately 2,000 targets, uses current expected production rates, and removes site-specific considerations that would add significant costs, e.g., extremely remote sites, either for shipping purposes or for time lost during transit from a field office to the data collection location (both former WMA).

Table 8-1. Details of Costs Tracked

Cost Element	Data Tracked During Demonstration	Estimated Costs
MetalMapper Survey Costs		
Instrument costs	MetalMapper rental ($500/day; 22 days including shipping time) MetalMapper prep fee (project) MetalMapper shipping (project) Tractor rental (project) Tractor mob/demob (project) RTK GPS cost ($800/week; 3 weeks) Shipping (RTK GPS, etc.; project) **Total** Per target	$11,000 $1,000 $2,800 $1,365 $250 $2,400 $324 **$19,139** **$9.56**
Survey Costs	Field-related labor (two geophysicists, UXO Technician II), equipment setup, test pit data collection, cued data collection, preprocessing, initial target inversion for QC checks, non-equipment direct costs (e.g., per diem, hotel, fuel) Per target	$42,083 **$21.04**
Analysis Costs	All processing and analysis performed following the completion of field activities Per target	$8,000 **$4.00**
Intrusive Costs		
Investigations	All costs related to the intrusive investigation Cost per anomaly to intrusively investigate	$200,000 **$100**

8.2 COST DRIVERS

Based on the factors described above, the total per target cost for the MetalMapper-related work is $34.60. The estimated production rate for the hypothetical project was 300 targets collected per day, with one day of re-shots, for a total of 8 days of data collection. The estimated production rate also included 2 days of set-up, 1 day of take-down, and 1 day of test pit data collection, for a total of 12 days onsite. Five days of transport each way for MetalMapper rental was also assumed. The intrusive costs have been determined based on actual costs from numerous previous MMRP projects.

8.3 COST BENEFIT

For a production removal action project with 10,000 targets selected for investigation, the $34.60/target cost for data collection and processing is used and the intrusive costs are expected to be closer to $100/target. The cost model assumes a 75% reduction in the number of clutter items dug during the intrusive investigation, which is lower than most of the demonstration projects and considerably lower than the results seen on more recent non-demonstration projects completed by Parsons. The use of advanced sensors would yield a potential cost savings of $422,000, based on the following assumptions:

- 10,000 targets at $100/target for intrusive investigation = $1,000,000.
- Reduction of 7,500 targets = a reduction of $750,000 in excavation costs.
- MetalMapper costs for collecting and analyzing 10,000 targets at $34.60/target = $346,000.

Total net savings under this scenario equals $404,000 (approximately 40%).

9.0 IMPLEMENTATION ISSUES

9.1 IMPLEMENTATION ISSUES

The largest implementation issues on the various projects were the result of failures of MetalMapper transmitters and receivers. Diagnosis and repair of transmitter problems required 2–5 days of field time on the Fort Sill and Camp Beale Pilot Study projects. Receiver issues were typically identified, determined to be relatively unimportant given the location(s) of the malfunctioning receiver (always on outer receiver, non-Z orientation wrappings), and largely ignored in the field. Responses from these receivers were not used in inversion, and repairs were completed, as necessary, following data collection.

The serial-to-USB cable used to stream data from the GPS and IMU to the MetalMapper computer on the Camp Beale and Fort Sill projects also led to numerous software crashes on those projects. Newer versions of these cables fixed the problem, so this issue is no longer considered a concern moving forward.

The largest implementation issue with the TEMTADS was a re-shot rate nearing 25% for the Camp Beale Pilot Study. The TEMTADS survey area was tree covered and much rockier than the MetalMapper survey area, and it is suspected that many of the TEMTADS targets were selected based on geophysical noise in the EM61 data.

9.2 LESSONS LEARNED

The following are lessons learned from the demonstration projects:

1. The selection of the vehicle used to transport the MetalMapper has been an issue at various sites. In addition to the tractors used for most of the demonstration projects, Parsons has used extendable reach forklifts and a tracked skid steer to carry the MetalMapper. Parsons has also used three different sled configurations based simply on what was available for each project. Most of the demonstration project sleds were the original white, wooden version that attached to the rear three-point hitch on a tractor. A similar type of sled was used for another project at Camp Sibert, although the mount that arrived with the sled only allowed for the attachment of the sled to the bucket on the front of the tractor. It also arrived at the site damaged to the point that it would not fit on the bucket, and the mount was eventually taken to a local shop to be modified for compatibility with the three-point hitch on the Sibert tractor. A completely different type of sled (yellow, composite version) that only attaches to a skid steer or skid steer adapter was used for the Hawthorne Army Depot project, and it ended up being far too heavy for the tractor rented to carry it. The tractor also proved to be the wrong vehicle for the Hawthorne Army Depot as it quickly became apparent that it was going to get stuck repeatedly in the sand that characterizes the site.

   The identification of the sled to be used for a given project, the specific mount attached to that sled, the correct vehicle for navigating the site's terrain, and an appropriate means of attaching the sled to the vehicle should be done long before the field team arrives to start putting the equipment together.

2. The instruments, particularly the MetalMapper when attached to the GPS and IMU, are very complex pieces of machinery that do not have readily available replacement parts. On standard MMRP projects, it is generally possible to have spare parts onsite for geophysical instruments such as the EM61. Even if it is not economically feasible to have an entire replacement unit, spare cables are generally included with these sensors, and replacement sensors can be overnighted from rental companies. This is not the case with the MetalMapper. The failure of a transmitter or receiver due to circuit board failure in the DAQ, the sensor itself, or a broken cable between the two can result in days of lost time. At this point in the development of the instruments, there is little that can be done to prevent this need aside from taking care of the equipment.

3. No significant data transfer (file transfer protocol [FTP] site) or processing issues were noted during the project. The methods used worked well, and Parsons has continued to use the same methods on numerous subsequent projects. The time required for data processing is likely to increase on future projects given updates to UX-Analyze and the ability to generate additional summary data for each point. Although still a significant effort, the only data products generated by Parsons for the demonstration projects were the Geosoft databases, figures showing the polarizability curves for each target, and space plots. UX-Analyze now allows the creation of decision maps that can include: the polarizability curves, the fit results, a space plot showing the target in question highlighted among all of the other targets in the project or a subset of those targets, and other user-selectable data points. The USACE has requested decision maps on subsequent projects. While certainly useful for more quickly illustrating why a specific classification decision was made for each target, generating three or four base maps for inclusion in approximately 300 decision maps per day is much more time consuming than just generating the polarizability curves.

10.0 REFERENCES

Black Tusk Geophysics, 2016. *MPV Waikoloa Report*.

Black Tusk Geophysics and Parsons, 2015. *Demonstration Plan for the 2015 MPV Study*.

Environmental Security Technology Certification Program (ESTCP), 2011. *ESTCP Munitions Response Live Site Demonstrations: Pole Mountain Target and Maneuver Area, WY*. Draft 2. 1 June.

ESTCP, 2012. *Demonstration Plan: Live Site Demonstration, Massachusetts Military Reservation*. June.

Parsons, 2011. *MetalMapper Data Analyses, Pole Mountain Target and Maneuver Area, ESTCP Project No. MM201157*. Draft 1. June.

Parsons, 2011. *Work Plan for Rocket Pond Area Munitions and Explosives of Concern / Remedial Investigation / Feasibility Study, Fort Sill, Comanche County, Oklahoma*. Final. June.

Parsons, 2011. *Work Plan for Seeding, Geophysical Data Collection, and Intrusive Investigation, Live Site Demonstration, Former Camp Beale, California*. April.

Parsons, 2012. Live Site Demonstrations, Former Camp Beale, ESTCP Project No. MR201104. Final. May.

Parsons, 2013. *Remedial Investigation / Feasibility Study Report, Rocket Pond Area, Fort Sill, Comanche County, Oklahoma*. Final. March.

Parsons, 2013. *Work Plan for Camp Beale Pilot Study MMRP at Camp Beale Formerly Used Defense Site*. Final. May.

Parsons, 2014. Live Site Demonstrations, Massachusetts Military Reservation, ESTCP Project No. MR201104. Final. May.

Parsons, 2015. Live Site Demonstrations, former Waikoloa Maneuver Area, ESTCP Project No. MR201104. Final. May.

Parsons, 2016. MPV Demonstration Report, former Waikoloa Maneuver Area, ESTCP Project No. MR201104. Final. April.

Page Intentionally Left Blank

APPENDIX A POINTS OF CONTACT

Point of Contact Name	Organization Name Address	Phone Email	Role in Project
John Baptiste	Parsons 1776 Lincoln Street, Suite 600 Denver, Colorado 80203	303-764-8804 John.E.Baptiste@Parsons.com	Principal Investigator
Greg Van	Parsons 1776 Lincoln Street, Suite 600 Denver, Colorado 80203	303-764-1927 Greg.Van@Parsons.com	Project Manager

ESTCP Office
4800 Mark Center Drive
Suite 17D08
Alexandria, VA 22350-3605
(571) 372-6565 (Phone)
E-mail: estcp@estcp.org
www.serdp-estcp.org