ESTCP
Cost and Performance Report

(ER-201323)

A Portable Burn Pan for the Disposal of Excess Propellants

May 2016

This document has been cleared for public release; Distribution Statement A

ENVIRONMENTAL SECURITY
TECHNOLOGY CERTIFICATION PROGRAM

U.S. Department of Defense

Page Intentionally Left Blank

This report was prepared under contract to the Department of Defense Environmental Security Technology Certification Program (ESTCP). The publication of this report does not indicate endorsement by the Department of Defense, nor should the contents be construed as reflecting the official policy or position of the Department of Defense. Reference herein to any specific commercial product, process, or service by trade name, trademark, manufacturer, or otherwise, does not necessarily constitute or imply its endorsement, recommendation, or favoring by the Department of Defense.

Page Intentionally Left Blank

COST & PERFORMANCE REPORT

Project: ER-201323

TABLE OF CONTENTS

Page

EXECUTIVE SUMMARY 1

1.0 INTRODUCTION 1

1.1 BACKGROUND 1

1.2 OBJECTIVE OF THE DEMONSTRATION 2

1.3 REGULATORY DRIVERS 2

2.0 TECHNOLOGY 5

2.1 TECHNOLOGY DESCRIPTION 5

2.2 ADVANTAGES AND LIMITATIONS OF THE TECHNOLOGY 8

3.0 PERFORMANCE OBJECTIVES 11

3.1 BURN CAPACITY (QUANTITATIVE) 12

3.2 REDUCTION IN THE COMBUSTIBLE MASS OF CHARGES (QUANTITATIVE) 12

3.3 REDUCTION IN THE MASS OF ENERGETICS (QUANTITATIVE) 12

3.4 UNIT MASS (QUANTITATIVE) 13

3.5 CONTAINMENT OF HEAVY METALS (QUANTITATIVE) 13

3.6 QUICK TURNAROUND (QUANTITATIVE) 14

3.7 INTEGRATION OF BURN PAN INTO TRAINING (QUALITATIVE) 15

3.8 EASE OF USE (QUALITATIVE) 15

3.9 ENVIRONMENTAL AND RANGE CONTROL ACCEPTANCE (QUALITATIVE) 15

4.0 SITE DESCRIPTION 17

4.1 SITE LOCATION AND HISTORY 17

4.1.1 Camp Grayling, Michigan: 17

4.1.2 Fort Indiantown Gap, Pennsylvania 17

4.1.3 Donnelly Training Area, Alaska 17

4.2 SITE GEOLOGY/HYDROGEOLOGY 17

4.2.1 CGMI 17

4.2.2 FIG 18

4.2.3 DTA 18

4.3 CONTAMINANT DISTRIBUTION 20

5.0 TEST DESIGN 21

5.1 CONCEPTUAL EXPERIMENTAL DESIGN 21

5.2 BASELINE CHARACTERIZATION 21

5.3 TREATABILITY OR LABORATORY STUDY RESULTS 21

TABLE OF CONTENTS (Continued)

Page

5.4 FIELD TESTING 22
5.5 SAMPLING METHODS 22
5.6 SAMPLING RESULTS 24
5.6.1 Camp Grayling, MI: 10 June 2013 25
5.6.2 Fort Indiantown Gap, PA: 19 October, 2014 26
5.6.3 Donnelly Training Area, AK: 14 August 2015 27
6.0 PERFORMANCE ASSESSMENT 31
6.1 BURN CAPACITY 31
6.2 REDUCTION IN MASS OF CHARGES 32
6.3 REDUCTION IN MASS OF ENERGETICS 33
6.4 UNIT MASS 34
6.5 CONTAINMENT OF HEAVY METALS 35
6.6 TURNAROUND TIME 36
6.7 INTEGRATION OF BURN PAN INTO TRAINING 38
6.8 EASE OF USE 39
6.9 ENVIRONMENTAL AND RANGE CONTROL ACCEPTANCE 39
7.0 COST ASSESSMENT 41
7.1 COST MODEL 41
7.2 COST DRIVERS 41
7.3 COST ANALYSIS 42
7.3.1 Acquisition 42
7.3.2 Maintenance 42
7.3.3 Storage 43
7.3.4 Waste Disposal 43
7.3.5 Periodic Site Sampling 43
8.0 IMPLEMENTATION ISSUES 45
APPENDIX A POINTS OF CONTACT A-1

LIST OF FIGURES

Page

Figure 1. Pre-ESTCP Portable Burn Pan Prototypes 5
Figure 2. Assembly Drawing of the Howitzer Training System Burn Pan 6
Figure 3. Post-disposal Propellant Found on Range 8
Figure 4. Prototype Burn Pan Developed under SERDP ER-1481 in Use During Training 9
Figure 5. Yellow Post-burn Residues on Snow Adjacent to Burn Pan (65-kg burn test) 13
Figure 6. Lead from the Decoppering Foil in Propellant Charge Following Burn Events 14
Figure 7. Firing Point Sally, Donnelly Training Area, AK, site of ER-201323 Demonstration .. 18
Figure 8. Firing Point 301, CGMI, with Burn Pan on Site 19
Figure 9. Firing Point F-1-10, FIG, Before Placement of Burn Pan (rt.) 19
Figure 10. Firing Point Sally, DTA, with Burn Pan on Site 20
Figure 11. Scorching of Vegetation in Vacinity of Burn Pan Caused by Radiant Heat 32
Figure 12. Wet Propellant (120 kg) and Dry Propellant (460 kg) Burn Residues 33
Figure 13. Final Burn Pan (HUTS). 35
Figure 14. Graph of Component Temperatures During an HUTS Burn Pan Test 37
Figure 15. IR Camera Thermal Image 30 Seconds after a Test Burn 37
Figure 16. Commander and Command Sergeant Major of the Ohio Army National Guard 1/134th Artillery Battalion Prior to First Test of Burn Pan at Camp Grayling, MI 38
Figure 17. Volunteers of the 2/377th PFAR Receiving a Briefing on the Theory and Operation of the CRREL Portable Burn Pan, Donnelly Training Area, AK 39

LIST OF TABLES

Page

Table 1. Concentrations (mg/kg) of 2.4-DNT and NG that May Be Used in Environmental Assessments of Military Training Ranges. 3

Table 2. Chronology of the Development, Testing, and Demonstration of the CRREL Portable Propellant Burn Pan Training Device. 7

Table 3. Performance Objectives 11

Table 4. Baseline Energetics Residue Data for Burn Points 20

Table 5. Gantt Chart for Execution of ESTCP Project ER-201323 23

Table 6. Total Number and Types of Samples Collected for Project Demonstration 24

Table 7. Analytical Methods for Sample Analysis 24

Table 8. Analytical Results for Pre- and Post-Burn Soil Samples (mg/kg): CGMI 25

Table 9. Analytical Results for Post-Burn Pan Residues Sample: CGMI 25

Table 10. Analytical Results for Pre- and Post-Burn Soil Samples (mg/kg): FIG 26

Table 11. Analytical Results for Post-Burn Pan Residues Sample: FIG 27

Table 12. Analytical Results for Pre- and Post-Burn Soil Samples (mg/kg): DTA 27

Table 13. Analytical Results for Post-Burn Pan Residues Sample: DTA 28

Table 14. Pb Analytical Results for Soil Samples: DTA 28

Table 15. Pb Analytical Results for Post-Burn Pan Residues Sample: DTA 29

Table 16. Tested Burn Capacities for Various Models of the Burn Pan 31

Table 17. Reduction in Combustible Charge Mass for Various Models of the Burn Pan 32

Table 18. Reduction in the Mass of Energetics for Various Models of the Burn Pan[1] 33

Table 19. Recovery of Energetics from the Post-Burn Residues in the Burn Pan 34

Table 20. System Mass Data for all Models of the Burn Pan 34

Table 21. Recovery of Pb from Soil Samples Collected Outside the Burn Pan 36

Table 22. Turnaround Times for the Various Burn Pans 36

Table 23. Cost Model for the CRREL Portable Burn Pan 41

ACRONYMS AND ABBREVIATIONS

AK	Alaska
ARNG(B)	Army National Guard (Bureau)
CGMI	Camp Grayling, Michigan
C-MIST	CRREL Multi-Increment Sampling Tool
CM	Centimeter
CoC	Contaminants of Concern
CRREL	Cold Regions Research and Engineering Laboratory
DNT	2,4-Dinitrotoluene
DoD	United States Department of Defense
DRDC	Defense Research and Development Canada-Valcartier
DTA	Donnelly Training Area, Alaska
EPA	US Environmental Protection Agency
ESTCP	Environmental Science and Technology Certification Program
FIG	Fort Indiantown Gap, PA
G	Gram
Ha	Hectare(s)
HPLC-UV	High-Performance Liquid Chromatography-Ultra-Violet detector
HUTS	Howitzer Unit Training System burn pan
IR	Infrared
JBER	Joint Base Elmendorf Richardson (AK)
Kg	Kilogram
m	meter
mg/kg	milligram per kilogram
MI	Michigan
MI	Multi Increment®[1]
MIS	Multi-Increment Sampling
Mm	millimeter
MUTS	Mortar Unit Training System burn pan
NG	Nitroglycerine

[1] Multi Increment is a trademark of Envirostat, Inc.

OB/OD	Open Burn/Open Detonation
OP	Observation Point
Pb	Lead
$PbCO_3$	Lead Carbonate
Ppm	parts per million
QC	Quebec
RCRA	Resource Conservation and Recovery Act
SERDP	Strategic Environmental Research and Development Program
SOP	Standard Operating Procedure
SOW	Statement of Work
SU	Sampling Units
US	United States
USARAK	US Army Alaska
XRF	X-Ray Florescence

ACKNOWLEDGEMENTS

Project ER-201323, A Portable Burn Pan for the Disposal of Gun Propellants, was a very successful project because of the involvement of a great many people. Dr. Bonnie Packer of the Army National Guard (ARNG) was essential in helping me get the project off the ground. She investigated potential test and demonstration sites, put me in contact with essential personnel at those sites, and "greased the skids" for me so that setting up tests was a lot easier than anticipated. Dr. Packer also fully embraced the concept, requesting background reports and papers as well as test reports from all the demonstrations, which she used to develop a Best Management Practices document on the use and benefits of the burn pan for the ARNG. She attended one of the demonstrations and provided valuable feedback on design improvements. I would also like to thank Mr. John Hunt, Environmental Officer, Camp Grayling, MI, and CPT. Patrick Rippeth and 1SG Scott Zaebst of the 1/134th OH ARNG; Ms. Jo Anderson and LTC Mike Fluck, Fort Indiantown Gap, PA, and CPT Lawrence Fagan and SGM Ron Maraffi of the 110th INF PA ARNG; and MS Ellen Clark, Mr. Steve Thurman, and Mr. Derek Mills, Donnelly Training Area, AK, and CPT Nelson Liuzzo and SSG Emmanuel Rodelo of the 2/377th PFAR, 4th BCT/25th ID. These are the people and soldiers on site that, through their assistance and participation, allowed the tests and demonstrations to be successful.

There were many highly skilled and dedicated personnel at Cold Regions Research and Engineering Laboratory (CRREL) who were also key to the project's success. Marianne Walsh and Matt Bigl were indispensable to the project, involved in the test design, test setup, sample collection, and analyses of the samples collected for the tests. Charlie Smith, Andy Bernier, Tommie Hall, Jordan Hodge, Stacey Jarvis, and Sam Beal were also essential field personnel over the life of the project, assisting in the field tests in many ways. Chris Donnelly did a fantastic job in CRREL's machine shop building the burn pans for both this project and for Strategic Environmental Research and Development Program ER-1481. Jordan Hodge assisted Chris in the shop and also provided the drawings for the various incarnations of the pans.

I also thank Dr. Andrea Leeson and Deanne Rider of Environmental Science and Technology Certification Program (ESTCP)'s Environmental Restoration Program for their administrative assistance and encouragement over the course of the project. We all appreciate ESTCP's support for our work.

Page Intentionally Left Blank

EXECUTIVE SUMMARY

Training with munitions will result in the deposition of energetics on ranges. Artillery training with mortars and howitzers adds a unique component to potential range contamination. Munitions are issued with a full complement of propellant charges that are varied according to the state of the equipment and mission. Excess propellant is burned on site as part of the training mission. Research under Strategic Environmental Research and Development Program (SERDP) ER-1481 established that up to 20% of the propellant in these burns may not burn properly or at all, contaminating the burn point where the training occurred. The United States Army Cold Regions Research and Engineering Laboratory (CRREL) developed and tested a prototype portable burn pan under SERDP that enabled artillery batteries to conduct training burns while minimizing the environmental impact of the activity. Through Environmental Science and Technology Certification Program ER-201323, the portable burn pan concept has been refined, tested, and demonstrated to both the Army and the Army National Guard.

OBJECTIVES OF THE DEMONSTRATION

The main objectives of the project demonstration are to validate the portable burn pan technology and to transfer the technology to the end users. Validation was accomplished through a series of test burns at different facilities. Tech transfer was conducted through several avenues, such as presenting our concept to various agencies for review. This had immediate results, as the Army National Guard Bureau adopted the burn pan as a Best Management Practice for their ranges, based on CRREL's prior research conducted under SERDP ER-1481. The CRREL portable burn pan training devices will allow the United States Department of Defense to better train their soldiers while reducing the environmental impact of that training.

Specific objectives were established to determine if the burn pan would be an effective alternative to burning propellant on the ground or in antiquated fixed burn pans. Quantitative performance objectives were a 99.9% reduction of the combustible mass of the propellant charges, recovery of 0.01% or less of the energetics and 10% or less of the lead (if any) outside the pan after a burn, and a turnaround time of <15 minutes between burns. The target mass for the large burn pan was <130 kg with a 120 kg burn capacity and <80 kg mass for the smaller version with a 50 kg burn capacity. All objectives were met for the large burn pan. The propellant mass for small burn pan test was insufficient to test the burn capacity objective. Qualitative objectives included ease of use, acceptance by Range and Environmental managers, and the ability to integrate the burn pan into artillery training. All these objectives were met.

TECHNOLOGY DESCRIPTION

The technology to meet these objectives is a portable burn pan for the expedient field disposal of excess howitzer and mortar propellants. The pan in its current configuration is approximately 1-m wide by 2-m long. It has evolved over the last seven years, the original prototype pan and the second prototype built and tested under SERDP ER-1481.

The system is composed of only three parts, an aluminum base, a stainless steel false bottom, and a removable bonnet that fits on top of the pan **(Fig. i)**. The base elevates the system off the ground while partially containing the burn. The base contains a removable stainless steel false bottom that protects the structure from the high heat of deflagration. The base and false bottom combination provides a dry, semi-enclosed platform that will separate the burning propellant charges from the ground surface and contain the residues from the propellant burn (ash) for easy removal and treatment, if necessary.

A removable, retractable ignition trough passes through the pan and extends into the false bottom to enable safe initiation of the propellant burn. The perforated bonnet partially contains the burn, limiting ejection of large unburned material such as charge bags that loft during the deflagration process. The device is compact enough to transport in a standard small military truck and light enough to be handled by four or fewer personnel. The target propellant charge load is in the 120 kg range for a full-size burn pan, although we recommend limiting the charge load to 90 kg if there is vegetation nearby. The loading dimensions of the false bottom of the pan are 0.9 x 1.9 m.

A second, smaller burn pan, designed for use with mortar training units, was also demonstrated. The smaller size of the unit allows easier movement and is built to accept the smaller charges encountered during mortar unit training. The mortar unit training system burn pan is designed for charge loads of less than 50 kg/burn. The loading dimensions are 0.9 x 1.0 m.

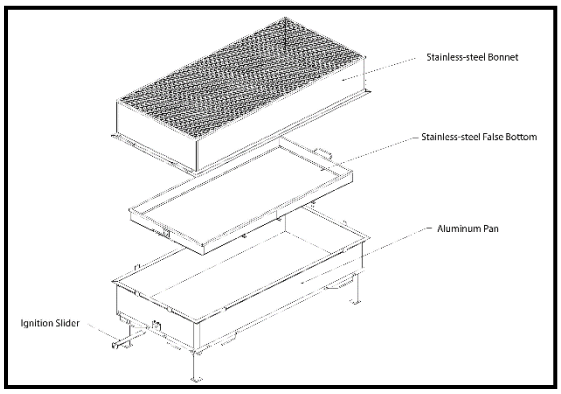

Figure i. Assembly Drawing of the Howitzer Unit Training System Burn Pan

DEMONSTRATION RESULTS

The original testing of the propellant burns, fixed burn pans, and portable burn pans occurred prior to ER-201323 under ER-1481 and US Army funded research. Under ER-201323, three technology demonstrations occurred, all of which were highly successful. Two tests were conducted with the Howitzer Unit Training System and one with the Mortar Unit Training System. The final demonstration of the technology entailed the training unit burning over 450 kg of propellant over six burns. After all tests, both the training units and the facility mangers requested burn pans.

IMPLEMENTATION ISSUES

The CRREL portable propellant burn pan training system has been enthusiastically accepted by all who have participated in the project test and demo program. Environmental and Range officials at all three installations not only asked to keep the burn pans tested at their facilities but asked if they could acquire additional units. The training units also have enthusiastically embraced the concept, with soldiers and officers all asking if they could continue using the burn pans after the completion of the demonstrations. The burn pans have been integrated into the SOPs of the three test installations and the ARNG Bureau has issued Best Management Practices guidance on using the burn pan at all installations that conduct artillery training.

There was some resistance from the regular military to the burn pan. We feel this is philosophical, rather than technical, reflecting an anti-environmental attitude of many of the “old guard” military. Demonstrations are the best tool for overcoming this resistance and promulgating the technology.

1.0 INTRODUCTION

Live-fire training is an integral part of military readiness for our armed forces. The firing of munitions, whether live or practice rounds, results in the expenditure of propellants. When training with artillery, munitions are issued with a full complement of propellant. These charges are never fully utilized and cannot be returned to inventory following completion of the exercise. This propellant is destroyed in one of two ways: by burning at a remote disposal site or by expedient burning at the training site. In many cases, the excess propellant is burned on the ground at the firing points, allowing the soldiers to "train as you fight." This is an inefficient process and may result in significant quantities of residual energetic compounds and lead particles. To address the potential contamination problem while allowing troops to train as they fight, we have developed a portable training device for burning excess gun propellants.

1.1 BACKGROUND

The investigation of excess propellant burns began as part of a United States Army Alaska (USARAK) –funded project to characterize soil contamination on their ranges at Donnelly Training Area outside Fort Greely in central Alaska. One of the areas sampled was an observation point (OP-7) that contained a fixed burn pan for the disposal of excess artillery propellants. This pan was in poor repair, rusted though in the corners, propellant grains and lead particles were scattered around the pan. Sampling of the soil surface around the pan revealed very high concentrations of 2,4-dinitrotoluene (DNT), a Class-2 carcinogen (35 milligram per kilogram [mg/kg]); nitroglycerine (NG), a toxic compound (6.4 mg/kg); and lead (Pb: 5,300 mg/kg), a highly toxic heavy metal. The lead was in very fine particles, easily re-suspended in the dusty conditions at the site **[1] [2]**. Investigations conducted at Camp Grayling, Michigan (MI), by the Environmental Manager there found lead levels in the soil of 5,100 mg/kg and 48 mg/kg of DNT adjacent to a fixed location burn pan **[3] [4]**. The presence of high contamination levels around fixed burn pans was not an isolated occurrence.

Research funded under Strategic Environmental Research and Development Program (SERDP) Project ER-1481 investigated the mass and composition of residues resulting from the direct burn of propellants on the ground. Experiments were conducted on various soil types and on snow in both Canada and the United States (US) to determine residues rates for the burning of different propellants. Up to 18% of the Nitroglycerine (NG) remained after burns conducted on snow **[1].** Propellant grains were also found in significant quantities in areas propellants had been expediently burned. In some locations, the propellants had actually been blown up rather than burned, resulting in very high contamination rates over a wide area. Both Defense Research and Development Canada-Valcartier (DRDC) and Cold Regions Research and Engineering Laboratory (CRREL) realized there was a need for an improved burn pan system. In Canada, the thrust was directed towards a fixed disposal pan, to which excess propellants would be brought for disposal. In the US, we directed our efforts towards a portable pan that can be transported to the firing point where expedient disposal can take place as part of the training exercise. As ER-1481 came to a close, the Canadian Defense Forces implemented the fixed burn pan as part of their standard operating procedure **[5].** In the US, two prototype pans were built. One was tested in conjunction with a trial conducted in Canada and the other one tested as part of a training exercise in Alaska. A third prototype was designed but never built or tested.

1.2 OBJECTIVE OF THE DEMONSTRATION

The main objective of the project demonstration was to validate the portable burn pan technology and to transfer the technology to the end users. Validation was through a series of test burns at different facilities. Data were collected during the burn, including temperature of the burn pan unit, time to cycle through a burn, and working capacity of the pan. Samples were taken to determine ejected residues mass and the mass of the constituents of concern. Mass reduction measurements were taken to determine the efficiency of the pans.

Tech transfer was done through several avenues. First, we worked through various agencies to present our concept for review. This has already been successfully done with the Army National Guard Bureau (ARNG [B]). To encourage site availability, use of the pan, and user feedback, the prototype burn pans were offered to the facilities where the tests were conducted. Tech transfer also occurred through interfacing with potential users at venues such as the SERDP/Environmental Science and Technology Certification Program (ESTCP) In-Progress Review (IPR) meetings and through connections with the range management community.

Both objectives were accomplished for the project. The systems designed and tested were validated to the extent possible. Some performance objectives were not fully tested because the materials (charges) used for the tests were not of sufficient quantity (mass) or composition. Overall system performance, however, was validated. Tech transfer was successful as well. The ARNG Bureau has published guidance recommending the use of the burn pan at all their where excess gun propellant is generated (**Appendix 2**). Range and Environmental Managers at all three facilities readily accepted the burn pans when offered at the conclusion of testing, and the training units also requested access to the pans for their exercises.

1.3 REGULATORY DRIVERS

The disposal of excess propellants is not conducted under any overarching regulation. States may have their own statutes or regulations guiding practices. For instance, the State of Michigan ARNG Commanding General developed a standard operating procedure in 2008 following the investigation of the soils surrounding a burn pan that are detailed above **[6].** In Alaska, local guidance has been issued by US Army Alaska that permits burning of excess artillery propellant at the training site, but encourages the use of fixed burn pans **[7] [8]**. Chapter 3, paragraph B1a of Department of Defense (DoD) Policy to Implement the US Environmental Protection Agency (EPA) Military Munitions Rule **[9]** states that procedures for the open burning of unused propellant charges is a "required element of training and not a waste management activity." Thus, on-site burning of excess propellant charges is not considered a waste disposal action when a part of a training exercise and is not covered by the regulations that govern a fixed waste disposal site such as a fixed burn pan. Federal regulations apply to some of the constituents found in propellants, including NG, DNT, Lead (Pb), and ammonium perchlorate (AP), so control of residues containing these compounds is quite important for range sustainment. Thus, although regulations state that field expedient burning of excess propellant as part of active training is not a waste disposal activity, the residues generated by this activity, when of sufficient concentration (>10%), are covered.

Additional regulatory drivers for an optimized burn pan design are the concentrations of 2,4-DNT and NG in soil that may pose a risk to human health and the environment. Estimates of these concentrations (see **Table 1**) were derived under previous SERDP projects.

Table 1. Concentrations (mg/kg) of 2.4-DNT and NG that May Be Used in Environmental Assessments of Military Training Ranges.

	Military-Specific Environmental Sustainability Indices (Canada)[a]		**Soil Screening Concentration**		**Ecotoxicological Tolerance Values**
Contaminant of Concern	*Human[1]*	*Ecological[2]*	*Biological Activity*	*Terrestrial Plants*	*Soil Invertebrates*
2,4-DNT	0.14	11	104[4]	6–13[3]	20–23[3]
NG	2500	65	114[4]	21[4]	13[4]

[1]Exposure based on soldiers spending 100 days in the field per year.

[2]Based on toxicological data and trophic models for microbes, plants, invertebrates, birds and grazing herbivores.

[3]Sunahara et al. 2009 [10]

[4]Kuperman et al. 2011 [11]

Page Intentionally Left Blank

2.0 TECHNOLOGY

2.1 TECHNOLOGY DESCRIPTION

The technology to meet these objectives is a portable burn pan for the expedient field disposal of excess howitzer and mortar propellants. The portable burn pan was designed for simplicity, ease of maintenance, and ease of use. The pan in its current configuration is approximately 1-m wide by 2-m long. It has evolved over the last seven years, the original prototype pan and the second prototype built and tested under SERDP ER-1481. **(Fig. 1)**

First prototype: All stainless steel (2010)

Second prototype: Aluminum base (2011)

Figure 1. Pre-ESTCP Portable Burn Pan Prototypes

The system is composed of only three parts, an aluminum base, a stainless steel false bottom, and a removable bonnet that fits on top of the pan **(Fig. 2)**. The base elevates the system off the ground, providing both clearance from most combustible materials or snow that may lie beneath it while partially containing the burn. The base contains a removable stainless steel false bottom that protects the structure from the high heat of deflagration. The base and false bottom combination provides a dry, semi-enclosed platform that will separate the burning propellant charges from the ground surface and contain the hazardous debris from the propellant burn (ash) for easy removal and treatment. A removable, retractable ignition trough passes through the pan and extends into the false bottom to enable safe initiation of the propellant burn. The perforated bonnet partially contains the burn, limiting ejection of large unburned material such as charge bags that loft during the deflagration process. The perforated sides of the bonnet prevent a chimney effect that would loft propellant grains out of the pan and into the environment, and an expanded stainless steel mesh tops catches the larger lofted material in the flame. The charge debris is thus contained within the burn zone. The device is compact enough to transport in a standard small military truck and light enough to be handled by four or fewer personnel. The target propellant charge load is in the 120 Kilogram (kg) range for a full-size burn pan, although we recommend limiting the charge load to 90 kg if there is vegetation nearby. The portable device can be transported to the training site, enabling troops to burn excess propellant following training without having to transport the charges to a central burn facility, thus reducing transportation hazards. The loading dimensions of the false bottom of the pan are 0.9 m x 1.9 m.

A second, smaller burn pan, designed for use with mortar training units, was also demonstrated. The smaller size of the unit allows easier movement and is built to accept the smaller charges encountered during mortar unit training. The mortar unit training system burn pan is designed for charge loads of <50 kg/burn.

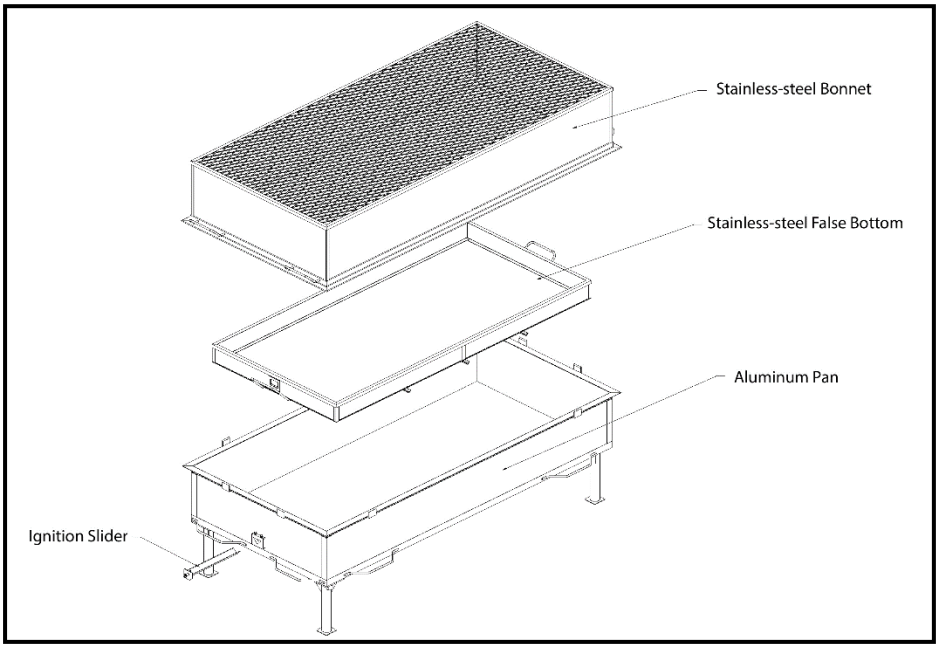

Figure 2. Assembly Drawing of the Howitzer Training System Burn Pan

The burn pan system was developed over a 10-year period. High energetics and heavy metal residues were found around a fixed burn pat on Ft. Greely (now Donnelly Training Area), Alaska (AK), when the area around the pan was characterized under work sponsored by the US Army Alaska. **[12].** That finding led to characterizing expedient field burning of propellants following mortar unit training exercises in Alaska during SERDP Project ER-1481 research on firing point contamination from 2006 through 2008. In 2010, a portable burn pan was constructed and tested at the Defense Research and Development Canada's test range in Valcartier, Quebec (QC) **[2] [13].** Based on these tests and ongoing development work by DRDC on a fixed-location propellant burn pan, modifications were made to the portable pan designed and a second prototype has been built and tested in Alaska in 2011 under ER-1481 **[2].**

ESTCP funded further development and demonstration of the portable burn pan concept in 2013, three tests and demonstrations were conducted through 2015. Improvements included an ignition slider for safer initiation, containment sides for the false bottom, improved handles for moving the pan, and a drain plug for cleaning out the pan. A final design was completed and a system built for an outside customer the end of 2015 **(Table 2)**.

The primary use for the portable propellant burn pan is to enable a safe, environmentally responsible means for conducting excess propellant burn training during artillery training. Because of the robust design of the device, other energetic materials may be addressed in the pan, such as small masses of explosive filler, pyrotechnic devices, or simulators, but these items have not been tested in the pan.

Table 2. Chronology of the Development, Testing, and Demonstration of the CRREL Portable Propellant Burn Pan Training Device.

Year	Activity	Outcome	Publications
Pre-ESTCP Research and Development			
2006	Test burn on snow of mortar propellant	Documented high residues mass following burn	**[14]**
2007	Characterization of a Canadian Open burn/open detonation (OB/OD) range	Discovery of significant quantities of propellant grains from improper disposal	**[15]**
2008	Characterization of burn points Mortar propellant charge burn test on snow. Test burn of 105-millimeter (mm) propellant charge bags on clean sand. Canada starts fixed burn pan development	Very high concentrations. Propellant grains recovered from burn location next spring. Lower but still significant propellant residues remaining.	**[2] [12] [16]**
2009	Burn test on soil: Triple-base howitzer propellant (Canada) Canadian tests initial burn pan designs US Starts burn pan development	Finding of variability in propellant burn efficiencies. First Canadian burn pan designs and revisions.	**[1] [17]**
2010	Canadian fixed pan and US portable pan tests in Canada	Successful tests. Design improvements initiated in both countries.	**[12] [13] [18]**
2011	Continued revision and testing of burn pan designs	Continued improvements in design and performance	
2012	Canada finalizes design. DRDC writes up Standard Operating Procedure (SOP) for pan use.	Implementation of burn pan in Canadian	
ESTCP Project Development			
2013	Full-sized burn pan redesign, test, and demonstration. Work with ARNGB on burn pan BMP guidance	Highly successful test. Draft ARNG BMP on burning excess propellant training.	**[19]**
2014	Smaller Mortar Unit Training System burn pan (MUTS) burn pan design, test, and demonstration. Redesign of burn pans.	Highly successful test.	**[20] [21]**
2015	Redesigned full-sized burn pan test and demonstration. Final burn pan revisions.	Highly successful test. Burn pan design completed.	**[22]**

2.2 ADVANTAGES AND LIMITATIONS OF THE TECHNOLOGY

The primary benefit to the DoD will be a significant reduction in propellant residues on training ranges through the controlled expedient field disposal of excess propellant charges **(Fig. 3).** Because the pan is a training device and not a fixed disposal facility, it has the added benefit of not coming under restrictive environmental regulations.

The advantage of the portable burn pan centers on two primary areas. The first is troop training. The use of the pan will allow units that are training with indirect-fire munitions to burn excess propellant charges at their firing points. This is very important because excess propellant disposal is part of combat operations. Training on this activity is limited by several factors. Many ranges simply do not allow the burning of propellants on the ground because of the potential contamination risk and the previously uncontrolled nature of these burns. Several National Guard facilities now have propellant compounds detected in surface waters. Local regulations also require the transportation of excess charges to remote burn facilities, which results in the absence of soldiers from the training site. When the burns at these central sites occur, only a limited number of soldiers are able to participate, if they are allowed to participate at all. By having a portable burn pan accessible at the training site, training on the burning of excess charges is more efficient, straightforward, and opens up a valuable training opportunity to more of the troops. There was never any problem during ER-201323 enlisting volunteers to take part in the tests and demonstrations conducted during joint exercises with training units.

Figure 3. Post-disposal Propellant Found on Range

The second major benefit is the reduced environmental impact of the training activity. Uncontrolled burns on the ground at firing points or unsupervised burns at fixed burn pan sites have resulted in significant contamination of the soils in these areas. Unburned propellant and heavy metal residues were found to be extremely high (>5,200 parts per million [ppm]) at one fixed burn pan site and unburned propellant approaching 20% of the original mass was found following a winter burn at an open burn site near a firing point **[12].** With the use of the portable burn pan, residues are greatly reduced, in some instances to undetectable levels on the soil surrounding the pan.

The only disadvantage that comes to mind is the limited capacity of the portable burn pans and the size of the burn. Although 50, 90, or even 120 Kg of propellant per burn may sound like a lot, a field exercise may involve 18 guns or more. Over a thousand kg's of excess propellant may result from an extended training exercise. I spoke to an artillery battalion commander about this and he said it would not be a particular problem if burns occurred at the end of each firing mission throughout the training.

He also thought it would be an opportunity for more of his artillerymen to train on burning propellant **(Fig. 4).**

Figure 4. Prototype Burn Pan Developed under SERDP ER-1481 in Use During Training

Page Intentionally Left Blank

3.0 PERFORMANCE OBJECTIVES

The performance objectives are designed to obtain a quantitative assessment of both the effectiveness of the portable burn pan as well as factors that will affect its ease of use. A detailed description of each quantitative performance objective, its data requirements, and the success criteria follows. Qualitative performance objectives are based on impressions rather than data but are as important in having the system accepted and put into use.

The objectives and results that follow concentrate primarily on the full size pan, which is the system that is described in the ESTCP Statement of Work and Demonstration Plans for Project ER-201323. Because of the exceptional performance of the first burn pan designed and tested for ER-201323, we designed and built a smaller burn pan system specifically for use with mortar training. This system had as design objectives a 50 kg mass burn capacity, the same reduction of mass of charges (combustible mass) and energetics, a mass goal of 80 kg with component weights not to exceed 50 kg each, and <10% of lead outside the pan following a propellant burn. The qualitative objectives are the same as for the full-size (howitzer) burn pan system. The success criteria as well as the results for the mortar training system will be enumerated in the text following **Table 3**.

Table 3. Performance Objectives

Performance Objective	Data Requirements	Success Criteria	Results
Quantitative Performance Objectives			
Burn capacity	Pre-test weighing of charges	120 kg total mass of charges	Able to burn up to 120 kg. Recommend 90 kg.
Reduction in mass of charges	Pre- and post-burn mass of test material	99.9% reduction in combustible mass	99.98% mass reduction
Reduction in mass of energetics	Analysis of pre-and post-burn samples collected outside of pan for Contaminants of Concern (COC)	<0.01% of original energetics mass recovered outside of pan	No significant difference in soil COC concentrations following burns
System mass	Weighing of components	<130 kg total mass <70 kg/component	119.3 kg total mass <43.2 kg /component
Containment of heavy metals	Mass of lead outside burn pan	<10% of total mass	Unable to obtain data: No lead in charges
Quick turnaround	Temperature of residues	<100°C above ambient w/in 15 minutes of burn	Turnaround time of 12 minutes (load to load)
Qualitative Performance Objectives			
Integration of burn pan into training	Feedback from troop field commander	Acceptance of concept of burning in the pan	All feedback positive
Ease of use	Feedback from troops on usability and time required	Ability of troops to effectively utilize the technology	Self-reliant after one burn
Environmental and Range Control acceptance	Feedback from installation Environmental Office and Range Control	Understanding the benefits of the system and willingness to mandate its use	Achieved at all sites. Requests for additional pans from all sites.

3.1 BURN CAPACITY (QUANTITATIVE)

Burn capacity is the mass of propellant charges that can be safely and effectively burned in a single event. Efficiency is based upon the reduction of the combustible mass, the mass of contaminants of concern (energetics and metals) recovered outside the structure, and the turnaround time between burns. These factors are listed as additional performance objectives below.

The burn capacity criteria for the standard howitzer unit training system (120 kg) was met. We recommend that the maximum propellant load used be subjected to the environmental and climatic conditions, as these conditions may require smaller loads per burns to avoid collateral effects such as grass fires. One spot-weld on the bonnet failed during the demonstration of the burn pan. The observer from the Range office assessed the failure as minor and easily repairable using in-house assets.

The amount of propellant available for testing the smaller mortar system (16 kg) did not allow us to test at the design load of 50 kg. At 16 kg, the mortar system pan experienced no structural failure.

3.2 REDUCTION IN THE COMBUSTIBLE MASS OF CHARGES (QUANTITATIVE)

Charge mass reduction is a measure of the decrease in mass of the combustible portion of the propellant charge. This mass includes the charge bag, energetics, and the combustible non-energetic components of the propellant charge. Not included are metals and such non-combustible charge components such as flash suppressants. The majority of this mass will be contained within the burn pan. The mass in the pan was measured to determine the mass reduction from the burn. The initial residues were collected, separated according to type (bag fragments, propellant grains, and ash), and re-burned to determine residual combustible mass from the various residues components.

The performance objective for the burn pans was a 99.9% reduction in combustible materials. The average mass reduction for the burn pans developed under ER-201323 was 99.96% (99.92% to 99.98%). The criteria were successfully met for all tests and systems.

3.3 REDUCTION IN THE MASS OF ENERGETICS (QUANTITATIVE)

Energetics mass reduction is a measure of the decrease in mass of the energetic compounds in the propellant charges. This mass was measured outside the pan, as the most important component of the residues, this is what is deposited in the environment as a result of a disposal action. Energetics contained within the pan were subjected to subsequent burns and controlled disposal when the ash is collected during periodic maintenance of the unit. The mass of energetics ejected from the pan was collected using replicate multi-increment sampling (MIS) from the ground, snow surrounding the pan or collected from trays placed around the pan to reduce measurement error **[23] [24] [25].** We also measured the mass of the propellants and the mass of energetic compounds recovered from within the burn pan before and after the secondary burn. Analyses were conducted using high-performance liquid chromatography – ultraviolet detector and standard methods for NG and DNTs **[26].**

Because of the very low mass of ejected energetics, we were not able to discern any difference between pre-burn and post-burn soil concentrations of the analytes of interest. For tests conducted previous to ER-201323 on snow, we could detect an increase in the concentration (and mass) of the analytes, but they were well below the target criteria **(Fig. 5).** The criteria were thus successfully met for all systems and all tests.

Figure 5. Yellow Post-burn Residues on Snow Adjacent to Burn Pan (65-kg burn test)

3.4 UNIT MASS (QUANTITATIVE)

The mass of the burn pan unit is an important factor in the determination of the ease of use. The pan should be easily maneuvered by no more than four personnel. The bonnet should be easily handled by two personnel to reduce the number of laborers involved in the loading and lighting of the propellants in the burn pan. Each component was massed separately to obtain component masses and the whole system was assembled to determine the unit mass also to verify the component masses. A set of piezoelectric sensors with a resolution of ±0.1 grams (g) was used to obtain the data.

The final mass of the howitzer system is 119.3 kg and of the mortar system is 79.3 kg. Component weights for the howitzer system do not exceed 44 kg and for the mortar system all components weigh <30 kg. All criteria was successfully met for both systems.

3.5 CONTAINMENT OF HEAVY METALS (QUANTITATIVE)

Heavy metals (lead) are used in some propellant charges to remove copper contained in the rotating bands of the projectiles from the rifling of the weapon barrel. This material is found in thin lead strips within one or more propellant charges. If these charges are excessed and burned, the lead can be ejected from the pan during the burn or aerosolized and carried outside the pan by the burn plume, to be deposited in the vicinity of the pan **(Fig. 6).** These fine lead particles then become an inhalation hazard in the dust kicked up around the pan or are relatively quickly transported into the groundwater.

Only the lead ejected from the pan poses an immediate and long-term hazard, as the remainder is contained in the pan as either larger, non-transportable particles or bound in the ash residues. The mass of lead ejected from the pan should be collected using replicate MIS from the ground or snow surrounding the pan or collected from trays placed around the pan. Completion of this task requires access to propellant charges containing lead, which is not common during training exercises.

None of the tests with the three different pans used propellant charges containing lead foil, the greatest source of heavy metals. Lead in the form of lead carbonate ($PbCO_3$) was a component of the propellant grains for the M1 propellant burned during the demonstration at Delta Junction, Alaska. We sampled pre- and post-burn soil samples with a Niton and a new Innov-X X-Ray Fluorescence instrument to determine if elevated lead levels could be found in the soil as a result of the burning of over 450 kg of propellant. There was no significant difference (≈20 ppm in both locations). We also checked for lead in the ash residues of the pan. Lead levels were much higher (≈20,000 ppm) within the pan.

Figure 6. Lead from the Decoppering Foil in Propellant Charge Following Burn Events

Lead foil remnants with a partially burned charge bag on soil near a fixed burn pan, lead foil with propellant grains on the ground adjacent to a fixed burn pan, and fine lead particles on the 3-mm steel open-mesh grate of a prototype portable burn pan following a 120-kg test burn.

These data are subject to interpretation. The low levels found outside the pan made discerning any significant difference impractical. There was much data overlap between the six pre- and post-demonstration samples. The elevated lead levels within the pan were an interesting find and may help explain the very high lead concentrations detected in soils around fixed burn pans. The data for the residues within the burn pan are qualitative as the medium sampled was ash rather than soil. Ash samples are to be analyzed on an Inductively-Coupled Plasma instrument.

3.6 QUICK TURNAROUND (QUANTITATIVE)

Quick turnaround, the ability to reload the pan with propellant charges after a burn, is essential for the efficient use of the burn pan. Intensive training missions or missions with larger-caliber weapon systems may generate excess propellant in quantities exceeding the safe loading capacity of the pan.

If this occurs, multiple burns will be required. Reloading of the pan can only take place when the pan has sufficiently cooled to allow placement of the charges without accidental ignition. To determine the temperature of the pan and residues, thermocouples were placed in strategic locations on the pan and an infrared (IR) scanner was used to determine the temperature of the residues. Elapsed time commenced at the determination of safe access to the burn pan.

Initial data (first two tests) was piecemeal as we tracked times for separate activities associated with a training exercise. For the demonstration, we had six burns and were able to derive contiguous burn times. For the artillery pan, the turnaround time was 12 minutes. For the mortar pan, the turnaround time was five minutes. Both units successfully met the performance criteria.

3.7 INTEGRATION OF BURN PAN INTO TRAINING (QUALITATIVE)

Training unit commanders were queried before and after test burns to determine if they felt that the burn pan could be integrated into their training regimen. All three commanders not only appreciated the opportunity to have a burn pan on site with which they could train their soldiers on burning of excess propellants, they also requested a burn pan for their units. This does not imply that all commanders will embrace the burn pan. One artillery commander at a test prior to the ESTCP project was very upset with the presence of the burn pan at his training site and refused to allow his soldiers to participate in the test. However, his replacement was the commander of the training unit that assisted us during the demonstration. He was enthusiastic about the pan as was his commanding sergeant major and the deputy commander. He requested that we leave the pan at the site so his troops could continue training on it until their exercise ended. All the commanders provided valuable feedback at the end of the exercise. One requested that we build a burn pan for his unit so he could use it on all training exercises.

3.8 EASE OF USE (QUALITATIVE)

Operation of the pan is quite straightforward. None of the artillerymen who assisted us with the tests and demonstration had any problems grasping the concepts or operation of the burn pan. We never lacked for volunteers to assist us, not only with the pan but also with the baseline soil sampling. The troops were very attentive and helped in whatever way they could. They also provided very valuable feedback on the pan and its operation, an indication of their interest and enthusiasm for the burn pan system. It helped that they got to torch up to 120 kg of propellant, which was quite an experience for them.

3.9 ENVIRONMENTAL AND RANGE CONTROL ACCEPTANCE (QUALITATIVE)

The Environmental Officers of the facilities at which we conducted the tests requested the initial two tests. The demonstration was conducted at the request of the Range Officer. In all three activities, both Range and Environmental were enthusiastic supporters and embraced the concept of a portable burn pan for unit training. At Camp Grayling, Michigan (MI), the Range Officer cancelled a contract for a centralized fixed burn pan facility, preferring to integrate the portable burn pan into the facilities standard operating procedure. All facilities requested the test pans remain at their facilities as well as additional burn pans. Donnelly Training Area Range ordered two with an option of an additional unit.

Page Intentionally Left Blank

4.0 SITE DESCRIPTION

Three sites were chosen to conduct tests and the demonstration. The first location was Camp Grayling, Michigan (MI), an ARNG in the northern part of Lower MI. The second was Fort Indiantown Gap (FIG), Pennsylvania (PA), located in southeastern PA. The third was DTA, AK, located on the former Fort Greely near Delta Junction in central AK. The demonstration took place at DTA.

4.1 SITE LOCATION AND HISTORY

4.1.1 Camp Grayling, Michigan:

The location of the first test of a prototype burn pan under ER-201323 was Camp Grayling, MI. Camp Grayling is the largest ARNG training facilities. This facility allows ARNG troops to train with both mortars and howitzers. Arrangements were made with Mr. John Hunt, Environmental Manager at Camp Grayling (CGMI), to conduct a test on his post. The 1/134th Ohio ARNG volunteered to participate in the tests. Coordination was through 1SG Scott Zaebst and CPT Patrick Rippeth. Planning and coordination went smoothly.

4.1.2 Fort Indiantown Gap, Pennsylvania

The location of the second test of a prototype burn pan under ER-201323 was FIGap, PA. FIG is a large ARNG training facilities that has ranges for ARNG troops to train with both mortars and howitzers. Arrangements were made with Ms. Jo Anderson, Environmental Project Manager at FIG, to conduct a test on her post. The 1/110th PA ARNG volunteered to participate in the tests. Coordination was through MSG Rom Maraffi and CPT Lawrence Fagan of the 110th and LTC Jim Fluck, Range Commander at FIG. Planning went smoothly although coordination with the training unit during the burn was somewhat erratic.

4.1.3 Donnelly Training Area, Alaska

The location of the demonstration of the final design of the burn pan under ER-201323 was the DTA on the former Fort Greely, AK (**Fig. 7**). At around 275,000 Hectares (ha), DTA is one of the largest Army training facilities in the US with many indirect-fire ranges. Arrangements were made for conducting the burn pan test at DTA with Mr. Steve Thurmond, the USARAK Range Manger for DTA. Mr. Joe Clark of Range Control assisted us in the field. The 2/377th PFAR, Joint Base Elmendorf-Richardson (JBER), agreed to train on the burn pan with excess propellant from their concurrent training exercise. Coordination with the training unit was through SSG Emmanuel Rodelo and CPT Liuzzu. Planning and coordination went smoothly.

4.2 SITE GEOLOGY/HYDROGEOLOGY

4.2.1 CGMI

Firing Point 301 on the north side of CGMI was the location at which the artillery unit was training generating the excess propellant was training. The firing point is a sandy, sparsely vegetated open area with low discontinuous grass **(Fig. 8)**. Recent rains had moistened the soil, making it cohesive. Geology of the site had no effect on the test design or the test.

No standing water was present at the site, even after a hard rain. The presence of standing water was the only hydrological concern for the test design and the tests.

4.2.2 FIG

Firing Point 1-10 on the north side of FIG was the location chose for the test burn. The firing point is an open area composed of packed coarse gravel with sparse vegetation consisting of mostly low discontinuous grass **(Fig. 9).** There was no rain forecast and no standing water in the area of the test.

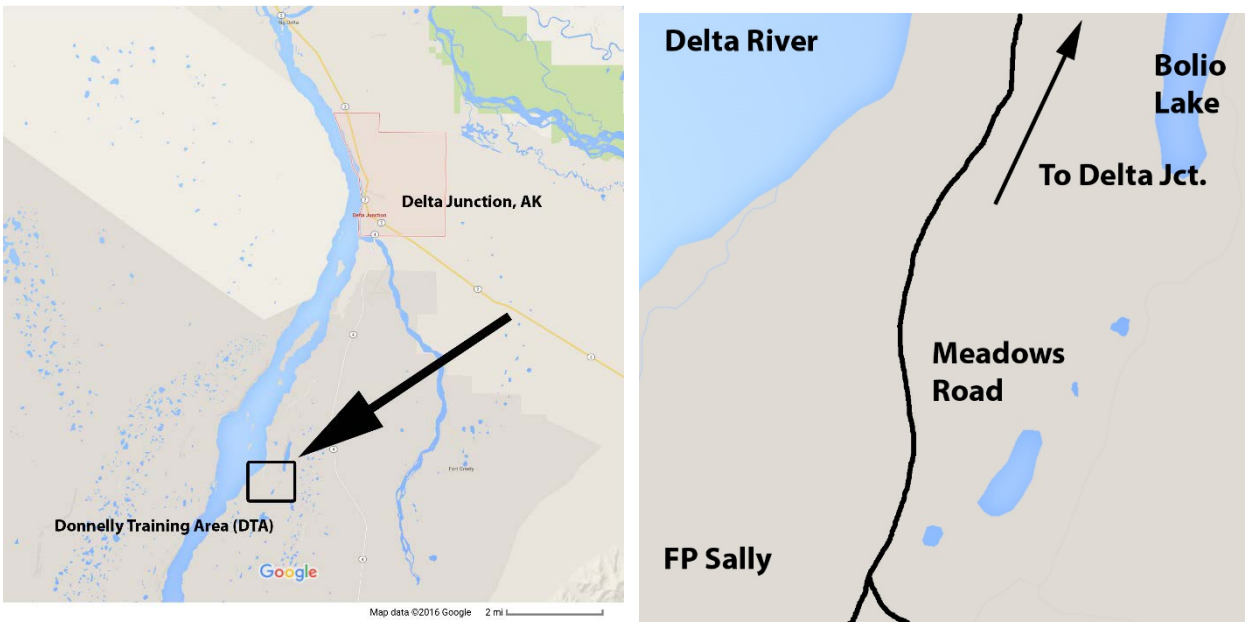

Figure 7. Firing Point Sally, Donnelly Training Area, AK, site of ER-201323 Demonstration

4.2.3 DTA

Firing Point Sally on the north side of DTA was the location at which the artillery unit that generated the excess propellant for the demonstration was training The firing point is an open vegetated area with a ground cover of grasses, sedges, low forbs, and some low shrubs. Soils are fine-grained silt loam overlying coarser, poorly sorted gravel **(Fig. 10).** Topography is relatively flat with some rolling areas. Geology of the site had no effect on the test design or the test. No standing water was present at the site, even after a hard rain.

Figure 8. Firing Point 301, CGMI, with Burn Pan on Site

Figure 9. Firing Point F-1-10, FIG, Before Placement of Burn Pan (rt.)

Figure 10. Firing Point Sally, DTA, with Burn Pan on Site

4.3 CONTAMINANT DISTRIBUTION

For all test locations, a location was chosen for the burn pan at least 100 m downwind of the artillery firing positions. At FIG and DTA, the burn points were located on adjacent ranges. Baseline soil samples were taken to characterize the site for propellant residues prior to the test burns. An area 6 m in diameter was sampled in triplicate with the CRREL multi-increment sampling tool (C-MIST) using a 3-Centimeters (cm) coring bit set for a 2.5-cm depth **[23].** Sampling methods are discussed in Section 5.5. An additional area from 3 to 6 m from the pan location center point (6 – 12 m diameter) was also sampled in the same manner. These areas were resampled in triplicate following the burn to determine propellant residues surface deposition. The diameters chosen for sampling were based on previous experience utilizing prototype burn pans. Baseline data for the three sites can be found in **Table 4**. Data for the fixed burn pan at OP-7 on DTA is given as a reference.

Table 4. Baseline Energetics Residue Data for Burn Points

Site	DNT (mg/kg)	NG (mg/kg)	Lead (mg/kg)	Reference
CGMI				[19]
0 – 3 m	1.8	—[3]	—[2]	
3 – 6 m	0.95	—[3]	—[2]	
FIG				[20]
0 – 3 m	0.95	2.0	—[2]	
3 – 6 m	0.84	2.2	—[2]	
DTA				[22]
0 – 3 m	4.8	—[3]	21.	
3 – 6 m	4.5	—[3]	16.	
CGMI Fixed Pan	48.	—[1]	5100.	[3] [4]
OP-7 Fixed Pan	35.	6.4	5100.	[1] [2] [27]

[1] Not reported
[2] Not an analyte of interest for these tests (no lead foil in charges)
[3] Below analytical instrumentation detection limits

5.0 TEST DESIGN

Testing of the portable burn pan took place on three active military installations on which indirect-fire training was taking place. Tests were conducted through the installation Environmental Resources Manager or the Range Manager and in association with troops training in the field. The troops were tasked by the officer in charge to conduct the actual test and demonstration burns under the guidance of the project PI (Walsh). Excess propellant bags generated during the troop training exercise were used for the burns.

5.1 CONCEPTUAL EXPERIMENTAL DESIGN

The basic performance of burn pan was measured based on the percentage of analytic mass recovered from outside the pan following the propellant charge burn. Troops from an artillery training unit conducted all tasks associated with training of the burn pan. Technical staff from CRREL weighed and characterized the propellant charges, obtained and analyzed the pre-and post-burn soil samples, collected and analyzed the post-burn residues within the pan. Also measured the mass of the system with input from the training unit, Range personnel, and Environmental participants assessed the operational use of the system.

5.2 BASELINE CHARACTERIZATION

The basic performance of burn pan was measured based on the percentage of analytic mass recovered from outside the pan following the propellant charge burn. Troops from an artillery training unit conducted the burns as part of their expedient field burning of propellant training while technical staff from CRREL weighed and characterized the propellant charges. Also obtained and analyzed the pre-and post-burn soil samples, collected and analyzed the post-burn residues within the pan, and measured the mass and operational use of the system.

Soil sampling was conducted using the MIS method. The baseline samples were taken from a 0- to 3-m and 3- to 6-m annulus surrounding the burn pan using the C-MIST (See Section 4.3) **[23]**. Samples in these two zones were collected in triplicate. Sample increments were 2-cm in diameter by 2.5-cm deep. A minimum of 40 increments were taken from each Sampling Units (SU) to construct a sample. Samples were analyzed using EPA Method 8330b, developed at CRREL **[26].**

5.3 TREATABILITY OR LABORATORY STUDY RESULTS

Initial research on the topic of contamination from the burning of excess gun propellant was conducted as part of SERDP project ER-1481 **[1] [16].** These studies included sampling of a fixed burn pan in longtime use **[27]** and evaluating the performance of two portable burn pans constructed to determine the ability of a purpose-designed piece of training equipment to contain energetics and metals **[2] [13].** These studies indicated that current practices of burning of excess propellant on the ground, especially when the ground is covered with snow, will result in significant (%-level) deposition of energetics **[16]**; that the current burn pan design used in the US is inadequate for the efficient disposal of propellants **[3] [27];** and that a properly designed portable burn pan will significantly improve both the burn efficiency and containment of energetics **[2] [13]**.

Canadian researchers at DRDC, following a parallel track to US research at CRREL, were the first to substantially prove that a purpose-built propellant burn pan is capable of both clean, efficient disposal of excess propellants as well as the containment of heavy metals and energetic residues **[13]**. These studies were the basis for ESTCP Project ER-201323.

5.4 FIELD TESTING

The burn pan technology had been tested on two occasions prior to the start of ER-201323. The objectives of this project required the completion of the development of the pan and demonstrating its capabilities to potential users. Each iteration of the design needed to be tested in the field to determine if the performance objectives (**Table 3**) were being met. An important part of the field-testing was obtaining feedback from the users, which was used to optimize the design of the pan.

Three portable burn pans were designed, built, and tested as part of the project. The first pan was a full-size pan, an iteration of the previous two pans, designed to be a general purpose pan capable of handling propellant burns from all types of training up to howitzer battalion operations, the Howitzer Unit Training System burn pan (HUTS). The interior dimensions of the false bottom of this pan, the area where the charges are loaded for burning, measures 0.9 m x 1.9 m. The success of the first test allowed us to design, build, and test a smaller (MUTS, which incorporated the design improvements derived from the testing of the previous pan into a smaller, a more easily handled unit. This burn pan measured 0.9 m x 1.0 m inside the false bottom. The third prototype was built using lessons learned from the previous two tests. This prototype was demonstrated to assess the performance of the pan with respect to the objectives outlined in **Section 3** to determine the maturity of the technology. Only minor changes based on performance and user feedback were made to the final design, which was completed at CRREL.

No decommissioning or site remediation was required following the tests. All waste material (ash) was removed from the pans and returned to CRREL for analysis to determine if the performance objectives for combustible mass and energetic compound reduction were met.

The following Gantt chart (**Table 5**) depicts the flow of the project. The testing process was designed to allow for building of improvements into the design of the pan over time. Significant improvements were made over the course of the tests. The design was refined and made more user-friendly throughout the process.

5.5 SAMPLING METHODS

Sampling took place in two general areas: Inside the pan and outside the pan. The objective of taking samples outside the pan was to determine the increase in mass of analytes (NG, DNT, Pb) on the ground resulting from a propellant burn. Those taken from inside the pan were used to determine mass reduction, unburned combustibles mass, and energetics mass in the final ash.

Table 6 presents an overview of the sampling plan for the prototype testing and the final demonstration of the technology. Sampling was the same for all three of the tests with the exception of the lead work, which was done only for the demonstration in Alaska. The analytical methods used are presented in **Table 7**. All samples were processed and prepared for analysis at the analytical laboratory at CRREL. Energetics and handheld-characterization for lead (Niton and Innova XRF instruments) analyses were conducted at CRREL **[29].**

Table 5. Gantt Chart for Execution of ESTCP Project ER-201323

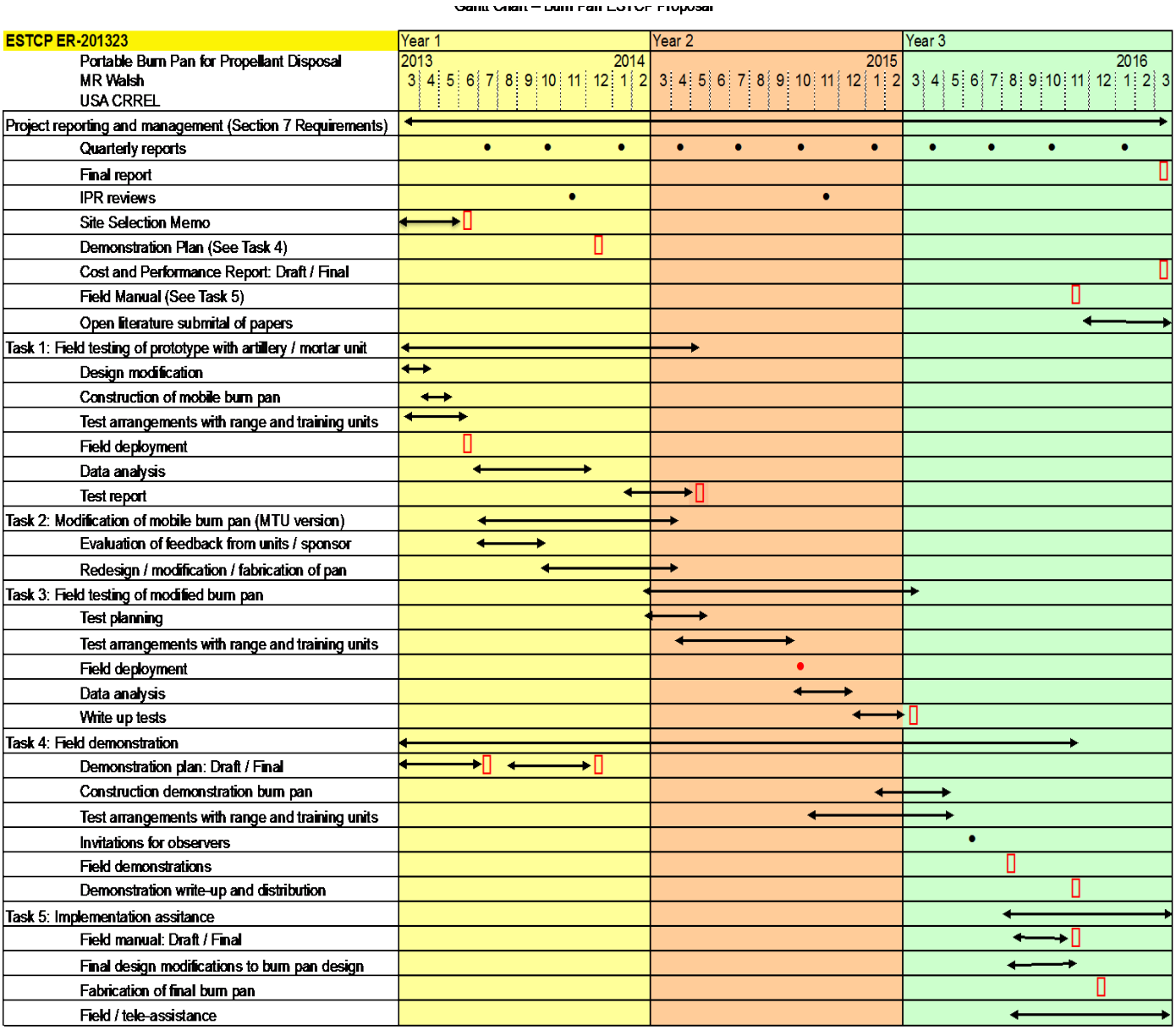

Samples from outside the pan (external soil samples) were collected from two annuli surrounding the burn pan: 0 - 3 m and 3 - 6 m. We collected all the soil samples using the MIS technique. The samples were composed of at least 40 increments. The increment size was 2-cm ø by 2.5-cm deep. Samples were ground and subsampled in accordance with EPA Method 8330B to ensure the samples were representativeness of the samples and reproducibility of the data **[26] [30] [31] [32].**

Table 6. Total Number and Types of Samples Collected for Project Demonstration

Component	Matrix	Number of Samples	Analyte	Location
Pre-burn (baseline) sampling	Soil	3 Replicates[1] 44 Increments Ea. (Mean)	2,4-DNT 2,6-DNT NG	0 – 3 m from pan
		3 Replicates[1] 66 Increments Ea. (Mean)		3 – 6 m from pan
		6[2]	Lead	Using material from energetics samples
Technology performance sampling	Burn residue (Ash)	2[3]	2,4-DNT 2,6-DNT NG	One from pan One from false bottom
		7	Lead	False bottom
Post-demonstration sampling	Soil	3 Replicates[1] 55 Increments Ea. (Mean)	2,4-DNT 2,6-DNT NG	0 – 3 m from pan
		3 Replicates[1] 61 Increments Ea. (Mean)		3 – 6 m from pan
		6[2]	Lead	Using material from energetics samples

[1] Multi-increment samples. Each increment approximately 3-cm ø by 2-cm deep.

[2] X-ray Florescence (XRF) scan of each processed replicate soil sample

[3] Whole-population (bulk) samples from the stainless steel false bottom and the bottom of the aluminum pan

Table 7. Analytical Methods for Sample Analysis

Matrix	Analyte	Method	Container	Preservative[4]	Holding Time
Soil or ash (burn residues)	2,4-DNT	8330B[1]	Pre-cleaned Polyethylene bag[1]	None. Keep cool until air dried and processed	>28 days[5]
	NG	8330B			
	2,6-DNT	8330B			
Soil	Pb	Niton-XRF[2]			Stable
Ash	Pb	Innov- XRF			
		6020A			

[1] **Ref [26]**

[2] **Ref [29]**

[3] Lab-grade bags

[4] Preservatives are not required for these samples. Energetics samples will be kept refrigerated.

[5] If air-dried and cool

5.6 SAMPLING RESULTS

Results will be presented in the sequence in which the three tests were conducted. Data for both the soil samples (outside the pan) and the ash (within the pan) are presented. Other results for the tests that pertain to the performance objectives are given in Section 6.0.

5.6.1 Camp Grayling, MI: 10 June 2013

The table below (**Table 8**) contains the results for the pre- and post-test soil sample analyses. The test material was M1 artillery propellant, a single-base propellant containing 10±2% DNT. A total of 91 kg of Charge 6 and Charge 7 were burned in the single test for which measurements were made. The original mass of DNT in the charges burned was approximately 9 kg. There was no lead foil in the burn, so the samples were not analyzed for Pb. Results from a Wilcoxon-Mann-Whitney Rank Sum Test analysis of the data sets indicates that there is no statistical difference between the pre- and post-burn soil sample results for the analyte DNT. There is also no statistical difference between the pre- and post-burn data sets for the two sampled annuli.

Table 8. Analytical Results for Pre- and Post-Burn Soil Samples (mg/kg): CGMI

Samples	Analyte	Rep	Increments (0 – 3 m)	Sample Mass (g)	0 – 3 m (mg/kg)	Increments (3 – 6 m)	Sample Mass (g)	3 – 6 m (mg/kg)
Pre-burn (Baseline)	DNT	1	35	870	0.26	52	1400	0.62
		2	35	840	1.2	52	1400	1.3
		3	35	850	3.9	52	1500	0.92
		Mean	35	850	1.8	52	1400	0.95
Post-burn (Baseline)	DNT	1	38	1000	2.7	58	1400	0.19
		2	38	970	0.38	58	1400	0.15
		3	38	980	1.7	58	1400	1.7
		Mean	38	990	1.6	58	1400	0.68

The residues from the burn pan was analyzed for DNT content (2,4- and 2,6-DNT: **Table 9**). The final mass of DNT in the residues was 1.5 g, or <0.02% of the original 9 kg mass of DNT for the burn. There is no performance goal for DNT in the pan residues. The final bulk volume of the residues was <1 liter. DNT makes up about 0.6% of the total remaining mass of the burned charges, well below the 10% waste stream contaminant trigger point for Resource Conservation and Recovery Act (RCRA) designation.

Table 9. Analytical Results for Post-Burn Pan Residues Sample: CGMI

Samples	Residue Mass (g)	2,4-DNT Mass (g)	2,6-DNT Mass (g)	DNT Percent of Residue Mass[3]
Ash	180	1.4	0.057	0.83%
Propellant[1]	75	0.021	0.0012	0.03%
Bag[2]	15	0.0046	0.0004	0.03%
Total	270	1.4	0.059	0.55%

[1] Unburned grains of M1 propellant

[2] Combustible remnants of charge bags (It was raining during burn)

[3] Mass of DNT as a percent of sampled material

5.6.2 Fort Indiantown Gap, PA: 19 October, 2014

The test material was a mix of mortar propellant charges, mostly containing M38 propellant, a single-base propellant. A total of 16 kg of propellant charges were burned in the single test. The specifications for the M38 propellant do not include NG or any DNTs for the manufactured product **[33].** However, reworked propellant may contain up to 2% by mass NG and up to 1% by mass DNT. The table below **(Table 10)** contains the results for the pre- and post-test soil sample analyses. The data show that there was no significant increase in NG concentration in the soil surrounding the burn pan in either the 0-3 m annulus or the 3-6 m annulus surrounding the pan following the test. There is also no significant difference in DNT concentrations before and after the test burn. The presence of NG in the post-burn ash recovered from the pan indicates that reworked propellant was included in the charge bags burned.

Table 10. Analytical Results for Pre- and Post-Burn Soil Samples (mg/kg): FIG

Samples	Analyte	Rep	Increments (0 – 3 m)	Sample Mass (g)	0 – 3 m (mg/kg)	Increments (3 – 6 m)	Sample Mass (g)	3 – 6 m (mg/kg)
Pre-burn (Baseline)	DNT	1	40	830	0.65	49	840	0.76
		2	40	900	1.2	44	950	0.85
		3	40	890	1.0	41	910	0.91
		Mean	40	870	0.95	45	900	0.84
	NG	1	40	830	1.9	49	840	10.
		2	40	900	1.6	44	950	0.78
		3	40	890	2.4	41	910	1.3
		Mean	40	870	2.0	45	900	4.0
Post-burn (Baseline)	DNT	1	41	840	0.95	49	1000	10.
		2	40	950	0.85	44	950	0.78
		3	41	910	0.56	52	1200	1.3
		Mean	41	900	0.79	48	1100	4.0
	NG	1	41	840	3.3	49	1000	2.6
		2	40	950	3.2	44	950	2.6
		3	41	910	2.1	52	1200	2.2
		Mean	41	900	2.9	48	1100	2.5

The residues from the burn pan were brought to the analytical lab for analysis (**Table 11**). The total mass of NG and DNT in the original combined charges is not known, as we did not return any unburned propellant grains for analysis. The lack of detectable DNT in the residues indicates that no DNT was in the reworked propellant. This was confirmed with a more sensitive analytical instrument, an HP Agilent 7890A gas chromatograph with an electron capture detector. Using the 2% value as a maximum, there may have been up to 320 g of NG in the propellant charges. If this were the case, then the burn efficiency for NG it would have been around 99.998%. The actual efficiency was likely lower, but we have no way to determine it. Because of the small mass of residues, we did not break out the initial components as we did with the CGMI samples **(Table 9).**

Table 11. Analytical Results for Post-Burn Pan Residues Sample: FIG

Samples	Residue Mass (g)	DNT Mass (g)	NG Mass (g)	NG Percent of Residue Mass[2]
False Bottom	30	BDL[1]	0.0035	0.011%
Pan (Base)	3.5	BDL	0.00078	0.022%
Total	34	—	0.0043	0.012%

[1] Analytical results were below detection limits (BDL) for both 2,4- and 2,6-DNT

[2] Mass of NG as a percent of sampled material

5.6.3 Donnelly Training Area, AK: 14 August 2015

The test material was M1 artillery propellant, a single-base propellant containing 10±2% DNT. A total of 458 kg of propellant charges 6 and 7 were burned in a series of six tests. The original mass of DNT in the charges burned was approximately 41 kg. There was no lead foil in the burn, but $PbCO_3$ makes up 1% of some M1 formulations. Lead makes up about 89% of the $PbCO_3$, so there was a total of about 4 kg of Pb in the burns. We analyzed both the soil and the pan residues for Pb.

Soil samples were analyzed for both 2, 4- and 2,6-DNT. **Table 12** summarizes the results. The data show that DNT contamination existed at the burn pan location prior to the test (A firing exercise at the location had just wrapped up). There is no significant difference in energetics concentrations in the soil before and after the test burns, with overlap in the pre-and post-burn data. These results are consistent with data from the previous tests with the burn pans on the soil.

Table 12. Analytical Results for Pre- and Post-Burn Soil Samples (mg/kg): DTA

Samples	Analyte	Rep	Increments (0 – 3 m)	Sample Mass (g)	0 – 3 m (mg/kg)	Increments (3 – 6 m)	Sample Mass (g)	3 – 6 m (mg/kg)
Pre-burn (Baseline)	DNT	1	42	690	3.0	76	1400	4.7
		2	44	700	5.5	40	770	3.1
		3	46	760	5.8	81	1700	6.0
		Mean	44	720	4.8	66	1300	4.6
Post-burn (Baseline)	DNT	1	52	790	4.6	81	1700	5.9
		2	59	870	5.8	50	1000	3.1
		3	54	870	3.9	51	990	3.0
		Mean	55	840	4.7	61	1200	4.0

The residues in the burn pan were collected and brought to the CRREL analytical lab for analysis. The amount of DNTs found in the ash is depicted in **Table 13**. The data is presented in three ways: as a total recovered mass, as a percent of the ash remaining in the pan, and as a percent of the estimated mass of DNT in the charges prior to burning. The percent of energetics in the residue mass is important as it has implications for transport and disposal. The 0.33% concentration of DNT in the ash is quite low, allowing transport on public roads (<10% of total transported mass). The percentage of the original mass of DNT remaining in the pan is also quite low, much lower than found after previous burn tests, likely due to the number of burns conducted. There is no ESTCP performance goal for DNT in the pan.

Table 13. Analytical Results for Post-Burn Pan Residues Sample: DTA

Samples	Residue Mass (g)	2,4-DNT Mass (g)	2,6-DNT Mass (g)	DNT Percent of Residues Mass[2]	DNT Percent of Pre-burn Mass[3]
False Bottom	41	0.054	BDL[1]	0.13%	0.0001%
Pan (Base)	58	0.28	0.0023	0.48%	0.0007%
Total	99	0.33	0.0023	0.33%	0.0008%

[1] Analytical results were below detection limits (BDL) for both 2,6-DNT

[2] Mass of NG as a percent of sampled material

3 DNT remaining from original mass of DNT in charges

The samples of the soil surrounding the burn pan did not indicate a consistent increase in the concentration of lead following the burn. Subsamples of all the ground soils were shot with an XRF instrument (Niton 700 series) for lead content. Exposure time for each sample was determined by the stabilization of the standard deviation displayed on the instrument. Minimum recommended analysis time for the instrument is 60 nominal seconds. The detection limit for the Niton 700 is ≈20 ppm for lead. Results are shown in **Table 14**. Pre-burn propellant grains were removed from a Charge 7 propellant bag and shot with the Niton XRF. Readings were below the 20 ppm lead detection limit of the instrument. Only one soil sample indicated a slight elevation in soil lead concentration compared to pre-burn lead concentrations. All samples were well below the EPA recommended exposure level of <400 ppm.

The ash was examined with both the Niton instrument and a newer Innov-X XRF instrument. Results are presented in **Table 15**. The Niton results averaged 14,000 ppm (n=2) and the Innov-X results averaged 22,000 ppm. Both instruments were set up for soil, so the ash measurements are qualitative, indicating a high concentration of lead, but not able to return a true concentration. Samples have been sent out of the lab for further analysis on metals analysis instrumentation.

Table 14. Pb Analytical Results for Soil Samples: DTA

Sample	Reading #	Analysis Time (s)	Pb Conc. (ppm)
RCRA Standard[1]	144	103	480±19
RCRA Standard	147	104	490±19
Pre-test samples			
15FPSally-01	148	88	23±6.4
15FPSally-02	149	151	15±4.7
15FPSally-03	150	88	24±6.6
15FPSally-04	151	97	14±5.9
15FPSally-05	152	98	17±5.8
15FPSally-06	154	83	17±6.5
Means		100	18

Table 14. Pb Analytical Results for Soil Samples: DTA (Continued)

Sample	Reading #	Analysis Time (s)	Pb Conc. (ppm)
Pre-test samples			
15FPSally-07a[2]	148	85	20±6.2
15FPSally-07b	149	88	30±5.9
15FPSally-07c	150	103	28±6.1
15FPSally-08	151	90	15±6.1
15FPSally-09	152	93	23±6.3
15FPSally-10	154	121	18±5.2
15FPSally-11	154	82	19±6.5
15FPSally-12-1[3]	154	105	100±7.8
15FPSally-12-2	154	95	98±8.1
Means[4]		96	20

[1] USEPA Resource Conservation and Recovery Act standard sample (Concentration ≈500 ppm)

[2] Three separate subsamples of 15FPSally-07

[3] Duplicates of the same subsample of 15FPSally-12

[4] Means of samples 15FPSally-07 through -11

Table 15. Pb Analytical Results for Post-Burn Pan Residues Sample: DTA

Sample	Reading #	Analysis Time (s)	Pb Conc. (ppm)
Niton 700 Series			
15FPSally–Ash-1[1]	165	103	14,000±95
15FPSally–Ash-2	166	152	15,000±79
Means		128	14,500
Innov-X XRF			
15FPSally-Ash-a[2]	2	120	17,000±130
15FPSally-Ash-b	3	120	23,000±180
15FPSally-Ash-c	4	120	23,000±180
15FPSally-Ash-d	5	120	23,000±180
Means		120	22,000
15FPSally-Ash-Bulk	6	120	17,000±140

[1] Duplicates of the same subsample of 15FPSally–Ash

[2] Four separate subsamples of 15FPSally–Ash

Page Intentionally Left Blank

6.0 PERFORMANCE ASSESSMENT

The CRREL portable excess propellant burn pan met or exceeded all performance objectives described in the Scope of Work for the project. The only objective that was not fully tested was the retention of lead in the pan from the M1 howitzer propellant Charge 5 lead foil. In all our tests, the Charge 5 module was consumed during training. Performance objectives assessments will be addressed in the order they appeared in **Section 3, Table 3**. The performance objectives were developed for the full-size HUTS pan. The objectives for the smaller MUTS pan were derived from the HUTS objectives, reduced because of the faster burn rate of mortar propellants.

6.1 BURN CAPACITY

The performance objective for the burn capacity is 120 kg per burn for the HUTS full-sized pan. For the smaller MUTS pan, the objective is 50 kg. Results and an assessment appear in **Table 16**.

Table 16. Tested Burn Capacities for Various Models of the Burn Pan

Burn Pan	Test Location[1]	Maximum Test Load	Number of Tests	Assessment
HUTS	DRDC	120 kg[2]	4	ER-1481: Much warping of top of bonnet
HUTS	FRA	63 kg	1	ER-1481: System stable
HUTS	CGMI	120 kg[3]	2	Some warpage of sides of false bottom
MUTS	FIG	16 kg	1	System stable
HUTS	DTA	89 kg[4]	6	One spot weld broke. Easy repair.

[1] DRDC: Defence Research and Development Canada – Valcartier, QC, Canada; FRA: Fort Richardson, AK; CGMI: Camp Grayling, MI, FIG: Fort Indiantown Gap, PA; DTA: Donnely Training Area, AK

[2] Average load of 97 kg

[3] Average load of 110 kg

[4] Average load of 77 kg

Our experience with the series of burns at DTA indicates that the burn capacity should be limited to 100 kg. The radiant heat from the 90 kg burns was enough to ignite nearby vegetation **(Fig. 11).** The design was modified to reduce the capacity of the pans by reducing the heights of the sides of the false bottoms, thus guiding the artillerymen to place fewer charges in the pan.

Overall Assessment: The HUTS burn pan is capable of meeting the performance objective of 120 kg per burn. However, for fire control reasons, we recommend a 90 to 100 kg capacity limitation. There was not enough mortar propellant to test the capacity of the MUTS, although it performed well at the tested capacity (16 kg).

Figure 11. Scorching of Vegetation in Vacinity of Burn Pan Caused by Radiant Heat

6.2 REDUCTION IN MASS OF CHARGES

The performance objective for the reduction in the mass of the charges is a 99.9% reduction of the total combustible mass. For the smaller MUTS pan, the objective was the same. Results and an assessment appear in **Table 17**.

Table 17. Reduction in Combustible Charge Mass for Various Models of the Burn Pan

Burn Pan	Test Location[1]	Number of Tests	Reduction in Mass	Assessment
HUTS	DRDC	4	99.99%	ER-1481: Exceeded objective
HUTS	FRA	1	—	ER-1481: Did not get mass of residues
HUTS	CGMI	2	99.92%	Exceeded objective. Heavy rain during testing
MUTS	FIG	1	99.98%	Exceeded objective
HUTS	DTA	6	99.98%	Exceeded objective

[1] See **Table 16**

Optimal mass reduction was highly dependent on the dryness of the excess propellant charges. Wet charges proved difficult to ignite and did not burn well, resulting in some unburned propellant grains and charge bags. If additional burns are planned and future charges are dry, the unburned combustible material should burn.

Overall Assessment: Both burn pans met the performance objective of 99.9% reduction in the combustible mass of the burned charges. Even in the case of the CGMI tests, where a heavy rain occurred as the charges were burning, the mass reduction was over 99.9%. We did have problems when the propellant charges were very wet (**Fig. 12**). Burning additional loads of dry propellant on top of these residues should reduce this combustible mass as well as any unburned propellant.

Figure 12. Wet Propellant (120 kg) and Dry Propellant (460 kg) Burn Residues

6.3 REDUCTION IN MASS OF ENERGETICS

The performance objective for the reduction in the mass of energetics is <0.01% of the original mass of propellants recovered outside the pan. This value applies to both pans. Results and an assessment appear in **Table 18**.

Table 18. Reduction in the Mass of Energetics for Various Models of the Burn Pan[1]

Burn Pan	Test Location[2]	Total Mass Burned[3]	Recovered Propellant	Assessment
HUTS	DRDC	39 kg	0.01%	ER-1481: Met objective
HUTS	FRA	6.3 kg	0.08%	ER-1481: Slightly under objective
HUTS	CGMI	12 kg	<0.01%[4]	Exceeded objective. Heavy rain during testing
MUTS	FIG	0.32 kg	<0.01%[4]	Exceeded objective
HUTS	DTA	46 kg	<0.01%[4]	Exceeded objective

[1] As measured by energetics recovered outside of pan

[2] See **Table 16**

[3] Mass of analyte in charges

[4] There was not significant difference between pre- and post-burn concentrations of energetics in the soils

No objective was in the scope of work (SOW) for energetics remaining in the pan after a burn. However, we did measure the energetics in the ash for most of the tests. The results are displayed in **Table 19**. Repeated burns in the pan without cleaning out the ash will likely improve the efficiency of the pan by re-exposing any unburned propellant to another round of intense heat. An over-accumulation of residues, however, may insulate residual propellant from further burning.

The pan residues analyses are useful in that the results can be combined with the ejected energetics data to get a better indication of the burn pan efficiency. Also, hazardous waste regulations often apply only to waste that contains at least 10% of the analyte in question. If the concentration of the energetics in the ash is below 10%, it may not be required to treat it as hazardous waste. This will be up to the facility. All tests with measured pan residues had an energetics concentration of < 0.5% (0.01% – 0.44%).

Table 19. Recovery of Energetics from the Post-Burn Residues in the Burn Pan

Burn Pan	Test Location[1]	Total Mass Burned[2]	Recovered Energetics[3]	Assessment
HUTS	DRDC	39 kg	0.83g / 0.002%	ER-1481: Overall efficiency of >99.99%[4]
HUTS	FRA	6.3 kg	—	ER-1481: Residues not collected
HUTS	CGMI	12 kg	1.5g / 0.01%	99.99% overall efficiency
MUTS	FIG	0.32 kg	0.004g / .001%	>99.99% overall efficiency
HUTS	DTA	46 kg	0.33g / 0.0008%	>99.999% overall efficiency

[1] See **Table 16**
[2] Mass of analyte in charges
[3] Percent of the original mass of energetics compared to recovered from soils and following combustible mass analysis
[4] Derived by combining total energetics recovered

Overall Assessment: Both burn pans were highly successful in meeting the critical performance objective of 99.99% reduction in the combustible mass of the burned charges. Energetics within the residues after the burn(s) were also quite low, allowing safe transport and disposal of the ash.

6.4 UNIT MASS

The performance objective for the HUTS full-sized pan is 102 kg with no component exceeding 70 kg. For the smaller MUTS pan, the objective is 80 kg with no component exceeding 50 kg. There are inconsistencies between the accepted proposal (130 kg) and the demonstration plan (120 kg) as to the target mass of the HUTS. Using the proposal figure as a target with the 120 kg mass as a goal. Results and an assessment appear in **Table 20**.

Table 20. System Mass Data for all Models of the Burn Pan

Burn Pan	Test Unit[1]	Total Mass[2]	Heaviest Component[3]	Assessment
HUTS	DRDC	210 kg	Base: 113 kg	Does not meet objectives
HUTS	FRA	127 kg	Base: 49 kg	Total mass objective exceeded
HUTS	CGMI	115 kg	Base: 46 kg	Meets all objectives
MUTS	FIG	79 kg	Base: 29 kg	Meets all objectives
HUTS	DTA	119 kg[4]	Bottom: 43 kg	Meets all objectives

[1] See **Table 16**
[2] Empty complete system without any storage materiel attached
[3] Components consist of the base pan, the false bottom located within the base pan, and the top (bonnet)
[4] Tested mass was 128 kg. Post-test design modifications (final design) brought the mass down to 119 kg

Figure 13 depicts the final burn pan design. The base and perforated bonnet are clearly visible. The false bottom is located inside the base. The base is constructed of aluminum. The false bottom and bonnet are constructed of stainless steel. Hardware and loose parts were kept to a minimum to reduce costs, simplify the design, and increase its robustness.

Figure 13. Final Burn Pan (HUTS).

Overall Assessment: Both burn pans were highly met their mass performance objectives. The HUTS final design weighed 120 kg, meeting the more stringent Demonstration Plan goal, and the MUTS weighed 80 kg. All components were below the mass limitations set in the project proposal.

6.5 CONTAINMENT OF HEAVY METALS

Determination of heavy metals retention was the most difficult objective to measure. The only test that processed charges containing lead de-coppering foil strips (13g each) was the first test in Canada under ER-1481. The lead was collected in shallow pans outside the burn pan and from the collected residues inside the burn pan. Much lead was observed adhered to the grating in the bonnet, along the sides of the base of the pan, and to the false bottom, making an accurate assessment of lead remaining within the pan too difficult to conduct.

All other tests utilized charges that contained no lead foil. $PbCO_3$ is a component of some M1 howitzer propellants, and soils surrounding the burn pan were tested to determine if there was an increase in lead as a result of burning the 460 kg of charges at DTA in Alaska. A total of approximately 3 kg of lead was contained within the mass of charges burned. We checked the soil for contamination from $PbCO_3$. See **Table 21**.

Table 21. Recovery of Pb from Soil Samples Collected Outside the Burn Pan

Burn Pan	Test Unit[1]	Est. Original Mass of Pb	Lead Recovered[3]	Assessment
HUTS	DRDC	3.3 kg[2]	320g / 9.7%	ER-1481: Meets goal of <10% deposition
HUTS	FRA	–	–	ER-1481: No measurement for metals
HUTS	CGMI	–	–	No measurement: No lead in charges
MUTS	FIG	–	–	No measurement: No lead in charges
HUTS	DTA	3 kg[4]	None detected	No significant deposition outside pan

[1] See Table 16
[2] Estimated mass of lead foil in charges burned
[3] Outside of burn pan only
[4] From $PbCO_3$ in propellant formulation

Overall Assessment: The burn pan appears to be able to contain the lead from within the propellant and the lead foil contained in some howitzer propellant charges. Research conducted by Defence Research and Development Canada–Valcartier indicates that, based on 24 tests, lead deposition outside the burn pan can vary significantly, from under 10% to up to 60%, depending on the burn conditions **[34].** More research on lead deposition from burns needs to be conducted.

6.6 TURNAROUND TIME

The performance objective for the turnaround time is 12 minutes for both units. Turnaround is defined as the time between loadings of the pan. Results and an assessment appear in **Table 22**.

Table 22. Turnaround Times for the Various Burn Pans

Burn Pan	Test Unit[1]	Number of Tests	Turnaround Time[3, 4]	Assessment
HUTS	DRDC	4[2]	15 min	ER-1481: Exceeds goals
HUTS	FRA	1	–	ER-1481: No measurement
HUTS	CGMI	1	10 min	Met objective
MUTS	FIG	1	8 min	Met objective
HUTS	DTA	6	12 min	Met objective

[1] See Table 16
[2] Estimated. Tests were conducted in conjunction with fixed burn pan tests.
[3] Cool down to approximately 30°C
[4] All times were obtained while training troops on the use of the pan

Times were obtained with a stopwatch, time stamps on camera footage, or the data logger recording the temperature from thermocouples. An example of data obtained from thermocouples mounted to a burn pan is given in **Fig. 14**. For the DTA tests, output from an IR camera was used to determine the pan temperature and elapsed times (**Fig. 15**). In all cases, we approached the pan within 2 min of the cessation of visual burning, and there was no burning of combustible materials within the pan when we reached the pan.

Cool-down temperatures will depend heavily on the ambient temperature and wind conditions, with a cold, windy day resulting in more rapid cool-down times. The bonnet, which needs to be removed to load the pan, had areas that were hot to the touch, so gloves are recommended when using the pan. This is a good idea when handling propellant anyway, so it is not an additional requirement for use of the pan.

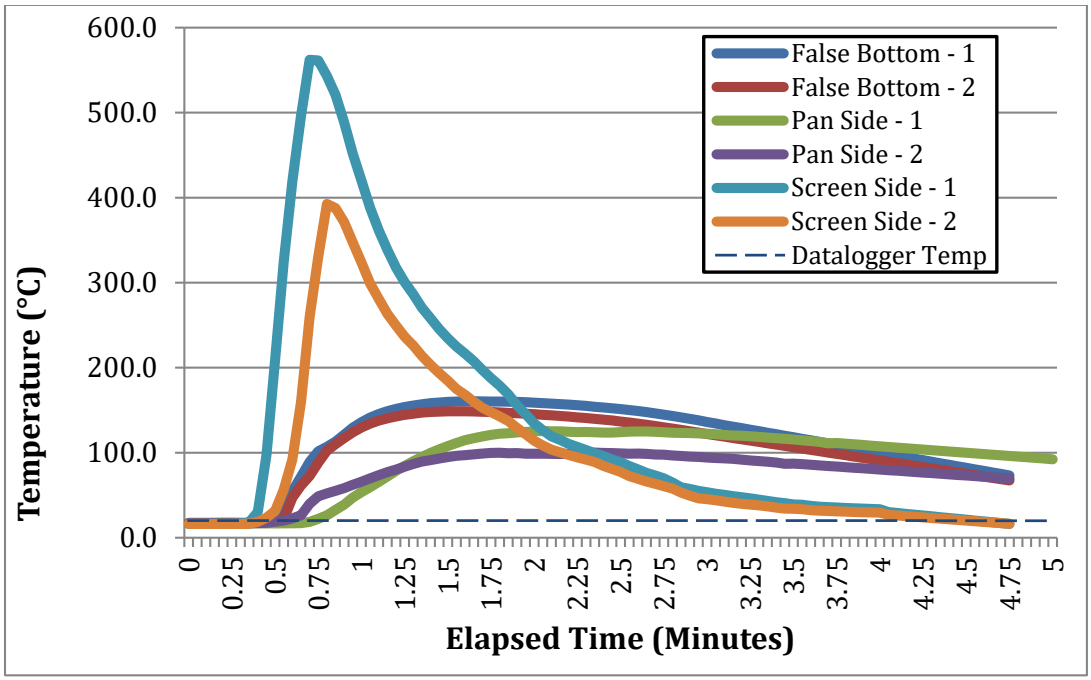

Figure 14. Graph of Component Temperatures During an HUTS Burn Pan Test

Figure 15. IR Camera Thermal Image 30 Seconds after a Test Burn

Overall Assessment: The turnover time objectives were met for both units. Times will vary depending on ambient temperature and climatic conditions.

6.7 INTEGRATION OF BURN PAN INTO TRAINING

This objective was met with enthusiasm by all facility participants with the exception of a commander of an artillery brigade in Alaska. Although the Battery commander was very interested in the pan, the Brigade commander was completely opposed to it. His replacement, with whom we trained three years later, embraced the concept, watching his troops train and requesting access to the pan for further training during the remainder of the exercise (**Fig. 16**). It was clear to most of the officers that the pan provided an excellent training opportunity for their troops. The ARNG has adopted the use of the burn pan as a Best Management Practice for all their facilities training with indirect fire weapon systems (howitzers and mortars).

Figure 16. Commander and Command Sergeant Major of the Ohio Army National Guard 1/134th Artillery Battalion Prior to First Test of Burn Pan at Camp Grayling, MI

Overall Assessment: The pan has met with generally enthusiastic acceptance by the military at sites where the equipment was tested. There will be officers that will not accept the pan based on their attitude towards the environment, but this resistance can be overcome through range policy such as that set by the Army National Guard.

6.8 EASE OF USE

Operation of the burn pan is straightforward. The two most important precautions are to not overload the pan and to not load the pan before all the residue is extinguished. At DTA, we trained one crew of two soldiers on the pan's use and they rotated one new person in for each of the next five burns. On the last burn, we only observed and provided no assistance. A Users' Manual has been provided to ESTCP that will accompany each pan **[35].**

Figure 17. Volunteers of the 2/377th PFAR Receiving a Briefing on the Theory and Operation of the CRREL Portable Burn Pan, Donnelly Training Area, AK

Overall Assessment: The soldiers associated with artillery training who also to assisted in the testing were all very interested in the burn pan concept (**Fig. 17**). They all quickly learned how to use the system, why the pan was necessary, and how it could improve their training experience.

6.9 ENVIRONMENTAL AND RANGE CONTROL ACCEPTANCE

Range and environmental managers at all three facilities where the pans were tested stated that the use of the burn pans was a very good idea. Personnel queried included range managers, facility environmental managers, the Operational Range Project Manager at the ARNG (B), and a member of the DoD's Integrated Training Area Management program.

Overall Assessment: This goal was achieved at all three installations where the pan was tested. It is recommended that a follow-up assessment be conducted to determine overall integration at the three facilities where the pans are now located.

Page Intentionally Left Blank

7.0 COST ASSESSMENT

The cost of the burn pan is highly dependent on the number built. Currently, the only units built have been in the instrument shop at CRREL. Materials cost is about $1.7K and labor was $6.5K, for a total of $8.2K. Series production at a larger sheet-metal fabrication shop will likely bring the costs closer to $6K to $7K. The cost to conduct the burn is nothing, as the troops will burn the material on site. The only cost incurred by them is the pickup and return of the pan. This compares to several potential trips to a fixed burn facility and the cost of a supervised burn at that site. The burn residues may have to be collected for processing whether the burns occur in a fixed or portable pan. The alternative to burning in a structure is burning on the ground, which is not an option at many bases and may incur a future environmental cleanup liability that can easily run into the millions of dollars.

7.1 COST MODEL

This technology is not complicated. It simply involves a well-designed, effective piece of training equipment that is simple to use, easy to clean, and portable. Costs are limited to the initial cost of the burn pan, supporting equipment, maintenance costs, storage of the equipment, and disposal costs, if any. Site characterization may be considered if the pan is regularly used in the same location, but this is unlikely to be a requirement because of the portability of the pan. Most of these costs are not new for well-maintained ranges. Disposal costs should be lower (if they occur) because they will involve only material of known composition. Training on the system is easy, with a Users' Manual available for the range, environmental, and military communities. A cost model is outlined in **Table 23**.

Table 23. Cost Model for the CRREL Portable Burn Pan

Cost Element	Data to be Tracked	Costs
Acquisition of burn pan	Cost of materials and labor	Materials: $1.7K Labor: $6.5K
Maintenance costs	Personnel required and associated labor Tools and supplies for maintenance	Labor: $1K/yr
Storage	Facility cost	$1K/yr
Waste disposal	Tools and supplies for residues collection Waste disposal costs	$0.3K Not applicable based on energetics concentration in residues
Site characterization (sampling and analysis)	Personnel required and associated labor Tools and consumable items need for sample collection Shipment costs Sample processing and analytical costs	Not applicable because of portablitiy of the system. If required by facility, costs will be approximately $60K/site.

7.2 COST DRIVERS

The largest driver for this technology is the potential environmental liabilities resulting from soil and groundwater contamination. The environmental management and legal staff of the facility will need to determine two things: If the potential sites where propellant burns are to occur will need baseline and periodic characterization for propellant contamination and whether the collected residues from the burn pan will require analysis and/or disposal as hazardous waste. Results of research conducted through SERDP and ESTCP indicates that neither of these actions will be necessary.

However, several installations currently have energetic compounds from propellants in surface and ground water, so additional precautions may be stipulated. These costs will not be additional to the burn pan as they are likely to be occurring at installations where this contamination has occurred. The burn pan may help eliminate these substantial costs through the highly efficient burning during training.

7.3 COST ANALYSIS

Costs associated with the operation of the CRREL Portable Burn Pan system are minimal. Labor is provided by the training soldiers. Maintenance should be minimal, amounting to cleaning out the residues after each training exercise and repairing any component damaged due to mishandling or use. Transport can be handled by Range personnel (to ensure proper siting) or the training personnel under Range's supervision. Storage will require a simple structure, such as a small shed or a 6 m shipping container, neither of which will require utilities.

Siting of the burn pan will depend on two factors. First, the pan will need to be in an easily accessible location that will not have combustible material nearby, such as tall dry grass, bushes, or trees. Second, it will need to be in proximity to the firing points at which the artillery will be located during training. This will allow quick, easy access for the troops, minimizing transport time to the burn site. It is unlikely that a site will need to be prepared for the pan. A parking lot or section of a firing point will likely suffice.

The cost analysis assumes that there will not be any need for treating the burn residues as hazardous waste. This eliminates the need for site characterization for the locations at which the burn pan may be located as well as the need to ship the residues off site for analysis and disposal. The exception to this is the use of propellants with lead foil decoppering agent. If charges containing the lead foil are burned, the residues will likely have to be treated as hazardous waste because of the presence of heavy metals.

There is no remediation that occurs when using the burn pan. The pan is a mitigating device that reduces the contamination resulting from training, thus preventing the future liabilities associated with remediation of contaminated soil or water.

7.3.1 Acquisition

The cost of a pan is currently $8.2K on a single-unit basis. A facility may chose to fabricate their own pan or pans locally or on base at a shop of their own. The cost of a fixed pan is $22K in a production run of 25 units (S. Thiboutot, DRDC-Valcartier: Personal communication). An installed fixed burn pan will require the additional cost of site preparation, the site itself, and likely the cost of a large concrete pad.

7.3.2 Maintenance

Maintenance costs should be minimal, as the residues will be removed following each training exercise by the trainees. A yearly one-day maintenance is anticipated. For a skilled worker at $80/hr over eight hours, costs will be around $700. These costs are comparable to the costs of a fixed burn pan, and may actually be lower as the burns are smaller than with a fixed pan and the pan is stored out of the weather.

7.3.3 Storage

The unit will need to be stored under cover to ensure availability and reduce weathering. An open shed can be built for a cost of <$1000 if no storage space is available on the facility. This is an additional cost associated with this technology.

7.3.4 Waste Disposal

The cost of waste disposal is unknown at this time as it is dependent on local disposal costs, the extent of training, and the types of munitions used. Some simple tools and supplies will be required to collect the residues from the pan following burn activities. However, the costs will be no more than those resulting from the disposal of waste from a fixed burn pan. There is no up-front cost for waste from expedient burning of propellants on the ground, but future liabilities can easily exceed $100K if soil removal and treatment is required and could run into the millions of dollars if groundwater contamination occurs. The cost of improper disposal of munitions constituents at the Massachusetts Military Reservation currently exceed $1.5B, with many years of remediation remaining.

7.3.5 Periodic Site Sampling

Periodic site sampling at firing points may be required by landowners or as part of the facility range management agreement. This will occur whichever burn method is chosen, thus the use of the portable burn pan will not incur any additional cost for this factor.

Page Intentionally Left Blank

8.0 IMPLEMENTATION ISSUES

The CRREL Portable Burn Pan system is a cost-effective technology that will accomplish many critical goals at minimal cost. From ESTCP's perspective, the pan is an excellent tool for addressing the environmental impacts that occur with inefficient fixed burn pans or burning of propellant on the ground **[36].** For the facility environmental officer, these factors are important as are the ability to minimize the environmental impact of training with live munitions on ranges. Propellant burn residues are easily collected, making hazardous waste disposal, if necessary, much easier than soil removal, the alternative for heavily contaminated areas. For the range managers, range sustainability is a major concern, with reduced environmental impacts of training with propellant burns increasing the sustainability of the ranges. The pan also provides a way for the Range to control how and where propellant burn training occurs. And finally, for the troops and their officers, the burn pan allows increased training opportunities in a much safer, controlled environment than is currently available.

This being said, we have encountered resistance to the implementation of the burn pan. One facility environmental manager said that if the residues are easy to collect, he will have to collect them and pay for their disposal. He would rather take his chances with groundwater contamination than have to deal with the paperwork. An artillery battalion commander labeled us as "radical environmentalists" interfering with the training of his men and would not allow them to participate in the test. There is a strong anti-environment streak in many of the older military officers that will be a hurdle to overcome. Mandated use through doctrine or range policy may be the only way to avoid this intransigence.

These were isolated incidents. The Range manager at the base with the resisting Environmental manager wants the burn pan used on his ranges. He sees their value in avoiding restrictions or even loss of his training areas. He oversees the Eagle River Flats impact range and knows how contamination can cripple training for soldiers. The replacement commander for the colonel who refused to participate in the tests fully accepted the use of the burn pan, requesting access to it for the duration of his unit's training.

On the regulatory side, the burn pan is a training device, not a disposal system. Thus, environmental regulations that apply to the disposal of hazardous waste do not apply. The burning of the propellant is a training activity that must be practiced by artillery units. The pan is a tool for them to accomplish this training.

Often, simple exposure to the burn pan concept is sufficient to convince responsible parties of the usefulness of the system. To see soldiers quickly learn and understand the concepts of the system and to see the pan in use are impressive events that quickly convert most skeptics. Briefings to senior officials have assisted in the promulgation of the burn pan. It was after a SERDP/ESTCP briefing that the ARNG (B) pushed for implementation of the burn pan as a Best Management Practice on facilities containing indirect fire ranges.

All materials used for the burn pan fabrication are readily available. Raw stock can be purchased from almost any metal vendors. There are few hardware items. These are standard items from industrial suppliers. There should be no problems for most installations to fabricate or contract out the fabrication of a burn pan.

Page Intentionally Left Blank

9.0 REFERENCES

[1] Walsh, MR, ME Walsh, and AD Hewitt (2010). Energetic residues from field disposal of gun propellants. *Journal of Hazardous Materials,* **173** (2010) 115–122. Elsevier, Amsterdam, The Netherlands.

[2] Walsh, MR, S Thiboutot, ME Walsh, and G Ampleman (2012a). Controlled expedient disposal of excess gun propellant. *Journal of Hazardous Materials*. **219-220** (2012) 89–94. Elsevier, Amsterdam, The Netherlands.

[3] Hunt, JW (1993) Memorandum to COL EE Wilkins, Michigan ARNG

[4] Hunt, JW, and Huntington, GN (1999) A comprehensive environmental investigation of an active artillery range. Michigan Department of Military Affairs.

[5] Pelchat, A (2010) Ammunition and explosive instruction #31: Destruction by open burning of surplus propellant, propellant increments, and artillery charges on approved burning trays. Directorate of Ammunition and Explosives Regulation, National Defence Headquarters, Ottawa, ON, CAN. July 2010.

[6] MI ARNG (2008) Camp Graying SOP; Appendix to CG REG 385-63: Procedures for the Burning of Unused / Excess Propellant. November 2008

[7] Patterson, DW (2000) SOP for use of Artillery Firing Points. December 2000.

[8] USARAK (2011) Training: Range safety. Department of the Army USARAK Regulation 350-2, Ch. 7: Indirect Fire Ranges. July 2011.

[9] US DoD (1998) Policy to implement EPA's Military Munitions Rule. Ch. 3, section B.1.a: Destruction of unused propellant. US DoD Munitions Rule Implementation Council, Washington, DC. July 1998.

[10] Sunahara, GI, L Lotufo, RK Kuperman, J Hawari, Eds. (2009) *Ecotoxicology of Explosives*. New York: CRC Press, 325 p.

[11] Kuperman, RG (2011) *Soil Screening Concentrations for Energetic Soil Contaminants: Effects on Soil Microbial Activity in Sassafras Sandy Loam*. SERDP and ESTCP's Partners in Environmental Technology Technical Symposium and Workshop. 29 Nov.–1 Dec. 2011. Washington, D.C. p. F-149

[12] Walsh, ME, MR Walsh, A Taylor, TA Douglas, CM Collins, and CA Ramsey (2011) Accumulation of propellant residues in surfaced soils of military training range firing points. *Int. J. Energetic Materials Chem. Prop.* 10(5):421–435.

[13] Thiboutot, S, G Ampleman, M Kervarec, A Gagnon, A Marois, F Boucher, and MR Walsh (2011) Fixed and Mobile Burn Pans for the Burning of Excess Artillery Propellant Charge Bags. In *Characterization and fate of gun and rocket propellant residues on testing and training ranges: Final report*. Technical Report ERDC/CRREL TR-11-13. USA CRREL, Hanover, NH.

[14] Walsh, MR, ME Walsh, CA Ramsey, RJ Rachow, JE Zufelt, CM Collins, AB Gelvin, NM Perron, and SP Saari (2006) Energetic residues deposition from 60-mm and 81-mm mortars. ERDC/CRREL TR-06-10

[15] Brochu, S, et al. (2008) Environemntal assessment of 100 years of military training at Candian Force Base Petawawa: Phase 1–Study of the presencs of munitions-related residues in soils and biomass of main ranges and training ranges. Technical Report DRDC TR 2008-118. Defence Research and Developmen Canada–Valcartier, Val-Bélair, QC.

[16] Walsh, MR, ME Walsh, and AD Hewitt (2009) Energetic residues from field disposal of gun propellants. ERDC/CRREL TR-09-8.

[17] Ampleman, G, S Thiboutot, A Marois, A Gagnon, MR Walsh, ME Walsh, CA Ramsey, and P Archambeault (2011) Study of Propellant Emitted by Triple-Base Ammunition Live-Firing using a British 155-mm Howitzer Gun at CFB Suffield, Canada. In *Characterization and fate of gun and rocket propellant residues on testing and training ranges: Final report*. ERDC/CRREL TR-11-13.

[18] Thiboutot, S, G Ampleman, S Brochu, E Diaz, I Poulin, R Martel, J Hawari, G Sunahara, MR Walsh, ME Walsh, and TF Jenkins (2012) Environemntal chatacterization of military training ranges for munitions-related contaminants: Understanding and minimizing the environmental impacts of live-fire training. *Int. J. Energetic Mater.s Chem. Prop.* 11(1):17–57.

[19] Walsh, MR (2013) Test Report: CRREL Portable Burn Pan Prototype Burn Test – Camp Grayling, MI. USA CRREL Test Report (See ESTCP Web Site)

[20] Walsh, MR (2014) Test Report: CRREL Portable Burn Pan Prototype Burn Test – Fort Indiantown Gap, PA. USA CRREL Test Report (See ESTCP Web Site)

[21] US Army National Guard (2012) Best Management Practices for Army National Guard Operational Ranges: Burn Pans. USARNB Fact Sheet 46.

[22] Walsh, MR (2015) Test Report: CRREL Portable Propellant Burn Pan Test and Demonstration of Final Version of Pan – Donnelly Training Area, AK. USA CRREL Test Report (See ESTCP Web Site)

[23] Walsh, MR (2009) User's Manual for the CRREL Multi-Increment Sampling Tool. ERDC/CRREL SR-09-1. Hanover, NH: U.S. Army Engineer Research and Development Center, Cold Regions Research and Engineering Laboratory.

[24] Walsh, MR, ME Walsh, and CA Ramsey (2012). Measuring energetic contaminant deposition rates on snow. *Water Air Soil Pollut* (2012) 223:3689–3699.

[25] Rasemann, W (2000) Industrial waste dumps, sampling and analysis. In R. Meyers (ed) Encyclopedia of Analytical Chemistry. Wiley, New York City, NY, USA.

[26] USEPA (2006) *Method 8330B: Nitroaromatics, Nitramines, Nitrate Esters by High Performance Liquid Chromatography (HPLC)*. In: Test Methods for Evaluating Solid Waste, Physical/Chemical Methods, SW-846. Washington, DC: U.S. Environmental Protection Agency Office of Solid Waste and Emergency Response.

[27] Walsh, ME, MR Walsh, and AD Hewitt (2009) Results of sampling for metals in soils surrounding a fixed burn pan at Observation Point 7, Donnelly Training Area, AK. Unpublished data (Propellant Burns-Pans.xlsx).

[28] American Infrared (2016) Product detail sheet: FLIR P60, P65, S60, and S65 Thermal Infrared Cameras. http://www.americaninfrared.com/ProductDetail.asp?ID=58

[29] Walsh, ME (2004) Field-Portable X-Ray Fluorescence (FP-XRF) determinations of metals in post-blast ordnance residues. ERDC/CRREL Technical Report TR-04-5.

[30] Walsh. ME, CA Ramsey, S Taylor, AD Hewitt, K Bjella, and CM Collins (2007) Subsampling variance for 2,4-DNT in firing point soils. Soil and Sediment Contamination 16:459–472.

[31] Hewitt, AD, S Bigl, ME Walsh, S Brochu, K Bjella, and DJ Lambert (2007) Processing of training range soils for the analysis of energetic compounds. ERDC/CRREL Technical Report TR-07-15.

[32] Hewitt, A.D., Jenkins, T.F., Walsh, M.E. Bigl, S.R., and Brochu, S. (2009) Validation of sampling protocol and the promulgation of method modifications for the characterization of energetic residues on military testing and training ranges. ERDC/CRREL TR-09-6. Hanover, NH: U.S. Army Engineer Research and Development Center, Cold Regions Research and Engineering Laboratory.

[33] US Department of Defense (1998) Spheroidal Propellant, M38 for Use in Propelling Charges M218, M219, and XM220 for Cartridges, 81MM, Smoke, M819, Illuminating M853 and Practice, XM879. Military Standard MIL-S-70547, Section 3.2.1, Table 1; and Section 3.6.

[34] Thiboutot, S, G Ampleman, M Kervarec, A Gagnon, A Marois, D Pantea, and S Withwell (2011) Determination of lead mass balance during open burning of artillery propellants; in: Proceedings of SERDP/ESTCP 2011 Workshop and Symposium, Washington, DC, NOV 2011.

[35] Walsh, MR (2016) Field Manual: CRREL Portable Propellant Burn Pan – Howitzer and mortar training systems. US Department of Defense Environmental Security Technology Certification Program, Washington, DC.

[36] Jenkins, T, and C Vogel (2014) Department of defense operational range sustainability through management of munitions constituents. SERDP and ESTCP Technical report. SERDP and ESTCP, Alexandria, VA USA.

Page Intentionally Left Blank

APPENDIX A POINTS OF CONTACT

Below is a partial list of personnel involved with testing of the burn pan. Unfortunately, most of my contacts have either retired or passed away.

Point of Contact Name	Organization Name Address	Phone Fax Email	Role in Project
Dr. Bonnie Packer	USARNG Bureau	(703) 607-7977 bonnie.m.packer.ctr@mail.mil	Proponent - ARNG
Mr. Steve Thurmond	US Army Alaska Range Control	(907) 873-1447 steven.b.thurmond.civ@mail.mil	Proponent – USARAK Range
Ms. Ellen Clark	ITAM: Donnelly Training Area	(907) 873-1614 ellen.m.clark@mail.mil	ITAM Coordinator-DTA

ESTCP Office
4800 Mark Center Drive
Suite 17D08
Alexandria, VA 22350-3605
(571) 372-6565 (Phone)
E-mail: estcp@estcp.org
www.serdp-estcp.org