FINAL REPORT

Conversion of Low Quality Waste Heat to Electric Power with Small-Scale Organic Rankine Cycle (ORC) Engine/Generator Technology

ESTCP Project EW-201251

JUNE 2016

Tim Hansen
Southern Research Institute

Distribution Statement A
This document has been cleared for public release

Page Intentionally Left Blank

This report was prepared under contract to the Department of Defense Environmental Security Technology Certification Program (ESTCP). The publication of this report does not indicate endorsement by the Department of Defense, nor should the contents be construed as reflecting the official policy or position of the Department of Defense. Reference herein to any specific commercial product, process, or service by trade name, trademark, manufacturer, or otherwise, does not necessarily constitute or imply its endorsement, recommendation, or favoring by the Department of Defense.

Page Intentionally Left Blank

REPORT DOCUMENTATION PAGE

Form Approved
OMB No. 0704-0188

The public reporting burden for this collection of information is estimated to average 1 hour per response, including the time for reviewing instructions, searching existing data sources, gathering and maintaining the data needed, and completing and reviewing the collection of information. Send comments regarding this burden estimate or any other aspect of this collection of information, including suggestions for reducing the burden, to Department of Defense, Washington Headquarters Services, Directorate for Information Operations and Reports (0704-0188), 1215 Jefferson Davis Highway, Suite 1204, Arlington, VA 22202-4302. Respondents should be aware that notwithstanding any other provision of law, no person shall be subject to any penalty for failing to comply with a collection of information if it does not display a currently valid OMB control number.
PLEASE DO NOT RETURN YOUR FORM TO THE ABOVE ADDRESS.

1. REPORT DATE *(DD-MM-YYYY)*
09/30/2016

2. REPORT TYPE

3. DATES COVERED *(From - To)*
9/19/2012 to 9/30/2016

4. TITLE AND SUBTITLE
Conversion of Low Quality Waste Heat to Electric Power with Small-Scale Organic Rankine Cycle (ORC) Engine/Generator Technology

5a. CONTRACT NUMBER
W912HQ-12-C-0059

5b. GRANT NUMBER

5c. PROGRAM ELEMENT NUMBER

6. AUTHOR(S)
Hansen, Timothy; Ringler, Eric; Chatterton, William

5d. PROJECT NUMBER

5e. TASK NUMBER

5f. WORK UNIT NUMBER

7. PERFORMING ORGANIZATION NAME(S) AND ADDRESS(ES)
Southern Research Institute
2000 Ninth Ave S
Birmingham, AL 35205-2708

8. PERFORMING ORGANIZATION REPORT NUMBER
13705

9. SPONSORING/MONITORING AGENCY NAME(S) AND ADDRESS(ES)
SERDP Program Office
901 North Stuart Street, Ste 303
Arlington, VA 22203

10. SPONSOR/MONITOR'S ACRONYM(S)
SERDP/ESTCP

11. SPONSOR/MONITOR'S REPORT NUMBER(S)
EW-201251

12. DISTRIBUTION/AVAILABILITY STATEMENT
Approved for public release; distribution is unlimited

13. SUPPLEMENTARY NOTES
None

14. ABSTRACT
An Organic Rankine Cycle generator (ORC) converts low-grade waste heat (<250 °C) into electric power using organic working fluids with lower boiling points than the common steam-based Rankine cycle. The demonstration objectives were to verify the performance, economics and applicability of the ElectraTherm ORC in both controlled load and real world conditions at a DoD site.

15. SUBJECT TERMS
Organic Rankine Cycle, Waste Heat, Diesel Generator, Fuel Savings, Cost Savings, Emissions Reductions

16. SECURITY CLASSIFICATION OF:			17. LIMITATION OF ABSTRACT	18. NUMBER OF PAGES	19a. NAME OF RESPONSIBLE PERSON
a. REPORT	b. ABSTRACT	c. THIS PAGE			Tim Hansen, SR
U	U	U		69	19b. TELEPHONE NUMBER *(Include area code)* 919-282-1050

Page Intentionally Left Blank

REVIEW NOTICE

This report has been peer and administratively reviewed by Southern Research Institute and the U.S. Department of Defense ESTCP program, and approved for publication. Mention of trade names or commercial products does not constitute endorsement or recommendation for use.

Acknowledgments:

Southern would like to acknowledge the funding support the U.S. Department of Defense Environmental Security Technology Certification Program (ESTCP). Southern would also like to acknowledge Tom Brokaw and John Fox of ElectraTherm, as well as the efforts of ElectraTherm's engineering staff. Southern would like to acknowledge the invaluable support provided by chief Juan Aragon and the crew from Naval Facilities Engineering and Expeditionary Warfare Center (EXWC), Mobile Utilities Support Equipment (MUSE) Division. Finally, Southern would acknowledge the very helpful assistance from Allan Robichaux, DPW PWD GTMO and the management and staff of the GTMO on site contractor, Centerra.

Page Intentionally Left Blank

Table of Contents

Executive Summary **1**
1.0 INTRODUCTION **2**
1.1 BACKGROUND 2
1.2 OBJECTIVE OF THE DEMONSTRATION 3
1.3 REGULATORY DRIVERS 5
2.0 TECHNOLOGY DESCRIPTION **5**
2.1 TECHNOLOGY OVERVIEW 5
2.2 TECHNOLOGY DEVELOPMENT AND MARKET PENETRATION 8
2.3 ADVANTAGES AND LIMITATIONS OF THE TECHNOLOGY 9
3.0 PERFORMANCE OBJECTIVES AND RESULTS **10**
3.1 SUMMARY OF PERFORMANCE OBJECTIVES AND RESULTS 10
3.2 RESULTS AND DESCRIPTIONS FOR EACH PERFORMANCE OBJECTIVE 12
3.2.1 Increase Energy Output 12
3.2.2 Increase Integrated Power System Efficiency 18
3.2.3 Determine ORC Efficiency 19
3.2.4 Verify Availability, Reliability and Operability 19
3.2.5 Evaluate System Economics 20
3.2.6 Determine GHG Emissions Reductions 20
4.0 FACILITY/SITE DESCRIPTION **22**
4.1 FACILITY/SITE LOCATION AND OPERATIONS 22
4.2 FACILITY/SITE REQUIRED CONDITIONS 25
4.3 SITE-RELATED PERMITS AND REGULATIONS 25
5.0 TEST DESIGN **26**
5.1 CONCEPTUAL TEST DESIGN 26
5.2 BASELINE CHARACTERIZATION 27
5.3 DESIGN AND LAYOUT OF TECHNOLOGY COMPONENTS 28
5.3.1 System Layout 31
5.4 OPERATIONAL TESTING 32
5.4.1 Intensive Testing 32
5.4.2 Long-term Monitoring 34
5.4.3 Operations Monitoring Schedule 35
5.5 SAMPLING PROTOCOL 35
6.0 PERFORMANCE ASSESSMENT **36**
6.1 Increase Energy Output 36
6.1.1 Considerations for Deployed Testing 37
6.1.2 Correction for Ambient Conditions 38
6.2 Increase Integrated Power System Efficiency 39
6.3 Determine ORC Efficiency 39
6.4 Verify Availability, Reliability and Operability 40
6.5 Evaluate System Economics 41
6.6 Determine GHG Emissions Reductions 41
6.7 Data Quality 43
6.7.1 Data Quality Assessment for Key Performance Objectives 43
6.7.2 Ancillary Data Quality 45
6.7.3 Instrument Calibrations and Quality Checks 45
6.7.4 Data Quality Review and Validation 46
6.7.5 Data Management 47
7.0 COST ASSESSMENT **47**
7.1 COST MODEL 47

7.2 COST DRIVERS 50
7.3 COST ANALYSIS AND COMPARISON 51
8.0 IMPLEMENTATION ISSUES 54
9.0 REFERENCES 56
APPENDICES 57
Appendix A: Points of Contact 57
Appendix B: Design Drawings 58
Appendix C: Monitoring Instrument Specifications 61

Tables

Table 1. Potential DoD Applications for ORC Technology 3
Table 2. Performance Objectives and Results 11
Table 3. Baseline and Integrated Test Fuel Consumption and Fuel Economy at Nominal Load Conditions 16
Table 4. Fuel Savings or Equivalent Additional Power at Nominal Load Conditions 16
Table 5. Conservative Savings at Design Conditions (with 45 kW Reduction in Cooling Load) with Propagated Uncertainty 18
Table 6. Intensive Test Run Matrix 34
Table 7. Operations Monitoring Schedule 35
Table 8. Fuel Analysis Results and Comparisons 38
Table 9. Heat Transfer Fluid Properties 40
Table 10. Basis of GHG Emissions Reduction Calculation 42
Table 11. LCCA Cost Elements 48
Table 12. BLCC Inputs for Projected Economics 52
Table 13. Project Economics: Total System Benefit - ORC Electric Output plus Cooling Load Reduction (45 kW) 53

Figures

Figure 1. ElectraTherm Power+ 6500 Generator (panels removed) 6
Figure 2. ORC General Schematic 7
Figure 3. ElectraTherm ORC Component Layout 8
Figure 4. GTMO Installation Site 23
Figure 5. ORC and Genset Installation at GTMO 24
Figure 6. ORC Unit Installed at GTMO 24
Figure 7. Temperature-Entropy Diagram for ElectraTherm's SRI/DoD ORC Design 29
Figure 8. Engine/EGHX Container Layout 31

Acronyms

Acronym	Definition
ADQ	Audit of data quality
AIRR	Adjusted Internal Rate of Return
ANSI	American National Standards Institute
ASME	American Society of Mechanical Engineers
BLCC	Building Life-Cycle Cost
BoP	Balance of plant
BPVC	ASME Boiler and Pressure Vessel Code
BTU	British thermal units (energy, usually thermal or chemical)
BTU/h	British thermal units per hour (rate of energy transfer or use)
CHP	Combined heat and power
CO_2, CO_{2e}	Carbon Dioxide, Carbon Dioxide Equivalent
CONUS	Continental United States
dB	Decibel
DG	Distributed Generation
DoD	United States Department of Defense
DOE	US Department of Energy
EGHX	Exhaust gas heat exchanger
EIA	US Energy Information Administration
EPA	U.S. Environmental Protection Agency
ESTCP	U.S. Department of Defense Environmental Security Technology Certification Program
F	Fahrenheit
FMEA	Failure Mode and Effects Analysis
GHG	Greenhouse Gas
gpy	gallons per year
HazOp	Hazard and Operability Review
IC	Internal Combustion
kW	kilowatt
kWh	kilowatt-hour
lb	Pound
LCCA	Life Cycle Cost Analysis
LCOE	Levelized Cost of Energy
LFG	Landfill gas
LLR	Liquid Loop Radiator
MM	million
MOA	Memorandum of Agreement
MWh	Megawatt hours
NEC	National Electric Code
NESHAP	National Emissions Standard for Hazardous Air Pollutants

Acronym	Definition
NFPA	National Fire Protection Association
NIST	National Institute of Standards and Technology
NPV	Net Present Value
NREL	USDOE National Renewable Energy Laboratory
NSPS	New Source Performance Standard
O&M	Operations and Maintenance
O&MR	Operations, Maintenance and Repair
OMB	Office of Management and Budget
ORC	Organic Rankine Cycle
PED	Pressure Equipment Directive
PFD	Process Flow Diagram
P&ID	Process and Instrumentation Diagram
ppm	Parts per Million
psi	Pounds per Square Inch
PTO	Power take-off
QA/QC	Quality Assurance / Quality Control
scf	Standard Cubic Feet
scfm	Standard Cubic Feet per Minute
SERDP	Strategic Environmental Research and Development Program
SIR	Savings to Investment Ratio
UFC	Unified Facilities Criteria Program
USACE	United States Army Corps of Engineers
USEPA	Environmental Protection Agency
VFD	Variable Frequency Drive

Executive Summary

An Organic Rankine Cycle generator (ORC) converts low-grade waste heat (<250 ºC) into electric power using organic working fluids with lower boiling points than the common steam-based Rankine cycle. For this demonstration Southern Research identified the ElectraTherm ORC as a well-designed and supported, cost effective, and appropriate ORC technology with a wide range of applications within DoD. The ElectraTherm ORC integrates proven components and optimized thermodynamics and controls to effectively utilize waste heat from comparatively small but ubiquitous sources such as internal combustion engines, gas fired boilers, turbines, oxidizers, process heat, solar thermal and geothermal, flares, compressors, and other sources.

One of ElectraTherm's target markets is utilizing waste heat from large stationary reciprocating engines. The ORC model demonstrated was optimized to utilize waste heat from 1 MW class diesel generator sets commonly deployed in prime power applications at remote DoD sites and forward operating bases worldwide. The system was packaged in two, standard 40 foot ISO containers: the first containing a packaged Cummins 1.2 MW diesel generator, an exhaust gas heat exchanger plus switchgear and controls; and the other containing the ORC generator and a high efficiency radiator. The engine's stock, PTO driven, radiator was removed and significant additional energy savings were realized by allowing the high efficiency ORC radiator to also cool the engine.

The demonstration objectives were to verify the performance, economics and applicability of the ElectraTherm ORC in both controlled load and real world conditions at a DoD site. Southern and ElectraTherm were supported by the Navy's Mobile Utilities Support Equipment (MUSE) Division.

Controlled load baseline tests of the unmodified genset and intensive tests of the fully integrated system were successfully conducted at the MUSE yard in Pt. Hueneme, CA. The equipment was heavily instrumented to allow for detailed performance assessment and optimization. The unit was then deployed to Guantanamo Bay Naval Station (GTMO) for further monitoring during extended operation under field conditions. Installation and initial off-grid commissioning at GTMO went well; however, repeated efforts to commission the system to operate in parallel mode on the GTMO grid was not successful, and the demonstration was terminated before field data could be collected. These issues were ultimately traced to poor workmanship on the generator controls installation during packaging. The ORC itself performed as expected in the field and tests conducted at GTMO confirmed that the issues encountered were in no way related to ORC or to integration of the ORC with the genset.

Sufficient data were collected during the controlled load tests to fully characterize the performance of the integrated system compared to baseline. During the controlled load tests, the ORC produced a net output of 38.7 kW at 900 kW generator load under prime, unlimited service. The reduction in cooling load on the engine due to the radiator improvements was measured at 87.7 kW under these same conditions; however, this high measured value was not fully explainable. Based on our investigations, Southern believes that a conservative value for the reduction in cooling load is 45 kW additional power output for the same fuel input. Taken together, direct ORC power output (38.7 kW) and the conservative estimate of reduction in cooling load due to the radiator improvements (45 kW) amounted to a 9.3 (±0.65) percent increase in overall fuel economy or, alternatively, an 83.7 kW increase in power output for the same fuel input. This value is used for calculation of GHG reductions and economic results.

Life cycle economics of the system are favorable with better than 5 year payback for base load operation at moderate expected prices projected for diesel fuel ($3.25/gallon). Note that economics would not be favorable for typical backup generator operating scenarios. System operability is very good, with low maintenance and minimal training requirements over those for baseline generator set operation.

1.0 INTRODUCTION

The U.S. Department of Defense (DoD) is America's largest energy consumer, representing over 75% of federal energy consumption and spending over $4 billion annually on facility energy as of FY 2014. The Department has been making significant efforts toward reducing the intensity of energy consumption, improving energy efficiency, increasing renewable energy usage, and improving energy security [1].

The Department's facility energy strategy is comprised of four elements:

- Reduce energy demand through conservation and energy efficiency;
- Expand the supply of renewable energy and other forms of distributed (on-site) energy;
- Enhance the energy security of DoD installations and
- Leverage advanced technology.

Application of novel technologies can result in significant energy and cost savings and progress toward achieving the energy efficiency and renewable energy directives set forth by the DoD, Congress, and the President.

This project was proposed as a DoD field demonstration under the Environmental Security Technology Certification Program (ESTCP) program to evaluate the performance and efficacy of a waste heat to energy technology that addresses DoD energy goals.

1.1 BACKGROUND

In efforts to improve the overall efficiency of energy generation and use at DoD facilities, attention must be given to waste energy sources in existing and planned energy systems at DoD installations. One of the largest sources of wasted energy is in the form of waste heat – thermal energy emitted via hot exhaust and heat removal systems associated with engine and other electric generator systems, waste heat from steam or heat distribution, waste heat from boiler exhausts, and heat emitted from cooling systems. A very large number of waste heat sources occur at DoD sites. Steam boilers, hot water boilers, engine generators, and similar equipment typically lose 20-60% of the energy input to the system as waste heat. These types of waste heat sources and others are ubiquitous at DoD facilities domestically, worldwide, and in deployed scenarios.

In current energy systems, recovery and use of waste heat is often possible but rarely accomplished due to a lack of knowledge about technology options and benefits, the difficulty of finding ways to effectively use the waste heat available, a lack of viable technology options for low quality heat (< 250 °C), and other factors. The ability to recover the heat for useful purposes is the foundation of the high efficiency achievable in combined heat and power (CHP) applications. Where applicable, CHP systems are an excellent solution to the waste heat problem, as are improvements in building energy management, insulation, and system optimization. However, for those applications where heat cannot be used cost effectively, there are additional options that can provide improved energy system efficiency and cost savings.

The Organic Rankine Cycle (ORC) engine-generator converts low quality waste heat directly into electric power, allowing for utilization of a large domestic energy resource that can reduce grid electricity use, offset fossil fuel combustion with the associated emissions and security risks. Higher grade industrial waste heat has been recovered for years using steam driven Rankine Cycle engines. Until recently, however, technology was not available commercially to recover low quality waste heat at smaller scales - and low grade heat is where the greatest opportunities exist. Recent advancements with ORC engines make tapping this resource viable [2].

The ORC can provide significant energy cost savings in certain applications, and can improve energy security by providing increased on-site energy production or fuel economy. A summary of potential applications and benefits of ORC technology to DoD is given in Table 1.

Table 1. Potential DoD Applications for ORC Technology

ORC Application Type	Available Heat Source (continuous operation)	ORC Benefits	Potential DoD Sites
Engine Generators – remote and deployed locations (FOBs)	Waste heat from engine jacket water and/or exhaust	Increased efficiency Reduced power costs Reduced fuel consumption, transportation and costs. Reduced emissions intensity.	**Mobile:** MUSE (35 units, >1MW) Army (>200 units, 840 kW) Air Force (~100 units, 800 kW) **Stationary:** Many in standby and prime service, e.g., GTMO (10+ units, >1MW), Maine (4+ units, >1MW)
Steam Boilers and CHP Systems	Waste heat from stack exhaust, excess capacity in economizers and heat exchangers, condensate / steam returns	Increased system efficiency, added on-site power generation, reduced emissions intensity	41 appropriately sized boilers at steam plants at 12 Army Installations 5 large CHP systems (engine and turbine), other locations possible
Engine Generators – Landfill Gas (LFG) / Biogas	Waste heat from engine jacket water and/or exhaust	Increased system efficiency, added on-site power generation, reduced emissions intensity	MCAS Miramar, Hill AFB, Ft. Richardson, CGS Curtis Bay, MCLB Albany, 26 MW of planned installations by 2020
Biomass Power and/or Heating Systems	Waste heat or increased heat output (due to low fuel costs)	Increased efficiency. Increased renewable energy generation.	Handful of sites currently using biomass, but more potentially coming as renewable energy targets are addressed
Solar Thermal Systems	Excess or unused heat capacity in the solar thermal system	Increased efficiency Increased renewable energy generation	Large installation at Camp LeJeune (900 homes). Other examples include Port Hueneme Naval Base, Mayport Naval Station, the Army Parks Reserve Forces Training Area, Fort Hood and Moody and Kirtland AFB. Current ODUSD I&E initiative to expand deployment. If heat not used year round, ORC could be implemented.

1.2 OBJECTIVE OF THE DEMONSTRATION

The overall objectives of the demonstration were to (1) install and evaluate an ORC system that produces electric power from waste heat using a heat source representative of commonly available low quality heat sources within DoD, and (2) assess the applicability of ORC implementation across the DoD. These objectives were evaluated by the following activities.

- Design, build and package for deployment an ORC generation system that optimizes utilization of jacket water and exhaust gas waste heat from a diesel genset of a capacity (~ 1MW) commonly deployed at DoD sites.

- Determine the technical and financial performance of the ORC system through rigorous performance verification during short term intensive testing and longer term deployment as described in this plan.
- Assess ORC technology transfer potential across DoD facilities.
- Deliver a final report that fully documents all project activities, data collection and analyses, results, conclusions and recommendations.
- Deliver a cost and performance report focused on providing information that program, facility, and installation managers, regulators, and other stakeholders can use in making implementation decisions.
- Provide guidance within the above reports for determining the applicability of the ORC to a variety of site types, conditions, and economics.
- Conduct outreach activities such as presentations at conferences and symposia to publicize the activities and results of the demonstration.

Success factors validated during the demonstration include ORC energy production and integrated system efficiency gains, economics, and operability including reliability and availability.

The fully integrated packaged ORC/generator set system was deployed at the US Naval Station, Guantanamo Bay (GTMO) as determined by the DoD project partner in accordance with Southern's site selection criteria.

The demonstration evaluated and demonstrated the potential for the application of ORC technology to improve energy efficiency at DoD facilities. A field demonstration is necessary to ensure that:

- the ORC performs as anticipated under the conditions at which DoD equipment operates;
- the ORC system reliability, availability and operability are sufficient for DoD applications, which can include critical energy supply applications;
- the integration of the system in the proposed applications with the required balance of plant and waste heat source equipment does not negatively impact site operations;
- the system economics and other benefits are attractive enough to justify broader implementation of the technology within DoD;

1.3 REGULATORY DRIVERS

Energy security, environmental sustainability, and cost savings are all drivers for adoption of ORC waste heat to energy technology. The ORC utilizes low grade waste heat (less than 250 ºC), improves energy efficiency by reducing energy consumption associated with electrical generation and reduces greenhouse gas emissions by increasing electrical generating efficiency.

This demonstration addresses several specific drivers for DoD energy efficiency and renewable energy goals, specifically:

- Reduce annual fuel usage [National Defense Strategy June 2008]
- Reduce installation energy usage by 30% by 2015 [Executive Order (EO) 13423 /2007 Energy Act]
- By 2010, reduce fossil fuel in all buildings: 55% ; 100% by 2030 [2007 Energy Act]
- Increase non-petroleum fuel by 10% per year [EO 13423/2007 Energy Act]
- Maintain Federal leadership in sustainability and greenhouse gas emission reductions [EO 13693/2015]

2.0 TECHNOLOGY DESCRIPTION

The ORC engine converts waste heat into electric power and is able to use low quality (<250 ºC) heat through the use of organic working fluids with lower boiling points than the common steam-based cycle. Small scale ORC engines have recently become available which allow recovery of waste heat from comparatively small but omnipresent sources like internal combustion (IC) engines, gas fired boilers, turbines, waste oxidizers, process waste heat, solar thermal applications, and other sources [2].

2.1 TECHNOLOGY OVERVIEW

Southern Research identified the ElectraTherm ORC generator as a well-designed and supported, cost effective, and appropriate ORC technology with a wide range of applications within DoD.

ElectraTherm's Power+ 6500 ORC generator (see Figure 1) is a compact, packaged system with gross output up to 110 kWe. The Power+ generator boasts simple installation, low maintenance, and integrated controls that allow the system to continue producing power from a variable waste heat supply without affecting the operation of upstream systems.

Figure 1. ElectraTherm Power+ 6500 Generator (panels removed)

The Power+6500 utilized for this demonstration is a next generation model of ElectraTherm's GM4000 model optimized to effectively utilize as much waste heat as thermodynamically practicable from a 1MW class diesel generator set, maximizing ORC power output. This class of generator set is commonly deployed to serve DoD installations and forward operating bases, utility peak load and industrial/commercial peak shaving applications, oil and gas exploration, and emergency standby generation.

To facilitate deployment, the integrated system was packaged in two standard 40 foot ISO shipping containers with design consideration given to safety, simple installation, and convenient operation. The integrated system consisted of the ORC generator and dry cooler (radiator) packaged in one container, and the diesel genset, switchgear and exhaust gas heat exchanger packaged in the second container (see Figure 8 in Section 5.3.1).

The data collected and lessons learned from this demonstration provided ElectraTherm with the capability to adapt their product offerings to optimize power gain and efficiency from 1 MW class diesel generators and other applications with similar waste heat availability. This experience with packaged applications was of benefit to DoD, as well as ElectraTherm as it advances commercial availability of deployable systems.

The basic components of an ORC generator are illustrated in Figure 2. These include:

- a preheater which raises the working fluid temperature close to that of the engine's jacket water
- an evaporator in which the ORC working fluid is vaporized to create a pressurized hot vapor stream,
- a power block (expander) that allows gas expansion and converts the energy into rotational work,
- an electric induction generator driven from the power block, and
- a condenser to remove heat from the system that cannot be converted to electric power

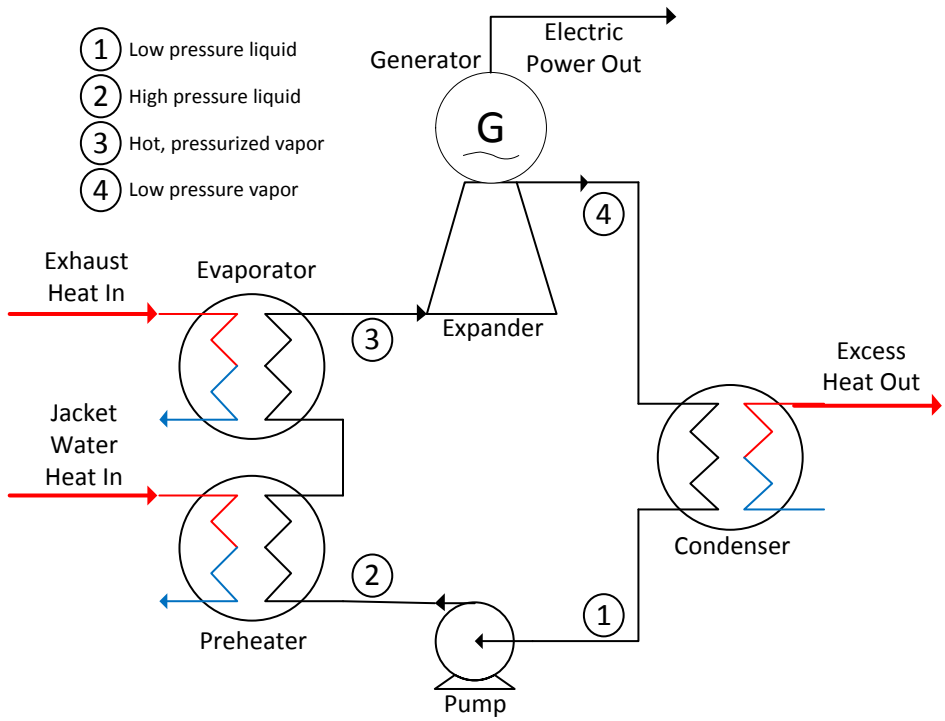

Figure 2. ORC General Schematic

The component layout for the ElectraTherm Power+ 6500 is illustrated in Figure 3.

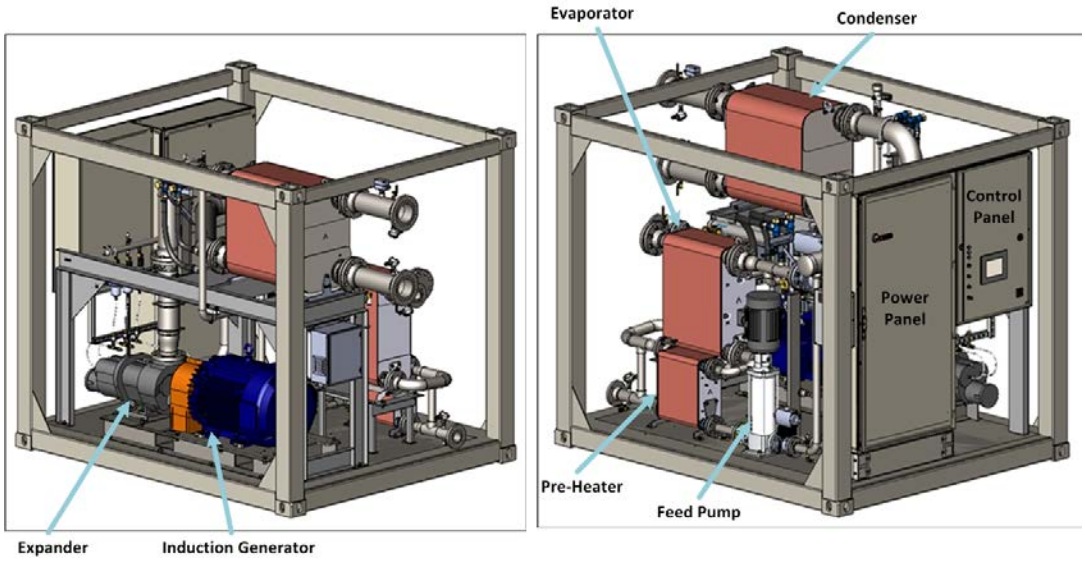

Figure 3. ElectraTherm ORC Component Layout

A number of working fluids are employed in ORC engine designs (i.e. R134a, R245fa, n-pentane and silicon oils). The working fluid must be well matched to the heat source and ORC system components to optimize cycle efficiency and performance [3]. ElectraTherm has selected R245fa due to the following advantages:

- High latent heat of vaporization
- High vapor density
- Good heat transfer
- Non ozone depleting
- Low Global Warming Potential
- Non-flammable
- Excellent thermal stability
- Low viscosity
- Compatible with existing refrigeration tool sets in service shops

The ElectraTherm ORC heats and vaporizes the working fluid in two stages; first through a preheater (heated by engine jacket water), and then through the evaporator (heated by exhaust gas). In this application, the advantage of the split preheater/evaporator configuration is that a higher evaporation temperature (and thus pressure) can be achieved if the working fluid is first heated to the jacket water temperature, allowing full advantage to be taken of the high grade exhaust gas heat. The two-stage heat input configuration also provides design flexibility for adapting the ElectraTherm ORC to most efficiently utilize waste heat from a variety of sources.

A regenerator is used in some ORC engine designs to re-capture heat from the condenser loop to preheat the working fluid. The ElectraTherm design does not include a regenerator as excess heat is already available from the engine's jacket water for preheater duty.

2.2 TECHNOLOGY DEVELOPMENT AND MARKET PENETRATION

ElectraTherm began commercial production of the first series 4000 ORC units in mid-2011. At the time the proposal for this demonstration was submitted, the series 4000 was recently introduced and had accumulated fewer than 100 hours. Prototype and beta versions of the ElectraTherm ORC had accumulated only about 9000 hours at that time.

As of April 2016, ElectraTherm's fleet of 50 commissioned units installed in 14 countries had accumulated over 520,000 hours (nearly 60 years) of run time at an average availability of >97%. ElectraTherm has made very rapid progress in successfully bringing their product to market and the larger, 6500 series unit developed during this demonstration now represents the majority of new installations and new customer enquiries.

Much of the early market penetration occurred in Europe where incentives for energy efficiency and clean, renewable energy generation are generally greater than in US markets. ElectraTherm is actively seeking greater domestic market penetration in both government (e.g., DoD) and private sectors, as well as developing new markets in Asia.

About half of the installed fleet is utilizing waste heat from generator sets, followed by applications in district heating and biomass applications. Other units are installed in geothermal, process heat, and solar thermal applications. Genset applications in the 0.5-2MW range remain a primary market focus along with flare to power and geothermal applications.

2.3 ADVANTAGES AND LIMITATIONS OF THE TECHNOLOGY

The chief advantage of ORC generators is the ability to recover useful energy from low grade (< 250 ºC) waste heat. The availability of small, economical ORC generators allows for efficient utilization of available waste heat from common sources within DoD such as diesel generators.

Compared to steam cycle generators, the low working pressure in ORC power plants reduces capital costs for machinery and piping. In addition to lower up-front costs, the operational lifetime of ORC system components is increased relative to steam-cycle systems due to the non-eroding and non-corroding nature of the organic working fluids.

The ElectraTherm ORC design takes full advantage of the inherent benefits of smaller ORC generators over steam cycle and larger scale ORC designs and implements a number of improvements that result in a more economical, robust and efficient system than competing small scale ORC designs. The ElectraTherm ORC is intended to be a plug in appliance and is designed to avoid the need for custom engineering – reducing installation costs.

Central to ElectraTherm's ORC technology improvements is the use of a twin screw expander. The Electraherm expander is based on a common, commercially available refrigeration compressor that has been adapted to operate in reverse as a radial inflow turbine. The use of this type of expander introduces a number of advantages including:

- Low cost and high reliability of proven 'off the shelf' components
- Low RPM - allowing for direct coupling to a standard induction generator - which reduces capital and maintenance costs, and improves reliability and efficiency
- Wet vapor tolerance – improves cycle efficiency, reduces demand for high grade heat that would be required for dry vapor systems, and allows for in-process lubrication [4]

In the ElectraTherm ORC designs, lubricant is carried with the refrigerant in a closed loop system and the unit requires no oil changes or lubrication sub-system, reducing capital and maintenance costs and improving reliability. ElectraTherm systems utilize R245fa organic refrigerant approved by the EPA in the U.S. and the Montreal protocol in the U.K. and Europe. Some ORC systems use toxic or flammable working fluids.

The complete system (less radiator) is housed in a compact 6.5 x 8.8 x 7.5 ft. frame that can be moved with a forklift. For the DoD packaged unit demonstrated, installation consisted of four pipe connections (supply/return for the jacket water and exhaust gas loops) and electrical and control connections (see section 5.3.1).

The system implements fully automated controls with remote access diagnostics. The system configuration and control strategy allow the Power+ to follow a varying heat supply over a 5:1 turndown ratio. This turndown capability greatly improves up-time and cumulative energy production over time. If the heat supply is interrupted, the system will automatically ramp down power output until residual heat is consumed and then resume output once the heat source returns. Controls integration with upstream equipment is not required to accomplish this heat source following behavior.

The Power+ 6500 uses an induction generator rated at 110 kW for electric power production. An induction generator does not require synchronization to the grid. Voltage and frequency regulation are naturally provided from the connection to the power grid. Similar to industrial motors, induction generators are inexpensive, robust and proven; employing no brushes, commutator, slip rings, exciter, regulator, synchronizer or other complex parts. The Power+ units use integral power factor correction capacitors to improve the inherently low power factor of the induction generator to a value from 0.90 to unity, depending on load.

In most applications, waste heat rejection requires energy. For example, the radiator on a diesel engine requires a fan, and cooling may represent a parasitic load on the system of as much as 5% of system power output. That cooling requirement is paid for in kW (electric driven fans) or horsepower (shaft driven fans). The ORC can replace a portion of this parasitic load, resulting in gains in overall system efficiency. While ORC thermal to electrical efficiency is low (typically 5-15%) and ORC generator output may represent only a 5-10% increase in total generating system efficiency, careful integration of the ORC within the overall system can yield overall system efficiency improvements that are much greater than that represented by the ORC generator output alone. In addition, if there is a local use for heat remaining after the ORC, further overall system efficiency gains can be realized.

The integrated system designed for this demonstration replaces the engine's PTO-driven, constant load radiator fan with a high efficiency radiator and VFD driven fan that allows the cooling benefit of ORC integration to be realized and results in an additional total system efficiency gain of up to 5% over the net output of the ORC engine alone.

One limitation of ORC generators in general is that performance can depend on the heat sink temperature. Performance of air cooled systems can be significantly degraded in very hot ambient conditions. For DoD deployments, closed loop, air cooled systems are a general requirement since water availability is often restricted.

A limitation specific to the ElectraTherm units is that, due to the use of the induction generator, the system cannot operate in a stand-alone 'island mode' without a large prime mover (approx.. 10X ORC output) to sync to. As mentioned above, the induction generator requires grid interconnection to function. In the event of a grid loss, the Power+ ORC units will automatically shut down, and cannot be re-started until line conditions return to normal. This is not a limitation in genset applications of this scale since, at normal load conditions, the generator set provides sufficient frequency regulation for the ORC to operate. The Department of Energy did fund ElectraTherm for a preliminary off-grid design but market pull has not lead to further investment to complete detailed design and testing of a true off-grid solution.

3.0 PERFORMANCE OBJECTIVES AND RESULTS

The performance objectives for this demonstration system relate to power output and system efficiency gains, reliability/operability, emissions reductions, and economics of the integrated ORC/genset system compared with baseline conditions. The baseline consists simply of operating the diesel genset as originally configured by the manufacturer. The system under test includes the engine-genset, the ORC system and the cooling system.

3.1 SUMMARY OF PERFORMANCE OBJECTIVES AND RESULTS

Key demonstration objectives were achieved, including verification of overall system performance and economics, during baseline and intensive testing of the integrated system prior to deployment; however, some of the demonstration objectives (e.g., availability/reliability) could not be fully quantified due to lack of longer term, deployed testing caused by the failure to commission the genset on the GTMO grid following deployment. Details concerning this issue are presented in full in section 8.0. Note, however, that this issue was in no way caused by the ORC itself or by the integration of the ORC with the genset.

Data requirements and success criteria for each demonstration objective are summarized in Table 2. Details for each objective are provided under section 3.2.

Table 2. Performance Objectives and Results

Performance Objective	Metric	Success Criteria	Results
Increase energy output using waste heat without additional fuel input	ORC electric output kW, genset fuel efficiency (kWh/gallon)	Net energy output from ORC >50kW at design conditions (900 kW load) to be achieved without reducing genset efficiency or operability.	Objective met: Net energy output of integrated system conservatively increased by 83.7 (±7.9) kW. Measured integrated system output was as high as 130.2 kW at design conditions.
Increase integrated power system efficiency	System efficiency gain (%), fuel economy gain (kWh/gallon)	Total power system efficiency increase >5% at design conditions in prime unlimited service.	Objective met: Conservative overall system efficiency gain was 9.3 (±0.65) percent. Measured efficiency gain was as high as 14.5%.
Determine ORC internal efficiency	Thermal/electric efficiency (%)	ORC internal efficiency > 7%. Net ORC efficiency (including all parasitic loads) > 5%.	Not determined: Deployed test data not available. Modeled net efficiency (5.9 to 6.8%) meets objective.
Demonstrate high availability and reliability	Service hours as percentage of period hours (%)	Availability >95%, reliability >97% on fully commissioned system.	Not demonstrated: Field demonstration was terminated due to commissioning issues. ElectraTherm has extensive fleet data showing >97% availability.
Demonstrate Operability	Qualitative	Use of system does not impose an excessive burden on operations and maintenance staff and deployment operations.	Partially demonstrated: Initial indications are all good, but insufficient information was collected due to early termination of the demonstration.
Economics	Life cycle NPV net savings ($), SIR and AIRR (%), simple and discounted paypack period (yrs)	Simple payback < 5 years.	Objective met: Simple/discounted payback occurs in year 4 at current GTMO fuel prices ($3.25/gallon).
Determine GHG emissions reductions	metric ton/yr CO2e	GHG emissions reductions greater than 200 metric ton CO2e/yr.	Objective met: 464 metric ton CO2e total emissions reduction.

3.2 RESULTS AND DESCRIPTIONS FOR EACH PERFORMANCE OBJECTIVE

The following subsections describe each demonstration performance objective, discuss success criteria and factors involved in evaluating performance for each objective, and summarize results. Details of the performance assessments conducted are provided for each objective in section 6.0.

3.2.1 Increase Energy Output

Simply stated, this objective is to increase integrated system power output by a total of at least 50 kW over baseline at design conditions using waste heat and without additional fuel input. This increase benefits DoD installations by either providing additional power or reducing fuel consumption. *An important additional benefit for DoD is recovered capacity*. The power output for generating units must often be de-rated in hot climate deployments due to decreased cooling capacity. ORC integration recovers a portion of this diminished generating capacity in two ways: by generating power from waste heat and increasing engine cooling capacity.

The total increase in energy output is the sum of the net electric power (less parasitic loads) generated directly by the ORC engine and the effective increase in integrated system power output due to the reduction in cooling load on the engine. The 50kW goal is stated in terms of this total increase. Considerations for demonstrating performance of each of these two factors are discussed in the following sub-sections. Detailed results and discussion for this objective are presented in section 3.2.1.3.

The objective was exceeded. Conservatively, the net increase in energy output for the same fuel input was 83.7 kW.

3.2.1.1 Energy Increase due to ORC Generator Output

ORC power output (kW) varies depending on heat input (generator load) and ambient temperature and can range over a factor of 2 from design conditions during normal operation. Achievement of the objective was evaluated from performance measurements made during baseline/intensive testing.

Test conditions for the demonstration generally followed ISO 3046 specifications for diesel engine performance testing, namely 77F annual average temperature, 110 feet elevation above mean sea level and 30% relative humidity. Design engine load was 900 kWe or approximately 85% of full load (1100 kW) in prime unlimited operation. 85% is a typical load value for MUSE deployments of similar engines. According to MUSE staff, such engines are seldom operated below 60% of full load and typically operate near full load for only brief periods.

The ISO temperature condition (77F) is representative of global mean temperatures in tropical latitudes. In temperate latitudes, mean annual temperature is lower and air-cooled ORC output is increased. However, in very hot climates (for example, Djibouti) ORC output will be reduced. The mean annual temperature at the deployment site for this demonstration (Guantanamo) is about 80 ºF. The mean annual temperature at the MUSE yard in Pt. Hueneme, CA is about 60 °F.

3.2.1.2 Energy Increase Due to Reduction in Cooling Load

The reduction in cooling load is achieved by:

- Replacing the KTA50's radiator with a high efficiency radiator driven by VFD controlled fans in place of the stock mechanically (PTO) driven radiator fan. This represents the bulk of the total reduction.
- The removal of heat from the engine's jacket water by the ORC engine that would otherwise be removed by the engine's cooling system, primarily the reduction in load on the radiator fan. In this application, this reduction is a relatively small portion of the total (a few kW).

Note that the contribution of direct ORC cooling is a fraction of the cooling load. This value is small in this application because the VFD controlled radiator is very highly efficient and because only about a third of the heat rejected in the jacket water is utilized in the final design (see section 5.3).

According to Cummins specifications, the stock radiator fan load for the KTA50 is 56 kW. The fan is mechanically driven and runs at a constant proportion of engine rotational speed, so the cooling load is fixed regardless of load conditions and varies only slightly with ambient conditions.

In the integrated system, the stock radiator was replaced with a high efficiency radiator with multiple VFD driven fans and the radiator fan load was largely removed from the engine's PTO. The cooling load design value for the replacement VFD controlled radiator fan is 2-4 kW as a function of load. A ventilation fan was mounted on the PTO to provide cooling and airflow to engine surface components. This fan consumes about 8 kW (by calculation).

The difference of approximately 44-46 kW from the baseline 56 kW specification represents the energy gain that may be realized due to employing the high efficiency radiator alone. Much of this gain is achieved simply due to the fact that the stock mechanical radiator/fan on the KTA50 is oversized to allow operation under worst case ambient conditions.

Southern quantified the energy gain from removing the mechanical fan load using precise fuel economy testing conducted before and after system integration. Southern completed a baseline fuel economy test on the unmodified engine over the range of expected operating conditions (700-1100 kW) on May 14, 2013 and then conducted fuel economy testing over the same range on the integrated system during the intensive tests completed on July 17, 2015. The difference in baseline and integrated system test fuel economy offset by the VFD controlled radiator fan load measures the energy gain due to removal of the radiator fan load from the engine PTO (see section 6.1 for details). As a corroborating measure, Southern compared power consumption for engine cooling on the VFD controlled radiator fan with the 56 kW Cummins fan load specification.

There are several factors that that were considered to properly evaluate the net system energy gain due to the reduction in cooling load. These include:

- Increase in after-cooler temperature
- Changes in ambient conditions between baseline and test measurements
- Changes in mechanical condition of the KTA50
- Changes in fuel composition

The potential impact of each of these factors is discussed in the following paragraphs. The test results are then summarized in section 3.2.1.3.

Increase in After-cooler Temperature

A factor that may work against the energy gain due to ORC cooling is that ElectraTherm increased the engine jacket water temperature from the baseline 180 F to 210F in order to maximize ORC power output. Cummins verified that this increase should not cause operability or significant maintenance issues; however, on the KTA50-G3 genset, the cooling water for the after-cooler is maintained at the same temperature as the jacket water (there is no separate cooling circuit for the after-cooler). Thus, intake air temperatures entering the combustion chamber may be increased resulting in a decrease in engine efficiency. According to Cummins performance engineering, this decrease should be 'slight'; however, Cummins declined to provide an estimate of the magnitude of the decrease.

This issue is specific to the KTA50-G3 and may not be a factor for engines where a separate, lower temperature after-cooler circuit is present. To address this concern, Southern determined total system efficiency over a range of jacket water temperatures from the baseline temperature (180F) to the ORC design temperature (210F). This allowed Southern to quantify the effect of increased intake air temperatures on genset fuel economy and to determine the optimal jacket water temperature in terms of

total system efficiency. Since, in the integrated system, the jacket water temperature is controlled via the bypass control valve, the temperature set point is easily changed in the field.

Changes in Ambient Conditions

A factor that has the potential to confound the genset fuel efficiency results is a change in ambient conditions between baseline and intensive testing. An increase in ambient temperature will reduce genset performance, as will a decrease in ambient pressure (both decrease intake air density). As both the baseline and intensive tests were conducted at the MUSE yard, near sea level, ambient pressure differences were expected to be insignificant. An ambient temperature difference of 15-20F between baseline and test conditions was possible.

Cummins performance engineering declined to provide information beyond the published de-rate curves for the KTA50, which are not useful to predict performance differences for small changes in ambient conditions.

According to formulas presented in an SAE paper on predicting diesel engine performance at various ambient conditions [4] a temperature difference of 15-20F is associated with a power output change of 1-2%, which is significant given the relatively small improvement in engine efficiency (roughly 5%) that is expected to be realized by removing the fan load. If it had been necessary, Southern would have used the SAE formulas to correct baseline power output to intensive test conditions so that a valid comparison would be made. As it happened; however, weather conditions were near-identical between the baseline and intensive test dates and no correction was necessary.

Changes in KTA50 Mechanical Condition

Although it is an older model engine (manufactured in 1998), the MUSE KTA50-G3 used in this demonstration had very low operating hours (< 5) prior to the demonstration. Prior to the acceptance and baseline testing, MUSE conducted a full service of the engine changing all fluids and filters. Southern verified with Cummins that there is no required break-in period for the engine and that engine performance should be stable between baseline and test conditions. Southern verified that all manufacturers recommended service was performed at the required intervals throughout the demonstration. Southern also analyzed engine oil and coolant samples taken during the intensive testing to verify that the increased jacket water temperature did not result in excessive oxidation or other degradation of the engine oil or coolant. Indications of mechanical wear are also provided by the oil and coolant analyses.

A related factor that could have had an impact on engine performance is that that ORC integration could increase the load on the engine's cooling water pump by increasing the friction head in the piping/radiator system. The performance impact of any such increase is accounted for in the baseline/intensive comparisons; however it was also important to verify that the friction head is not increased beyond specifications which could result in additional wear and tear on the pump. The Cummins specification for the KTA50-G3 is that the cooling water friction head should not exceed 15 psi. According to Cummins application engineering, typical pressure losses for the jacket water circuit are on the order of 2-4 psi. Southern monitored the pressure drop across the jacket water circuit to verify it remained within specification. ElectraTherm's design pressure drop in the jacket water loop was approximately 11 psi. The actual measured pressure drop in the integrated system was 5.7 psi. A booster pump added to the external jacket water loop was deemed unnecessary during commissioning runs as expected flow control was achieved.

Changes in Fuel Quality

Changes in fuel composition would also have an effect on engine performance. Fuel characteristics with the most important influence on engine performance include API gravity, cetane number and the presence of contaminants (water and bacteria/fungi). During the baseline test, Southern collected and analyzed

duplicate samples of the #2 diesel fuel that was used and sampling was repeated during the intensive testing to verify consistent fuel quality. Fuel quality was expected to, and did, remain consistent between baseline and intensive testing.

Note that F76 marine diesel was used to fuel the unit at Guantanamo. This change does not affect the analysis of the cooling load reduction as described above since #2 diesel was used in both the baseline and intensive testing and the cooling load reduction was determined based on baseline/intensive test results only.

The fuel change might have somewhat impacted the ability to directly compare field performance with baseline performance, but only in terms of the cooling load reduction – ORC output would not have been affected. In addition, as explained below (section 6.1.1), the change in deployment fuel could have had, at most, a very small impact on the cooling load reduction. Southern's conclusion was that the cooling load reduction determined during the controlled testing would be representative, independent of the fuel used when deployed.

Details of the measurements and calculations that were used to determine the increase in energy output are presented in section 6.1 of this plan.

3.2.1.3 Results and Discussion

Baseline Testing

Baseline testing of the unmodified genset was completed on May 14, 2013 at the MUSE yard in Pt. Hueneme, CA. The genset performed well with fuel consumption about 5 percent higher than nameplate values at design conditions (900 kWe load). In addition to fuel economy measurements, data were gathered during the baseline test to inform the integrated system design. These data included exhaust gas temperature and back pressure for the unmodified engine.

Controlled load testing of the fully integrated ORC/CHP system was subsequently conducted on July 17, 2015 at the MUSE yard at Pt. Hueneme, CA. The integrated 'intensive' test sequence included measurements at nominal 700/900/1100 kWe loads with the ORC offline followed by the same sequence with the ORC online. The test sequence was designed to capture the performance of the full system as well as the ORC and genset components separately. Details of the measurements conducted are provided in section 5.0. The integrated system performed as expected and there were no operational irregularities during the intensive test.

Fuel consumption and fuel economy data at nominal load conditions for the baseline and integrated system 'intensive' tests are presented in Table 3. To enable comparison, the results have been scaled to exact nominal conditions from (slightly varying) actual test conditions by linear interpolation. This approach is fully justified as the correlation between fuel consumption and power output was highly linear over the load range tested in all cases ($r^2 > 0.999$).

Table 3. Baseline and Integrated Test Fuel Consumption and Fuel Economy at Nominal Load Conditions

Nominal Load (kWe)	Measured Fuel Consumption (gph)	Measured Fuel Economy (kWh/gallon)
Baseline - Unmodified Genset Only		
700	54.5	12.8
900	67.0	13.4
1100	79.5	13.8
Integrated System - ORC Bypassed		
700	48.8	14.3
900	61.0	14.7
1100	73.3	15.0
Integrated System - ORC Online		
700	46.8	15.0
900	58.5	15.4
1100	70.2	15.7

As discussed above, decreases in fuel consumption or increases in fuel economy may be viewed as equivalent to increases in power output for a constant fuel input. Table 4 compares the baseline and integrated test results in these terms.

Table 4. Fuel Savings or Equivalent Additional Power at Nominal Load Conditions

Nominal Load (kWe)	Fuel Economy (kwH/gallon) Increase (%)	Fuel Consumption (gph) Decrease (%)	Equivalent Additional Power Output at Given Fuel Input (kW)
Savings Due to Reduction in Cooling Load Only (ORC bypassed) - vs. Baseline			
700	11.7%	-10.5%	81.9
900	9.7%	-8.9%	87.7
1100	8.4%	-7.8%	92.9
Total Savings (ORC Online) vs. Baseline			
700	16.4%	-14.1%	114.9
900	14.5%	-12.6%	130.2
1100	13.2%	-11.6%	144.9
ORC Only (ORC Online vs. ORC Offline)			
700	4.2%	-4.1%	29.5
900	4.3%	-4.1%	38.7
1100	4.4%	-4.2%	47.9

The results presented above for the reduction in cooling load were much greater than expected – exceeding 14% fuel economy improvement. As discussed above, the estimated reduction in cooling load was 44-46 kW at 900 kWe load, yet the test results show equivalent additional power of 87.7 kW at this load condition. This result prompted an investigation into the source of approximately 40 kW greater equivalent additional power output for a given fuel input than expected.

Factors that might affect the comparability of baseline and integrated system tests were all routinely investigated as discussed above.

- Increase in after-cooler temperature: There was no change in fuel economy performance at 900 kWe nominal load during the intensive test sequence at 180, 195 and 210 °F jacket water temperature.
- Changes in ambient conditions between baseline and test measurements: Fortunately, ambient conditions were near identical between the baseline and integrated system 'intensive' tests. Both tests were conducted on clear, sunny days at the same location near sea-level. Ambient pressure between the two tests varied by just 0.1 inch Hg (29.95 baseline vs. 29.85 integrated). Average ambient temperature differed by just 3.5 °F (64 baseline and 67.5 integrated). On this basis, it was decided that no corrections for ambient conditions were warranted as uncertainties in the corrections were very likely to be much higher than any performance change due to the very small differences in ambient conditions.
- Changes in mechanical condition of the KTA50: All required maintenance (oil, coolant and filter changes) were completed immediately prior to the baseline and intensive tests. Oil and coolant analyses on samples collected during the integrated tests showed no abnormalities. Jacket water pump head (5.7 psi) in the integrated system was well under the Cummins specification of 15 psi and the ElecTratherm estimate of 11 psi.
- Changes in fuel composition: Fuel samples were collected and analyzed during both the baseline and integrated tests. Differences in API gravity and calculated heating values were less than 1%. The baseline fuel cetane value was only slightly higher than that for the integrated test fuel (52.5 vs. 51.4). Water, bacteria and fungi were non-detect for all samples.

In addition to these planned experimental controls, several additional factors that might have accounted for the differences observed were identified and investigated following the tests. Assistance with this investigation was obtained from Cummins applications engineering and Woodward controls engineering.

- The PTO driven radiator fan load may have been greater than the 56 kW given in the Cummins specifications. Cummins was unable to provide test data documenting the 56 kW specification but did not feel it was likely that the baseline radiator fan load could have significantly exceeded this value.
- The load on the jacket water pump may have been somewhat reduced as evidenced by the measured pump head in the integrated system (5.7 psi) being lower than the Cummins specification (15 psi). Since the pump head was not measured during the baseline test, this conjecture is unverifiable, but would account for no more than a few kW additional savings at most.
- The engine controls were changed from the baseline Cummins PCC3100 to Woodward EasyGen on the integrated system. This change was initiated by the Navy per current policy. Could the Woodward controls operate the engine more efficiently? Similarly, power metering during the baseline test was via the PCC3100, and via the EasyGen controller during the integrated test. It is possible that the CTs may have been changed as well. According to a Woodward controls engineer, the total effect of these factors might account for only 1-2 percent difference in fuel economy (or no more than about 9-18 kW), assuming that the errors were all toward greater power savings, which seems unlikely. Per the demonstration plan, the genset power output during the integrated test was verified to be accurate using a Megger PA9 with good agreement.
- The same Krohne coriolis mass flow meters were used to measure fuel consumption during both tests and were plumbed in the same configuration with the same meter measuring supply and return

fuel flows respectively. The meters were securely stored and had not been used for any other purpose during the time intervening between the two tests. There is no periodic recalibration requirement documented for these meters.

No other reasonable explanations for the discrepancy were identified by Southern, ElectraTherm, Cummins or the Woodward engineer. Since the measured reduction in cooling load may appear uncertain given the unexpected magnitude, Southern feels that the final results claimed for the reduction in cooling load should be reported based on the demonstration plan estimate of 44-46 kW (nominally 45 kW) as developed in section 3.2.1.2 above. Percentage fuel economy savings are likewise reported in equivalent terms. These conservative results, and associated uncertainties (one sigma) based on propagation of measurement error and test statistics determined per the demonstration plan are given in Table 5.

Table 5. Conservative Savings at Design Conditions (with 45 kW Reduction in Cooling Load) with Propagated Uncertainty

Nominal Load (kWe)	Fuel Economy (kwH/gallon) Increase (%)	Fuel Consumption (gph) Decrease (%)	Fuel Consumption Decrease (gph)	Equivalent Additional Power (kW)
900	9.3%	-8.1%	5.44	83.7
Uncertainty (+/-)	0.65%	0.57%	0.39	7.9

3.2.2 Increase Integrated Power System Efficiency

At first consideration, ORC integration can be simply thought of as increasing the output of the power system while fuel consumption remains constant. In this case, the percentage efficiency gain is readily conceived of as the ratio of the total power increase due to ORC integration (as defined in section 3.2.1 above) to the KTA50 power output .

In this instance, the 83.7 kW increase in energy output due to ORC integration as presented in section 3.2.1 above can readily be viewed as a 9.3% *{1-(900+83.7)/900)*100}* percent increase in integrated system efficiency (or fuel economy), but reporting this efficiency gain requires some additional consideration.

In the normal operating scenario, the power system output will follow the installation demand. For example, if the installation demand is 900 kW and the ORC generates 50 kW net, then the KTA50 will throttle back to produce approximately 850 kW so that the total load on the system remains at 900 kW. This example neglects the fact that ORC output would be somewhat reduced at the lower engine load (due to lower exhaust mass flow and jacket water heat rejection), so that the actual KTA50 load would be somewhat more than 850 kW. This is, in fact, the scenario decided upon by power plant operators at GTMO where the power plant would take a constant 900 kWe load from the demo unit.

A more representative characterization of the efficiency gain that fits the normal operating scenario is the decrease in KTA50 fuel consumption between the installation demand load and the reduced KTA50 load due to ORC integration as a percentage of the fuel consumption at the demand load. Details of the measurements and calculations used to determine integrated power system efficiency in this manner are presented in section 6.2 below.

Note that the efficiency calculations described in section 6.2 are based on baseline/integrated fuel economy measurements, which, as discussed above, may overstate efficiency improvements due to the higher than expected measurement of the reduction in cooling load. Based on the measured data, the overall system efficiency (fuel economy) gain is 14.5% at 900 kWe nominal load. Per considerations presented above (see section 3.2.1.3), the conservative efficiency gain is considered to be 9.3% at 900 kW

load. As the 5% demonstration objective was to be evaluated relative to the nominal (900 kWe) load condition, the objective was met.

3.2.3 Determine ORC Efficiency

Since waste heat is used to power the ORC and otherwise unused waste heat is free of cost, the efficiency of the ORC would not normally be a primary concern of end-users. That said, in order to fully characterize the performance of the ElectraTherm ORC and provide comparative information on system performance for DoD energy managers and other interested parties, Southern monitored the net heat input and energy output of the ORC to determine the thermal electrical efficiency of the system. Heat input is the sum of heat input from the jacket water and exhaust gas heat exchanger circuits and is determined from the flow rate, density and heat capacity of the heat transfer fluids and the temperature differential across the heat exchangers in each loop.

Typical ORC engine efficiency ranges from 5-15%, depending largely on the quality (temperature) of the heat source. Based on ElectraTherm's bench testing and thermodynamic modeling, the internal efficiency of ORC engine in the DoD system is expected to range from 7.0 to 9.0 percent depending on engine load and ambient conditions. Net ORC efficiency, including all parasitic loads is expected to range from 5.9 to 6.8 percent. TORQUE model results are expected to be conservative, so greater internal efficiency may have been realized under test. The success criteria were based on the expected results.

Per the demonstration plan, ORC efficiency was to be reported on an integrated basis over a range of characteristic operating conditions encountered during the deployed testing (e.g., engine load and ambient conditions). In addition, the cooling load for the ORC was to be determined in the same manner as the heat input. These data would have allowed for determination of an energy balance across the ORC which provides a check on the quality of the efficiency determination. Details of the measurements and calculations that were planned to determine ORC efficiency are presented in section 6.3 of this plan.

Due to the commissioning issues at deployment, data were not available to determine efficiency per the demonstration plan. An effort was made to determine ORC efficiency based on the integrated test data; however, there was not enough run time during that test to accumulate sufficient steady state data at nominal operating conditions to support a reliable energy balance across the ORC necessary to determine ORC efficiency.

3.2.4 Verify Availability, Reliability and Operability

ElectraTherm's current fleet about 50 of ORC units operating in the field recently surpassed 520,000 hours of operation at over 97% availability. Availability and Reliability were not quantitatively determined during the demonstration due to the failure to commission the unit for long term monitoring at the deployment site (GTMO).

During operator training and limited operations during commissioning activities at GTMO, there were no operability issues. After training and hand's on demonstrations, on site operators at GTMO quickly grasped the monitoring, operations and maintenance requirements of the system. Once the generator comes on line, the ORC waits for heat to become available and then starts automatically. A red light is displayed on the ORC panel when the genset is not operating. Once the generator set comes online, a yellow light indicates that the ORC is waiting for the jacket water and EGHX loops to come up to temperature. A green light then indicates that the ORC is online and generating power. Flow readouts are conveniently located to allow the operator to verify jacket water, exhaust gas, and cooling loop flows. Routine maintenance involves little more than lubricating the pumps with a grease gun. A full maintenance schedule and detailed operating manual were provided for longer term maintenance. The GTMO operators appeared to find all of this very easy to grasp and expressed full confidence in their ability to operate the system following the training provided.

Availability is a quantitative metric that is given as the percentage of time that the system is either operating or capable of operation. The data requirements are time stamped ORC power production data and operational logs providing details of the causes and circumstances for each period when the ORC is not producing power.

Reliability is both a quantitative and qualitative metric that assesses the robustness of the system in terms of likelihood of failure or operational problems, the consequences of such problems, and the ability to recover. Reliability would have been assessed quantitatively in accordance with ANSI Standard 762 which uses a specific categorization of operating and downtime hours and provides a standard formula for calculating availability and reliability based on this categorization.

Reliability was also assessed qualitatively based on the operating experience of project participants (including Southern Research, ElectraTherm, MUSE and deployment site commanders and operators). Operating experience would have been documented with reference to operations logs, weekly status updates, monthly status summaries, participant communications, meeting minutes, and formal and informal interviews with project participants.

Operability is a qualitative metric that is based on operating experience as documented by interviews with operators and project participants during and at the conclusion of the project.

Due to early termination of the field portion of the demonstration, availability, reliability and operability are considered un-demonstrated.

Details of the methods that would have been employed to verify availability, reliability and operability are presented in section 6.4 of this plan.

3.2.5 Evaluate System Economics

To be economically viable, the value of the power produced by the ORC and the cooling capacity offset by ORC integration must offset the capital, operating and maintenance costs of the ORC over a reasonable period of time. In this demonstration, the value of the power produced is most appropriately stated in terms of the cost of diesel fuel required to generate an equivalent amount of power. Diesel fuel costs can be very high in remote installations and forward operating bases.

The metrics used are standard indicators of economic performance including the simple and discounted payback period, life cycle net savings, adjusted internal rate of return (AIRR) and savings to investment ration (SIR). These indicators are determined from the initial capital and incremental operating and maintenance costs for the integrated system, offset by the value of the diesel fuel saved due to the electric power produced by the ORC over the lifetime of the system.

For the purpose of the economic analysis, the capital cost of the KTA50 genset is considered to be a sunk cost and is not accounted for. In any case, the capital and O&M cost of the KTA50 is the same for the baseline and integrated system test cases, so zeros out in the LCCA results.

The success criterion is that the simple payback period should be less than 5 years. This result is achievable at fuel prices exceeding about $3.00/gallon. The payback could be much faster if the fully burdened cost of fuel at remote installations and FOBs is used.

Projected system economics based on ORC performance testing and actual capital and O&M costs are presented in section 7.0 of this report.

3.2.6 Determine GHG Emissions Reductions

GHG emissions reductions were determined based on the equivalent emissions from stationary source diesel fuel combustion that are offset by the ORC energy output and engine cooling energy savings.

Preliminary calculations indicated that GHG reductions based on ORC power output only would exceed 200 metric tons CO2e per year so that figure was adopted as the success criterion. The actual GHG reduction based on baseline and integrated test data including the effect of the reduction in cooling load was 464 metric tons CO_2e per year. This figure assumes on 95% system availability. Based on ElectraTherm's fleet operating experience, ORC availability is expected to exceed 97 percent; however, maximum availability for the KTA50 genset is 95 percent due to maintenance requiring approximately 1.5 days per month engine downtime.

Data requirements are the fuel savings (gallons/hour) due to ORC integration, operating hours per year, and current EPA GHG emission factors and global warming potentials (GWPs) for methane and N_2O. Details of data collection and analysis to determine GHG reductions are provided in section 6.6.

4.0 FACILITY/SITE DESCRIPTION

Following initial commissioning and controls optimization in Reno, Nevada, the integrated ORC-genset system was first demonstrated during intensive testing at the Navy MUSE facility in Port Hueneme, California and then deployed to US Naval Station Guantanamo Bay (GTMO) for longer term evaluation under field conditions. The deployment site was selected by MUSE based on their customer requirements and demonstration site selection criteria. The mission of MUSE is to provide mobile diesel engine driven generators and electrical substations to meet utility shortcomings for the Department of the Navy and Department of Defense, as well as other federal activities. The MUSE facility at Pt. Hueneme is equipped with a high capacity load bank that provided precise controlled loads during intensive testing as well as shop facilities, machinery, tools and personnel to facilitate testing as needed.

The Navy Auxiliary Landing Field on San Clemente Island (NALF-SCI) was initially proposed as a demonstration site for the extended testing. Southern and ElectraTherm conducted a site visit to NALF-SCI in May 2012. During this visit, it was determined that the configuration of the power generating facility at the site was not suitable for a demonstration due to the irregular rotation cycle among the four generators in use, and the difficulty of effectively capturing the waste heat for use by the ORC engine.

Subsequent to the SCI visit, it was discovered that MUSE had possession of an unused 1.2 MW Cummins KTA50 diesel genset that could be made available for the demonstration. The KTA50 was manufactured in 1998, but had accumulated less than two operating hours prior to the demonstration and was in new condition. ElectraTherm proposed to design a packaged ORC system around the KTA50 that could easily be deployed as required. This strategy was adopted for the demonstration as it met the needs of MUSE and provided deployment flexibility as well as wider- DoD applicability. With the packaged system, it is unnecessary to find a suitably configured deployment site as the integrated system is deployable as and where needed.

As with the generator sets currently deployed by MUSE, the packaged ORC-genset integrated system may be deployed wherever there is a need for the power. A limitation specific to the KTA50 provided gratis for this demonstration is that it is an older model genset predating the NSPS emissions requirements and the engine be certified to Tier 4 emissions control requirements now necessary for deployment within most areas of the United States.

For more than a year, Southern worked with MUSE to identify suitable candidate sites for the demonstration. MUSE required that they would be the point of contact for all discussions with candidate sites and all communications were conducted through MUSE. The intent was that MUSE would select the deployment site in response to the regular needs of their customers. However, due to the un-tested nature of the technology and few customer requests for this type of equipment over the search period, MUSE found that it had to offer incentives to potential sites in order to secure participation. MUSE offered a 1-year no cost lease of the equipment. In addition, MUSE requested that Southern/ESTCP help defray the cost of installation and consumables that would normally be borne by the site.

Six candidate sites were identified. A discussion of the relative merits of the six candidate sites is available in the site selection memorandum approved by ESTCP for this demonstration. The site selection memorandum also provides complete GTMO-specific details for technical, logistical, organizational, and economic factors that could impact the success of the demonstration.

4.1 FACILITY/SITE LOCATION AND OPERATIONS

The Naval Station at Guantanamo Bay (GTMO) was selected as the deployment site as it met all of the selection criteria, held the highest level of interest in the demonstration from facility command and public works staff and is in close proximity to the continental US. In short,

- GTMO has demonstrated a high level of interest in the demonstration as it coincides with their efforts to reduce fuel costs at the installation.

- The power demand at GTMO is more than sufficient (12-21 MW) and GTMO is able to provide 24/7 operation over sufficient operating hours to fully demonstrate the performance of the system.
- GTMO will provide F76 marine diesel fuel to operate the unit. The use of F76 is not expected to have any negative operational consequences for the genset. Southern evaluated the impact of the use of F76 on the demonstration plan (see section 6.1.1) and concluded that the use of F76 versus #2 diesel will have no significant consequences with regard to achieving and fully verifying demonstration objectives.
- Site preparation at GTMO was minimal as there are existing concrete pads and other necessary infrastructure at GTMO remaining from decommissioned MUSE generators that was utilized.
- MUSE obtained assurances from GTMO and MUSE security that Southern and ElectraTherm had access to the site for installation, commissioning, and data collection. MUSE assisted with coordinating travel, lodging, etc.
- Data access was accomplished via remote connectivity using a secure line provided by the ISP at GTMO (SCSI) and, as a backup, regular download from the ORC PLC and email transfer. GTMO will modify the scope of work for their on-site operations and maintenance contractor to ensure that data transfers are completed as required.

Figure 4 shows the location of the ORC installation on MUSE pads 3 and 4 at the main GTMO power plant. Figure 5and Figure 6 are photographs of the equipment installed at GTMO.

Figure 4. GTMO Installation Site

Figure 5. ORC and Genset Installation at GTMO

Figure 6. ORC Unit Installed at GTMO

4.2 FACILITY/SITE REQUIRED CONDITIONS

The packaged ORC-genset system is designed for deployment at any location where there is sufficient continuous power demand (greater than about 600 kW for the configuration demonstrated). Such locations include fixed bases in remote locations, forward operating bases, and deployments for disaster relief or other federal activities.

For the purpose of the demonstration, a site must:

- have a definite interest in participating in the demonstration
- have the ability to commit sufficient resources in support of the demonstration
- provide reasonable access for demonstration personnel to install and service equipment and collect data
- *not* have prohibitive regulatory, economic or other barriers

In addition, very remote sites were considered generally unsuitable for the demonstration due to high transportation costs and limited access. Finally, as mentioned above, deployment of the KTA50 was limited to where EPA NSPS stationary diesel emissions standards do not apply or may be temporarily waived. This latter restriction, of course, does not apply to the ORC.

Specific MUSE siting criteria for diesel genset deployments include the following:

- Site provides drainage away from the plant.
- Provision of adequate electrical grounding.
- Provision of fire protection equipment as required by local regulations.
- Support personnel including one mechanic and one electrician.
- Adequate support of the plant is required. The surface should be smooth, level, firm, and not settle with time.
- The plant shall not be located within ten feet of any other plant, building or obstruction.
- The clearance at the radiator discharge shall not be less than 40 feet.

Hearing protective devices should be worn within 50 feet on all sides of the plant. This should be considered when locating near offices, housing developments, and other concentrated personnel areas.

4.3 SITE-RELATED PERMITS AND REGULATIONS

As the ORC has no emissions, no waste, small footprint and operates quietly there are few, if any, *additional* permitting requirements beyond those for the waste heat generating system with which it is integrated. When, as in this demonstration, waste heat from exhaust gases will be utilized by the ORC, the exhaust gas heat exchanger (EGHX) must be certified in accordance with applicable boiler or pressure vessel codes. In the US, and much of the world, the ASME International Boiler and Pressure Vessel Code (BPVC) is the basis of local standards. In European countries, the Pressure Equipment Directive (PED) applies. The EGHX to be employed in the demonstration is manufactured by a European company (Aprovis) and is certified to meet both PED and ASME standards.

There are a number of permitting requirements for diesel generator set installations that may be applicable depending on the location. Beginning in 2014, EPA NSPS require stationary diesel engines to meet Tier 4 final emissions levels. More stringent requirements may be applicable per state or local requirements. Installations of stationary diesel generators must also meet State and local building codes. Municipal planning/zoning codes or other local ordinances may also limit the location of diesel generators or impose certain requirements.

Diesel generator installations must also comply with safety codes including the following:

- NFPA 37 - Stationary Combustion Engines and Gas Turbines
- NFPA 30 - Flammable and Combustible Liquids Code

- NFPA 70 - National Electrical Code (NEC)
- NFPA 110 - Emergency and Standby Power Systems

For MUSE deployments, the NEC and any local requirements must be met as well as applicable requirements of the Unified Facilities Criteria Program (UFC) and the USACE Safety and Health Requirements Manual (EM385-1-1).

For the GTMO deployment, there are no required permits or regulatory requirements beyond the MUSE requirements specified above.

5.0 TEST DESIGN

The demonstration was designed to provide data as required to fully evaluate project objectives as stated in section 3.1 and provide additional information as needed to ensure the quality and representativeness of these data. The plan to accomplish this is presented in detail in the following sections.

5.1 CONCEPTUAL TEST DESIGN

The hypothesis under test is that ORC-genset integration will increase the effective genset power output by at least 50 kW (or improve fuel economy corresponding to the same power output) using waste heat from the genset without placing an undue burden on operations compared to operating the genset alone. The independent variable is the addition of the ORC to utilize the waste heat from the genset. In addition to the direct ORC power output, ORC integration will also result in a reduction of the cooling load on the engine, which acts to further increase the effective power output or fuel savings.

The dependent variable is the increase in effective power output or fuel economy. Load and ambient conditions will affect the ORC power output. These are site and time specific variables that are uncontrolled except to the extent that a suitable site must have sufficient load to operate the genset at a minimum of 60% of the rated output (1100 kW) in prime unlimited service. The genset will not operate efficiently at loads lower than 60%.

Controlled variables include the operating condition of the genset and the consistency of the quality of the fuel used between the baseline and intensive testing. Routine maintenance of the genset per manufacturer specifications is important for the demonstration so that measured fuel economy changes are clearly attributable to ORC integration and not a change in engine performance. Monitoring of engine operating parameters and fuel, oil and coolant samples was used to verify consistent engine performance during both the intensive testing and deployed phases of the demonstration. Consistency of the fuel quality was especially important between the baseline and intensive tests to ensure the reliability of the results for the performance improvement due to the reduction in cooling load.

At a minimum, all that is necessary to demonstrate the performance of the ORC is to monitor the power output of the ORC and generator set and compile and analyze operational and economic data. In addition to these basic requirements, the following additional determinations were made:

- The increase in genset efficiency due to the reduction in cooling load provided by ORC integration was quantified by measuring the difference in baseline and integrated system fuel economy over a representative range of controlled load conditions.
- The heat input to the ORC was measured so that ORC system efficiency could be determined. Heat removal from the ORC was also monitored to establish an energy balance for the system.
- Ambient conditions were monitored in order to characterize changes in ORC and generator set power output with varying temperature, humidity and barometric pressure. These data were also used to establish comparability of baseline and integrated system fuel economy measurements.

- Selected KTA50 operating parameters were monitored as an indication of generator set 'health' and operational status (i.e., normal operation). Fuel, oil and coolant analyses were conducted during intensive testing and at regular maintenance intervals (approximately every 500 hours operation) as further indicators of generator set 'health'.

In the initial design phase of the demonstration, ElectraTherm conducted modeling and bench testing to optimize ORC/genset integration in an effort to maximize the use of waste heat from the KTA50 and ORC power output. In this phase, ElectraTherm also designed the packaged system layout and configuration with the goals of facilitating deployment, meeting Navy packaging requirements, and providing for safety and ease of use. A preliminary design review was completed by ElectraTherm, Southern and MUSE on June 6, 2013. A 'final' design review was completed on November 4, 2013; however, additional design changes were made in 2014 to allow for a single radiator to be used for both the ORC and genset. This change lowered costs and increased deployment flexibility as a second high efficiency radiator for the engine was no longer required. The final 'final' design review and approval was completed June 17, 2014 following the site survey visit to GTMO.

Concurrent with the design phase, Southern conducted acceptance testing and baseline fuel economy testing of the KTA50 under controlled load conditions at the MUSE facility in Port Hueneme, CA. Once the design was near completion, Southern began preparation of the demonstration plan and specification, evaluation and selection of monitoring instrumentation and data acquisition systems.

The second phase of the demonstration involved generator set packaging, ORC integration, and commissioning. During this phase, Southern stayed abreast of all developments, compiled and reviewed system component specifications, and documented progress and issues encountered.

Once the system was assembled and initially commissioned in Reno, intensive testing under controlled load conditions was conducted at the MUSE facility in Port Hueneme, CA on July 17, 2015. During intensive testing, the system was connected to a load bank to provide stable and precise load conditions over the normal operating range of the system (700-1100 kWe). Fuel economy measurements were made to quantify generator set efficiency gains due to the reduction of the cooling load provided by ORC integration.

Longer term monitoring of integrated system performance in an actual deployment comprising approximately 2000 total hour's operation was planned for the final phase of the demonstration. Given the typical generator rotation schedule at the selected deployment site (Guantanamo Bay Naval Station), 2000 hours represents approximately one full year of operation.

Due to commissioning issues encountered at GTMO (see section 8.0), the deployment was terminated early and the long term monitoring portion of the demonstration plan was not completed.

5.2 BASELINE CHARACTERIZATION

Initially, Southern considered that the baseline characterization would consist simply of an acceptance test of the KTA50-G3 genset to verify operation within Cummins specifications and obtain engine-specific data on exhaust gas and jacket water temperatures that would be used to inform the integrated system design. Southern and ElectraTherm conducted the acceptance test at the MUSE facility on February 6, 2013. An additional goal of the acceptance test was to gather information on packaging requirements as practiced at MUSE.

At the time of the acceptance test, Southern was aware of the planned improvements to the radiator (see section 3.2.2 above) and the additional cooling benefit of the ORC; however, information available from the Cummins specification sheet for KTA50-G3 indicated that the total radiator fan load was only 36 kW. Based on extensive prior experience with fuel economy measurements on large diesel engines, Southern did not feel that the reduction in cooling load could be reliably measured in terms of an increase in fuel economy, so planned to estimate the ORC cooling benefit based simply on the difference between the

specified PTO driven radiator fan load and the VFD radiator fan power consumption in the integrated system (which ultimately came to pass due to early termination of the deployed testing).

In the following weeks, Southern learned from Cummins' application engineering that the actual PTO driven fan load is expected to be 56kW. At the same time, early results from ElectraTherm's modeling efforts suggested that net ORC output for the optimized design would be lower than the working estimate of 75kW. With the larger fan load, the increase in fuel economy now appeared to be in the measureable range, and with the smaller ORC output, the ORC cooling benefit now appeared to be a larger proportion of the total efficiency gain. It was therefore determined that baseline fuel economy measurements would be of value to the demonstration.

Southern returned to Port Hueneme and conducted a baseline fuel economy test on May 14, 2013. Fuel supply and return flows were measured with coriolis mass flow meters (Krohne Optimass 7000), nominally accurate to ±0.1% of reading and with calibration certificates showing uncertainty of ±0.035%. The total uncertainty in the difference in supply and return fuel flows was calculated at ±0.12% based on the variation in the data collected.

Fuel economy data were taken over a range of load conditions spanning the normal expected load for MUSE deployments (85%). The nominal load values for the baseline test were 700, 900 and 1100 kW or 64-100% of rated load in prime unlimited service. The genset performed well during baseline testing with measured fuel economy within 5 percent of rated consumption.

Duplicate fuel samples were obtained from a fresh fuel fill and analyzed by Titan laboratories for API gravity, cetane number, sulfur and contaminants (water and bacteria/fungi). Titan also provided the heating value of the fuel. The fuel quality met API standards. The baseline fuel analysis results were later compared with intensive test fuel analyses to verify the consistency of the fuel supply.

5.3 DESIGN AND LAYOUT OF TECHNOLOGY COMPONENTS

During the design phase, ElectraTherm conducted modeling of integrated system performance and bench testing of system components. The design intent was to maximize ORC power output by optimizing the utilization of waste heat from the KTA50 genset and minimizing parasitic loads. ElectraTherm initially presented their thermodynamic and physical design to Southern and MUSE in a web conference held on June 6, 2013. Subsequent design review meetings were held in Novermber 2013 and June 2014 reflecting updates in the system design to better meet performance and/or economic goals. ElectraTherm provided Southern with full details of the design process and results in monthly reports to Southern, and frequent emails and teleconferences.

Prior to the commencement of Phase II construction work, ElectraTherm submitted and Southern reviewed a complete design package consisting of a piping and instrumentation diagram (P&ID), process flow diagram (PFD), control specification, piping layout, and packaging specifications. The P&ID and PFD drawings are presented in Appendix B.

A key component of the design was to utilize the higher temperature waste heat from the KTA50 exhaust in the ORC's evaporator loop while utilizing the lower temperature heat from the engine's jacket water in a separate preheater loop. In existing GM4000 installations, the same heat source is used in both the preheater and evaporator, so this effort represents a new capability for ElectraTherm.

The design effort included modeling and bench testing of key ORC system components including the evaporator and preheater heat exchangers, the exhaust gas heat exchanger, the expander, generator and condenser. This effort resulted in detailed specifications for each component.

ElectraTherm has developed and continues to refine a proprietary thermodynamic system model (known as the TORQUE model) that is used to predict ORC performance in various application scenarios and to optimize component selection to maximize thermal efficiency and power output and minimize parasitic

loads for optimal overall system performance. The model is based on thermodynamic principles and theoretical analysis coupled with empirical bench testing and performance data acquired from the existing fleet of GM4000 machines. ElectraTherm maintains an in-house bench testing apparatus that is used to obtain empirical data for various system components and configurations.

In ElectraTherm's final design, all of the available high grade heat from the exhaust gas is utilized, but only about 20% of the jacket water flow is passed through the preheater (capturing about 30% of the available heat in that circuit). On the surface, it might appear that this arrangement does not fully utilize the available heat; however the preheater brings the working fluid to within 1-2 °F of the jacket water temperature, so no further heat capture is thermodynamically possible. This fact is illustrated in the temperature-entropy (Ts) diagram shown in Figure 7.

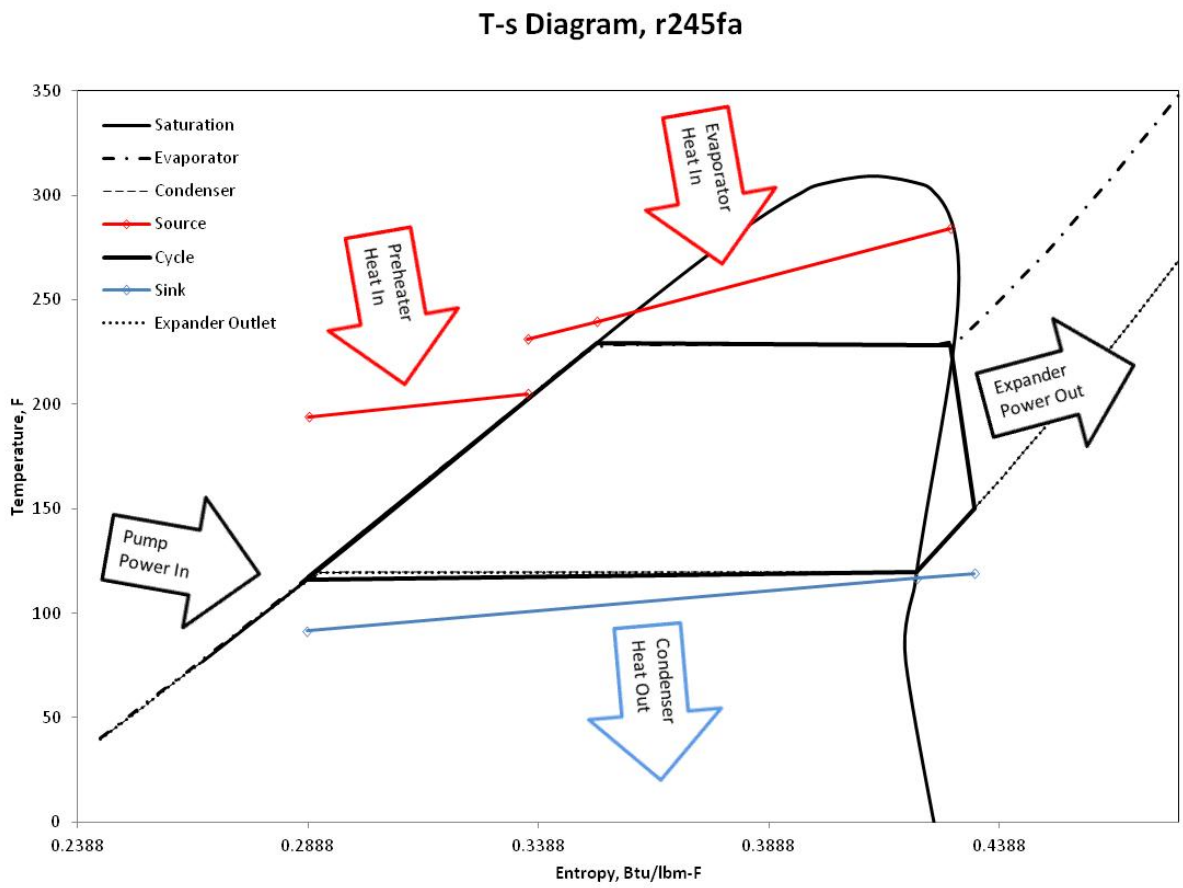

Figure 7. Temperature-Entropy Diagram for ElectraTherm's SRI/DoD ORC Design

During the design phase, multiple TORQUE model iterations were conducted to evaluate the optimum utilization of waste heat from the jacket water and exhaust of the KTA50. In these model runs, the waste heat capture from the exhaust gas was maximized and held constant and the expander speed and jacket water temperature and flow were varied. Maximum ORC power output was taken as the primary design goal. Expander sizing and other component selections were made based on this design goal.

An alternative design goal might have been to maximize total effective power output including the reduction of cooling load on the engine. If this were the goal, it may have been possible to utilize all of the waste heat in the jacket water, increasing the effective power gain. However, in this instance, the model shows that ORC generator output would be sacrificed and the further reduction in cooling load would not offset this loss.

As part of the design effort, ElectraTherm evaluated the performance of a new, 163mm expander which is capable of greater torque output for the same rotational speed as the 127 mm expander used in the GM4000. The result of this evaluation was that the 127mm expander actually provided better overall performance in the KTA50 application and the 127 mm expander was initially proposed for the demonstration. The 163 mm expander evaluations provided data essential to TORQUE model refinements that allowed for more accurate characterization and optimization of the KTA50-integrated design. These results will also be of value in future applications with different engines that DoD may be interested in deploying as ORC-integrated systems. All that said, prior to the final design review, ElectraTherm learned that by employing a variable inlet, optimum results could be achieved using the 163mm expander. As the 163 mm expander is more robust, it was decided to use the 163 mm expander in the final design.

The EGHX performance, sizing and control were also evaluated as part of the design effort. Under normal operations, diesel engine exhaust will quickly foul the heat exchanger, thus the normal operating scenario is the fouled case which fixes evaporator sizing and heat capture. In the clean case, it is possible for the evaporator to lower the exhaust gas temperature to the point where the exhaust gas condenses. The condensate is corrosive and will degrade the component lifetime, so condensation must be avoided. Since the ORC evaporator can remove only a fixed amount of heat, a larger portion of the EGHX loop flow is bypassed during clean case operation to maintain the exhaust gas temperature above the condensing temperature (180 °C). The bypass flow is controlled by a flow control valve set to maintain the exhaust gas temperature above this point (see P&ID diagram in Appendix B).

A liquid loop radiator (LLR) was employed to reject heat from the ORC and genset. An alternative ORC condensing configuration involves passing the working fluid directly through the condenser as opposed to transferring the heat to an external water loop. This configuration avoids the need for an additional pump to circulate the cooling fluid; however, there are number of advantages to the LLR configuration.

- A much smaller volume of refrigerant is required for the LLR option and thus installed cost, as well as installation and maintenance cost, are reduced.
- Direct condensing requires that the condenser be located above the ORC to allow drain back, which complicates packaging and deployment.
- The direct condenser must be larger than a liquid loop radiator to avoid excessive pressure drop that would impact ORC performance – further complicating packaging and deployment. The larger condenser would also require additional cooling fans, increasing parasitic load.
- A very low pressure drop brazed plate condenser is used with the LLR configuration, so there is little, if any, sacrifice in ORC efficiency.

The additional parasitic load for the extra pump required in the LLR configuration (2.8 kW) is more than offset by the improvements in packaging, installation and maintenance.

In the final design, the LLR will also be used to reject heat from the KTA50, eliminating the need for a separate radiator for the engine. The advantages of this approach include significantly lower cost and simpler installation. The tradeoff is that, if the engine/EGHX container is to be used alone as a CHP unit (without the ORC) a radiator will have to be provided to reject heat from the engine.

The final design calls for an air cooled condenser (dry cooler). This option has no water consumption which is a benefit for deployment in areas with limited water supply. However, in areas with very high ambient temperatures and moderate humidity, an evaporative cooler (cooling tower) would be more efficient and result in greater ORC output – provided that a sufficient water supply is available. ElectraTherm estimates that the evaporative cooling option would consume 10 gpm on a continuous basis, accounting for evaporative losses, maintenance blow downs and other periodic losses. A dry cooler was used for this demonstration.

5.3.1 System Layout

The integrated ORC/genset system is housed in two standard 40 foot ISO shipping containers for ease of deployment. The first container houses the genset, switchgear, fuel supply, and EGHX. The second container houses the ORC generator and dry cooler. The two containers may be deployed as an integrated ORC/genset or the genset container may be utilized as a stand-alone combined heat and power (CHP) system (using an external radiator) and the ORC container may be utilized as a standalone ORC system that could be utilized with any suitable hot water supply.

The dual configuration also allowed for expedited construction activities as work on the ORC/condenser container at ElectraTherm's facility in Reno proceeded in parallel with work on the engine/EGHX container at the packaging location in Denver, CO. Field setup is straightforward. All that needs to be done when the equipment arrives on site is to make electrical connections and connect supply and return hot water piping between the containers, fill the EGHX circuit with water and the jacket and condenser water circuits with water/glycol mix. The refrigerant is completely contained within the ORC unit and may be shipped in place.

Figure 8 shows a perspective view of the engine/EGHX (CHP) and ORC containers, identifying major components and piping connections.

Figure 8. Engine/EGHX Container Layout

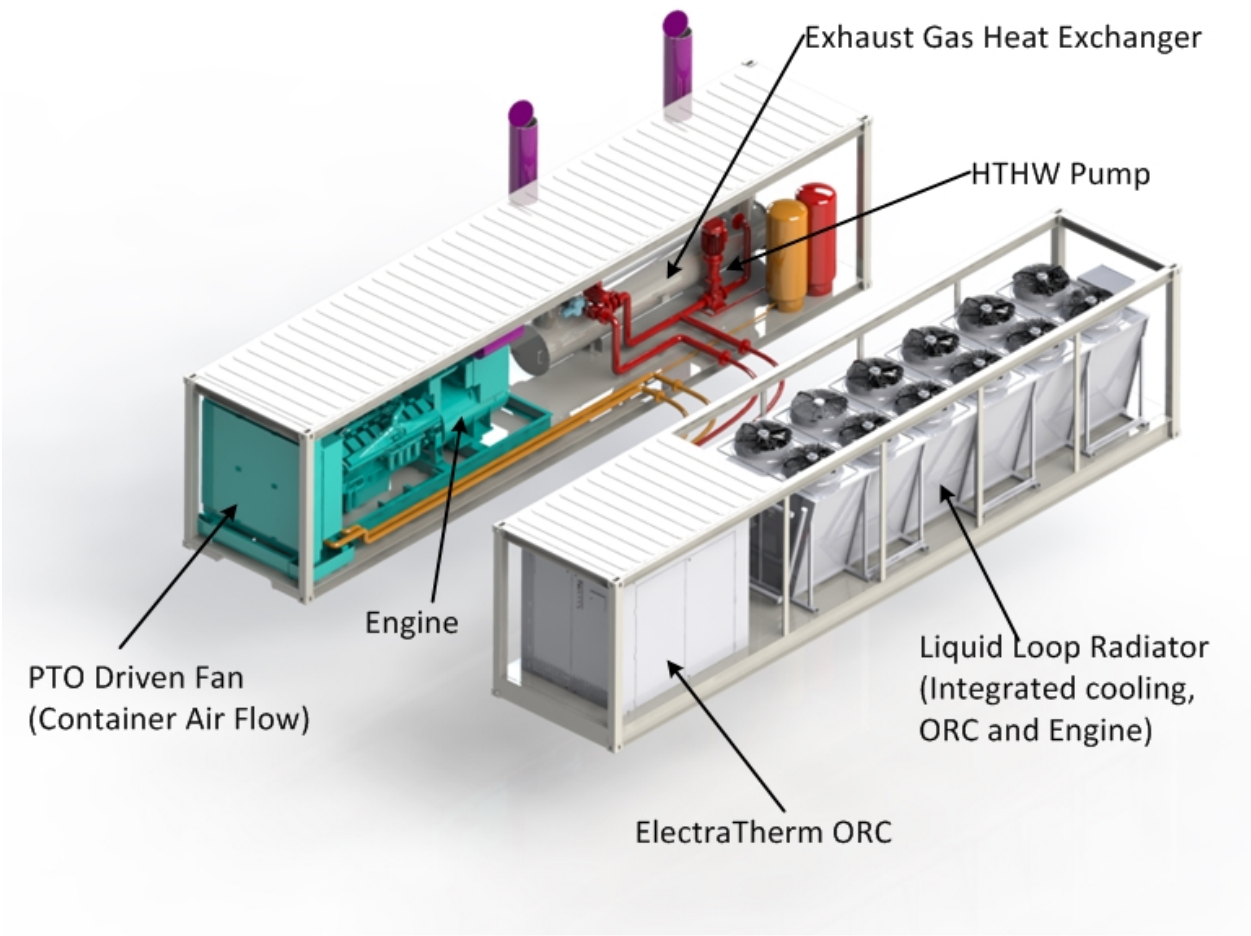

Major Component Layout

5.4 OPERATIONAL TESTING

Operational testing was conducted in several stages. The unit was first integrated and partially commissioned at ElectraTherm;s plant in Reno, NV. An intensive test was then conducted at the MUSE facility in Pt. Hueneme, CA once the packaged system had been fully integrated, commissioned, optimized and was ready for operation. The goal of the commissioning in Reno was to fine tune controls and operational set points to optimize performance prior to testing. The goal of the intensive test was to collect detailed performance data under controlled load conditions matching baseline conditions and also to verify load following and load paralleling behavior that could not be tested in Reno. Following the intensive test, the packaged unit was deployed and plans were to monitor operations remotely over up to a one year period (at least 2000 hours operation).

The integrated system was fully instrumented in order to collect all data required to evaluate the performance objectives. A list of specific instruments to be monitored is included in Appendix C. The instrument list provides expected nominal readings and operating ranges, accuracy specifications and the manufacturer/model selected for each SRI/ElectraTherm instrument. In addition to the SRI/ElectraTherm measurements, a number of parameters from the engine control module were logged. These data will document the genset power output and provide indications of genset 'health' or proper operation. Full details on how sensor data were to be used to evaluate performance objectives are provided in subsections for each performance objective under section 6.0 below.

All data from SRI/ElectraTherm and KTA50-G3 instruments were centrally logged on the ORC PLC.

5.4.1 Intensive Testing

In terms of the demonstration objectives, the primary goal of the intensive test was to quantify the increase in total integrated system efficiency over the baseline genset efficiency in terms of power output per unit fuel consumption (kWh/gallon). This included quantification of the expected efficiency increase due to the high efficiency radiator alone and quantification of the expected efficiency increase due to the radiator improvements and direct ORC cooling. A full discussion of the factors involved in this quantification is provided in section 3.2.2 above.

The intensive test effort required precise fuel consumption measurements and verification of consistent fuel quality between baseline and intensive tests. Apart from these measurements, all other data to be collected during the intensive tests is the same as were collected during the long term monitoring.

Prior to the intensive testing, ElectraTherm conducted commissioning test runs under controlled loads to fine tune controls and operational set points in order to optimize system performance per the commissioning plan.

5.4.1.1 Optimize Jacket Water Temperature

During the intensive test, a load sequence was conducted to determine the impact on total system efficiency of potentially increased intake air temperatures due to the proposed increase in jacket water (and after-cooler) temperature. For this test, the jacket water temperature was initially set at 210 F per the ORC design criterion and decreased in 15 degree increments to 180 F (normal operating temperature). Cummins performance engineering was consulted to determine the minimum temperature increment likely to have an effect, but declined to provide this information as it is considered proprietary.

At each temperature increment, the jacket water and intake air temperatures were allowed to stabilize followed by approximately 30 minutes of run time to measure fuel efficiency at each temperature condition. The load condition for this test was set at the nominal 900 kWe. While it is possible that the optimum jacket water temperature set point may be different at different load conditions, ElectraTherm did not feel it would be worthwhile to implement a jacket water temperature control strategy dependent on load.

The goal of this test sequence was to find the optimum jacket water temperature in terms of overall system efficiency. The difference in ORC power output between 210 F and 180 F jacket water temperature was estimated by Cummins to be on the order of 10 kWe. To offset this difference, the genset fuel consumption would have had to increase by about 0.6 gallons per hour due to the higher jacket water temperature. During intensive testing, however, there was no measured change in fuel consumption with jacket water temperature.

5.4.1.2 Determine Integrated System Performance and Efficiency Gain under Controlled Load Conditions

Test runs were then conducted over the expected range of deployed load conditions at the optimized jacket water temperature. The load set points were nominally 700, 900, and 1100 kWe, or 64 to 100% of full load in prime unlimited service, matching the baseline test conditions. After ORC output had stabilized, approximately 20-30 minutes of data collection (at a 1 minute data recording interval) at each condition provided sufficient data to evaluate fuel economy at each load with good statistical confidence. These data (as corrected for differences in ambient conditions between the baseline and test events) were compared to the baseline results to determine the total integrated system efficiency gain including the gains due to ORC power output, radiator improvements and the direct ORC cooling benefit as defined in section 6.2.

A final set of test runs was conducted over the range of load conditions with the ORC offline. These results indicate the efficiency gain due to the radiator improvements alone. With the ORC offline, the working fluid (refrigerant) flow through the expander is stopped and there is no ORC cooling benefit. The difference between the efficiency gain with the ORC online and offline is the efficiency gain due to ORC cooling alone. This difference is expected to be small (1-2 kW), and is not within the statistically quantifiable range. In addition, this sequence of tests was used to determine the radiator fan load for engine cooling only as the dry cooler load with the ORC offline.

In the integrated system, the differential pressure across the engine's jacket water pump could have been increased compared to baseline conditions, placing an increased load on the pump. This increase could be due to the changes to the radiator and piping compared to the baseline system and the addition of the pressure drop across the ORC preheater (nominally 1.9 psi). According to Cummins specifications, the total pressure drop across the jacket water circuit should not exceed 15 psi. Southern monitored the pressure drop across the jacket water pump to ensure that it remained within specification and is comparable to the pressure drop with the stock radiator. According to Cummins applications engineering, the typical dP across the stock radiator is 2-4 psi. According to ElectraTherm design specifications, the pressure drop across the jacket water circuit in the integrated system was expected to be less than 11 psi. During testing, the dP across the jacket water pump was 5.7 psi – well within the Cummins specification.

For the commissioning and intensive tests, it was also important to note that the exhaust gas heat exchanger was new and clean, whereas, in normal operation, the heat exchanger is designed to operate in a fouled condition due to inevitable accumulation of diesel soot. This circumstance might appear to suggest that the intensive test results may not be representative of real world operation. However, as explained in section 5.2, the design of the ORC's exhaust gas heat recovery circuit is constrained by the fouled case and the circuit captures the same amount of heat and delivers the same performance in both clean and fouled operation.

Table 6 summarizes the intensive test run plan. Details of the efficiency calculations and input data are provided in section 6.2 below.

Table 6. Intensive Test Run Matrix

Operating Scenario	Run Order	Jacket Water Temp (F)	Result	Load Conditions (kWe)
ORC Integrated	3	210-180 in 15 degree increments	Determine optimal jacket water temperature in terms of total integrated system efficiency	900
ORC Integrated	2	optimal setpoint	Total increase in integrated system efficiency due to ORC power output + radiator improvement + ORC cooling	700/900/1100
ORC bypassed	1	optimal setpoint	Increase in genset efficiency due to radiator improvement alone. Radiator fan load wit ORC offline and full heat load from the engine.	700/900/1100

5.4.2 Long-term Monitoring

Long term monitoring during deployment was to have included all of the measurements conducted during the intensive test except for the coriolis fuel consumption measurements. Based on experience with numerous studies, Southern feels that fuel economy measurements under varying site load conditions are of little value compared to those obtained during controlled load tests especially when, as in this case, relatively small increases in fuel economy are to be measured. The intensive test data were relied upon to quantify the total system efficiency gain under various load conditions. Long term monitoring was intended primarily to provide data to characterize availability/reliability/operability, but was also designed to capture the fuel efficiency gain due to ORC power generation as averaged over varying site conditions.

Fuel consumed during long term monitoring would have been quantified using mechanical supply and return fuel flow meters that were mounted between the day tank and engine. Data from the meters was logged on the ORC PLC. The mechanical meters are accurate to within ±2 % with repeatability to ±0.5%. The mechanical fuel meters were installed prior to intensive testing so that any meter bias could be accounted for by comparison with the coriolis meter results.

Although not as precise as controlled fuel economy testing; over the longer term, errors in fuel economy results using mechanical meters will tend to average out and yield robust results. These data would have been of interest in establishing comparative field performance results versus the controlled tests. However, it is important to note that the field fuel economy measurements were not essential to verifying the overall performance of the integrated system. ORC performance does not depend on the fuel used and the cooling load reduction determined during the controlled tests is applicable to the deployed testing, irrespective of fuel. The rationale for this conclusion is discussed further in section 6.1.1 below.

The primary goal of the long term monitoring was to monitor operations under real world conditions over a sufficient period that representative determinations of availability, reliability and operability could be made. The nominal long term monitoring period was to have been 2000 hours operation over a period of up to one year. This period was intended to capture system performance under typical variation in ambient conditions and over the range of site load conditions. A shorter monitoring period may have been deemed sufficient provided that expected variations in site conditions were captured and there was sufficient run time to adequately characterize availability/reliability. The monitoring period might also have been reduced if, for reasons outside of the control of Southern or ElectraTherm, the unit had to be

taken offline or redeployed. Of course, as mentioned above, the unit was never fully operational at GTMO due to issues discussed fully in section 8.0 below.

5.4.3 Operations Monitoring Schedule

Table 7 shows the expected operations monitoring schedule.

Table 7. Operations Monitoring Schedule

Event	Date
KTA50-G3 Acceptance Testing	2/6/2013
KTA50-G3 Baseline (fuel economy) Testing	5/14/2013
Integrated system preliminary design review	6/6/2013
Integrated system design complete and approved	11/4/2013
Integrated system single radiator re-design approved	June 2014
KTA50-G3 shipped to packager	June 2014
ORC container complete	September 2014
Engine/CHP container complete (significant delay from August 2014 and work was still incomplete)	March 2015
System integration in Reno (ORC/CHP containers) – delayed from Aug/Sep 2014 plan	May/June 2015
Intensive testing in Pt. Hueneme (delayed from Sep/Oct 2014 plan)	July 2015
Integrated system deployed. Initial commissioning efforts failed.	August 2015
Subsequent commissioning efforts at GTMO, equipment damaged	October 2015
Decision to terminate field demonstration	December 2015

5.5 SAMPLING PROTOCOL

A complete list of all of the continuous monitoring data collected is provided in Appendix C. This list includes instruments that are integral to the ORC and KTA50 systems and instruments that have been added specifically for the purpose of the demonstration. The purpose of each measurement is described in the Appendix. The P&ID included in Appendix B schematically shows the location of each ElectraTherm/SRI instrument within the process.

The data were logged centrally on the ORC PLC. The data were accessed remotely via FTP file transfer over a secure internet connection provided by the local GTMO public internet service provider.

During the intensive tests, the data compilation interval was 1 minute. During long term monitoring, the data compilation interval was set to 6 minutes. This interval is based on the steady state operating

characteristics of the ORC and the KTA50 and was chosen to capture significant changes in performance while avoiding collection of an excessive volume of data which might impede data transfer and analysis. The ORC PLC logged data at a 10 second sample rate. The logged data were averaged into 6 minute data compilation intervals for analysis and reporting. The 10-second data were available as needed for system troubleshooting and diagnostics.

The only actual sampling that was conducted as part of the demonstration was for the fuel samples used to verify the consistency of the fuel supply between the baseline and intensive tests and oil and coolant samples that were used to verify that the elevated jacket water temperature does not cause oil oxidation or excessive engine wear.

Fluid samples were collected during the baseline and intensive tests and again during commissioning at GTMO. For the deployed testing, fuel, oil and coolant samples were obtained at the start of operation and were to have been after each interval of approximately 500 hours operation, for a total of five sets of samples over 2000 hours operation.

The fuel, oil and coolant analyses were completed by Titan laboratories in Denver, CO which is an ISO/IEC 17025:2005 certified test lab (certificate number L12-210). Sampling and shipping containers were provided by Titan labs and were filled to the specified level by pumping from the day tank using a clean disposable sampling pump to avoid contamination. Oil and coolant sample containers were filled from drained fluids or through use of the sample pump.

Qualitative information on system reliability and operability were to have been gained from formal and informal interviews with project participants and operating staff conducted throughout the duration of the deployed test. Participants were to have been asked to complete a brief survey; however, in Southern's experience, the most valuable information is gained from less formal, day to day interactions. Southern was to have documented these interactions in a daily project log. Information on the content of this log is provided in section 6.4 below. These data were to have been compiled into a narrative description in the final report, citing specific examples from the log as required.

6.0 PERFORMANCE ASSESSMENT

This section provides details of the measurements and calculations used to arrive at reported performance results.

6.1 Increase Energy Output

The total increase in energy output for the integrated ORC/genset system is comprised of the direct electric power output of the ORC and the equivalent power output due to the reduction of the cooling load on the engine. As discussed above (section 3.2.1), the reduction in cooling load is due to improvements to the engine radiator and the additional, though small in this instance, direct cooling provided by the ORC.

The electric power output of the ORC was measured using a revenue grade power meter. The reduction in cooling load was determined from the difference in baseline and intensive test fuel economy measurements offset by the power consumption for engine cooling of the VFD controlled radiator fan that replaced the PTO driven radiator fan in the baseline engine.

The increase in power output is determined as a function of engine load across the typical load range of the KTA50 genset (700-1100 kW). Equation 1 describes the total gain in power output due to ORC integration. Equation 2 describes the effective power gain due to the reduction in cooling load.

Equation 1. Total Effective Increase in Power Output

$$Total\ Effective\ Power\ Increase(L) = ORC_{net_electric(L)} + ORC_{cooling(L)}$$

Equation 2. Power Increase due to Cooling Load Reduction

$$ORC_{cooling(L)} = \left[\left(FE_{test\ (L)} - FE_{baseline(L)}\right) * FC_{baseline(L)} - RF_{(L)}\right]$$

Where,
$ORC_{net_electric(L)}$ is the ORC electric power output (kW), net of parasitic loads at a given load condition
$ORC_{cooling(L)}$ is the effective power gain due to the reduction in cooling load (kW) at a given load condition
$FE_{baseline(L)}$ is fuel economy (kWh/gallon) at a given load condition as determined during the baseline tests
$FE_{test(L)}$ is fuel economy (kWh/gallon) at a given load condition as determined during the intensive tests and corrected to baseline ambient conditions
$FC_{baseline(L)}$ is fuel consumption (gallon/hour) at a given load condition as determined from baseline test data
RF is the VFD controlled radiator fan average power consumption for engine cooling only (kW)
L is the load condition (kW)

Parasitic loads include power necessary to operate:

- pumps for the exhaust gas heat exchanger and dry cooler loops,
- the ORC refrigerant pump, air compressor (for pneumatic valve control), and controls (metered together)
- dry cooler fans

Nominal power requirements for each parasitic load are given in Appendix C.

6.1.1 Considerations for Deployed Testing

The calculations described above for determining the power increase due to the reduction in cooling load are strictly applicable only for the baseline/intensive test data. During deployment, the fuel in use may not match baseline test conditions - F76 marine diesel was used at GTMO versus #2 diesel for the baseline/intensive tests. In addition, the load during deployment will not necessarily be controlled (it may vary according to installation demand and generator bank operating strategy). That said, GTMO planned to operate the unit at a steady 900 kWe load.

Recall that the effective power increase due to the reduction in cooling load is gained largely by replacing the stock radiator with a high efficiency radiator and, to a much smaller extent, by the effect of the ORC taking up part of the jacket water cooling load. These increases are independent of fuel type except inasmuch as fuels with higher or lower energy density (or fuel economy) than the baseline/intensive test fuel may place a somewhat different heat load on the engine at a given power output. This difference could have a small impact on both direct ORC cooling and on effective power gain due to the radiator improvements. However, such a difference will cancel arithmetically in the computation of the reported result (see equation 2 above) since the power gain is determined from the *difference* between baseline and intensive test results using the same fuel. In other words, regardless of which fuel is used in the controlled tests, the reduction in cooling load determined from controlled testing is applicable to deployed operations using any suitable fuel.

Further, the energy density (and expected fuel economy) of diesel fuel (Btu/gallon) is closely related to the API gravity and the API gravity specification for #2 diesel (34-40) is very similar to the specified API gravity for F76 (33-39). In other respects (e.g., cetane index, lubricity, viscosity), the two fuels are also very similar. Marine diesel (F76) is essentially an enhanced version of #2 diesel designed to prevent diesel engine problems typically found at sea. Thus, any difference in fuel economy between #2 diesel and F76 fuels is expected to be small.

Table 8. Fuel Analysis Results and Comparisons

location/test	baseline		intensive	baseline vs. intensive	GTMO	avg. baseline: intensive vs. GTMO
sample ID	**Sample 1**	**Sample 2**	**Sample 1**	**%diff**	**sample 1**	**%diff**
Control #	516	523	723	na	na	na
Date Taken	5/14/2013	5/14/2013	7/17/2015	na	8/21/2015	na
Cetane	52.4	52.7	51.4	2.2%	51.1	2.0%
Sulfur (ppm)	9	8	10	na	3100	na
API Gravity	37.9	38	37.7	0.7%	36.3	4.1%
Bacteria/Fungi	Negative	Negative	Negative	na	Negative	na
Water %	<0.05	<0.05	<0.05	na	<0.05	na
Btu (from API gravity)	na	137,000	137800	-0.6%	137420	-0.01%

Southern's conclusion is that any fuel-dependent residual error would be very small – at or below measurement error - and that the power gain due to the reduction in cooling load as determined from the baseline/intensive tests are applicable to the longer term testing.

During the intensive testing, the equivalent power gain due to the reduction in cooling load was quantified over a range of load conditions (700 kW, 900 kW and 1100 kW) spanning the possible load during deployment, resulting in a curve describing the effective power gain at any generator load in this range. For the deployed testing, this curve would have been used to predict the power gain due to the reduction in cooling load at any genset load along this curve. The power (kW) increase in each data recording interval would be integrated over the monitoring period to arrive at total kWh increase in energy production attributable to ORC integration over a given period of time.

As a check, the fuel consumption versus load curves could be adjusted to reflect any difference in fuel economy between #2 diesel and F76. Data to support this adjustment would have been provided by average fuel economy measurements (kWh/gallon) obtained using mechanical fuel flow meters in the field as compared to intensive test data – and the mechanical meters were cross-calibrated to the coriolis mass flow meters during the intensive test.

6.1.2 Correction for Ambient Conditions

As discussed in section 3.2.2, it may have been necessary to correct intensive test fuel economy results to baseline ambient conditions to establish comparability. In such an instance, Southern proposed to use the formula from an SAE paper on predicting diesel engine performance at various ambient conditions [4] as given in Equation 3.

Equation 3. SAE Formula for Predicting Diesel Engine Performance for Changes in Ambient Conditions

$$\frac{kW_s}{kW_t} = \left[\frac{P_s}{P_t}\right]^A * \left[\frac{T_t}{T_s}\right]^B$$

Where,
s is the specified condition
t is the test condition
P is ambient pressure
T is ambient temperature

A = 0.19 for turbo-intercooled engines
B = 0.52 for turbo-intercooled engines

Equation 3 is validated in the paper for near full load conditions. Validated formulas are also given in the SAE paper for corrections at part load conditions; however these formulas require detailed data on turbocharger and after-cooler performance which are impractical to determine in a field demonstration. Cummins performance engineering was unable to provide the necessary information as these data are considered proprietary. Southern unsuccessfully sought alternate means of obtaining representative values for the necessary parameters to correct for ambient condition specific engine performance changes at part load conditions, thus the SAE formulas would have been used had a correction been necessary. Fortunately ambient conditions during the baseline and intensive tests were nearly identical (see section 3.2.1.3), so no such correction was warranted.

6.2 Increase Integrated Power System Efficiency

As discussed above (section 3.2.2), the integrated power system efficiency gain is most appropriately evaluated under the normal operating scenario where the power system load follows the installation demand. In this scenario, the efficiency gain would be the decrease in KTA50 fuel consumption between the installation demand load and the reduced KTA50 load due to ORC integration as a fraction of the fuel consumption at the installation demand load as shown in Equation 4. To account for the effective power gain due to the reduction in cooling load, the fuel consumption at the installation demand load must be taken at baseline conditions and the fuel consumption at the actual load must be taken at integrated system conditions.

Equation 4. Integrated Power System Efficiency Gain

$$Efficiency\ Gain(DL) = \frac{FC_{baseline(DL)} - FC_{test^*(AL)}}{FC_{baseline(DL)}}$$

Where,
FC is fuel consumption (gallons per hour)
DL is the installation demand load on the integrated genset/ORC system
AL is the actual KTA50 load at the installation demand load
baseline refers to KTA50 baseline fuel economy test conditions
*test** refers to integrated system fuel economy test conditions

This computation requires prediction of fuel consumption over baseline and integrated system load conditions. The data to support this computation were obtained from fuel consumption versus load curves developed from the baseline and intensive test data collected under controlled load conditions. The fuel consumption versus load curves were highly linear with a correlation coefficients (r^2) all greater than 0.999. As such, these predictions may be considered very accurate.

6.3 Determine ORC Efficiency

The efficiency of the ElectraTherm ORC engine is the ratio of the electric output (kW) to heat input (expressed in kW). The total heat input is the sum of the heat input to the preheater and the heat input to the evaporator. Heat input in a thermal loop is calculated as the product of the temperature difference across the heat exchanger, and the flow, density and heat capacity of the heat transfer fluid as shown in Equation 5.

Equation 5. Thermal Loop Heat Input (kW)

$$Q = F * \Delta T * \rho * C_p * 60 * 3412.14$$

Where,

Q is the heat input (kW)
F is the flow rate (gallons per minute)
ΔT is the temperature difference across the heat exchanger (°F)
ρ is the density of the heat transfer fluid (lb/gallon)
C_p is the heat capacity of the heat transfer fluid (BTU/lb/°F)
3412.14 is the conversion factor from Btu to kWh

The density of the heat transfer fluid will vary with temperature as will the heat capacity to a lesser extent. These variations are accurately characterized for water and water/propylene glycol mixtures. The density and heat capacity values are adjusted using the average temperature of the heat transfer fluid across the heat exchanger. Typical values at predicted ORC operating temperatures for each external heat transfer loop are given in Table 8.

Table 9. Heat Transfer Fluid Properties

Heat Transfer Loop	Reference Temperature (F)	Density (lb/gallon)	Heat Capacity (Btu/lb/F)
Preheater (50/50 water/glycol)	195.45	8.26	0.9089
Evaporator (water only)	269.5	7.79	1.019
Condenser (50/50 water/glycol)	103.8	8.61	0.8619
Note: Reference Temperatures are for ORC operation at 77F ambient and 85% engine load (approximately 900 kW)			

6.4 Verify Availability, Reliability and Operability

In order to be successful, the integrated ORC/genset system must provide sufficient availability, reliability and operability (ease of use) so that the economic value is realized and no undue burden is placed on operations staff. The ElectraTherm ORC is designed to operate on a 24x7 basis with a minimal level of attention and to have no impact on the operation of the primary diesel genset. Projected economics are based on periodic minor scheduled maintenance and infrequent unscheduled down time as documented in ElectraTherm's operating manual [5]. In the integrated system, the ORC may be taken off line without affecting the operation of the genset and ORC output will follow generator load without the need for additional controls or any change to the usual operation of the genset.

Availability is a quantitative metric that is given as the percentage of time that the system is either operating or capable of operation if down for unrelated reasons. Reliability is both a quantitative and qualitative metric that assesses the robustness of the system in terms of likelihood of failure or operational problems, the consequences of such problems, and the ability to recover. Availability and reliability would have been assessed quantitatively in accordance with ANSI Standard 762 which uses a specific categorization of operating and downtime hours. Reliability may also be assessed qualitatively based on the operating experience of project participants including Southern Research, ElectraTherm, MUSE and deployment site operators and officers.

To assess quantitative reliability, the following service parameters would have been logged by Southern during deployed testing in accordance with ANSI 762.

- Period Hours (PH) = total hours for a specified period.
- Service Hours (SH) = Hours the unit is in actual operation or fully available for operation;
- Reserve Shutdown Hours (RSH) = Hours unit is shut down by choice, but could otherwise be available for operation;

- Planned Outage Hours (POH) = Hours for a shutdown defined in advance (i.e. site maintenance activities, inspection of components, planned system upgrades, etc.)
- Forced Outage Hours (FOH) = Hours for a shutdown period due to circumstances beyond the control of the plant;
- Maintenance Outage Hours (MOH) = Hours for unplanned maintenance shutdowns;

Reliability and Availability are calculated as follows:

- Reliability = 1 - (Forced Outage Rate) = [Period Hours (PH) – Forced Outage Hours (FOH)]/[Period Hours (PH)]
- Availability = [Service Hours (SH) + Reserve Shutdown Hours (RSH)]/[Period Hours (PH)]

For any period when the system was not operating, Southern would have completed a downtime log entry and categorized hours in accordance with the above definitions. All downtime periods would be clearly indicated in the logged data. The cause of the downtime would have been, in most cases, apparent from the logged data. If this were not the case, Southern would have followed up with GTMO operations staff to determine the cause of the downtime. The cause would be noted in the log along with any corrective actions undertaken. The log would have been updated on a weekly basis throughout the long term monitoring.

In addition, an operational log for the system would have been updated by Southern on a weekly basis and contain entries for each event or occasion when the system is inspected, adjusted, maintained, repaired or requires attention in any way. Each entry would have contained:

- Date/Time
- Names of the observer and participants in the event
- What alerted staff to the event – e.g., routine inspection, system alarm, notification
- Description of the event
- Cause of the event
- Actions taken including all steps leading to resolution
- Staff time and material resources required to resolve the event
- Comments on how easily the situation was resolved and any problems encountered.

Qualitative reliability and operability was to have been assessed and documented in the final report with reference to operations logs, weekly status updates, monthly status summaries, participant communications, meeting minutes, and formal and informal interviews with project participants during deployed testing.

6.5 Evaluate System Economics

The economic analysis conducted for this demonstration implements a life cycle cost analysis (LCCA) approach. The LCCA conforms to the requirements and conventions specified in the Life Cycle Costing Manual for the Federal Energy Management Program (FEMP) - also known as ‘Handbook 135’. The latest version of the NIST Building Life Cycle Cost (BLCC) software was used to model inputs and calculate the LCCA results for various scenarios. A full description of the cost model, cost drivers and a presentation of the cost analysis results and comparisons for various meaningful scenarios is provided below in section 7.0

6.6 Determine GHG Emissions Reductions

For this demonstration, the GHG reductions associated with ORC integration are attributable to the diesel fuel usage offset by the electricity produced by the ORC using waste heat and the reduction in cooling load on the engine. The means to quantify these fuel savings (gallons/year) is presented above in section 6.1. GHG emissions factors (kg/gallon) and 100 year global warming potentials from the current (2014)

edition of EPA Emission Factors for Greenhouse Gas Inventories [6] were applied to arrive at GHG reductions in terms of metric tons per year CO_2 equivalent (CO_2e).

In order to establish GHG reduction success criterion for the demonstration, preliminary GHG reduction calculations were made for nominal ambient and load conditions (85% load (935 kWe) and 60F ambient temperature) resulting in an estimated savings of 233 metric tons CO_2e per year. Actual GHG savings based on baseline/intensive test results were calculated as 464 metric tons CO_2e/yr. The increase between the estimated and actual figures is due to overly conservative treatment of the reduction in cooling load for the estimates.

Table 9 documents figures and assumptions used in the estimate of GHG emissions reductions.

Table 10. Basis of GHG Emissions Reduction Calculation

Item	Qty	Units	Source/Notes
Installation demand	900	kW	GTMO deployment site nominal demand
Operating hours per year	8322	hours	based on 95% availability
Fuel economy curve slope (m)	0.0624	factor	baseline fuel economy tests 20130514
Fuel economy curve intercept (b)	10.8151	gph	baseline fuel economy tests 20130514
Fuel economy curve correlation coefficient (r2)	0.9997	factor	baseline fuel economy tests 20130514
ORC direct power output	38.70	kW	measured value - 20150717 intensive test
Cooling load reduction	45.00	kW	'conservative' value - see report section 3.2.1
Total increase in equivalent power output due to ORC integration	83.70	kW	sum
Genset power output	861.3	kW	nominal (installation demand) less ORC electric output
Effective genset output for integrated system fuel consumption	816.3	kW	nominal (installation demand) less ORC electric output, less reduction in cooling load
Baseline fuel consumption at installation demand	66.9	gph	900 kW installation demand
Fuel consumption at genset output (installation demand less ORC output)	64.5	gph	calc, baseline conditions
Fuel consumption including reduction in cooling load	61.5	gph	calc, integrated system conservative test results
Baseline annual fuel consumption at 900 kW load	557,132	gallons	at 95% availability
Intgrated system annual fuel consumption at 900 kW load	511,860	gallons	at 95% availability
Annual fuel savings	45,272	gallons	difference
CO2e emissions associated with diesel fuel savings	464	metric ton/yr	Uses 100 year GWPs from EPA emision factors for greenhouse gas inventories 4 April, 2014, GWP CH4 = 25, N2O = 298

6.7 Data Quality

To be of value, the data collected in the demonstration must be of sufficient documented quality so that the results derived from that data will meet the decision making needs of project stakeholders, DoD installations and other parties with an interest in the technology. Specific requirements for data quality, and the objectives that follow from these requirements, depend on the type of result reported as well as the end use of those results by decision makers.

6.7.1 Data Quality Assessment for Key Performance Objectives

The following sections discuss data quality for key demonstration objectives and describe the means by which Southern measured, documented and assessed data quality to provide assurance that the results are of documented quality sufficient to meet stakeholder needs.

Uncertainty calculations presented below are estimates based on manufacturer sensor accuracy specifications and predicted system performance and using standard formulas for error propagation. In these estimates, the covariance terms in the error propagation formulas have been neglected, although in most cases the values are in fact correlated. That said, an estimate of the contribution of the co-variance term was made and the contribution was negligible. Unless otherwise stated, sensor manufacturer accuracy figures and reported uncertainties are taken as 1-sigma values, consistent with industry practice.

6.7.1.1 Increase Energy Output

The total effective increase in energy output from the integrated ORC/genset system is the sum of the direct power output from the ORC generator and the effective power gain due to the reduction in cooling load as integrated over time. The uncertainty in the direct power measurements is small.

The uncertainty in effective power gain due to the reduction in cooling load (as given in section 6.1) is more significant as this result depends on comparison of baseline and test fuel economy determinations that involve:

- measurement of supply and return fuel flows,
- measurement of the power consumption of the VFD controlled radiator fan
- correction for changes in ambient conditions between baseline and test conditions
- differences between baseline and test conditions that may arise due to changes in engine performance or fuel composition

The following sub-sections discuss how uncertainties were characterized quantitatively.

Uncertainty in the Effective Power Gain Due to the Reduction in Cooling Load

Every effort was made to minimize each of the uncertainties involved in determination of the effective power gain. Fuel flows were measured with Krohne Optimass 7000 T10 coriolis mass flow meters with a stated accuracy of ±0.1% of reading. Calibration certificates for these meters show accuracies of ±0.035%. For the baseline test data, the uncertainty in the net fuel consumption (difference between supply and return flow) was ±0.12% (95% confidence interval) at all load conditions. The proposed correction for changes in ambient conditions was deemed unnecessary and does not contribute. By all measures, the performance of the KTA50 engine remained stable. Stable fuel composition between baseline and test events was verified by fuel analysis.

Error propagation for the measured values used to determine the effective power gain due to the reduction in cooling load computes to a ±4.25 kW uncertainty at intensive test conditions. Give a 45 kW net gain, the relative uncertainty would be ±9.5%.

Uncertainty in Direct Power Measurements

The power output of the ORC and the power consumption of the parasitic loads and VFD controlled radiator fan was accurately and precisely determined using Veris E51C2 power meters. These meters meet the ANSI C12.20 0.2 standard for a revenue grade meter with ±0.1% accuracy ratings for voltage and current output. The uncertainty in the current transformer output is the largest contributor to the overall uncertainty. A somewhat conservative estimate of the uncertainty in the current transformer output of ±1% is used. The propagated voltage, current and current transformer uncertainty for this measurement is ±1.01%. To determine the net power output, the sum of the parasitic loads (see section 6.1) is subtracted from the ORC output. The combined uncertainty for the net ORC power output amounts to ±1.30%.

This value is the uncertainty in a single, instantaneous, net power output measurement. Averaging of instantaneous power measurements over time will result in much smaller uncertainties in the mean values. For example, in the baseline/intensive tests, power measurements were captured every 1 minute. In a 20 minute run, the standard error (expected difference of the mean from the true value) amounts to 0.23%, corresponding to an absolute error of ±0.11 kW for a nominal 50 kW net ORC output.

Southern considers that the uncertainties in the direct and effective power gain determinations presented above represent best available data under field conditions (outside of controlled laboratory conditions using specialized equipment) that satisfy any reasonable data quality objective.

6.7.1.2 Increase Integrated Power System Efficiency

The uncertainty in the integrated power system efficiency gain is, as above, related to the uncertainties in the fuel consumption measurements and in the comparisons between baseline and test fuel economy results. The propagated error in the efficiency gain determination based on the formula given in Equation 4 comes to ±0.65% assuming an overall efficiency gain (increase in fuel economy expressed as kWh/gallon) of 9.3% which corresponds to a total net power gain (ORC output plus reduction of cooling load) of 83.7 kW at 900 kW total installation demand.

6.7.1.3 Determine ORC Efficiency

The uncertainty in the ORC efficiency determination depends on the uncertainties in the heat inputs to the system and the uncertainty in the ORC power output measurements. The uncertainty in the ORC power measurements has been discussed above (section 6.7.1.1). The heat input is determined from temperature differential and heat transfer fluid flow measurements. Temperatures were measured using class A RTDs, which are the most stable and accurate temperature sensors available. This uncertainty is not reported as insufficient data were collected to allow determination of ORC efficiency. The following is presented for reference on how this would have been done had circumstances been as planned.

According to the DIN IEC 751 specification, the absolute accuracy for class A RTDs is a function of temperature as given by Equation 6.

Equation 6. RTD Accuracy

$$\boldsymbol{RTD\ Accuracy}\ (^{\circ}\boldsymbol{C}) = \pm\mathbf{0.15} + \mathbf{0.002} * \boldsymbol{t}$$

Where,
T is the measured temperature in degrees centigrade

Alia AMF900 series electromagnetic flow meters were used to measure the flow in each heat transfer loop. The accuracy of these meters is stated at ±0.4% of reading for flow velocities greater than 1.6 feet per second. Southern has verified that the minimum flow velocity in any of the three loops is 1.9 feet per second.

Southern determined the propagated uncertainty for the heat flow in each loop based on the temperature and flow uncertainties presented above for expected temperatures and flows at nominal operating

conditions of 85% load (935 kWe) and 60 °F ambient temperature. This calculation also accounts for uncertainties in the heat transfer fluid density and heat capacity per accuracy values provided in ASTM D1298 for density of water/glycol mixtures and ASHRAE tables for the heat capacity of water and water/glycol mixtures. The combined uncertainty for the heat input to the ORC is ±6.2 kW or ± 0.5% of the expected heat flow at the modeled conditions. This uncertainty is for a single, independent determination. For an average of 90 such determinations at steady state conditions (e.g., for the intensive tests), the expected uncertainty (standard error of the mean) is ±0.66 kW.

The propagated uncertainty for ORC efficiency, combining the uncertainties in the ORC power output and heat input determinations over an average of 90 steady state readings, is ±0.1% of the ORC efficiency. If the ORC efficiency is 7%, the uncertainty would be ± 0.008%.

6.7.2 Ancillary Data Quality

Ancillary data are those data that were collected but do not directly support determination of demonstration objectives. As these data are not critical measurements and do not directly affect achievement of data quality objectives, the most stringent QA/QC requirements are unnecessary. However, these data do contribute to the understanding of performance during the demonstration so, should any problems with these measurements occur, Southern correct the deficiency in a timely manner. The quality of all ancillary data was verified using reasonableness and consistency checks. Calibration certificates were obtained as available.

In this demonstration ancillary data serve to:

- establish data representativeness or comparability (e.g., ambient conditions)
- document system 'health' and operational parameters (e.g., KTA50 operating parameters)
- provide information to aid with assessing applicability for other sites or circumstances and increase the technology transfer value of the demonstration (e.g., ORC heat input)

A number of KTA50 operational parameters were captured from the KTA50's control system to verify system 'health' and operational status. A complete list of these is given in Appendix C.

The only data parameter that was collected from the KTA50 that has quantitative importance for the determination of demonstration objectives is the power output. The Cummins supplied power meters are known to be robust and reliable; however the accuracy specification is only ±5% for power and ±1% for voltage and current (yielding a propagated uncertainty for power output of ± 1.4%). As these accuracy specifications are lower than those for the Veris power meters that were used to measure ORC output, Southern verified power output readings from the KTA50 during the intensive tests using a portable Megger PA9 power meter with ±0.4% voltage accuracy and ±0.25% current accuracy for combined power accuracy of ±1.11%, which is comparable to the power accuracy of the Veris meters (±1.01%). Due to circumstances in the field, these checks were limited to two of the intensive test scenarios at the 900 kWe load condition. The largest difference noted was 1.07% and no correction was deemed necessary.

Fuel, oil and coolant analyses were completed by Titan laboratories in Denver, CO which is an ISO/IEC 17025:2005 certified fuel specification test lab (certificate number L12-210). Sampling containers were provided by Titan labs and were filled to the specified level using a clean catch of fuel during filling, or by pumping from the fuel, oil and coolant reservoirs using a previously unused, disposable sampling pump to avoid contamination.

6.7.3 Instrument Calibrations and Quality Checks

All monitoring instruments installed by SRI or ElectraTherm were newly purchased with a manufacturer's calibration valid for at least the duration of the demonstration period. Southern considers

that data collected from these instruments is sufficient to satisfy demonstration performance objectives and meet QC requirements.

All sensors were installed and initial sensor function checks conducted according to manufacturer specifications. Following sensor installation, source to data checks were conducted to verify that the data acquisition properly receives and processes incoming signals. During operation, sensor data was checked for reasonableness and consistency on a daily basis. During data review, temperature sensor pairs were verified against each other under isothermal conditions and corrections made to match the paired temperature readings.

6.7.4 Data Quality Review and Validation

All data were reviewed on a regular ongoing basis by Southern Research project staff and classified as valid, invalid or suspect. Data review consisted of (for example):

- verifying that data collection is complete for all sensors
- examining raw data values and trends for consistency and reasonableness,
- making comparisons between related measured parameters and calculated values for agreement with process operating parameters
- flagging incomplete, invalid or suspect data and documenting the reason for the flag
- initiating investigative or corrective actions as needed.

In general, valid data result from measurements that meet the required QA/QC checks, are collected during a period when an instrument has been verified as being properly calibrated and functioning, and are consistent with system operating parameters and reasonable expectations.

Reported results incorporate all valid data. Southern did not use suspect data. The impact on data quality of any problems or issues that arise was fully assessed and documented and reported. There were no limitations identified for the use of any data collected.

Near 100 percent data capture was achieved for all monitored parameters; however, a percentage data capture objective, by itself, is not especially relevant. It is generally more important to capture changes in performance and be able to identify the conditions causing those changes. Should a meter have failed, corrective action would have been initiated immediately.

The quality of all raw data from continuous monitoring instrumentation was assured by observing instrument calibration, installation and data review requirements as described in this section. In the event that problems were encountered, corrective action would have been initiated immediately. All problems and corrective actions were fully documented and the impact of all problems on data quality was assessed and reported.

6.7.4.1 Independent Review

Southern generally provides for internal and external independent review for all planning, data collection and analysis activities conducted as part of demonstration/verification projects. This review is conducted by experienced staff members that are not directly connected or involved with the project activities or by external reviewers as deemed necessary or appropriate by the project manager, principal investigator, or director.

The demonstration plan for this project was reviewed by Southern’s project manager and data quality auditor to ensure that it fully satisfies project objectives and complies with ESTCP guidance and Southern’s QA requirements. In addition, the plan was reviewed by ElectraTherm, MUSE and ESTCP.

The baseline/intensive test data, analysis and results were verified by an independent verifier in accordance with the ISO ETV 14034 draft international standard. Southern’s director is a member of the

international working group for ISO 14034. The baseline intensive test data from this project were offered as an implementation test for the new standard. The >50kW increased power output performance claim was successfully verified by the independent verifier. The project also passed to an ISO 9001 audit conducted by Southern's Quality system Manager.

6.7.5 Data Management

Field data were collected, stored, and retrieved from ElectraTherm's PLC at the demonstration site. Southern retrieved and reviewed data on a daily basis during the limited deployed testing. The data were accessed remotely using FTP transfer via a commercial internet connection at GTMO.

Southern's field team leader was responsible for ensuring that all electronic and hard copy data, forms and logs were accounted for, properly completed and stored in project files. The project manager periodically reviewed project files and verified that all data, reference sources, critical project documents and correspondence necessary to support data analysis and reporting are accounted for.

Raw data were compiled into spreadsheets for analysis with links or references to the original data source and storage location. All analyses and calculations reference conversion factors and constants from known sources identified within the analytical spreadsheets.

7.0 COST ASSESSMENT

The purpose of this section is to identify the information that was used and the methods that were employed to establish realistic life cycle costs for implementing the packaged ORC technology. The determination of the diesel fuel savings that determine the 'revenue' attributable to ORC integration is described and economic results are given for a range of economic conditions based on baseline/intensive test results at nominal prime power service conditions.

7.1 COST MODEL

The economic analysis presented here was informed by the demonstration, but the presentation here is somewhat generalized so that the results are applicable over a range of representative site conditions. All assumptions and information sources are documented to lend credibility to the results and to aid in adaptation of the analysis to the user's unique situation.

The life cycle assessment approach conforms to the requirements and conventions specified in the Life Cycle Costing Manual for the Federal Energy Management Program (FEMP) - also known as 'Handbook 135'. The discount rate used for this analysis was obtained from the annual supplement to Handbook 135 current to the year of the demonstration (2015). The latest version of the NIST Building Life Cycle Cost (BLCC) software was used to model inputs and calculate the LCCA results for various scenarios.

The life cycle economic analysis presented here is based on capital and operation/maintenance costs and revenues associated with diesel fuel savings projected over the expected lifetime of the equipment. Costs specifically associated with the demonstration program (e.g., additional instrumentation) or with product development are excluded as non-typical of a normal installation. The analysis is 'simplified' in the sense that it does not account for costs associated with financing (other than cost of money or discount rate) or taxes, or for 'revenues' or cost offsets associated with renewable energy credits, tax credits or other incentives that may be available in some locales.

The life cycle economic performance of the ORC system is assessed based on standard economic indicators of financial performance including the net present value (NPV), adjusted internal rate of return (AIRR), savings to investment ration (SIR) and simple and discounted payback periods.

The LCCA was completed in constant dollars (excluding inflation) per recommendations for non-financed projects in the BLCC model documentation and Handbook 135. All discount rates and price escalation rates are modeled in real terms (without inflation).

Initial investment costs are modeled as 'overnight' costs as of the service date. This practice is consistent with DoE practice for determining levelized costs for renewable energy technologies.

Table 10 provides an inventory of cost elements associated with the life cycle analysis along with a description of the data tracked and identification of the source of this information. Note that data tracked and data sources differ somewhat from the demonstration plan due to the early termination of the field test.

Table 11. LCCA Cost Elements

Cost Element	Description	Data Tracked	Data Source
Investment (Capital) Costs			
Hardware capital costs	Direct costs for equipment and supplies associated with the system	Actual equipment and supply costs for the demonstration installation	ElectraTherm project accounting and invoices (modified to remove costs required for the demonstration program only)
Design and Engineering Costs	Costs associated with site specific equipment specification, site preparation, and permitting. Does not include site selection costs. Does not include development costs.	Actual demonstration project costs, historical data from other ElectraTherm installations and/or estimates as a percentage of capital costs.	ElectraTherm project accounting, historical data and estimates.
Supervision, Inspection, & Overhead Costs	Costs associated with supervision of the project (project management), inspections for permit/code compliance, permit fees, and overhead charges by supplier.	Actual costs, historical data from ElectraTherm and MUSE from similar installations and/or estimates as a percentage of capital costs.	Project accounting, historical data and estimates from ElectraTherm and MUSE.
Site Preparation Costs	Costs for grading, pads, fencing and utility interconnection.	Actual costs and typical values.	ElectraTherm, MUSE and MUSE customer records.

Cost Element	Description	Data Tracked	Data Source
Salvage Value	Residual value of any equipment at the end of service life – may include scrap or resale, or may include offset of future costs if life of a specific component is beyond the overall system service life.	None. Salvage value at end of 20 year lifetime assumed equal to disposal cost.	Per FEMP 135 LCCA Manual.
Installation costs	Costs associated with the installation of the system, construction, commissioning, and startup costs.	Labor & materials required to install (actual and projected for 'typical' installation)	ElectraTherm, MUSE and deployment site accounting.
Operation and Maintenance Costs			
Routine system monitoring and supervision.	Periodic review of system operating parameters, response to alarms, adjustments to operating parameters as needed. Routine project management.	Labor hours, labor rate class.	Deployment site records, ElectraTherm and MUSE historical data and estimates. Does not include demonstration specific costs.
Consumables	Regularly used products (non-utility) that are consumed during normal use and must be replaced.	Oil, grease, filters, refrigerant, and other consumables for ORC operation. Additional consumables for engine if ORC integration increases required fluid change frequency.	ElectraTherm and deployment site records.
Maintenance	Includes both scheduled and unscheduled maintenance activities.	Actual maintenance costs during the demonstration period including labor, parts, supplies and subcontracts. Projected maintenance costs beyond the demonstration period.	Operations log, deployment site records, ElectraTherm maintenance schedule.
Major Overhaul	Costs for major overhaul (labor/parts/supplies) and any costs or loss of revenue for associated downtime.	Major overhaul not expected during the demonstration period.	ElectraTherm maintenance schedule and cost estimates.

Cost Element	Description	Data Tracked	Data Source
Hardware lifetime	Useful life of the system required for determination of lifecycle analysis time frame	ElectraTherm design specifications.	ElectraTherm design specifications.
Operator training	Formal training of on-site operators and mechanics to maintain and operate the system during normal operation.	Operator training costs (labor for trainer and operators).	ElectraTherm accounting. Estimates based on historical installations.
Revenues			
Energy production	Value of diesel fuel consumption offset by electricity produced directly by the ORC from waste heat and as offset by the ORC cooling benefit.	Electric power production (MWh).Baseline fuel economy measurements. Intensive test determination of the ORC cooling benefit. Diesel prices, escalation rates and incremental value of renewable energy (if any).	Power metering, baseline/intensive test data. Diesel fuel receipts at the deployment site. Renewable energy premium rates from various sources.

7.2 COST DRIVERS

In addition to the capital and operating costs associated with ORC integration, the key economic driver is the cost of diesel fuel consumption avoided due to the increased efficiency of the engine/genset with ORC integration. The annual fuel savings is the difference in baseline fuel consumption at the installation demand load (900 kWe) and the equivalent fuel consumption accounting for ORC power output and the reduction in cooling load, multiplied by the number of operating hours per year. In this analysis, the fuel savings is the total conservative increase in energy input for a given fuel input at nominal load conditions, as given in Table 4 in section 3.2.1.3 above. This amounts to 83.7 kW equivalent additional power output without additional fuel input, or equivalently, a fuel savings of 5.44 gallons per hour.

Diesel fuel prices have fluctuated wildly in recent years. According to the Energy Information Agency (EIA). The current US average diesel price is roughly $2.25 per gallon; however, this price follows a nearly 2 year-long decline in global fossil fuel prices. EIA expects that prices are beginning to increase again and projects a rate of increase of roughly 2 percent per year. Prior to the recent drop in oil prices, US diesel prices were relatively stable at around $4.25/gallon. GTMO is currently paying $3.25/gallon for diesel.

In active combat zones or occupied areas, fuel costs can be extremely high and relatively small fuel savings can be very important in terms of both dollars and lives. Depending on circumstances, the ‘fully burdened’ cost of a gallon of fuel to DoD has been cited as ranging between $10 and $1000 per gallon – with a frequently quoted value of $400/gallon for ‘in-theater’ fuel deliveries (DSB 2009). In addition, there is a significant cost in equipment and lives as fuel convoys are targeted and resources are diverted from defending troops to defending fuel deliveries. The payback period could indeed be very short under very high fuel cost scenarios; however, in these scenarios, it is not clear that ORC deployment would be deemed practical or warranted by commanders on the ground – as ORC deployment would involve additional equipment, training, maintenance requirements, etc. As the demonstration did not attempt to assess such factors, a very high fuel cost scenario was not included in the economic analysis.

7.3 COST ANALYSIS AND COMPARISON

ElectraTherm provided current initial MSRP capital and operating/maintenance costs over the 20 year expected lifetime of the unit. ElectraTherm has developed a very detailed 20-year maintenance schedule validated based on actual operating experience

Southern modeled expected economic performance based on these data, measured performance data, and current diesel fuel costs for GTMO and representative diesel fuel costs for the US as discussed above (section 7.2). Inputs to the BLCC model are documented in Table 11 below including all data sources and assumptions. BLCC model results for varying fuel costs are given in Table 12 below. Fuel cost changes over the system lifetime are modeled using US average escalation rates per BLCC version 5.3-15.

Economic results are based on 95% availability or 8322 operating hours per year. This is a reasonable assumption as ElectraTherm's current fleet has accumulated well over half a million operating hours at >97% availability.

The results in Table 12 assume an ORC integration cooling benefit or reduction in cooling load on the engine of 45 kW, which is considered a conservative value for this demonstration based on test data and additional considerations as presented above in section 3.2.1.3.

Economic results are representative of a 65 °F annual average ambient temperature corresponding to Pt. Hueneme baseline/integrated test conditions. This temperature is representative of global average temperatures in temperate latitudes. In tropical latitudes, integrated system performance will be somewhat reduced due to reduced performance of the air-cooled dry cooler. In high latitudes, system performance will be enhanced due to increased cooling system performance.

At current fuel costs ($2.25/gallon), adding the ORC to a packaged genset will pay for itself in year six. That said, fuel costs are currently at a historic low and are projected to increase. At current GTMO fuel costs ($3.25/gallon) and at recent stable trending fuel costs ($4.00/gallon), the system pays for itself in year 4. These economic results are based on measured performance at the ambient temperature during the baseline/integrated ambient temperature during testing at Pt. Hueneme, CA (~65F), representative of temperature latitudes.

To present an idea of expected economics in other conditions that might be encountered at installations across the globe, ElectraTherm's TORQUE model was used to estimate performance for installations in hypothetical tropical and high-latitude locations. On this basis, the expected economic performance at GTMO (tropical) can be estimated for various fuel costs, For example, at a fuel cost of $3.25/gallon (April 2016 GTMO value), simple and discounted payback would be expected to occur in year 5. Dtails are presented in Table 13.

Table 12. BLCC Inputs for Projected Economics

BLCC LCCA Element	Value	Units	Data Sources and Notes
BLCC Module v5.3-15, 2015	na	na	Milcon Analysis, Energy Project
Constant Dollar Analysis	Yes	na	Per non-financed project. Discount rate exlusive of inflation.
Discount Rate	3%	%	Per OMB Circular A94 2015. Mid-year discounting.
Base Date	4/1/2015	Date	Consistent with starting month for DOE energy price escalation rates used in the BLCC.
Service Date	4/1/2015	Date	Service date modeled to coincide with base date.
Study Period	20	years	Based on expected service life of the ElectraTherm ORC
Operating Hours per year	8322	hours	95% availability.
Nominal Engine Load	900	kWe	Prime unlimited service.
Baseline Engine Fuel Consumption at 900 kW Nominal Load	66.9/557,132	gph/gpy	Based on May, 2013 baseline fuel economy test conducted by Southern.
Integrated System Fuel Consumption at 900 kW Nominal Load	61.5/511,860	gph/gpy	Based on 'conservative' fuel savings as defined in section 3.2.1.3.
Annual Fuel Savings	5.44/45,272	gph/gpy	Difference
Energy Cost (Diesel)	3.25	$/gallon	GTMO fuel cost as of April, 2016. ROI also calculated based on $2.25 and $4.00 per gallon fuel cost reflecting recent volatility in fuel prices.
Capital Component: FP250, Investment Cost	$551,915	$	Total installed cost. Includes: ElectraTherm SRI/DoD ORC engine, system packaging/integration, exhaust gas heat exchanger, dry cooler, ISO containers, BoP, site prep, installation/commissioning. Source: ElectraTherm.
Capital Component: FP250, Investment Cost, Residual Value	$0	%	Straight line proration over study period (system lifetime) per FEMP 135 manual.
Capital Component: FP250, Replacement Cost	$0	$	Capital replacements are assumed to be funded from capital accounts rather than current accounts. This may have tax implications. For this analysis, replacements presumed to be funded from operating accounts rather than from capital accounts.
20 year cumulative replacement parts cost	$45,370	$	ElectraTherm maintenance schedule. 2015 prices.
20 year cumulative labor cost	$12,458	$	ElectraTherm maintenance schedule. $55/hour labor rate.
20 year annualized ElectraTherm OM&R	$2,891	$	Annual average parts and labor. 20 year lifetime. Does not include EGHX maintenance. Labor rate $55/hr. Source: ElectraTherm.
Annual EGHX Maintenance	$880	$	16 hours per year based on Aprovis requirements. Labor rate $55/hour.
Total annual OM&R	$3,771	$	ElectraTherm + Aprovis

Table 13. Project Economics: Total System Benefit - ORC Electric Output plus Cooling Load Reduction (45 kW)

Case	Engine Load (kW)	Net ORC Output (kW)	Annual Average Temp	20 yr net savings ($1000's)	SIR	AIRR	Simple/ Discounted Payback (year occurs)	Annual Fuel Savings (gallons)
Results based on measured performance								
April 2016 Average US fuel cost (#2 diesel). $2.25/gallon	900	38.7	65F	$ 1,256	3.41	9.52%	6/6	45,272
April 2016 GTMO fuel cost (F76). $3.25/gallon	900	38.7	65F	$ 2,072	4.97	11.60%	4/4	45,272
2010-2014 average US fuel cost trend (#2 diesel). $4.00/gallon.	900	38.7	65F	$ 2,683	6.15	12.79%	4/4	45,272
Alternative Cases (based on model results)								
April 2016 Average US fuel cost (#2 diesel). $2.25/gallon	900	47.4	40F	$ 1,439	3.76	10.50%	5/6	49,769
April 2016 GTMO fuel cost (F76). $3.25/gallon	900	47.4	40F	$ 2,335	5.48	12.14%	4/4	49,769
2010-2014 average US fuel cost trend (#2 diesel). $4.00/gallon.	900	47.4	40F	$ 3,007	6.77	13.34%	3/4	49,769
April 2016 Average US fuel cost (#2 diesel). $2.25/gallon	900	30.2	80F	$ 1,078	3.07	8.94%	6/7	40,862
April 2016 GTMO fuel cost (F76). $3.25/gallon	900	30.2	80F	$ 1,814	4.48	11.02%	5/5	40,862
2010-2014 average US fuel cost trend (#2 diesel). $4.00/gallon.	900	30.2	80F	$ 2,366	5.54	12.20%	4/4	40,862
Note: All figures assume 45 kW additional savings due to cooling load reduction.								

8.0 IMPLEMENTATION ISSUES

No implementation issues were encountered with the ElectraTherm ORC generator itself, ORC packaging, or with the integration of the ORC, radiator and genset. However, there were issues associated with the engine packaging and controls installation that caused significant project delays and ultimately resulted in failure to commission the integrated system on the GTMO grid leading to early termination of the demonstration before field measurements data could be collected. The following presents a brief history of these events and discusses the results of a root cause investigation into the ultimate cause of the failure.

Early in the project, ElectraTherm conducted an exhaustive search for a suitable packager that could install the Cummins KTA50 engine/genset, exhaust gas heat exchanger, fuel tank, switchgear, plumbing, and controls in a standard 40 foot ISO container for ease of deployment. Ultimately, Cummins Rocky Mountain (CRM) in Denver, CO was selected as they appeared to have the expertise and the facilities required to perform the work in a professional and timely manner. ElectraTherm and MUSE traveled to Denver, met with Cummins project management, engineers and technicians and surveyed facilities prior to making the selection. A very detailed scope of work was negotiated that met project and MUSE requirements – and an aggressive schedule was agreed to for completing the work. Southern, ElectraTherm and MUSE provided all necessary equipment, drawings and specifications to CRM within the agreed timeframe.

Southern and MUSE traveled to Denver in September 2014 to conduct a final inspection of the completed packaging, but found that Cummins had barely initiated work to complete the job. Cummins provided no notice prior to the inspection trip that the work had not been completed as agreed. Thus alarmed, Southern, MUSE and ElectraTherm prepared a detailed punch list of items to be completed and requested weekly updates with photographs documenting progress. Despite diligent follow-up efforts on the part of the project team, progress reports from Cummins were sporadic and incomplete. A second inspection trip was made by ElectraTherm and MUSE in December and the punch list was updated with the hope of completing the work by the end of the year.

Although not all punch list items were fully completed, the engine container was finally shipped to Reno for integration with the ORC system in February 2015 in an effort to meet the much-delayed project schedule. CRM provided additional support in Reno; however, a significant number of incomplete items and workmanship issues were discovered during this time. Major concerns included: (1) engine control wiring and programming was incomplete and untested and (2) proper provision for jacket water piping to the ORC and external radiator had not been made. These issues, and others discovered as work progressed, caused additional delays. MUSE took the initiative to complete the controls wiring and made several out of scope trips to Reno to help ensure that the work was properly completed and fully tested. Despite these efforts, integrated system operation and controls optimization was not completed until June 2015.

As Cummins was unable to provide facilities for fully testing engine controls in grid parallel operation, the decision was taken to move the equipment to the MUSE facility at Pt. Hueneme, CA in early July 2015 for final commissioning and testing. Southern completed intensive testing of the integrated system during this time. MUSE made extensive efforts in Pt. Hueneme to complete controls wiring and programing and test the system in grid parallel operation; however, difficulties were encountered stemming from further CRM workmanship issues and MUSE was unable to complete these tasks before the system was scheduled to be shipped to GTMO. MUSE made the decision to complete final testing on site at GTMO. Southern was not made aware that the system had not been fully tested before shipment.

The engine (CHP) and ORC containers were successfully installed at Guantanamo Bay Naval Station (GTMO) during the week of August 17-24, 2015. During initial testing, the ORC operated and performed as expected, however, the engine would trip (shut itself down) after several hours of operation in parallel with the GTMO grid.

The MUSE team spent a great deal of time on site troubleshooting this issue with telephone support from CRM's controls contractor (Winn-Marion, W-M); however, the problem remained unresolved as of Sept. 1 when the MUSE team had to leave the site due to other commitments. An ElectraTherm (ET) engineer extended his stay on site to support the troubleshooting efforts in case the ORC may have been related to the issue. During this time, it was determined conclusively that neither the ORC, nor the cooling integration of the ORC with the engine was the cause of the trips. The trips occurred whether or not the ORC was connected to the system.

After much follow-on investigation, evaluation and discussion among all parties, including expert advice from Winn-Marion and Cummins, the team came to believe with high confidence that the root cause of the problem had been identified and could be corrected in the field. A second trip to GTMO was made by ElectraTherm and a W-M controls engineer in October to complete commissioning of the genset on the GTMO grid. During this trip, a number of additional workmanship issues within the CRM scope were discovered and corrected, and the unit was made ready to run. Unfortunately, before successful operation could be demonstrated, an arc flash event occurred within the generator housing, damaging the equipment. The arc flash was caused by improper location and mounting of a terminal block by CRM that, along with a poor wire termination, caused a signal wire to come loose and into contact with high voltage components. Although the damage appeared to be relatively minor, and may have been repairable on site, project budgets for all participants were stretched to the breaking point by this time. Given the difficulty and cost of conducting additional work at GTMO, and given reasonable concerns that further problems might be encountered, ESTCP made the decision to terminate the field deployment. Arrangements were then made to return the equipment to the States and transfer ownership to DoD.

9.0 REFERENCES

[1] Department of Defense, Annual Energy Management Report, Fiscal Year 2014. May 2015

[2] Lemort, Sylvain Quoilion and Vincent. Technological and Economical Survey of Organic Rankine Cycle. s.l. : European Conference on Economics and Management of Energy in Industry, 2009.

[3] Cost Effective Small Scale ORC Systems for Power Recovery From Low Enthalpy Geothermal Resources, I K Smith, N Stosic, A Kovacevic, R Langson (City University, London, UK), ElectraTherm Inc, Carson City, NV.

[4] T. Wu and K.J. McAuley, International Harverster Co., "Predicting Diesel Engine Performance at Various Ambient Conditions", SAE paper 730148.

[5] Green Machine Operating Manual, V2.0E, ElectraTherm, Inc., May 2011.

[6] USEPA, Emission Factors for Greenhouse Gas Inventories, November 2011.

[7] Intergovernmental Panel on Climate Change (IPCC) (1995); Second Assessment Report.

APPENDICES

Appendix A: Points of Contact

Name	Title	Email	Office
Tim Hansen	Southern Principle Investigator	hansen@southernresearch.org	919-282-1052
Eric Ringler	Southern Project Leader	ringler@southernresearch.org	919-282-1050 ext 2242
Tom Brokaw	ElectraTherm Project Manager	tbrokaw@ElectraTherm.com	775.398.4680 ext. 137
Matthew Robison	MUSE Program Manager	matthew.robison1@navy.mil	805-982-6960
Juan Aragon	MUSE Engineering Chief	juan.aragon@navy.mil	805-982-4607

Appendix B: Design Drawings

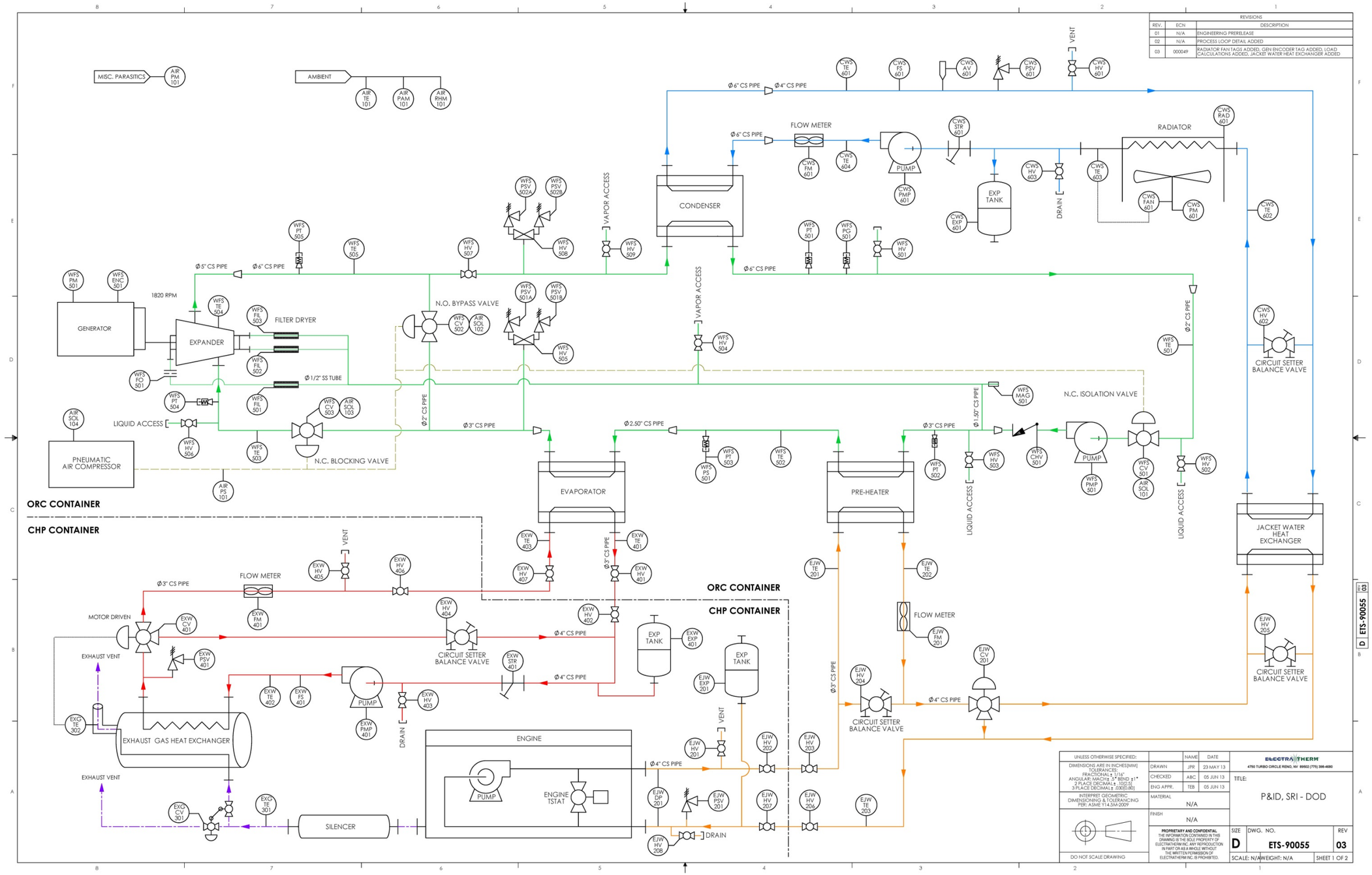
REVISIONS
REV. ECN DESCRIPTION
01 N/A ENGINEERING PRERELEASE
02 N/A PROCESS LOOP DETAIL ADDED
03 000049 RADIATOR FAN TAGS ADDED, GEN ENCODER TAG ADDED, LOAD CALCULATIONS ADDED, JACKET WATER HEAT EXCHANGER ADDED
MISC. PARASITICS
AIR PM 101
AMBIENT
AIR TE 101
AIR PAM 101
AIR RHM 101
VENT
CWS TE 601
CWS FS 601
CWS AV 601
CWS PSV 601
CWS HV 601
Ø6" CS PIPE
Ø4" CS PIPE
FLOW METER
CWS FM 601
CWS TE 604
PUMP
CWS PMP 601
CWS STR 601
RADIATOR
CWS RAD 601
CWS HV 603
CWS TE 603
DRAIN
CWS FAN 601
CWS PM 601
CWS TE 602
EXP TANK
CWS EXP 601
CONDENSER
VAPOR ACCESS
WFS PSV 502A
WFS PSV 502B
WFS HV 508
WFS HV 509
WFS PT 501
WFS PC 501
WFS HV 501
WFS PT 505
WFS TE 505
WFS HV 507
Ø5" CS PIPE
Ø6" CS PIPE
WFS PM 501
WFS ENC 501
1820 RPM
GENERATOR
EXPANDER
WFS TE 504
WFS FIL 503
FILTER DRYER
WFS FIL 502
WFS FC 501
N.O. BYPASS VALVE
WFS CV 502
AIR SOL 102
WFS PSV 501A
WFS PSV 501B
WFS HV 505
WFS HV 504
Ø1/2" SS TUBE
WFS PT 504
WFS FIL 501
WFS CV 503
AIR SOL 103
LIQUID ACCESS
AIR SOL 104
WFS HV 506
WFS TE 503
N.C. BLOCKING VALVE
PNEUMATIC AIR COMPRESSOR
AIR PS 101
Ø2" CS PIPE
Ø3" CS PIPE
Ø2.50" CS PIPE
WFS PT 503
WFS PS 501
WFS TE 502
EVAPORATOR
PRE-HEATER
WFS PT 502
Ø1.50" CS PIPE
WFS MAG 501
N.C. ISOLATION VALVE
WFS HV 503
WFS CHV 501
PUMP
WFS PMP 501
WFS CV 501
AIR SOL 101
WFS HV 502
WFS TE 501
CIRCUIT SETTER BALANCE VALVE
CWS HV 602
JACKET WATER HEAT EXCHANGER
ORC CONTAINER
CHP CONTAINER
EXW TE 403
EXW TE 401
EXW HV 407
EXW HV 401
EXW HV 405
EXW HV 406
EXW FM 401
MOTOR DRIVEN
EXW CV 401
EXW PSV 401
EXHAUST VENT
EXW HV 404
EXW HV 402
CIRCUIT SETTER BALANCE VALVE
EXW STR 401
EXP TANK
EXW EXP 401
EXW TE 402
EXW FS 401
PUMP
EXW PMP 401
EXW HV 403
EXG TE 302
EXHAUST GAS HEAT EXCHANGER
EXG CV 301
EXG TE 301
SILENCER
ENGINE
PUMP
ENGINE TSTAT
EJW DP 201
EJW PSV 201
EJW HV 208
EJW HV 201
EJW HV 202
EJW HV 203
EJW HV 207
EJW HV 206
EJW TE 203
EJW TE 201
EJW TE 202
EJW EXP 201
EJW HV 204
EJW CV 201
EJW FM 201
EJW HV 205
UNLESS OTHERWISE SPECIFIED:
DIMENSIONS ARE IN INCHES[MM]
TOLERANCES:
FRACTIONAL ± 1/16"
ANGULAR: MACH ± .5° BEND ±1°
2 PLACE DECIMAL ± .10[2.5]
3 PLACE DECIMAL ± .030[0.80]
INTERPRET GEOMETRIC DIMENSIONING & TOLERANCING PER: ASME Y14.5M-2009
DO NOT SCALE DRAWING
NAME DATE
DRAWN JPR 23 MAY 13
CHECKED ABC 05 JUN 13
ENG APPR. TEB 05 JUN 13
MATERIAL N/A
FINISH N/A
PROPRIETARY AND CONFIDENTIAL
THE INFORMATION CONTAINED IN THIS DRAWING IS THE SOLE PROPERTY OF ELECTRATHERM INC. ANY REPRODUCTION IN PART OR AS A WHOLE WITHOUT THE WRITTEN PERMISSION OF ELECTRATHERM INC. IS PROHIBITED.
ELECTRATHERM
4750 TURBO CIRCLE RENO, NV 89502 (775) 398-4680
TITLE:
P&ID, SRI - DOD
SIZE D
DWG. NO. ETS-90055
REV 03
SCALE: N/A WEIGHT: N/A
SHEET 1 OF 2
D ETS-90055 03

ORC 69.2 kWe Gross Power Output
Engine Full Load, Clean EGHX
77°F (25°C) Ambient

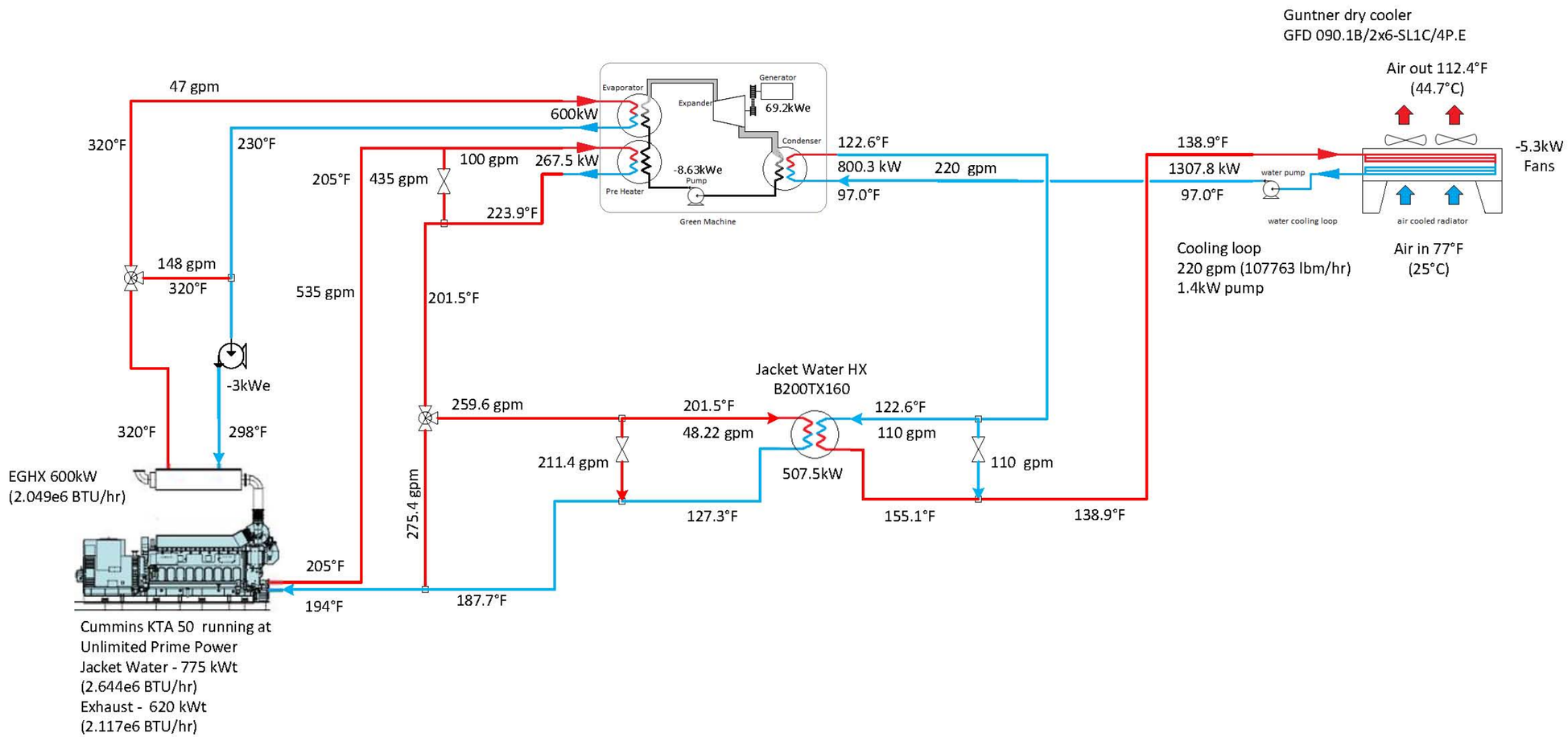

Appendix C: Monitoring Instrument Specifications

Loop/Zone	Tag	Purpose	Output	Sensor Type	Nominal Reading	Min Reading	Max Reading	Sensor Range Lo	Sensor Range Hi	Units	Nominal Accuracy	Sensor Mfg	Sensor Model	Transmitter Mfg	Transmitter Model
ORC PLC Timestamp	timestamp	date/time log and kWh calculation	Modbus	na	na	na	na	na	na	yyyymmdd:tt:tt	na	na	na	na	na
ORC Generator Output	ORC_kW_Out	ORC generator output	Modbus	power meter	50	0	100	0	144	kW	0.50%	Veris	E51C2	na	na
EGHX	TE403	heat input to ORC evaporator	ohm	Class A RTD -- DI	320	284	320	-58	572	F	0.06%	Automation Direct	RTD1-H04L01-02	na	na
EGHX	TE401	heat input to ORC evaporator	ohm	Class A RTD -- DI	227	227	235	-58	572	F	0.06%	Automation Direct	RTD1-H04L01-02	na	na
EGHX	FM401	heat input to ORC evaporator	4-20 mA	magnetic	43	43	83	18	908	gpm	0.40%	Alia	AMF900-P0080-SAE80-010-NT1	Alia	AMC2100-AC-SW-NN
Jacket Water (JW)	TE201	heat input to ORC preheater	ohm	Class A RTD -- DI	184	170	210	-58	572	F	0.06%	Automation Direct	RTD1-H04L01-02	na	na
Jacket Water (JW)	TE203	heat input to ORC preheater	ohm	Class A RTD -- DI	205	180	210	-58	572	F	0.06%	Automation Direct	RTD1-H04L01-02	na	na
Jacket Water (JW)	FM201	heat input to ORC preheater	4-20 mA	magnetic	100	50	120	18	908	gpm	0.40%	Alia	AMF900-P0080-SAE80-010-NN	Alia	AMC2100-AC-SW-NN
Jacket Water (JW)	PM201	radiator fan parasitic load	Modbus	power meter	4	0	50	0	144	kW	0.50%	Veris	E51C2	na	na
Jacket Water (JW)	DP201	pump head	4-20 mA	dP transducer	tbd	0	15	0	30	psi	0.075%	Alia	ADP9000-D-9-6-NNN-P-4-EX-HT	na	na
Dry Cooler (DC)	TE601	heat removed by dry cooler - for energy balance	ohm	Class A RTD	92	55	100	-58	572	F	0.06%	Automation Direct	RTD1-H04L01-02	na	na
Dry Cooler (DC)	TE602	heat removed by dry cooler - for energy balance	ohm	Class A RTD	120	85	130	-58	572	F	0.06%	Automation Direct	RTD1-H04L01-02	na	na
Dry Cooler (DC)	FM601	heat removed by dry cooler - for energy balance	4-20 mA	magnetic	220	200	240	32	1563	gpm	0.40%	Alia	AMF900-P0080-SAE80-010-N	Alia	AMC2100-AC-SW-NN
Dry Cooler (DC)	PM601	fan load, parasitic	Modbus	power meter	10.6	0	10.6	0	144	kW	0.50%	Veris	E51C2	na	na
Misc Parasitic load	PMP401	EGHX pump power (variable)	Modbus	power meter	1.7	1	2.5	0	144	kW	0.50%	Veris	E51C2	na	na
Misc Parasitic load	PMP601	dry cooler pump power			2.5	2	4								
Misc Parasitic load	PMP501	Refrigerant pump power	Modbus	power meter	7.6	5.4	7.6	0	144	kW	0.50%	Veris	E51C2	na	na
Misc Parasitic load	AC101	Pneumatic air compressor			0.5	0	1								
Misc Parasitic load	PM_Aux	controls and aux power			0.4	0	1								
Ambient	TE101	Ambient temperature for ORC and genset de-rating	ohm	Class B RTD	77	0	100	-58	482	F	0.12%	RTD Company	517MP2C3S	na	na
Ambient	PT101	Ambient pressure for genset de-rating	4-20 mA	pressure transducer	30	26	32	26	32	psia	0.075%	Alia	APT8000-A-4-NNNN-P-N-NN	na	na
Ambient	RH101	Ambient relative humidity	4-20 mA	RH sensor	30	0	100	0	100	%	1%	Intempco	HTX01-C01	na	na
KTA50	FF_supply	supply fuel flow	4-20 mA	coriolis mass flow	1500	0	2000	0	2000	lb/hr	0.10%	Krohne	Optimass7000-T10	na	na
KTA50	FF_return	return fuel flow	4-20 mA	coriolis mass flow	1050	0	2000	0	2000	lb/hr	0.10%	Krohne	Optimass7000-T10	na	na
KTA50	TT_intake_L	intake air temperature - left	4-20 mA	RTD	tbd	tbd	tbd	tbd	tbd	F	tbd	tbd	tbd	tbd	tbd

Loop/Zone	Tag	Purpose	Output	Sensor Type	Nominal Reading	Min Reading	Max Reading	Sensor Range Lo	Sensor Range Hi	Units	Nominal Accuracy	Sensor Mfg	Sensor Model	Transmitter Mfg	Transmitter Model
KTA50	TT_intake_R	intake air temperature - right	4-20 mA	RTD	tbd	tbd	tbd	tbd	tbd	F	tbd	tbd	tbd	tbd	tbd