FINAL REPORT

Immersion Cooling of Electronics in DoD Installations

ESTCP Project EW-201347

MAY 2016

Henry Coles
Magnus Herrlin
Energy Technologies Area

Distribution Statement A
This document has been cleared for public release

REPORT DOCUMENTATION PAGE

Form Approved
OMB No. 0704-0188

Public reporting burden for this collection of information is estimated to average 1 hour per response, including the time for reviewing instructions, searching existing data sources, gathering and maintaining the data needed, and completing and reviewing this collection of information. Send comments regarding this burden estimate or any other aspect of this collection of information, including suggestions for reducing this burden to Department of Defense, Washington Headquarters Services, Directorate for Information Operations and Reports (0704-0188), 1215 Jefferson Davis Highway, Suite 1204, Arlington, VA 22202-4302. Respondents should be aware that notwithstanding any other provision of law, no person shall be subject to any penalty for failing to comply with a collection of information if it does not display a currently valid OMB control number. **PLEASE DO NOT RETURN YOUR FORM TO THE ABOVE ADDRESS.**

1. REPORT DATE *(DD-MM-YYYY)*
May 2016

2. REPORT TYPE
Final Report

3. DATES COVERED *(From - To)*
3/2013 - 2/2016

4. TITLE AND SUBTITLE
Immersion Cooling of Electronics in DoD Installations

5a. CONTRACT NUMBER
AWD00000382

5b. GRANT NUMBER
W74RDV50785273

5c. PROGRAM ELEMENT NUMBER

6. AUTHOR(S)
Henry Coles
Magnus Herrlin

5d. PROJECT NUMBER
EW-201347

5e. TASK NUMBER

5f. WORK UNIT NUMBER

7. PERFORMING ORGANIZATION NAME(S) AND ADDRESS(ES)

Lawrence Berkeley National Laboratory
One Cyclotron Road
Berkeley, California 94720

8. PERFORMING ORGANIZATION REPORT NUMBER

LBNL-1005666

9. SPONSORING / MONITORING AGENCY NAME(S) AND ADDRESS(ES)
SERDP/ESTCP
4800 Mark Center Drive
Suite 17D08
Alexandria, Virginia 22350

10. SPONSOR/MONITOR'S ACRONYM(S)

11. SPONSOR/MONITOR'S REPORT NUMBER(S)

12. DISTRIBUTION / AVAILABILITY STATEMENT

Approved for public release; distribution is unlimited

13. SUPPLEMENTARY NOTES

14. ABSTRACT

A considerable amount of energy is consumed to cool electronic equipment in data centers. A method for substantially reducing the energy needed for this cooling was demonstrated. The method involves immersing electronic equipment in a non-conductive liquid that changes phase from a liquid to a gas. The liquid used was 3M Novec 649. Two-phase immersion cooling using this liquid is not viable at this time. The primary obstacles are IT equipment failures and costs. However, the demonstrated technology met the performance objectives for energy efficiency and greenhouse gas reduction. Before commercialization of this technology can occur, a root cause analysis of the failures should be completed, and the design changes proven.

15. SUBJECT TERMS
Immersion Cooling, Two-Phase Cooling, Two-Phase Immersion Cooling, Data Center Cooling, Data Center Cooling Efficiency, Data Center Efficiency, Novec 649

16. SECURITY CLASSIFICATION OF:			**17. LIMITATION OF ABSTRACT**	**18. NUMBER OF PAGES**	**19a. NAME OF RESPONSIBLE PERSON**
					Magnus Herrlin
a. REPORT	**b. ABSTRACT**	**c. THIS PAGE**		111	**19b. TELEPHONE NUMBER** *(include area code)*
UNCLASSIFIED	UNCLASSIFIED	UNCLASSIFIED			650 486 6515

Standard Form 298 (Rev. 8-98)
Prescribed by ANSI Std. Z39.18

ABSTRACT

A considerable amount of energy is consumed to cool electronic equipment in data centers. A method for substantially reducing the energy needed for this cooling was demonstrated. The method involves immersing electronic equipment in a non-conductive liquid that changes phase from a liquid to a gas. The liquid used was 3M Novec 649. Two-phase immersion cooling using this liquid is not viable at this time. The primary obstacles are IT equipment failures and costs. However, the demonstrated technology met the performance objectives for energy efficiency and greenhouse gas reduction. Before commercialization of this technology can occur, a root cause analysis of the failures should be completed, and the design changes proven.

Table of Contents

1.1 INTRODUCTION 1
1.2 BACKGROUND 1
1.3 OBJECTIVE OF THE DEMONSTRATION 1
1.4 REGULATORY DRIVERS 2
2.1 TECHNOLOGY DESCRIPTION 4
2.2 TECHNOLOGY OVERVIEW 4
2.3 TECHNOLOGY DEVELOPMENT 6
2.4 ADVANTAGES AND LIMITATIONS OF THE TECHNOLOGY 9
3.1 PERFORMANCE OBJECTIVES 12
3.2 PERFORMANCE OBJECTIVE RESULTS 12
3.3 PERFORMANCE OBJECTIVE METRICS 14
4.1 FACILITY/SITE DESCRIPTION 21
4.2 FACILITY/SITE LOCATION AND OPERATIONS 23
4.3 FACILITY/SITE CONDITIONS 26
5.1 TEST DESIGN 27
5.2 CONCEPTUAL TEST DESIGN 27
5.3 BASELINE CHARACTERIZATION 31
5.4 DESIGN AND LAYOUT OF TECHNOLOGY COMPONENTS 32
5.5 OPERATIONAL TESTING 35
5.6 SAMPLING PROTOCOLS 36
5.7 SAMPLING RESULTS 38
6.1 PERFORMANCE ASSESSMENT 40
6.2 IMPROVED COOLING ENERGY EFFICIENCY [PO1] 40
6.3 REDUCED OVERALL DATA CENTER SITE ENERGY CONSUMPTION [PO2] 44
6.4 IMPROVED COMPUTATIONAL ENERGY EFFICIENCY [PO3] 44
6.5 LOW CONCENTRATION OF NOVEC 649 VAPORS DURING NORMAL OPERATION [PO4] 46
6.6 LOW CONCENTRATION OF NOVEC 649 VAPORS DURING STARTUP OR MAINTENANCE [PO5] 49

6.7 REDUCTION IN GREENHOUSE GAS EMISSIONS [PO6] 51
6.8 DIELECTRIC LIQUID LOSS [PO7] 53
6.9 SYSTEM ECONOMICS (QUALITATIVE) [PO8] 55
6.10 LOWER CPU CHIP TEMPERATURES [PO9] 60
6.11 HIGH USER SATISFACTION, LOW NUMBER OF CONCERNS (QUALITATIVE) [PO10] 62
6.12 IMPROVED IT POWER DENSITY (QUALITATIVE) [PO11] 64
6.13 SYSTEM MAINTENANCE (QUALITATIVE) [PO12] 67
7.1 COST ASSESSMENT 69
7.2 COST MODEL 69
7.3 COST DRIVERS 72
7.4 COST ANALYSIS AND COMPARISON 74
8.1 IMPLEMENTATION ISSUES 75
8.2 REGULATIONS 75
8.3 END-USER CONCERNS AND DECISION-MAKING FACTORS 75
8.4 ELECTRONICS FAILURES 75
8.5 PERFLUOROISOBUTYLENE (PFIB) EXPOSURE 78
8.6 LIQUID LOSS 78
8.7 SERVICE VISIBILITY 78
8.8 USE OF GLOVES FOR SERVICE 79
8.9 LID DURABILITY 79
8.10 PROCUREMENT ISSUES 79
9.0 REFERENCES 80
APPENDICES 82
Appendix A: Points of Contact 82
Appendix B: Instrument Calibration 83
Appendix C: Simulation Model and Simulation Details 85
Appendix D: Base Case Test Measurements 92

List of Acronyms

ASHRAE	American Society of Heating, Refrigeration, and Air-Conditioning Engineers
BLCC	Building Life Cycle Cost
CDE	carbon dioxide equivalent
CDU	cooling distribution unit
CO_2	Carbon Dioxide
CPU	central processing unit
DC	data center
DoD	U.S. Department of Defense
DOE	U.S. Department of Energy
DOP	dioctyl phthalate
EO	Executive Order
EPA	U.S. Environmental Protection Agency
ESTCP	Environmental Security Technology Certification Program
FEMP	Federal Energy Management Program
FK	fluoroketone
FPGA	field programmable gate array
gpm	gallons per minute
HFE	hydrofluoroether
HPC	high-performance computing
IB	InfiniBand
IRU	individual rack unit
IT	information technology
kW	kilowatt (one thousand watts)
kWh	kilowatt hour
LBNL	Lawrence Berkeley National Laboratory
LINPACK	LINear equations software PACKage
MFLOPS	million floating point operations per second
MSDS	Material Safety Data Sheet
MW	mega (one million) watts
NIST	National Institute of Standards and Technology
NOAEL	no observed adverse effect limit
NPV	net present value
NRL	Naval Research Laboratory
OBI	open-bath immersion
PFIB	perfluoroisobutylene
PFPA	perfluoropropionic acid
PI System	Process Information also Greek Letter (OSIsoft tradename)
PO	Performance Objective

ppm	parts per million by mass
ppmV	parts per million by volume
PUE	power usage effectiveness (The Green Grid, 2015)
pPUE	partial power usage effectiveness
SDS	safety data sheet
SGI	Silicon Graphics Inc.
SPPDG	Special Purpose Processor Development Group (Mayo Clinic)
TF	Teraflop
TRL	Technology Readiness Level
TWA	time weighted average
UPS	uninterruptible power supply, also uninterruptible power source
W	watt
WSE	water-side economizer

List of Figures

Figure 2-1: Open-Bath Immersion (OBI) Cooling Basics 5
Figure 2-2: Demonstration Cooling System Schematic 6
Figure 4-1: The Base Case Test Setup 22
Figure 4-2: Pilot Test Setup at SGI 23
Figure 4-3: Dry Cooler Outside of NRL Data Center 24
Figure 4-4: Bath Located in the NRL Data Center Room 25
Figure 4-5: NRL Demonstration Setup 25
Figure 5-1: Base Case Test Configuration 28
Figure 5-2: Pilot Test - IT Running at Full Power. 29
Figure 5-3: Immersion Case Test Installation (Demonstration) 30
Figure 5-4: Immersion System Cooling with a Dry Cooler 30
Figure 5-5: Base Case Test Sampling Point Schematic 32
Figure 5-6: Bath Components and Subsystem Reference Diagram 33
Figure 5-7: Immersion Case Test Sampling Point Schematic 37
Figure 6.1-1: IT Cooling Technology and Data Center Efficiency Combinations 41
Figure 6.1-2: Immersion Cooling - Data Center Heat Rejection Combinations 41
Figure 6.1-3: Calculated Cooling pPUE And Measured Constituents 43
Figure 6.3-1: Other Computational Energy Efficiency Results 46
Figure 6.4-1: Breathing Zone Vapor Concentration Compared to Floor Zone Vapor Concentration During Normal Operation 47
Figure 6.4-2: Breathing Zone Novec 649 Vapor Measurements and Calculated 8-Hour Time Weighted Averages for Normal Operation 48

Figure 6.5-1: Startup Period Breathing Zone Novec 649 Vapor Concentration Measurements. Vertical axis is in units of ppmV 50
Figure 6.7-1: Liquid Level and Temperature Measurement Data 55
Figure 6.8-1: BLCC Version 5.3-15 Inputs 58
Figure 6.8-2: BLCC Version 5.3-15 Calculation Summary 59
Figure 6.9-1: Base Case CPU Temperatures 60
Figure 6.9-2: Immersion Case CPU Temperatures 61
Figure 6.11-1: Base Case SGI ICE X M-Cell Maximum Density Layout 65
Figure 6.11-2: Immersion Case Layout Using Demonstrated Dimensions 66
Figure 8-1: Failed Power Supply FET (courtesy of Delta Electronics) 75
Figure 8-2: "Goop" With Whisker (courtesy of 3M) 76
Figure 8-3: Metallic Whiskers (courtesy 3M) 77
Figure C-1: Low-Efficiency Data Center - Base Case A 87
Figure C-2: Low-Efficiency Data Center - Immersion (1A) Cooling Uses Building Cooling Water 87
Figure C-3: Low-Efficiency Data Center - Immersion (2A) Cooling with Added Dry Cooler ... 88
Figure C-4: Low-Efficiency Data Center - Immersion (3A) Cooling with Added Cooling Tower 88
Figure C-5: High-Efficiency Data Center – Base Case B 89
Figure C-6: High-Efficiency Data Center - Immersion (1B) Cooling with Building Cooling Water 89
Figure C-7: High-Efficiency Data Center - Immersion (2B) Cooling with Added Dry Cooler ... 90
Figure C-8: High-Efficiency Data Center - Immersion (3B) Cooling with Added Cooling Tower 90

List of Tables

Table 3-1: Performance Objective Results 12
Table 5-1: Base Case Test Sampling Point Details 36
Table 5-2: Immersion Case Test Sampling Point Details 38
Table 5.6-1: Report Locations of Data and Results Figures and Tables 39
Table 6.1-1: Combinations Simulated 41
Table 6.1-2: Simulation Results Summary 43
Table 6.3-1: Compute Performance, IT Equipment Power, and Computational Energy Efficiency 45
Table 6.6-1: CDE Changes Based on Total Data Center Energy 52
Table 6.6-2: CDE Changes Based on Cooling Energy 52
Table 6.8-1: Immersion Case Results and Forecasted Data 56
Table 6.12-1: Immersion Case and Base Case Maintenance Frequency 68

Table 7-1: Cost Elements 70
Table B-1: Level Sensor Translation Experimental Data And Results 84
Table B-2: Liquid Level Related Conversions 84
Table C-2: Modeling Results by Component 91
Table D-1: Base Case Test Energy Input 93
Table D-2: Base Case Cooling Rack (Rack Air Cooling) Measurements and Results 94
Table D-3: Base Case CDU (Rack Liquid Cooling) Measurements and Results 95
Table D-4: Base Case Unaccounted Power 96

ACKNOWLEDGEMENTS

This project was primarily supported by the U.S. Department of Defense's Environmental Security Technology Certification Program (ESTCP), project EW-201347, additionally supported by the Assistant Secretary for Energy Efficiency and Renewable Energy of the U.S. Department of Energy under Contract No. DE-AC02-05CH11231. Collaborators on this project included Lawrence Berkeley National Laboratory (LBNL) (William Tschudi), U.S. Naval Research Laboratory (NRL) (Dr. Jeanie Osburn), 3M (Phil Tuma), Silicon Graphics International Corp. (SGI) (Tim McCann), Intel Corporation (Dr. Michael Patterson), and Schneider Electric (Ozan Tutunoglu and John Bean).

The research team is very grateful for the support and guidance provided by Katelyn R. Staton and Vern Novstrup from the U.S. Navy's Naval Facilities Engineering and Expeditionary Warfare Center (NAVFAC EXWC) as the ESTCP technical advisors for this project.

The project could not have been completed without the technical expertise and contributions from Chas Williams at NRL. We want to thank Heidi Hornstein and Dr. Sergio Tafur, also from NRL, for providing configuration and management of the IT equipment during the demonstration.

We acknowledge the support of Russ Stacy (SGI) for his work on the baseline (Base Case) and pilot testing setup and data collection. In addition, thanks go to Cheng Lao also from SGI, for his guidance on the application and operation of benchmarking software. We are grateful to Xindi Cai (Schneider-Electric) for thermal controls design and programming.

Many thanks to Vali Sorell (Syska Hennessy Group) and Steve Greenberg (LBNL) for technical guidance and development of simulation assumptions.

The authors wish to thank Steve Polzer from the Mayo Clinic Special Purpose Processor Development Group (SPPDG) for a laboratory tour, discussions, and documentation of two-phase immersion cooling development activities.

EXECUTIVE SUMMARY

Introduction

The demonstrated two-phase open-bath immersion (OBI) cooling technology was targeted to substitute for, or be used in conjunction with, other electronic equipment cooling technologies to significantly reduce the electrical energy needed for high-performance computing (HPC) data center operation across the U.S. Department of Defense (DoD).

In addition to the electrical energy supplied to the information technology (IT) equipment at HPC sites, a significant amount of electrical energy (cooling energy) is required to remove the heat generated by the IT equipment. In fact, energy used for cooling is often 50 to 75 percent of the electrical energy supplied to the electronic equipment. The demonstrated OBI technology significantly reduces the cooling energy by immersing the electronic equipment in a bath of dielectric (non-conducting) liquid.

The dielectric liquid used for this demonstration was 3M Novec 649 Engineered Fluid. The heat from the electronic components is rejected as the Novec liquid undergoes a phase change (liquid to gas). This phase change takes place at 49°C, so relatively warm cooling water can be used to condense the vapor back to a liquid. A warm-water cooled bath is more energy efficient than typical cooling systems that use much cooler water from compressor-based systems. The water used to cool two-phase immersion-cooled electronics can be provided by simple, economical "dry coolers" if space allows. A dry cooler is a water-to-air heat exchanger that includes a fan placed in the outside environment—very similar in concept to an automotive radiator.

This demonstration, which took place at the U.S. Naval Research Laboratory (NRL) in Washington D.C., consisted of a commercially available high-performance computer immersed in the 3M Novec 649 liquid. The immersion cooling system was tested at a high computer load. Cooling for the bath was provided by a dry cooler located outside an HPC center at NRL.

Summary of Performance Objectives and Results

The demonstration evaluated twelve performance objectives. The performance evaluations were conducted on the same computer system being cooled with a standard cooling option (Base Case) and with the demonstrated immersion cooling technology. Some performance objectives had a goal and a "stretch" goal. The goal is the basic performance objective, and the stretch goal is a more ambitious objective.

Some efficiency-related measurements, planned as part of evaluating certain performance objectives, were not available, due to IT equipment failures. Simulations were used instead to

provide meaningful results for the affected performance objectives.

PO1: Improved Cooling Energy Efficiency

The cooling energy savings objective was met. The savings goal was 50 percent, and the demonstration resulted in 72 percent savings.

PO2: Reduced Overall Data Center Site Energy Consumption

Overall site energy includes the energy needed by the IT equipment, data center infrastructure, and all energy consuming equipment not normally thought of as part of a data center such as generator block heaters and primary power distribution losses.

The overall data center energy reduction objective was met. The goal was a reduction of 15 percent. The results were a reduction of 19 percent.

PO 3: Improved Computational Energy Efficiency

This metric measures the computing accomplished divided by the electrical energy consumed by IT equipment.

This goal was not met. The goal was better or equal computational efficiency compared to the Base Case. The Pilot Test (immersion cooling) had 809 MFLOPS/watt and the Base Case (direct liquid cooling) had 857 MFLOPS/watt.

Lower energy efficiency for the Pilot Test (immersion cooling) is likely caused by the higher CPU temperatures compared to the Base Case. The goal is not likely achievable with the high boiling temperature of Novec 649.

PO4: Low Concentrations of Novec 649 Vapors During Normal Operation

Novec 649 vapor concentrations were measured at the operator's breathing zone and under the floor every five minutes for 10 months. Exposure for 8-hour time weighted average (TWA) periods were evaluated. The TWA maximum for Novec 649 vapor is < 150 ppmV (parts per million by volume) per the 3M Safety Data Sheet. The highest 8-hour TWA value calculated was 48 ppmV. Therefore, the goal was met.

PO5: Low Concentrations of Novec 649 Vapors During Startup or Maintenance

The vapor concentration limit for short (less than 4 continuous hours) exposure periods is < 100,000 ppmV per the 3M Safety Data Sheet. The peak concentration measured during the demonstration was 200 ppmV. Therefore, the goal was met.

PO6: Reduction in Direct Greenhouse Gas Emissions

The carbon dioxide equivalent emissions (CO_2e) were calculated based on the electrical energy

savings from PO2.

The goal of a reduction compared to the Base Case was met. Simulations estimated a carbon dioxide equivalent (CO_2e) emission reduction of 19 percent, or 2,772 metric tons per year for a simulated data center designed for a maximum IT equipment load of 2 megawatts (MW).

PO7: Dielectric Liquid Loss

The immersion liquid Novec 649 is expensive and volatile compared to other cooling fluids (air and/or water) typically used for data centers. The metric for this performance objective was the cost of liquid lost divided by the cost of electrical energy consumed by the IT equipment.

This goal was not met. The cost of the lost liquid was 368 percent of the cost of the IT equipment energy consumed, compared to the goal of 1 percent. Because Novec 649 is a volatile liquid and its vapor is invisible, the locations of vapor or liquid leaks were not evident. There will be technical challenges containing volatile fluids. Experiments attempting to characterize and isolate the fluid loss mechanisms were not conducted.

PO8: System Economics

A simple payback period and optional financial net present value (NPV) analysis for a seven-year period were performed.

The payback period calculation assumed realistic design improvements to the demonstrated technology; most importantly, Novec liquid initial fill volume and the cost of the bath enclosure. The simple payback period was calculated to be 33 years, therefore neither the goal (< 4 years) nor the stretch goal (< 3 years) was met. The immersion cooling option had a 9.5 percent higher seven-year NPV than the Base Case.

The initial fill volume and bath cost were high because the IT equipment used in the demonstration was not specifically designed for two-phase immersion cooling. Before immersion cooling can be cost competitive with existing cooling methods there needs to be a substantial increase in the amount of IT equipment that can be contained in a given volume. This density increase may involve a complete rethinking of current HPC computing architecture.

PO9: Lower CPU Chip Temperatures

The goal of the central processing unit (CPU) temperature for the demonstrated technology was to be equal or lower than the Base Case temperature.

This goal was not met. The CPU temperatures averaged approximately 20°C higher when the computer was immersion-cooled compared to the Base Case. This higher temperature may have been due to a couple of contributing factors. The liquid temperature close to the CPU is 49C in

the immersion case (Novec 649 boils at 49C) and 20C in the Base Case (20C cooling water). The goal is not likely achievable with the high boiling temperature of Novec 649. The other contributing factor is that the phase change taking place on chip heat-transfer surfaces may also have deposited pollutants, which, in turn, would have limited the heat transfer.

PO10: Higher User Satisfaction, Low Number of Concerns

Personnel at the demonstration site reported on safety and operational concerns.

The goal of zero unresolved safety concerns was met, the goal of zero unresolved operational concerns was not met. There were thirteen (13) unresolved operational concerns—most importantly, IT equipment failures.

Other than the repeated electronic failures, overcoming the remaining operational concerns could also be a major technical challenge.

PO11: Improved IT Power Density

Equipment floor space power density (in kilowatts per square foot, kW/ft^2) was estimated for IT equipment cooled using the immersion technology as well as for the Base Case technology.

The goal of a higher power density with immersion cooling was not met. The demonstrated technology had a power density of just 22 percent of the Base Case. An important factor is that the baths are horizontal and are not able to use space for electronics much above three feet; whereas, conventional racks are vertical and are able to house electronics to a height of more than six feet. To achieve a comparable density to the Base Case would be a major technical challenge. It could involve a complete rethinking of current HPC computing architecture to significantly increase computational density in the bath

PO12: System Maintenance

The number of maintenance requests for the immersion-cooled computer equipment was compared to field data from installations of similar computer equipment conventionally cooled with air.

The goal for this performance objective was not met. The immersion-cooled equipment had a 6,643 percent higher service request rate compared to the Base Case. Repeated logic board and power supply failures were primarily responsible for the high number of service requests.

The cause of the power supply failures was determined and a subsequent fix was successfully applied. Considerable resources were assigned to find and correct the cause or causes of the logic-board failures. A large number of metallic filaments "tin whiskers" were observed on failed boards. Although the exact mechanism for creating these tin whiskers is unresolved, they likely

created shorts on the logic boards. Identifying the root cause(s) and a solution for the logic board failures could require considerable resources.

Conclusions and Recommendations

Two-phase immersion cooling using Novec 649 is not viable at this time. The primary obstacles that need to be overcome are IT equipment failures and costs. However, the demonstrated technology met the performance objectives for energy efficiency and greenhouse gas reduction. Before commercialization of this technology can occur, a root cause analysis of the failures should be completed, and the design changes proven.

1.0 INTRODUCTION

The U.S. Department of Defense's (DoD's) computational needs show continual growth, resulting in requirements for more data center space for both traditional business applications and high-performance computing (HPC). Electricity use for these data centers often dominates the electricity demand of the DoD sites where they operate. The DoD's Data Center Consolidation Plan to support the Federal Data Center Consolidation Initiative will aggressively consolidate assets, resulting in fewer but more energy-intensive facilities. Consolidation, growth in DoD high-performance computing, and increasingly energy-intensive computing systems drive the need to investigate alternative cooling systems. Traditional air cooling of electronic equipment has limitations with cooling high-power chips. The technology demonstrated in this project has the capacity to cool extreme heat loads very effectively without using precious water resources.

1.1 BACKGROUND

Data center electrical energy use for powering and cooling the DoD's electronic equipment has increased over recent decades, driven by the need for more processing capability. It is all but certain that the need for computational resources will continue on a steep upward trajectory. It is important to reduce the energy consumption and lower the carbon dioxide (CO_2) emissions by improving not only the efficiency of the electronic equipment but also that of the cooling infrastructure.

By immersing the IT equipment in a non-conductive (dielectric) liquid—3M Novec™ 649 Engineered Fluid (649 liquid)—the technology demonstrated reduces the energy needed to cool HPC electronics. This liquid provides cooling by changing phase (liquid-to-gas) at the surface of hot electronic equipment components. This particular liquid boils at 49°C, and the process of boiling has the capacity to remove very high heat loads.

The 649 liquid is working well in experimental setups at the Mayo Clinic (Polzer, pers. comm. 2015). There have been reports that the chemical was sensitive to liquid water; however, it may still be considered a promising technology. This project was initiated to establish its commercial applicability.

Appendix A lists the project Points of Contact.

1.2 OBJECTIVE OF THE DEMONSTRATION

The primary project objective was to demonstrate efficient cooling of high-heat density

electronics by the use of two-phase open-bath immersion (OBI) cooling. The demonstration was conducted over a considerable time period in order to identify potentially undesirable operational issues. This demonstration was on a larger scale than previous proof-of-concept demonstrations and was meant to demonstrate the viability of this technology at commercial scale.

Open-bath immersion cooling can efficiently cool high-density electronics in data centers without the need for compressor-based cooling. Since this system operates well using high-temperature coolant, dry coolers can be used for heat rejection to the atmosphere, thereby eliminating evaporative water use almost anywhere in the world.

In addition to performance objective evaluations related to energy efficiency, a number of other objectives were evaluated during the demonstration, including computer equipment floor space power density, electronic component temperatures, safety (chemical exposure), and the cost of dielectric liquid. In an attempt to identify short- to medium-term reliability issues, the demonstration was operated for approximately 10 months, running exercising software when production software loads were not applied.

Liquid immersion cooling, especially with phase change, is a paradigm shift in the way electronics are cooled. The demonstration was meant as an important step in introducing the technology to a broader audience through technology transfer to the DoD and other stakeholders. The U.S. Department of Energy's (DOE's) Federal Energy Management Program (FEMP) has designated Lawrence Berkeley National Laboratory (LBNL) as the "Center of Expertise for Energy Efficiency in Data Centers." The Center is able to widely disseminate the results of the demonstration to the DoD, the Federal sector in general, and industry at large.

1.3 REGULATORY DRIVERS

A number of regulatory drivers have spurred the need for this kind of technology:

Executive Order (EO) 13423 "Strengthening Federal Environmental, Energy, and Transportation Management"

Energy use in DoD data centers, if separately metered, is exempt from energy reduction goals, but not water reduction goals. The water reduction goal of 16 percent by the end of FY 2015 compared to FY 2007 will be challenging to meet. The demonstrated immersion cooling technology has been purported to eliminate water use.

Executive Order (EO) 13514 "Federal Leadership in Environmental, Energy, and Economic Performance"

The sustainability goal of achieving net zero energy use by FY 2030 (start of design in 2020 or later) requires aggressive energy efficiency strategies, and data centers are not exempted. In

addition, because the system will operate with elevated temperatures, there may be an opportunity to reuse the heat produced by the electronics. This technology may also help meet the water reduction goals of 20 percent reduction by FY 2020 compared to FY 2010 by eliminating all water use for evaporative cooling, as well as meeting the product and stewardship goal of improving water efficiency.

Executive Order (EO) 13693 "Planning for Federal Sustainability in the Next Decade"

The demonstrated technology may assist Federal data centers in maximizing energy efficiency and water use of "core" data centers. Executive Order section 3(a)(ii) instructs the head of each agency to improve data center energy efficiency at agency facilities by:

> (A) ensuring the agency chief information officer promotes data center energy optimization, efficiency, and performance;
>
> (B) installing and monitoring advanced energy meters in all data centers by fiscal year 2018; and
>
> (C) establishing a power usage effectiveness target of 1.2 to 1.4 for new data centers and less than 1.5 for existing data centers.

The demonstrated technology has the capability to meet requirement C with a significant margin.

Industry Guidelines

The demonstrated technology can utilize the liquid cooling thermal guidelines developed by ASHRAE Technical Committee 9.9. Mission Critical Facilities, Data Centers, Technology Spaces, and Electronic Equipment. These guidelines are in the ASHRAE Datacom book series, both in *Thermal Guidelines for Data Processing Environments* and *Liquid Cooling Guidelines for Datacom Equipment Centers.* Higher temperatures for liquid cooling as defined in the guidelines allow cooling with dry coolers in most climates, thereby eliminating water usage.

Energy Policy Act of 2005

The Energy Policy Act of 2005 requires that Federal buildings' energy performance exceed ASHRAE Standard 90.1 by 30 percent. Previously, data center facilities were excluded from this requirement; however, the exclusion has been removed in the current ASHRAE Standard. It may be extremely difficult to achieve a 30 percent energy saving without a disruptive technology such as liquid immersion cooling. In addition, immersion cooling may achieve energy reduction in the IT equipment (e.g., fan removal), as well as in the heat rejection path.

U.S. Navy Policy OPNAV 4100.5E

OPNAV Instruction 4100.5E spells out the Navy policy for Navy shore energy. This includes

technological innovation to enable commands to meet the Navy's land-based energy goals. It also requires commands to submit energy reduction plans annually.

2.0 TECHNOLOGY DESCRIPTION

2.1 TECHNOLOGY OVERVIEW

Technology Theory, Functionality, and Operation

Servers were immersed in modular baths containing a dielectric (not electrically conductive) liquid. This demonstration used 3M's fluoroketone (FK) Novec 649, chemical formula $CF_3CF_2C(O)CF(CF_3)_2$. This project used a semi-open immersion cooling technology. The term *semi-open* denotes a bath with a lid, which is open only when access is needed. Although the bath in this demonstration had a semi-open lid design (it was removed for IT equipment service), this report refers to it as *open-bath immersion* (OBI) cooling.

Electronic components are cooled by convection or when the Novec 649 liquid boils (changing phases from a liquid to a gas, which occurs at 49°C) near high-heat generating components. The gas, which is less dense than the liquid but denser than air, rises to the space above the liquid, where it comes into contact with a condenser integrated into the bath (Figure 2-1). The vapor is condensed back to a liquid by the condenser, which is cooled by a water loop connected to a source of cooling water. The condensate falls as droplets back into the liquid (Figure 2-1). Recirculation or return pumps are not needed for either phase (liquid or gas) for Novec 649 two-phase immersion cooling. The vapor generated in the boiling process forms a distinct layer above, which is a region of air and vapor called the *headspace.*

The heat output from the servers changes with the work load. This, in turn, causes the vapor level to change. The thermal control keeps the vapor level within desired limits by modulating the cooling water flow rate.

Immersed IT equipment can be removed for service by opening the lid and simply lifting the equipment out of the tank. When servers are removed slowly from the bath through the vapor, liquid on the equipment surfaces quickly evaporates and is captured by the condenser. Thus, the servers leave the bath essentially dry, causing minimal liquid loss due to normal maintenance.
The OBI system operates at atmospheric pressure, and electrical connections enter the bath from above, through a sealed conduit that terminates beneath the liquid level.

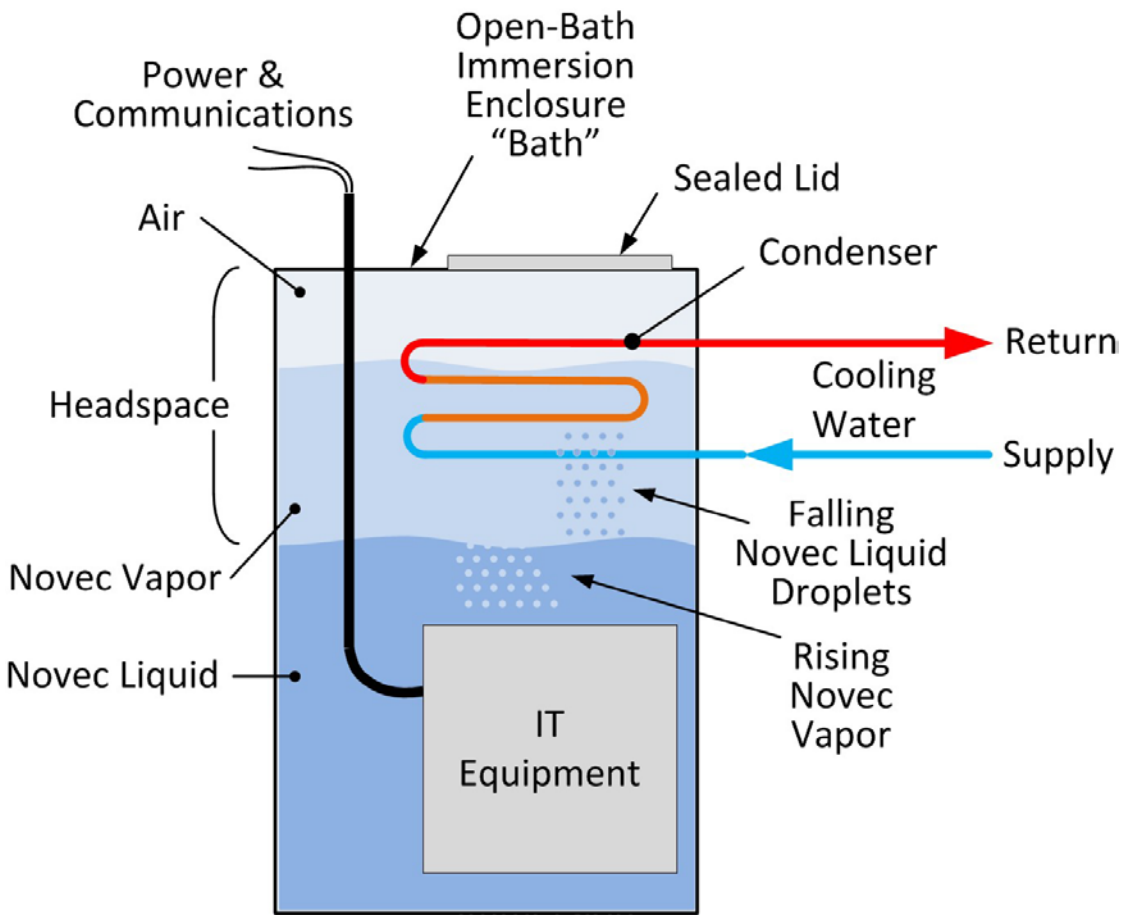

Figure 2-1: Open-Bath Immersion (OBI) Cooling Basics

Technology Overall Schematic

Cooling water flows through the condensing coil, which removes heat from the vapor. Since Novec 649 (Figure 2-1, "Novec Liquid") boils at 49°C, the temperature of the cooling water (Figure 2-1, "Cooling Water") can be significantly higher than that typically found in HPC data centers. The system studied may work with 40°C–45°C (104°F–113°F) cooling water compared with 7°C–20°C (45°F–68°F) for other cooling technologies. These higher temperatures (40°C–45°C [104°F–113°F]) can generally be produced without mechanical (compressor-based) refrigeration.

The heat removed by the cooling water is rejected to the outside atmosphere using a "dry cooler"—a water-to-air heat exchanger similar to an automobile radiator. The dry cooler has a fan that boosts the heat transfer when needed. Figure 2-2 shows the fan, pump, and valve layout used in the demonstration. The pump and fan require energy to move the cooling water and modulate the temperature of the cooling water supplied by the dry cooler.

Other cooling water infrastructure options are possible, e.g., using chilled water already available in the building or adding a dedicated cooling tower. The project team selected a dry cooler option to demonstrate that a low first- and operational-cost cooling option is feasible.

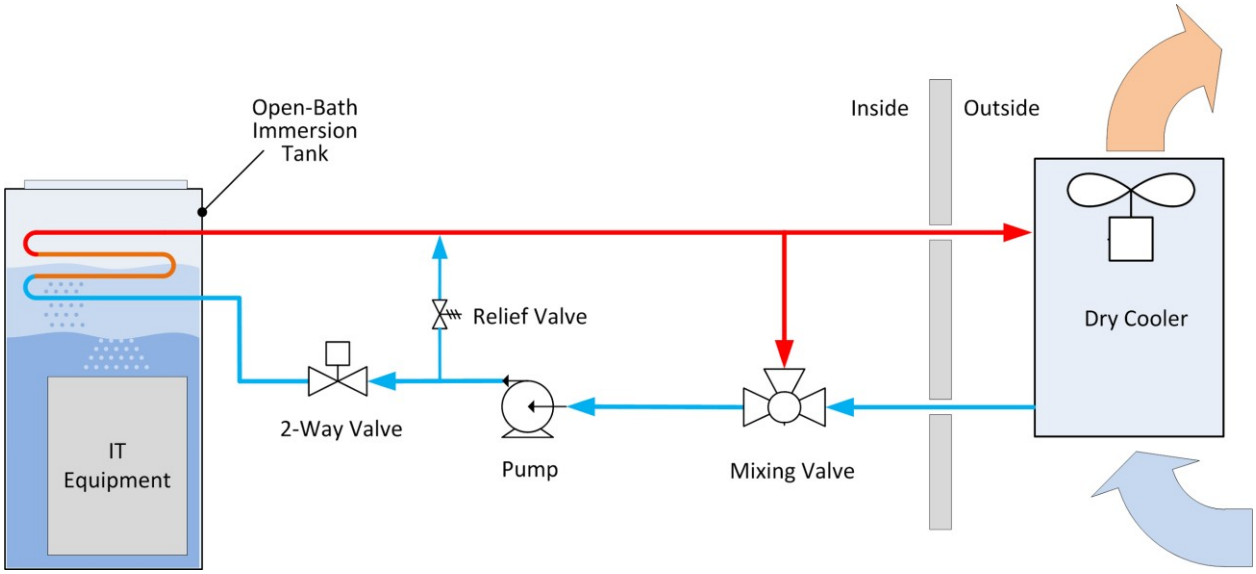

Figure 2-2: Demonstration Cooling System Schematic

2.2 TECHNOLOGY DEVELOPMENT

Improving the energy efficiency associated with cooling IT equipment as well as improving the density limitations of air-cooled IT equipment has been a focus in recent years. Air-cooled equipment has traditionally been cooled by using room-level air conditioning systems. Each piece of IT air-cooled equipment typically has its own fans that pull in cool room air at the front and exhausts hot air to the rear. This hot air is returned to the room air conditioning system to be cooled again often using cooling towers and chillers to reject the heat outside. As IT equipment heat density continues to increase, two issues are encountered: (1) Legacy data center air conditioning is not able to supply enough cool air, and (2) IT equipment that uses high-power CPU components face significant cooling design challenges if restricted to using only air for cooling.

Alternate cooling methods have been introduced in the last decade in an attempt to address the limitations of air-cooled IT equipment and find better efficiency. One approach is to enclose the IT equipment at the rack level. Rack-level cooling can provide efficiency gains as outlined in Demonstration of Rack-Mounted Computer Equipment Cooling Solutions (Coles 2014). Another more recent approach is to bring water directly to the chip, using a small cold plate (direct-cooling) which is not a new concept but is being popularized by solutions that can be adapted to

standard IT equipment. The demonstrated results of one company's direct-cooling solution that improved overall data center efficiency is presented in Direct Liquid Cooling for Electronic Equipment (Coles and Greenberg 2014). Another more recent method involves immersing the IT equipment in a liquid that does not change phase. This method is termed *single-phase immersion cooling.* At least two liquid types are currently being offered for this type of immersion cooling. Two such examples of companies offering single-phase cooling, each using a different liquid, are LiquidCool Solutions and Isotope (using Novec HFE liquid) and Green Revolution Cooling (using mineral oil).

In the quest for more-efficient and higher-performance heat transfer, two-phase immersion cooling technologies are being developed using, for example, Novec 649, a fluoroketone (FK) liquid, and Novec 7100, a hydrofluoroether (HFE) liquid. The liquid used in this demonstration was Novec 649, which is an FK liquid with a low global warming potential (GWP) of 1 (SDS 2015a).

Hydrofluoroether liquids generally have higher GWP ratings; for example, Novec HFE-7100 has a GWP rating of 320 according to its Safety Data Sheet (SDS) (SDS 2015b). They also are reported to create a dielectric environment that may pose limitations with the high-speed circuitry in the IT equipment used in this demonstration (Chan et al. 2010). Therefore, the Novec 649 was selected for its superior dielectric characteristics and low GWP.

A publically documented track record of using Novec liquids for two-phase immersion cooling of IT electronics is limited. However a number of companies and individuals have worked on developing two-phase cooling, and in some cases are offering cooling solutions using Novec FK and HFE liquids. The following examples are some applications of Novec Engineered Fluids for two-phase immersion cooling:

Mayo Clinic

The Special Purpose Processor Development Group (SPPDG) within the Mayo Clinic was introduced to 3M's immersion cooling thermal management approach via a presentation, The Merits of Open Bath Immersion Cooling of Datacom Equipment (Tuma 2010), at SEMI-THERM 2010.

The SPPDG completed experiments to characterize the optical and electrical signal integrity performance across a couple of different dielectric liquids; Novec 649 was included. The results were presented at IMAPS-ATW 2010 (Chan et al. 2010). The results concluded that an FK fluid (Novec 649) appears able to maintain electrical signal integrity exceeding 15 gigahertz (GHz) and HFE fluids may be unable to maintain electrical signal integrity above a few GHz.

The SPPDG assembled a small form factor demonstration test containing a Dell OptiPlex desktop computer) to investigate potential idiosyncrasies that might be associated with this (two-phase) thermal management solution. The test vehicle started running in the early-to-mid December 2010 time frame. The SPPDG did run into a few hurdles, related to water contamination and deposits of oil from cable materials, along the way. These hurdles were documented in *Design Considerations Relating to Non-Thermal Aspects of Passive 2-Phase Immersion Cooling* (Tuma 2011).

Note: Perfluoropropionic acid (PFPA) can form when Novec 649 comes into contact with water. Dioctyl phthalate (DOP) is used as a primary plasticizer in cables made from polyvinyl chloride (PVC). The PFPA (acid) and DOP ("goop") can concentrate in areas where Novec 649 boils, and are suspected of causing reliability issues.

The Dell computer at SPPDG has been exposed to PFPA and DOP, starting in December 2010. It has been exposed 24 hours per day, seven days a week, with a 100 percent CPU load for almost five years and is still running at the time of this report.

In addition, SPPDG tested the electrical properties of the liquid after two years of use and did not see a change in the electrical signaling performance characteristics.

In 2011 SPPDG built a large test tank to evaluate how the performance of this thermal management platform would scale. Experiments from this effort showed that the condenser coils performed as expected. The electric cartridge heaters that supplied the load in this experiment had been incorrectly sized for the application. This eventually caused a catastrophic arc failure to occur on one of the cartridge heaters. Arc events in liquid Novec 649 have the potential of forming perfluoroisobutylene (PFIB), which is a hazardous chemical. After the heating rod failure, the liquid was tested at 3M and came back negative for PFIB. The SPPDG followed up by testing the electrical properties of the liquid and found the dielectric environment properties of the liquid were unchanged as well (Polzer, pers. comm. 2015). The SPPDG presented the results from this effort (not including the heater cartridge failure) at the IMAPS Advanced Thermal Workshop 2012 (Polzer and Gilbert. 2012).

Bitcoin Mining Electronics Cooling Development

In January 2013, inventor/consultant Mark Miyoshi began development of a two-phase cooling system using Novec 649 to be used for cooling bitcoin mining hardware. After a short trial period, hardware power supply and logic-board failures occurred. Novec 7100 was substituted for Novec 649 in August 2014, and failures ceased (Miyoshi, personal communication 2015).

Allied Control

In November 2013 Allied Control, an engineering company specializing in two-phase immersion cooling, announced a 500 kW installation. Allied Controls claimed that the technology is universal and will work with any hardware, including CPU-based systems that use Intel processors (press release). The liquid used was Novec 7100, an HFE that boils at 61°C (Allied Control 2013). Alex Kampl from Allied Control explains that, from a cost perspective, two-phase immersion cooling requires a hardware density much higher than typical air-cooled hardware. Kampl explains the design features of their immersion technology that uses a Novec HFE (Kampl 2014).

Allied Control also offers two-phase cooling solutions using either Novec 7100 or Novec 649 (Allied Control 2015).

EXTOLL

A German company, EXTOLL, makes high-performance interconnection technology and offers an electronic equipment cooling cabinet called *GreenICE*. This is a two-phase cooling solution that uses Novec 649 (EXTOLL 2015).

Expected Applications

Industry has been researching and developing single-phase immersion liquid-cooled solutions for military applications for years. Dielectric (non-conducting) liquids have been used for cooling avionics in military applications for decades (e.g., Skybolt missiles in the 1960s) and have been proposed for cooling electronic equipment on the ground (LiquidCool Solutions using a 3M pumped single-phase liquid) at forward operating bases supporting combat forces.

A promising area of application for the demonstrated two-phase cooling technology could be high-density electronic equipment found in many data centers. In the current demonstration, the electronic equipment was of the type found in high-performance computing data centers.

2.3 ADVANTAGES AND LIMITATIONS OF THE TECHNOLOGY

Two key aspects must be considered when comparing the demonstrated technology to alternate existing cooling technologies: (1) their ability to provide high energy efficiency, and (2) their ability to cool high-heat density equipment. For example, free-air cooling (use of free cool outdoor air when conditions are favorable) is energy efficient but may not be able to provide the cooling required by some HPC equipment.

A number of alternative available cooling technologies should be considered, along with the two-phase immersion technology used in this demonstration.

Mineral Oil Immersion Cooling

In the past few years, an alternative immersion technology using mineral oil has been

successfully demonstrated and recently deployed by Green Revolution Cooling in commercial data centers. This alternative uses what is termed a *white mineral oil* rather than the 3M Novec 649 Engineered Fluid. One significant advantage of the mineral oil is its low cost compared to the 3M fluid. However, a limitation with mineral oil cooling is the maximum heat density it can support, which is considerably lower compared to Novec 649. Intel processor-based data center equipment is typically designed to be air cooled, and is not of the density required to take full advantage of the Novec 649 two-phase cooling capability. Therefore, at the time of this report, the lower-heat density capability of mineral oil immersion cooling may not be significant.

Since both immersion mineral oil and Novec 649 cooling designs restrict service to vertical removal of IT equipment, the floor-space density of immersion-cooled IT equipment may be limited compared to typical data center air-cooled equipment housed in tall racks. This floor-space density limitation may pose a significant drawback associated with replacing air-cooled IT equipment with immersion-cooled equipment. There are reports of bitcoin mining companies vertically stacking two-phase immersion baths to improve the floor space density, but this approach is likely not practical or possible in legacy data centers.

Free-Air Cooling

As mentioned above, another alternative cooling technology has been named *free-air cooling*. Facebook increased the awareness of this cooling method by publicizing the design and efficiency of their Prineville, Oregon, data center. A free-air cooled data center introduces air directly from the outside and uses this air to cool the IT equipment, thus avoiding the need to use cooling towers and chillers to condition the data center. Free-air cooled data centers need to be located in areas with suitable temperature and humidity conditions. Disadvantages of free-air cooling include control issues during rapid weather changes and risks of contamination from wildfires or dust storms. Also, free-air cooled data centers may be viewed as more vulnerable to direct physical attacks (security issues). The IT equipment specifically designed to take advantage of free-air cooling may actually be less expensive relative to popular commercial servers. Information regarding the design of IT equipment optimized for free-air cooling is available for free via the Open-Compute Project founded by Facebook. Free-air cooling is not free from a cost perspective. Fan systems are needed to help move air through the data center, and humidity control systems may be needed.

Hybrid Cooling

Hybrid cooling is a combination of direct cooling (water to cold plates on each processor) and air cooling. The air cooling part gathers heat not captured by the direct cooling. Hybrid cooling is usually enclosed in a custom cabinet that minimizes the cooling load on the data center room air conditioning system by capturing almost all heat and transferring the heat to the building water loop. As mentioned in Section 5.1, the IT equipment for the Base Case was cooled by a commercially available Silicon Graphics International Corp. (SGI) hybrid cooling system.

Hybrid cooling systems have an advantage over air cooled systems since much of the heat is transferred at high temperatures to the building cooling water loop, and therefore the relatively inefficient room air conditioning requirements are lower. Hybrid cooling can also take the less-integrated form of modifying existing air-cooled IT equipment to include cold plates usually cooled by water attached to each processor. The servers are modified, at an extra cost, and placed in a standard type data center server rack that has been modified to provide the cooling water tubing needed for each server. The additional hardware and systems needed as part of the direct cooling system is generally thought as an additional cost. The advantage of hybrid cooling is the ability to cool high heat density IT equipment without imposing a significant additional load on the data center room air conditioning system, which can be prohibitively costly to modify.

Enclosed-Rack Air Cooling

Enclosed-rack air cooling takes the form of housing air-cooled IT equipment in a single or sometimes multi-rack arrangement. Fans that are part of the rack enclosure move hot air from the back of the servers through an air-to-water heat exchanger and then bring the cooled air back to the server air inlet area. Enclosed-rack air cooling may require additional floor space.

Two-Phase 3M Novec 649 Immersion Cooling

Two-phase immersion cooling should have distinct energy efficiency and local heat density advantages compared to most other non-immersion cooling methods. Novec 649, used in this demonstration, boils and therefore condenses at 49°C. The water needed to condense the vapor can therefore be supplied all year in many climates using, for example, a dry cooler rather than the cooling tower and chiller found at many data centers. Two-phase immersion cooling has proven to cool very dense heat loads; however, the current configuration of commercial IT equipment is not designed to take full advantage of the high-heat density capability. Other advantages include reduced noise inside the data center and the potential for low cooling infrastructure costs.

Two-phase immersion liquids are expensive. Novec 649 is $75/liter ($284/U.S. gallon). Initially filling a two-phase immersion bath will cost a considerable amount. The cost to fill the bath for this demonstration was approximately $44,625. Immersion cooling baths are somewhat limited in terms of floor-space density because they are constructed in a horizontal orientation compared to the usual vertical data center rack.

The construction of the bath and attached support systems (including filtering, spill containment, venting controls, and lid sealing devices) tend to raise the bath capital cost for a given amount of IT equipment compared to the simple and inexpensive data center rack. The additional cost to contain the IT equipment in the data center may be offset by a low capital cost of, for example, cooling towers and chillers.

3.0 PERFORMANCE OBJECTIVES

3.1 PERFORMANCE OBJECTIVE RESULTS

Table 3.1 lists the performance objective results by name and reference number in the Demonstration Plan v 1.6, dated January 28, 2013, for this ESTCP project (EW-201347).

Table 3-1: Performance Objective Results

Performance Objective	Metric	Data Requirements	Success Criteria	Results
Quantitative Performance Objectives				
1: Improved Cooling Energy Efficiency	pPUE = (IT energy + cooling systems support energy) ÷ IT energy	climate and data center assumptions, simulation results	50% lower than the Base Case	Goal: Met 73% lower than the Base Case
2: Reduced Overall Data Center Site Energy Consumption	yearly energy consumption (kilowatts [kWh]/year)	climate and data center assumptions, simulation results	Goal: 15% lower than the Base Case Stretch Goal: 20% lower than the Base Case	Goal: Met 19% lower than the Base Case Stretch Goal: Not met
3: Improved Computational Energy Efficiency	compute rate ÷ IT power	compute performance, IT power consumption	Goal: better or equal to the Base Case Stretch Goal: 10% improvement	Goal and Stretch Goal: Not met 5.6% less than the Base Case
4: Low Concentration of Novec 649 Vapors During Normal Operation	8-hour time-weighted average (TWA) of Novec 649 vapor measurements	vapor concentration level measurements	Goal: zero periods above 150 ppmV Stretch Goal: zero periods above 75 ppmV	Goal and Stretch Goal: Met maximum observed TWA concentration was 48 ppmV
5: Low Concentration of Novec 649 Vapors During Startup or Maintenance	number of events with Novec 649 vapor levels above no observed adverse effect limit (NOAEL) of 100,000 ppmV	vapor concentration level measurements	zero periods above 100,000 ppmV	Goal: Met highest observed concentration = 200 ppmV

Table 3-1: Performance Objective Results (continued)

Performance Objective	Metric	Data Requirements	Success Criteria	Results
6: Reduction in Direct Greenhouse Gas Emissions	Carbon dioxide equivalent (CO_2e) (metric tons)	Performance Objective 1 and 2 simulation results	less than Base Case	Goal: Met 19% Reduction
7: Dielectric Liquid Loss	cost($) liquid loss ÷ cost($) IT energy	energy used, liquid lost	Goal: 1% Stretch Goal: 0.1%	Goal: Not met Liquid Loss 360% Stretch Goal: Not met
8: System Economics	savings estimated from National Institute of Standards and Technology (NIST) building life cycle cost (BLCC) analysis	simulated energy use, estimated and observed equipment and liquid costs	Goal: 4-year payback Stretch Goal: 3-year payback	Goal and Stretch Goal: Not met, payback 33 years Net present value analysis indicates immersion cooling option is not recommended
9: Lower CPU Chip Temperatures	compare temperatures Base Case vs. Immersion-Cooled Case	CPU chip temperature measurements	at or below Base Case	Goal: Not met, CPU temperatures were 20°C higher than Base Case
Qualitative Performance Objectives				
10: High User Satisfaction, Low Number of Concerns	number of safety concerns; number of unresolved safety concerns; number of operational concerns; number of unresolved operational concerns	demonstration staff provides thoughts on safety and operational concerns	Goal: zero unresolved safety concerns Stretch Goal: zero unresolved operational concerns	Goal: Met, zero unresolved safety concerns Stretch Goal: Not met, 13 unresolved operational concerns
11: Improved IT Power Density	Density: IT (kW) / floor space (ft^2)	high density layout using Base Case equipment, layout using demonstration equipment	higher than the Base Case configured as a typical HPC installation	Goal: Not met Immersion Case 22% of the Base Case
12: System Maintenance	number of maintenance requests for immersed IT compared to traditionally cooled SGI equipment	maintenance request history for immersed equipment, typical maintenance history	immersed equipment has less than or equal maintenance requests, Stretch Goal: 20% less	Goal: Not met 6,643% more than typical

3.2 PERFORMANCE OBJECTIVE METRICS

The origin of each performance objective and its relevance to the demonstration are described below. Each performance objective has a metric, and all but three have two predetermined thresholds for success: goal and stretch goal. The metric definitions and success thresholds for each performance objective are discussed, and the results for each performance objective are briefly repeated.

PO 1: Improved Cooling Energy Efficiency

Improved data center cooling energy efficiency is the key advantage of the demonstrated technology. The energy needed to reject heat from the IT equipment (cooling energy) is typically significant, and in some situations equal to or more than the energy used by the IT equipment. The industry uses the partial power usage effectiveness (pPUE) metric ratified by The Green Grid, and this metric is used here.

Two quantities are required to calculate cooling pPUE:

1. The energy consumed (kWh) by equipment providing cooling for the data center
2. The energy consumed (kWh) by the IT equipment

The data used to calculate this metric was from Romonet model energy simulations. Romonet is a UK software company specializing in financial and energy modeling of data centers. See Section 6.1 for more information.

The metric is calculated as follows:

$$\text{pPUE} = (\text{Quantity 1} + \text{Quantity 2}) / \text{Quantity 2} \qquad \text{(Eq. 3-1)}$$

Cooling technologies available in the last 5 to 10 years have promised to reduce cooling energy use inside data centers significantly. The 50 percent reduction goal (of the cooling part—that is, pPUE-1) was estimated to be achievable considering that the demonstrated technology does not require compressor-based cooling that was assumed to be found at a legacy DoD data center. The success criteria (< 50 percent) was met with a reduction of 72 percent.

PO 2: Reduced Overall Data Center Site Energy Consumption

Improved overall data center energy efficiency is the key advantage of the demonstrated technology. While the cooling energy may be reduced as described above, understanding the net overall energy savings for the whole data center is the final measure of savings. The industry uses the PUE metric ratified by The Green Grid, and this metric is used here.

Two pieces of data required:

1. The energy consumed (kWh) by the whole data center

2. The energy consumed (kWh) by the IT equipment

The data used to calculate PUE was generated by Romonet simulation models. See Section 6 for more information.

The metric value is calculated as follows.

$$PUE = (Quantity\ 1 + Quantity\ 2) / Quantity\ 2 \qquad \text{(Eq. 3-2)}$$

The 15 percent reduction goal (of the infrastructure part, that is, PUE-1) was thought to be easily achievable considering the demonstrated technology should provide a significant cooling energy reduction. The success criteria (> 15 percent) was met with a reduction of 19 percent.

PO 3: Improved Computational Energy Efficiency

This performance objective was evaluated to determine whether the CPU performance was affected, while the IT equipment was immersion cooled.

Two pieces of information are required:

1. Average computing performance MFLOPS
2. Average power consumed (kW) during the performance test period

The metric is calculated as follows.

$$Compute\ Efficiency = Quantity\ 1 / Quantity\ 2 \qquad \text{(Eq. 3-3)}$$

If immersion cooling had better or equal compute efficiency compared to the Base Case, the goal would be met. The Pilot Case (immersion cooling) was 5.6 percent worse than the Base Case; therefore, neither the goal nor the stretch goal were met.

PO 4: Low Concentration of Novec 649 Vapors During Normal Operation

This performance objective was evaluated as a safety precaution. There are periods when the lid needs to be opened exposing the operator to 649 vapors. The long-term exposure guidelines for Novec 649 for humans is listed in the SDS (SDS 2015a). The goal was zero periods above 150 ppmV, calculated for an 8-hour time-weighted average (TWA), and the stretch goal was 75 ppmV.

Vapor concentration measurements were recorded every five minutes and the 8-hour TWA (indicated as “8-Hour Rolling Average PPM”) values were calculated and graphed (Figure 6.4-2). The maximum 8-hour TWA concentration was 48 ppmV, and therefore both the goal and the stretch goal for this performance objective were met.

PO 5: Low Concentration of Novec 649 Vapors During Startup or Maintenance

This performance objective was also evaluated as a safety precaution. People may be exposed to high concentrations during the initial filling of the bath. The short-term exposure guidelines for Novec 649 for humans is listed in the SDS (SDS 2015a). Recording zero measurements above 100,000 ppmV was set as the goal (there was no stretch goal).

Vapor concentration measurements were recorded every five minutes. The maximum measured value during the vapor level monitoring period at the breathing zone was 200 ppmV; therefore, the goal for this performance objective was met.

PO 6: Reduction in Direct Greenhouse Gas Emissions

The primary reason for investigating the demonstrated two-phase immersion cooling technology was to establish the energy savings, and thereby estimate the potential for reducing greenhouse gas emissions.

Lower CO_2e emissions for the Immersion Cooling Case compared to the Base Case was the goal for this performance objective. In retrospect, this goal should have been set at the same percent reductions (> 15 percent) at that for Performance Objective 2.

Evaluating this metric is straightforward:

1. Determine the overall data center electrical energy consumed for the Base Case and the immersion-cooled case.
2. Use the U.S. Environmental Protection Agency (EPA) conversion calculator to find the CO_2e emission rate per year in metric tons for each of the two cases and calculate the percent reductions.

The goal was met, with the calculated CO_2e reduction of 19 percent compared to the Base Case.

PO 7: Dielectric Liquid Loss

The cost of 3M Novec 649 is considerable in the amounts needed to fill the two-phase immersion bath enclosure. The bath used in this demonstration required an initial fill of 595 liters valued at $44,625 at $75/liter, which was the price at the time of this report. Because the open-bath enclosure is not sealed 100 percent of the time to allow for maintenance procedures there was a concern that some Novec 649 may be lost through the venting system or escape into the room. While a high cost of initially filling the bath is expected, potential additional costs from liquid loss were investigated by evaluating this performance objective.

To put the cost of the liquid loss in perspective, the metric related the cost of the liquid to the cost of IT equipment energy use. The metric was defined as a ratio: the cost of the liquid lost

divided by the cost of the IT equipment energy use. The goal and stretch goal for this PO were ratios of 1 percent and 0.1 percent, respectively. In retrospect, these goals were too optimistic, considering that the bath lid is removed during IT equipment service.

The liquid lost during the demonstration (86.95 liters) was estimated by adding two quantities:

1. Liquid volume added during the evaluation period. This quantity (63.85 liters) was determined by the number of bottles emptied into the bath after the initial fill.
2. Liquid volume change required to bring the liquid level at the end of the evaluation period to that found at the beginning of the period. This quantity (23.10 liters) was determined by comparing the liquid levels at the end and beginning of the liquid loss evaluation period and calculating the volume needed to make the volumes equal.

The energy used by the IT equipment was obtained from the electrical meter that measured the energy used (kWh) by the IT equipment. The NRL reported that the cost of electricity was $0.09 per kWh. The cost for energy used was easily calculated by multiplying the energy by the specific energy cost.

The goal and stretch goal were not met. The cost of the lost liquid ($6,525) was 368 percent more than the cost of the electrical energy used by the IT equipment.

PO 8: System Economics

The system economics were evaluated to determine if the technology was cost competitive with other options. Evaluations used a simple payback method. In addition, the seven-year net present value (NPV) was calculated using the National Institute of Standards and Technology (NIST) building life cycle cost (BLCC) calculator. Both evaluation methods compared the Base Case and the Immersion Cooling Case retrofitted into an existing low-efficiency data center. The Immersion Cooling Case simulation assumed the addition of a cooling tower to cool the immersion-cooled IT equipment.

Three key yearly costs, used in both evaluations (payback period and NPV), were initial capital, energy, and liquid loss for the Immersion Case. The economic analysis assumed the IT equipment was consuming an average of 909 kW.

Initial Capital

IT Equipment

The initial capital costs included the amount paid for the IT equipment used in the demonstration.

Cooling Systems

The cooling systems costs included the cooling-related equipment that is required as part

of each case (Base Case and Immersion Case). The Base Case hybrid cooling system requires SGI Cooling Racks and Cooling Distribution Units (CDUs) (see Figure 6.11-1, in Section 6). The Immersion Case requires the bath enclosure and support systems.

Novec 649 Initial Fill

The liquid needed to initially fill the bath was determined by counting the number of empty large barrels at NRL. The cost of 3M Novec 649 was considerable. The volume needed to fill the two-phase immersion bath enclosure was 595 liters. The total value of the liquid was $44,625 at $75/liter, which was the price at the time of this report.

Energy

The yearly energy cost was determined by using the results from Performance Objective 2 and an electrical energy cost of $0.09/kWh.

Liquid Loss

The liquid lost during the demonstration was estimated using two quantities:

1. Liquid volume lost during the loss evaluation period
2. Liquid volume change required to bring the liquid level found at the end of the loss evaluation period to that found at the beginning of the period

The amount of liquid lost during the liquid loss evaluation period was obtained by counting the number of empty "make-up" barrels at the end of the period.

The amount of liquid needed to equalize the liquid level at the end of the period to the beginning of the period was estimated by comparing the level readings. The volume of liquid was calculated by subtracting the beginning reading from the end reading. More details are provided in Section 6.8.

The three components discussed above were used to calculate the simple payback period of 33 years. Therefore neither the goal (< 4 years) nor the stretch goal (< 3 years) were met.

PO 9: Lower CPU Chip Temperatures

Elevated CPU chip temperatures have been related to reduced reliability and higher energy consumption. Therefore, a primary concern when investigating an IT equipment cooling technology is the effect it may have on the operating temperatures of electronic components, specifically the CPU. Exactly how higher temperatures affect reliability and energy consumption changes with each generation of CPU components. The concern is founded on the assumed, but not proven, phenomena that an increase in CPU temperatures will reduce the reliability and increase the energy consumption of the CPU to an extent that would affect business decisions.

Using specific software, the Intel Xeon E5-2690 CPU used in this demonstration is able to report

the internal temperature. During the Base Case and Pilot (also immersion-cooled) tests the temperatures for the 144 CPUs were recorded. Since the CPU temperatures were not successfully measured for the Immersion-Cooled Case, the data for the Pilot Test served as a valid surrogate. The mean values for the Base Case and Pilot Tests were compared to determine if the goal for this performance objective was met. The goal would be met if the immersion-cooled CPU temperature was equal to or lower than the Base Case. The mean value for the immersion-cooled equipment was 20°C higher than for the Base Case, therefore the goal was not met.

PO 10: Higher User Satisfaction, Low Number of Concerns

The technical specifications of a data center technology are very important, and provide objective information for potential buyers. However, how the user must interact with the new technology day to day is also an important consideration. For example, if additional maintenance activities are associated with safety and operational concerns, the potential buyer may reconsider a purchase.

This performance objective was used to find out whether the user had any safety or operational concerns that were not uncovered while the technical specifications were being originally investigated, and whether those concerns were resolved. The user provided responses on four subjects:

- Safety concerns
- Safety concerns that were not resolved
- Operational concerns
- Operational concerns that were not resolved

The goal was zero unresolved safety concerns. The goal was met. The stretch goal would be met if the goal was met and there were zero unresolved operational concerns. There were 13 operational concerns that were not resolved. Therefore, the stretch goal was not met.

PO 11: Improved IT Power Density

Investigating the floor-space density is a key consideration when a data center cooling technology is being considered. Data center operators need to know the current and future floor space capabilities for a technology being considered. For this performance objective, we define *density* as the number of processor sockets per square foot of data center floor space. Processor sockets are connectors on motherboards that hold the CPU components and provide the connections from the CPU component to the motherboard circuits. The compute capability of an HPC computer cluster is almost entirely driven by the number and model of the connected CPU components.

This performance objective was evaluated by comparing the floor space requirements from the most dense SGI ICE X M-Rack (the same model as the Base Case) layout defined by SGI to a

layout using the dimensions of the demonstrated immersion bath. Additional details are provided in Section 6.11.

The layout for the Immersion Case needed to be more dense than the currently offered density in order to meet the goal. However, the density of the Immersion Case was only 22 percent of that of the existing SGI-endorsed technology used for the Base Case. The goal was not met.

There are a number of reasons the density for the Immersion Case is lower than the layout endorsed by SGI using the existing cooling technology. One reason is that the bath's orientation is horizontal compared to the more floor space-efficient vertical orientation of the typical 6.5 ft. (2 meter)-tall rack used for the SGI-endorsed layout. Another reason is that the demonstrated immersion-cooled configuration was cooling only one-half of an M-Rack, compared to the SGI-endorsed layout, which uses a full M-Rack for each IT module.

PO 12: System Maintenance

Decreased reliability and increased maintenance, either for the IT equipment or infrastructure systems, are primary concerns to research before adopting any new data center technology.
The project team compared the number of maintenance requests for IT equipment during the demonstration to the average number of requests for the same model IT equipment already sold and in operation during the past year.

The goal and stretch goal were: equal to or better than the typical maintenance request rate and 20 percent lower, respectively. The number of maintenance requests during the demonstration were 62 for 7 months versus a typical 1.6 for the previous year. This is an increase of 6,643 percent ((62/7)*12)/1.6 = 66.43). The goal and stretch goal were not met.

The large number of IT equipment maintenance requests were caused by the large number of electronic failures. More information about these failures are included in Section 8. The support systems connected directly with the bath (such as the liquid conditioning pump, vent controls, and lid sealing pump) performed without failures. The only negative maintenance issue with the bath was related to the glass lid, which cracked twice and was replaced.

4.0 FACILITY/SITE DESCRIPTION

Three tests were performed as part of this ESTCP project. First a Base Case test was completed to establish baseline data for the thermal and computing performance characteristics provided by a readily available cooling system using an off-the-shelf HPC computer by SGI. The Base Case test was conducted in a prototype assembly area inside a SGI manufacturing facility located in Chippewa Falls, Wisconsin.

Second, a Pilot Test was performed in a different SGI building, also located in Chippewa Falls. This test used the same IT hardware as the Base Case test but utilized OBI immersion cooling. The Pilot Test was the first time this electronic equipment had been cooled by the OBI cooling. The test was performed at SGI in case unexpected startup or other issues arose with the IT equipment. A high computing load test was also performed during the Pilot Test.

Third, the Immersion Case testing took place in a U.S. Naval Research Laboratory (NRL) data center in Washington, D.C.

The Base Case test was performed using a single SGI ICE X "M-Rack," with the lower half populated with two individual rack units (IRUs) (Figure 4-1). A cooling distribution unit supplies water that directly cools the 144 processors located within the two IRUs. The remaining heat (10–30 percent) is removed by air cooling provided by a cooling rack (Figure 4-1) that is placed between two M-Racks. This hybrid cooling system, consisting of direct water and air cooling, is designed to be *room neutral*, which means that nearly all the heat from the IT equipment is captured locally (at the rack level) and very little heat needs to be cooled by the room air conditioning system. Therefore, capturing detailed room air conditioning data was not considered an important factor for performing a valid Base Case test.

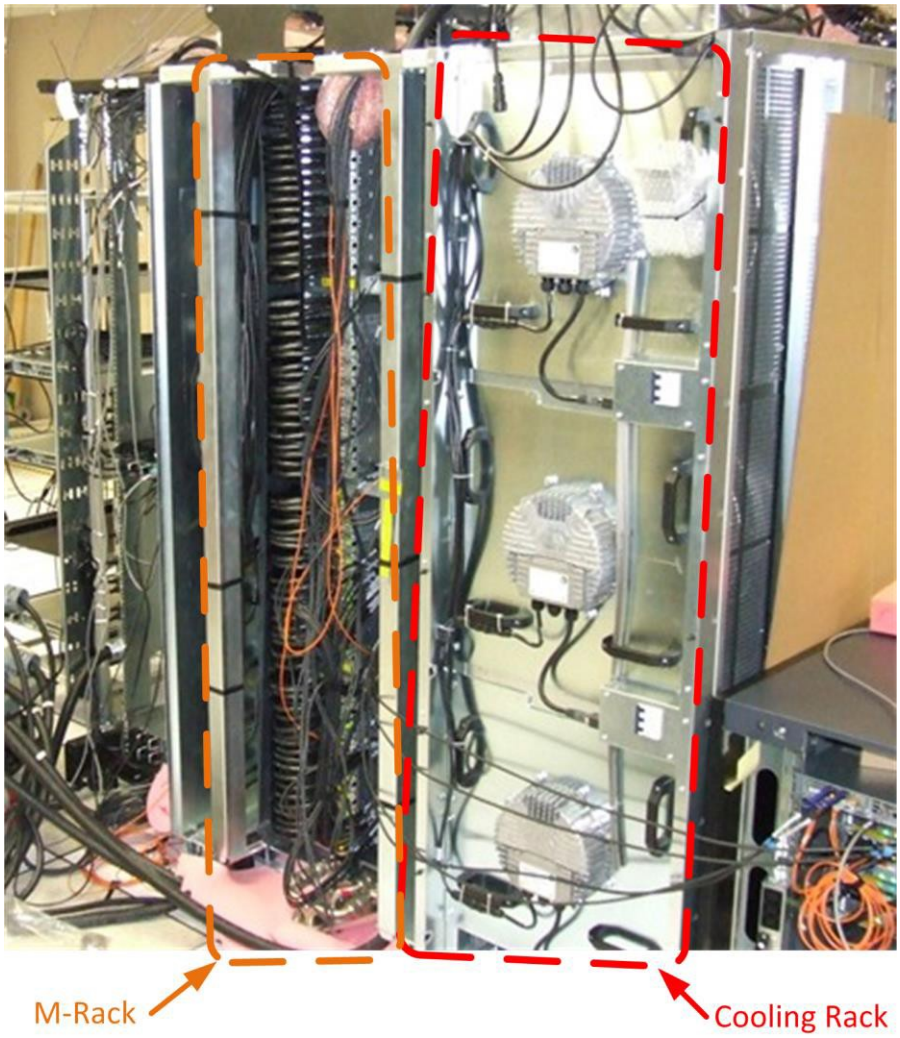

Figure 4-1: The Base Case Test Setup

The Pilot Test was set up in a basement room (Figure 4-2) with limited air conditioning capability. This test was also assumed to be room neutral because it was assumed that a high percentage of the IT equipment heat load would be removed by the OBI cooling. Temperature variation in the room was not noticeable, indicating that the existing limited air conditioning was sufficient.

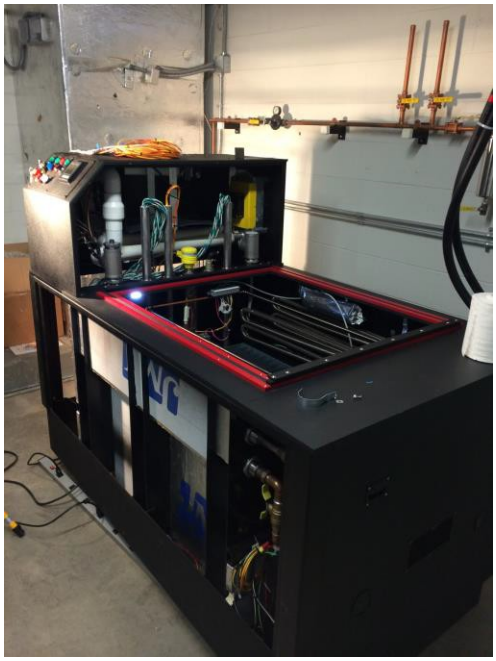

Figure 4-2: Pilot Test Setup at SGI

The demonstration test was conducted in a data center room at the NRL in Washington, D.C.

4.1 FACILITY/SITE LOCATION AND OPERATIONS

For the demonstration test, the OBI bath was located inside a data center room at NRL. A dry-cooler type of heat exchanger located immediately outside the building provided the heat rejection needed for the immersion bath (Figure 4-3).

This data center facility is operated around the clock: 24 hours per day, 7 days per week. Except for this demonstration, the data center was operated normally. On a typical work day, a small number of people occupy the data center to monitor, configure, or service the IT equipment.

Figure 4-3: Dry Cooler Outside of NRL Data Center

Data center room is approximately 3,000 square feet and houses electronic equipment that uses approximately 1,750,000 kWh/year. This existing air-cooled equipment, which was not used for the demonstration test, is cooled by a traditional underfloor air plenum with computer room air conditioners (CRACs). The temperature in the center, at the air inlets to the electronic equipment, is controlled and typically ranges from 69°F (21°C) to 73°F (23°C).

Figure 4-4 shows the bath installed at NRL with the IT equipment powered on. A data center designed exclusively for immersion cooling would probably have airflow velocities near the bath much lower than is typical with a raised-floor cooled data center. Therefore, a plastic curtain containment system was installed (visible in Figure 4-5) to reduce air currents that might increase Novec 649 vapor loss when the tank lid was open during service or startup operations. The cooling water supply and return for the condenser coils inside the bath were provided from overhead via two 2-inch-diameter copper pipes (Figure 4-5).

Figure 4-4: Bath Located in the NRL Data Center Room

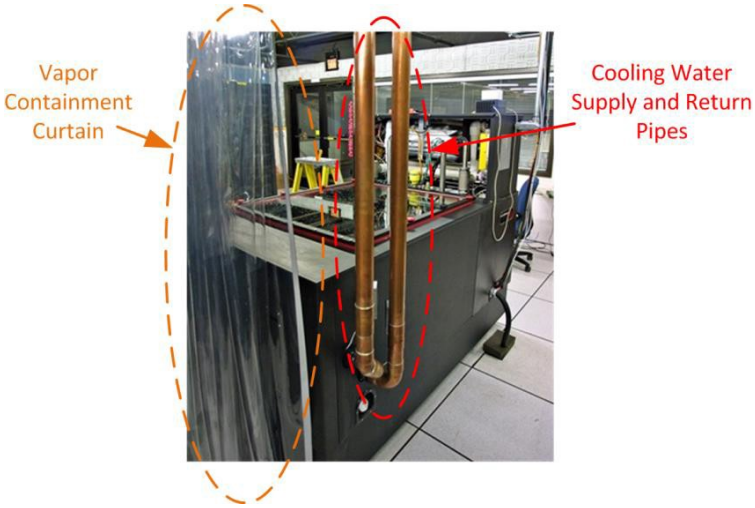

Figure 4-5: NRL Demonstration Setup

4.2 FACILITY/SITE CONDITIONS

The site was selected primarily by NRL's desire to be part of this demonstration. The Washington, D.C., climate can provide conditions that challenge the energy efficiency of conventional cooling systems. For example, there are many days during the summer when the dry-bulb temperature is high, with coincident high relative humidity. Data center sites that have a cooling tower and chiller cooling infrastructure need to be sized to provide enough cooling during these worst-case conditions. Therefore, the Washington, D.C., climate is a good candidate for exploring the energy savings that might be provided by a technology that reports to offer significant cooling system energy savings.

5.0 TEST DESIGN

This section describes the demonstration test design used to obtain data to support the evaluation of the performance objectives. The general approach was to compare the energy efficiency performance of the immersion cooling technology to commercial technology available from SGI. In addition, a number of other parameters not directly connected to energy efficiency were monitored in the event that those parameters were affected by the immersion cooling technology.

5.1 CONCEPTUAL TEST DESIGN

The measurements for evaluating the performance objectives were gathered during three distinct tests. The Base Case and the Pilot Test were performed at SGI in Wisconsin. The Immersion Case test was located in a data center at the Naval Research Laboratory (NRL) in Washington, D.C. All three test phases used the same IT equipment from SGI. The Base Case used commercial cooling technology from SGI, whereas the Pilot Test and the Immersion Case used the demonstrated immersion cooling (OBI).

Base Case Test

Base Case testing was performed inside a SGI manufacturing building in Chippewa Falls, Wisconsin. This test was used to gather thermal and computational performance data using the water-cooled technology commercially available from SGI. The IT equipment tested was half of an SGI ICE X M-Rack (Figure 5-1). This half rack consisted of 36 SGI ICE X blades containing two node boards each. Each node board contained two CPUs and four memory dual in-line memory modules (DIMMs) per CPU. The total number of key components therefore consisted of 144 CPUs and 576 memory DIMMs.

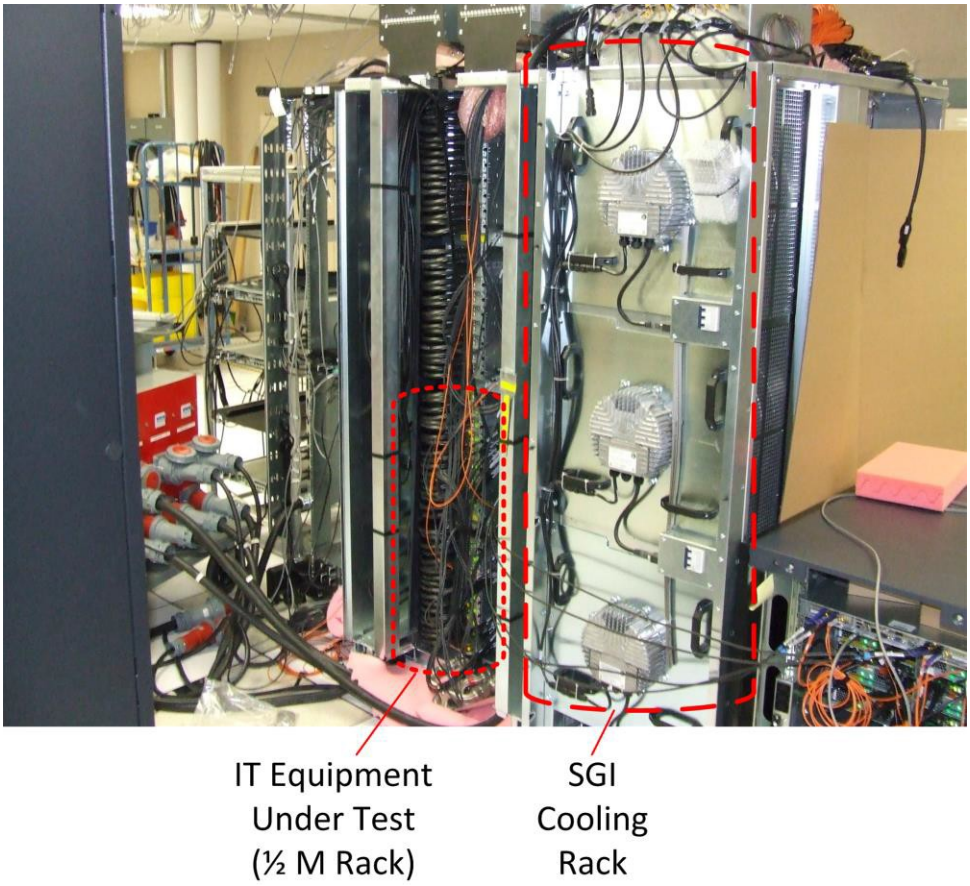

Figure 5-1: Base Case Test Configuration

The Base Case test consisted of gathering data during a period of approximately one hour during constant thermal and controlled computational load conditions. The test was controlled by providing a constant IT equipment load during a period where the supplied building-cooling water temperature was nearly constant. The computational performance results were recorded using common high-performance computing (HPC) benchmark software called LINPACK. The electrical power needed for the IT equipment and associated cooling systems were periodically recorded. The test results were used to establish the performance objective baselines.

Pilot Test

The Pilot Test was performed in the basement (Figure 5-2) of a SGI engineering building also located in Chippewa Falls, Wisconsin. The test was performed at SGI in the event start-up issues required SGI technical expertise. The Pilot Test used the same half rack of SGI ICE X super-computer hardware employed in the Base Case test but was immersed and cooled using 3M Novec 649 in a bath enclosure constructed by 3M. This bath would later be moved to NRL to perform the Immersion Case test.

Figure 5-2: Pilot Test - IT Running at Full Power.

Note: Boiling Novec 649 appears white. Novec 649 liquid and vapor are transparent.

Immersion Case Test

In September 2014**,** the bath and IT equipment was moved from the Pilot Test location to the Immersion Case test location and installed (Figure 5-3) in the data center space at the NRL in Washington, D.C. The tests were performed from October 2014 to August 2015. The cooling system was designed to provide different supply-water temperatures (Figure 5-4, "Temperature Control"), in order to obtain data needed to simulate long-term performance in different climates. The cooling system also had a selectable pressure difference across the bath condenser coil, as might be encountered in a data center containing multiple immersion cooling baths. In such a configuration the flow rate could be adjusted for each bath using a two-way valve.

Figure 5-3: Immersion Case Test Installation (Demonstration)

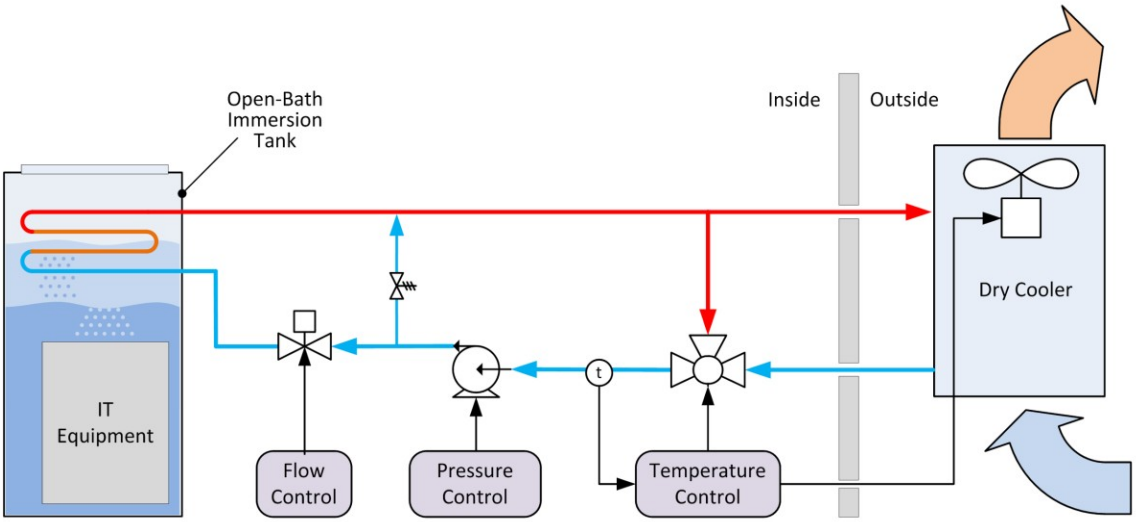

Figure 5-4: Immersion System Cooling with a Dry Cooler

5.2 BASELINE CHARACTERIZATION

The baseline characterization was performed with the Base Case, which used a commercial hybrid (liquid-air) cooling system supplied by SGI. The cooling system used direct liquid cooling for the processor components. Cooling distribution units provided the required cooling water. Forced-air cooling was used for the remaining electronic and electrical components. The forced-air cooling was provided by an SGI brand Cooling Rack (Figure 5-1).

The CDU and Cooling Rack transfer virtually all the heat from the IT equipment to the building water cooling system. The water temperatures supplied during the Base Case test were used in simulations that compared the Base Case and the Immersion Case. The Base Case test took place during a one-hour period while the IT equipment was running at a very high load provided by the LINPACK software. The one-hour period provided data for a single set of operational parameters. Data for other cooling water temperatures or different IT equipment loads were not collected.

Data collection points for the Base Case test (see Figure 5-5):

- SGI cooling system pump (P3) and fan power (P1)
- IT equipment power (P2)
- Cooling Water Supply Temperatures (T3, T6)
- Cooling Water Return Temperature (T7)
- Cooling Water Supply Flow Rates (F1, F2)
- Computational Performance (reported separately)

The energy consumption and thermal parameter measurements and calculated results from the Base Case test are listed in Tables D-1 through D-4.

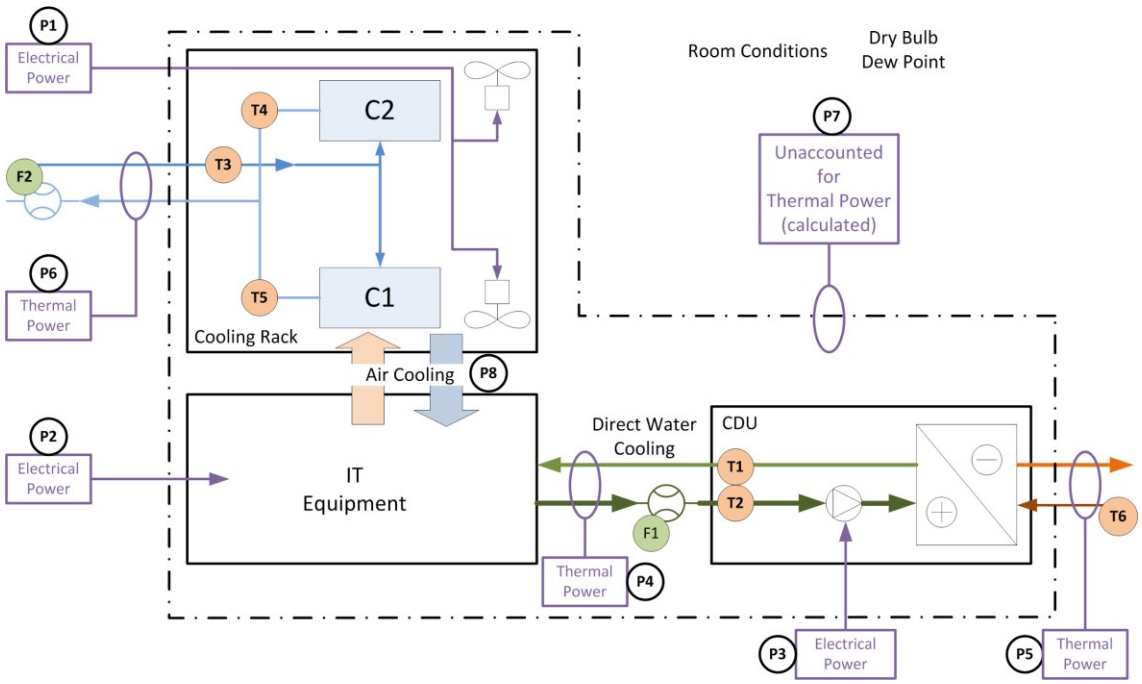

Figure 5-5: Base Case Test Sampling Point Schematic

5.3 DESIGN AND LAYOUT OF TECHNOLOGY COMPONENTS

The layout of the technology components will be presented in two sections: (1) the immersion tank interface with cooling water supply, and (2) details on the systems and components directly attached to the immersion bath.

Immersion Tank Cooling Interface

The supply of cooling water can be provided from any clean source, as long as that source can supply the water temperature and flow rate required to meet the IT equipment heat load. A "dry cooler" is an efficient source for cooling the water and was used in the Immersion Case simulations along with two other heat-rejection technologies (building water and cooling tower). A dry cooler can be implemented using a simple piping and control scheme (Figure 5-4).

Immersion Tank Systems and Components

The immersion bath consisted of a number of components and subsystems (Figure 5-6), which are described in the text following the figure.

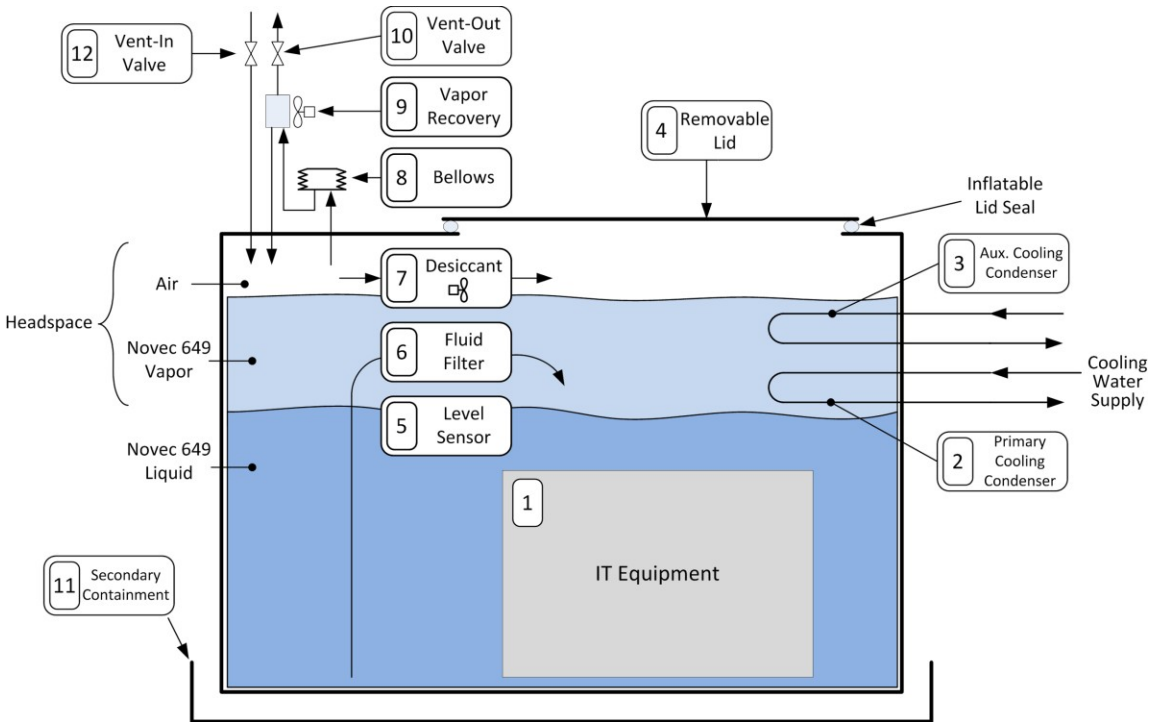

Figure 5-6: Bath Components and Subsystem Reference Diagram

1. IT Equipment: The IT equipment (#1) is completely submerged in the 3M Novec 649 liquid at all times. If the liquid level falls to a point where the IT equipment is exposed to the headspace, the power to the equipment is automatically turned off. The IT equipment is located directly below the removable lid (#4), which is sized such that equipment can be installed and removed for service.

2. Primary Condenser: The primary condenser (#2) is constructed with brazed copper tubes. Water flowing through the primary condenser removes heat from the Novec 649 vapor by condensing the vapor back to a liquid. The liquid falls back by gravity into the bath, and no pumping is required. An external valve (not shown) is used to modulate the water flow rate through the primary condenser to keep the vapor height within desired limits.

3. Hot Swap System: During operation, the temperature of the water entering the primary condenser is typically warmer than the ambient air outside the bath. This means that Novec 649 vapor can condense on the lid thereby reducing visibility. When removing the lid to service IT components, the lid may be wet with Novec 649 droplets, and much of that liquid could be lost to evaporation.

The Hot Swap System helps resolve the condensation issue. The Hot Swap System

includes a small pump, radiator, and fan (these items not shown) connected to a condenser (#3) inside the tank above the primary condenser. Before the lid is opened, water at room temperature is initiated through the secondary coil, causing the Novec 649 vapor to condense and fall back into the bath.

4. Removable Lid: A removable lid (#4) with an inflatable seal provides an opening needed to service any component located in the bath. The sealing performance of the lid is important, as significant amounts of Novec 649 vapor mixed with air in the headspace can escape without easily being detected.

5. Level Sensor: The liquid level is reduced if Novec 649 evaporates. This can occur when the lid is removed to add or remove equipment. A level sensor (#5) is needed to warn the operator when the liquid level is too low or too high. An emergency power off action was programmed using the level sensor readings to automatically turn off the IT equipment power should the liquid level be too low for adequate cooling.

6. Organic/Particulate Filtration: Components in electronic equipment, such as cabling, contain small levels of organic oils. These oils are easily extracted by the Novec 649 liquid and can subsequently be deposited by distillation on or near the boiling surfaces. This process may degrade the heat transfer performance. Activated carbon removes such contaminants. A pump draws liquid through a commercially available carbon cartridge (#6), which also removes particles that might be suspended in the liquid.

7. Moisture Control System: At startup, the Novec 649 liquid, as well as the electronics, are likely to contain a small amount of water. The boiling process vaporizes this water, which collects in the headspace. A fan recirculates the gases in the headspace through a renewable desiccant (#7) to control this moisture. The amount of desiccant is sized to minimize the replacement frequency. The desiccant changes colors when it is in need of regeneration.

8, 9, 10, and 12. Vent and Pressure Control Subsystem: This subsystem maintains atmospheric pressure in the headspace while minimizing vapor losses. If the power consumed by the IT equipment (#1) increases and/or the flow of cooling water decreases, the vapor level can rise considerably. As the vapor level rises, the air and possibly some vapor in the headspace may need to be vented outside of the facility via the vent-out valve (#10). The vent and pressure control subsystem also includes a bellows (#8) to accommodate small changes in the vapor height during normal operation. A vapor recovery system (#9) condenses vapor that may escape and returns it to the bath. Mechanical pressure and vacuum check valves (not shown) will act as backup to provide needed venting in the case of a vent component or power failure. Similarly, the bath will

take in air from the outside if a significant vacuum develops by opening the vent-in valve (#12).

11. Secondary Containment: To contain a leak or spill of liquid Novec 649, a secondary containment feature (#11) is necessary. The volume of the secondary containment system was capable of handling a worst-case spill event.

5.4 OPERATIONAL TESTING

The operational testing of immersion cooling was separated into two phases:

1. Pilot Case testing (at SGI)
2. Immersion Case testing (at NRL)

Pilot Case Testing (at SGI)

The Pilot Case testing period was from August 27, 2014, to September 12, 2014. The measurements for evaluating Performance Objective 3 (Computational Energy Efficiency) and 9 (CPU Chip Temperatures) were obtained during this test.

The data collection part of the test was run for approximately one hour after steady-state conditions were achieved. The computational performance was reported by the LINPACK software (Table 6.3-1). In addition, during the test, CPU temperatures (Figure 6.9-2) and energy consumption recorded.

Immersion Case Testing (at NRL)

The testing at NRL was split into two parts: Startup and normal operation. The ten-day startup period (October 7, 2014, to October 17, 2014) included filling the tank with 3M Novec 649, as well as installing and starting the IT equipment and the data collection system. Normal operation started on October 17, 2014, and ended in August 5, 2015.

Unexpected failures of immersion-cooled IT equipment limited the planned testing, particularly the thermal- and energy-related tests. The measurements were to be used for calculating the metrics of Performance Objectives 1, 2, 6, and 8. Although modeling was originally planned as an integral part of estimating the metrics, the lack of data due to these equipment failures increased reliance on modeling even more.

Time-series measurements were obtained over the 10-month test period to support calculations for liquid loss and vapor concentration monitoring. In addition, the cooling energy effectiveness (pPUE) was calculated for a limited period (Figure 6.1-3) to highlight the technology's energy efficiency potential. However, these results were not used to evaluate the performance objective metrics.

Liquid Loss
A liquid level sensor was used to record the Novec 649 liquid level in the bath. The measurements were combined with the record of liquid added during the liquid-loss evaluation period to determine the net liquid loss. The liquid level measurements are graphed in Figure 6.7-1. In Figure 6.7-1 a range of 100 on the Tank Liquid Level axis corresponds to 11.52 liters.

Novec 649 Vapor Concentrations
The Novec 649 vapor concentrations were measured at two locations: (1) where a technician would be during bath maintenance procedures, and (2) under the raised floor adjacent to the bath. The measurements from the under-floor location (Figure 6.4-1 bottom graph) were always lower than those taken from the breathing zone (Figure 6.4-1 top graph). Therefore the data from the breathing zone were analyzed to calculate the 8-hour TWA values (Figure 6.4-2 top graph) used to determine the final metric value.

Figure 6.5-1 shows the vapor concentration measurements at the breathing zone for the startup period.

Cooling Energy Efficiency
The measurements needed to calculate the actual immersion cooling energy efficiency were recorded for a limited time only. The measured cooling energy constituent are graphed in Figure 6.1-3 as "Dry Cooler Fan Power," "Water Loop Pumping Power," and "Tank Systems Power."

5.5 SAMPLING PROTOCOLS

Figure 5-5 presented the Base Case thermal, flow, and power sampling points. Table 5-1 lists the sampling point details. The measurements were obtained manually except for the compute performance results, which were provided as a report file by the LINPACK software.

Table 5-1: Base Case Test Sampling Point Details

Description	Source	Units	Result
IT Equipment Power [P2]	visual reading	kW	28.4
Cooling Rack Supply [T3] Temperature	visual reading	°C	19.88
Cooling Rack Electrical Power [P1]	visual reading	kW	2.04
Cooling Rack Flow Rate [F2]	visual reading	gpm	24.31
Direct Cooling Supply Temperature [T1]	visual reading	°F	67.32
Direct Cooling Flow Rate [F1]	visual reading	gpm	68.86

Direct Cooling Pump Power [P3]	visual reading	kW	3.23
CDU Supply Temperature [T6]	visual reading	°C	19.35
Room Dry Bulb Temperature	data from cooling rack	°C	19.66
Room Dew Point Temperature	data from CDU	°C	7.1

gpm = gallons per minute

The Immersion Case thermal, flow, and power sampling points data (Figure 5-7) were recorded in a database (see Table 5-2). Table 5-2 lists the sampling point details used to calculate an actual cooling pPUE for a limited period.

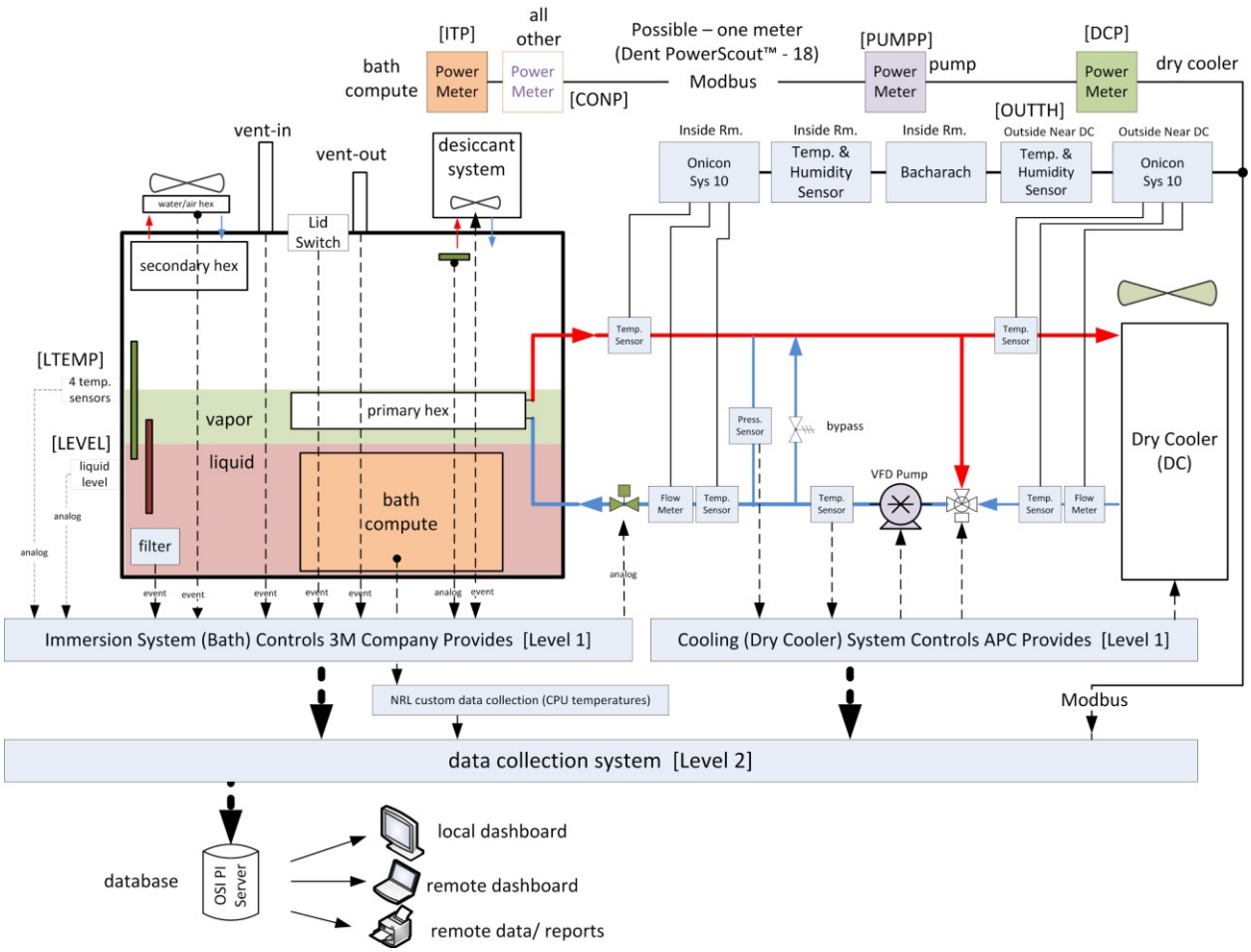

Figure 5-7: Immersion Case Test Sampling Point Schematic

Table 5-2: Immersion Case Test Sampling Point Details

Description	Source	Units	Results
[ITP] power to IT equipment in the bath	PowerScout meter Modbus	kW, kWh	See measurements for Performance Objective 1, Figure 6.1-3
[LEVEL] liquid level	Level Sensor 3M Controls	sensor value	See measurements for Performance Objective 7, Figure 6.7-1
[PUMPP] cooling pump power	PowerScout meter Modbus	kW	See measurements for Performance Objective 1, Figure 6.1-3
[DCP] dry cooler fan power	PowerScout meter Modbus	kW	See measurements for Performance Objective 1, Figure 6.1-3
[CONP] bath controls power	PowerScout meter Modbus	kW	See measurements for Performance Objective 1, Figure 6.1-3
[OUTTH] temperature and humidity near dry cooler	sensor Modbus	Temperature (°C)	See measurements for Performance Objective 1, Figure 6.1-3

Equipment Calibration

All the meters used for measuring vapor concentration, electrical power, water flow rate, and water temperature were purchased new for this project.

The Novec 649 liquid-level sensor was calibrated with actual measurements taken in the bath. See details for this work in Appendix B.

5.6 SAMPLING RESULTS

Due to the number of performance objectives the sampling results in the form of graphs and tables are shown in Section 6 and in Appendices. For convenience Table 5.6-1 is provided as a reference.

Table 5.6-1: Report Locations of Data and Results Figures and Tables

Data Description	Location
Cooling Energy Simulation Results	Table 6.1-2
Overall Energy Simulation Results	Table 6.1-2
Simulation Component Result Details	Table C-2
Computational Efficiency Data	Table 6.3-1
Novec 649 Normal Operation Vapor Concentration Measurements	Figures 6.4-1, 6.4-2
Novec 649 Maintenance Period Vapor Concentration Measurements	Figure 6.5-1
Greenhouse Gas Emissions Results	Tables 6.6-1, 6.6-2
Liquid Level	Figure 6.7-1
CPU Temperature Data	Figures 6.9-1, 6.9-2
Cooling Energy from actual measurements	Figure 6.1-3
Base Case Test Data	Tables D-1, D-2, D-3, D-4

6.0 PERFORMANCE ASSESSMENT

This section provides an overview, goals, and results for each performance objective.

6.1 IMPROVED COOLING ENERGY EFFICIENCY [PO1]

Metric: Cooling system energy use based on pPUE

Goal: 50 percent less cooling energy compared to the Base Case

The metric evaluations for Performance Objectives 1, 2, 6, and 8 were based on data center energy simulations. The Romonet software was utilized to create eight (8) data center models.

All models used average weather data for Washington, D.C. and assumed that the average IT power was 80 percent of a design maximum of 2 MW. The research advisors for this project suggested the 80 percent value as a maximum average power level. The 2 MW data center was selected because the cooling infrastructure equipment would typically be large enough to have good efficiency.

The models assume a retrofit situation where 80 percent of the IT equipment is being upgraded and there are two technology choices (Base Case and Immersion Case) for the upgraded equipment.

An IT equipment cooling technology will likely produce different overall energy efficiencies, depending on the data center cooling infrastructure of the data center being retrofitted. Two data centers were used in the models: one high efficiency and one low efficiency. Additional information on the two models is provided in Appendix C. This created four efficiency model combinations (Figure 6.1-1). Four additional combinations (Immersion B2 and B3, and Immersion A2 and A3) (Figure 6.1-2) combined to make eight (8) total models (Table 6.1-1). Four additional combinations (Immersion B2 and B3, and Immersion A2 and A3) (Figure 6.1-2) combined to make eight (8) total models (Table 6.1-1).

It was assumed that the Base Case (SGI hybrid cooling) would be retrofitted into the data center infrastructure so that the cooling water would be provided by the existing cooling water supply (heat rejection). Appendix D contains details for determining model input.

Since immersion cooling can use warmer water compared to the Base Case, three different heat rejection methods were modeled (Figure 6.1-2). Eight (8) model diagrams from the Romonet software are provided in Figures C-1 through C-8. The corresponding simulated combinations are shown in Table 6.1-1. Two of the model combinations (Base Case A and Immersion Case A3), indicated with bold italics, were used to evaluate Performance Objectives 1, 2, 6, and 8.

The simulated results for all combinations are provided in Table 6.1-2.

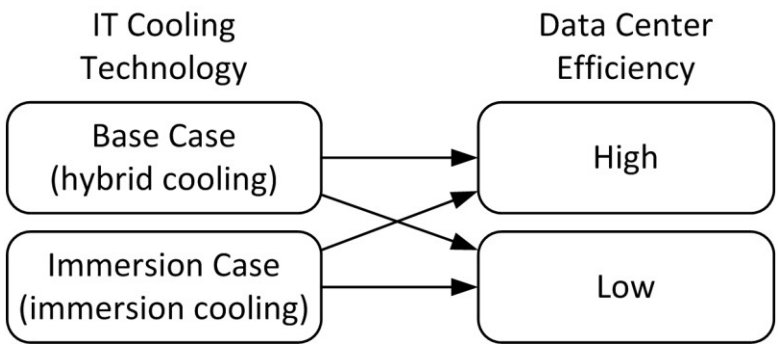

Figure 6.1-1: IT Cooling Technology and Data Center Efficiency Combinations

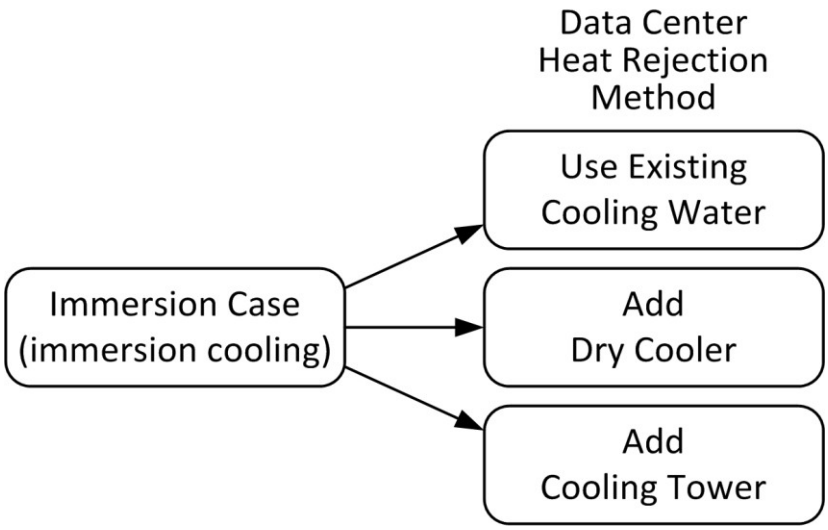

Figure 6.1-2: Immersion Cooling - Data Center Heat Rejection Combinations

Table 6.1-1: Combinations Simulated

Simulation ID	Data Center Efficiency Level	Heat Rejection Method
Base Case B	High	Existing
Immersion B1	High	Existing
Immersion B2	High	Dry Cooler
Immersion B3	High	Cooling Tower

Base Case A	***Low***	***Existing***
Immersion A1	Low	Existing
Immersion A2	Low	Dry Cooler
Immersion A3	***Low***	***Cooling Tower***

The Romonet simulation results (Table C-2) contain a listing of average power consumed for each component shown in Figures C-1 through C-8. A number of these components are providing cooling for the data center. Those components are indicated on the left as "Inside Cooling" (components located inside the building) and "Outside Cooling" (components located outside the building).

Equations 6-1 and 6-2 define the cooling partial PUE (pPUE):

Sum of cooling components = Inside Cooling components + Outside Cooling components (Eq. 6-1)

pPUE (cooling) = ((Sum of cooling components) + IT power) ÷ IT power (Eq. 6-2)

The calculations show a 73 percent (Table 6.2-1) cooling energy savings when the efficient immersion cooling option (Immersion Case A3) is compared to Base Case A, thereby meeting the goal (> 50 percent savings). It is interesting to note that the goal is also met when the choice is applied to a high-efficiency data center (Base Case B versus Immersion 3B).

Different assumptions will provide different energy savings estimates. For example, different climates, data center efficiency level, heat rejection method, and percentage of IT equipment being upgraded will affect the estimates. Those wishing to follow the energy estimate methods outlined here are strongly encouraged to consult with data center simulation experts and use inputs appropriate for their particular situation.

To highlight the low cooling energy potential of immersion cooling measurements were recorded for a limited time during the demonstration and were used to calculate periods where the cooling pPUE of just under 1.02 (Figure 6.1-3).

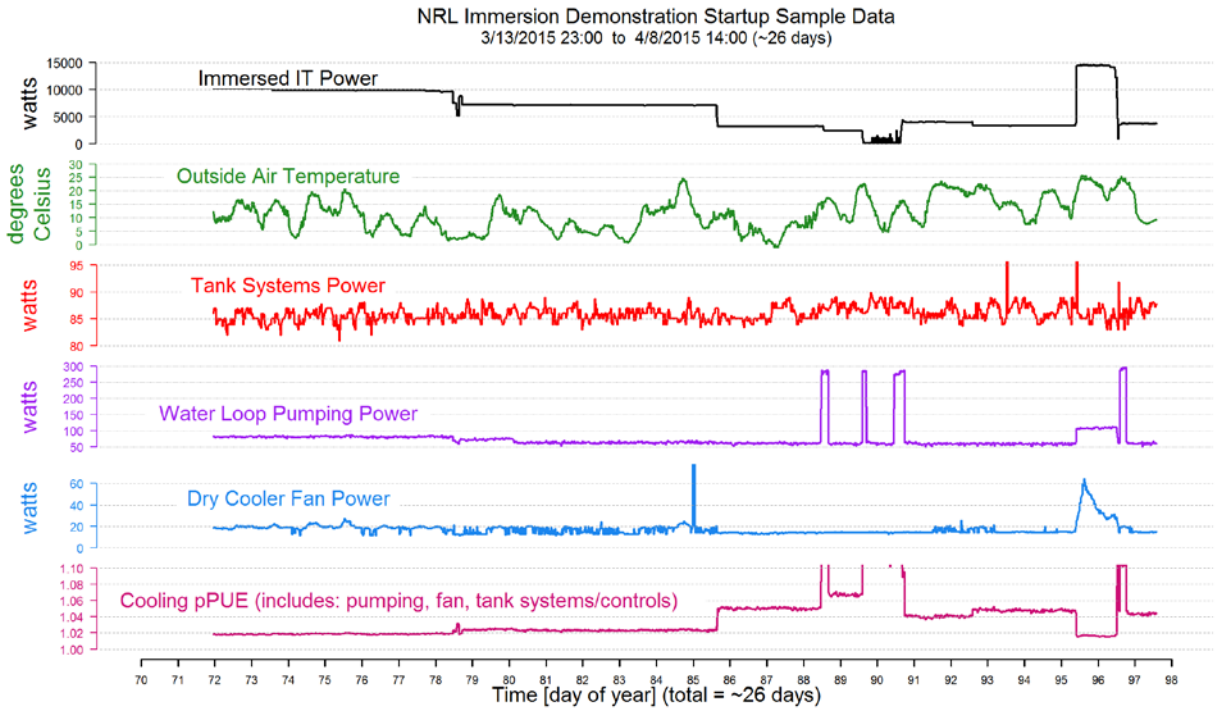

Figure 6.1-3: Calculated Cooling pPUE And Measured Constituents

The cooling pPUE for the high efficiency data center simulation was 1.06 and included the cooling energy needed for the 20 percent of air-cooled IT equipment. Therefore, the cooling pPUE did not approach the 1.02 seen during the short test.

Table 6.1-2: Simulation Results Summary

Low Efficiency Data Center		IT Power (kW)			Infractructure Power (kW)					
Case	Description	Air Cooled	Direct Cooled	Immersion Cooled	Inside Cooling	Outside Cooling	Other Infrastructure	Cooling pPUE	PUE	Cooling Energy Reduction (%)
Basecase A	Low Efficiency UPS and Chiller	321	1275		66.9	558	158	1.392	1.491	
Immersion 1A	Building Chilled Water	321		1275	20.3	543	158	1.353	1.452	10%
Immersion 2A	Add Dry Cooler with Adiabatic Feature	321		1275	20.0	162	154	1.114	1.210	71%
Immersion 3A	Add Cooling Tower	321		1275	20.0	151	154	1.107	1.203	73%

High Efficiency Data Center		IT Power (kW)			Infractructure Power (kW)					
Case	Description	Air Cooled	Direct Cooled	Immersion Cooled	Inside Cooling	Outside Cooling	Other Infrastructure	Cooling pPUE	PUE	Cooling Energy Reduction (%)
Basecase B	High Efficiency UPS and Chiller	321	1275		66.4	138	140	1.128	1.216	
Immersion 1B	Building Chilled Water	321		1275	19.8	139	140	1.099	1.187	22%
Immersion 2B	Add Dry Cooler with Adiabatic Feature	321		1275	19.8	91	139	1.070	1.157	46%
Immersion 3B	Add Cooling Tower	321		1275	19.8	75	139	1.059	1.146	54%

6.2 REDUCED OVERALL DATA CENTER SITE ENERGY CONSUMPTION [PO2]

Metric: Overall data center energy (PUE)

Goal: 15 percent improvement compared to the Base Case

Stretch Goal: 20 percent improvement compared to the Base Case

The assumptions and details for the modeling and simulations are provided in Section 6.1 above and in Appendix C.

The estimated percent of cooling energy savings as measured by the pPUE (Performance Objective 1) does not reflect the overall data center savings because data centers contain systems other than cooling that consume energy. To get a perspective on the overall energy savings associated with the immersion cooling technology, the often-used industry metric power usage effectiveness (PUE) was used.

Power usage effectiveness is defined as the total data center site energy consumption (including the IT equipment) divided by the IT equipment energy consumption.

Table 6.1-1 in Section 6.1 contains the calculated PUE values from the eight (8) Romonet simulations.

The same two cases (Base Case A and Immersion Case 3A) were used for evaluating this performance objective. The PUE results were 1.491 for Base Case A and 1.203 for Immersion Case 3A. These data result in a 19 percent savings on the total data center energy.

It is interesting to note that the PUE results using a high-efficiency data center were 1.216 for Base Case B and 1.146 for Immersion Case 3B. These data result in a 6 percent savings on the total data center energy. This demonstrates the law of diminishing returns.

Therefore, the goal for this performance objective (> 15 percent reduction of total data center energy) was met. The results fell just short of the stretch goal (> 20 percent reduction).

6.3 IMPROVED COMPUTATIONAL ENERGY EFFICIENCY [PO3]

Metric: Compute Rate / IT Equipment Power (MFLOPS/watt)

Goal: Immersion cooling ≥ 0 percent improvement compared to the Base Case

Stretch Goal: Immersion cooling 10 percent improvement compared to the Base Case

This performance objective is intended to investigate to what extent, if any, the immersion

cooling alters the IT equipment computational efficiency. The computational efficiency is defined as: compute performance (teraflops, or TFs) divided by the IT equipment power (kW).

The performance information resulting from LINPACK runs and the electrical power consumed by the IT equipment were measured during a limited test period during the Base Case and the Pilot Test (immersion cooling). The four measurements (two power and two performance) were used to calculate the metric for this performance objective. The final results used LINPACK parameters: Problem Size (N) = 672000, Performance Mode on, and Turbo-Enabled.

The calculated computational energy efficiency for the Base Case was 857 MFLOPS/watt versus 809 MFLOPS/watt for the Pilot Case (Table 6.3-1). The Pilot Case (immersion cooling) was more than 5 percent lower than the Base Case, with a small variance (0.2 percent) compared to another test using N=336000 (Figure 6.3-1). Considering the small variance, we conclude it is unlikely the goal of ≥ 0 percent would be met, and therefore even more unlikely the stretch goal would be met.

Lower energy efficiency for the Pilot Test (immersion cooling) is likely caused by the higher CPU temperatures compared to the Base Case (direct liquid cooling). The goal is not likely achievable with the high boiling temperature of Novec 649.

Table 6.3-1: Compute Performance, IT Equipment Power, and Computational Energy Efficiency

Test	Compute Performance (TFs)	IT Equipment Power (kW)	Metric (MFLOPS/watt)	Improvement
Base Case	24.33	28.404	857	NA
Pilot Case	23.93	29.58	809	-5.6%

Table Note: TFs = teraflops = 10^{12} floating point operations per second
MFLOPS = megaflops = 10^{6} floating point operations per second

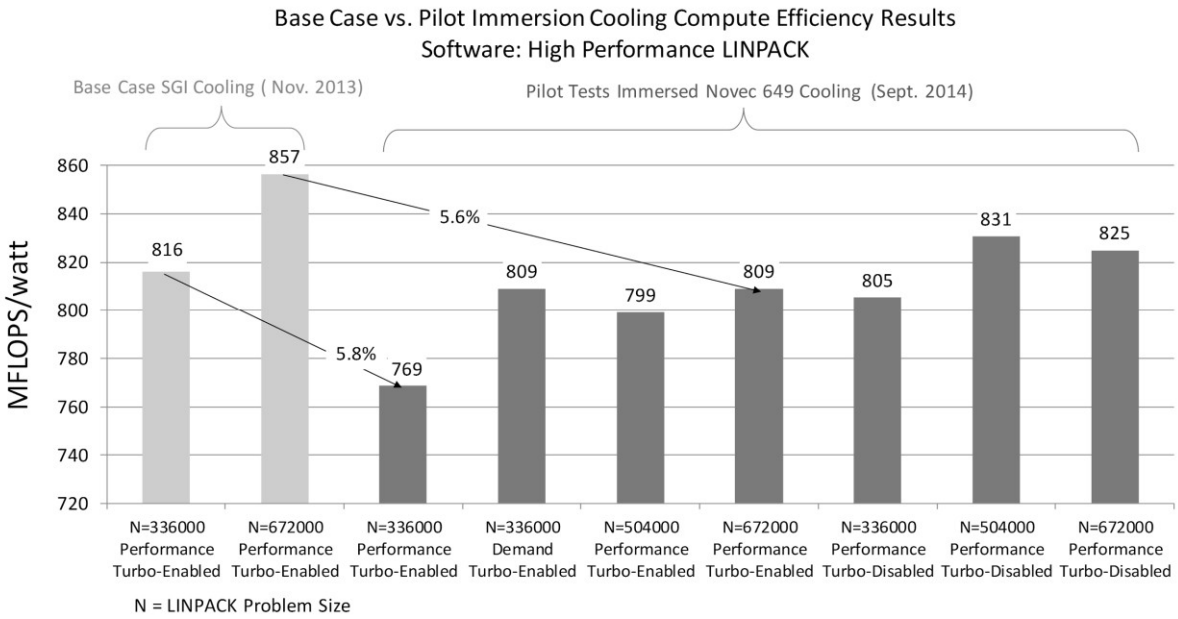

Figure 6.3-1: Other Computational Energy Efficiency Results

6.4 LOW CONCENTRATION OF NOVEC 649 VAPORS DURING NORMAL OPERATION [PO4]

Metric: Number of 8-hour time-weighted average (TWA) periods with concentrations above the goal or stretch goal

Goal: Zero periods above 150 ppmV

Stretch Goal: Zero periods above 75 ppmV

This performance objective was evaluated using the 8-hour time-weighted average (TWA) exposure methodology. From the SDS for Novec 649 (SDS 2015a) the TWA concentration limit is 150 ppmV. The goal was to have zero 8-hour TWA periods above 150 ppmV. The stretch goal was zero periods above 75 ppmV. The vapor level was measured 12 times per hour. The vapor measurement period started October 7, 2014, and ended August 5, 2015. Since the first 10 days were deemed to be the startup period, the normal operation period was October 17, 2014 to August 5, 2015.

Novec 649 vapor concentrations were measured in two places: Above the tank lid at what was termed the operator's breathing zone and under the raised access floor adjacent to the tank. Since Novec 649 is heavier than air, there was a concern that high levels under the floor may spread to other areas inside the data center. The underfloor measurements were always lower than the measurements at the breathing zone (Figure 6.4-1), and were lower than harmful levels. Therefore, the TWA values for underfloor measurements were not considered important, and the

breathing zone measurements were used to calculate the TWA values for this performance objective.

The measurements (bottom graph) and calculated 8-hour TWA vapor concentrations (top graph) are shown in Figure 6.4-2. The maximum TWA value was 48 ppmV, therefore both the goal and stretch goal were met.

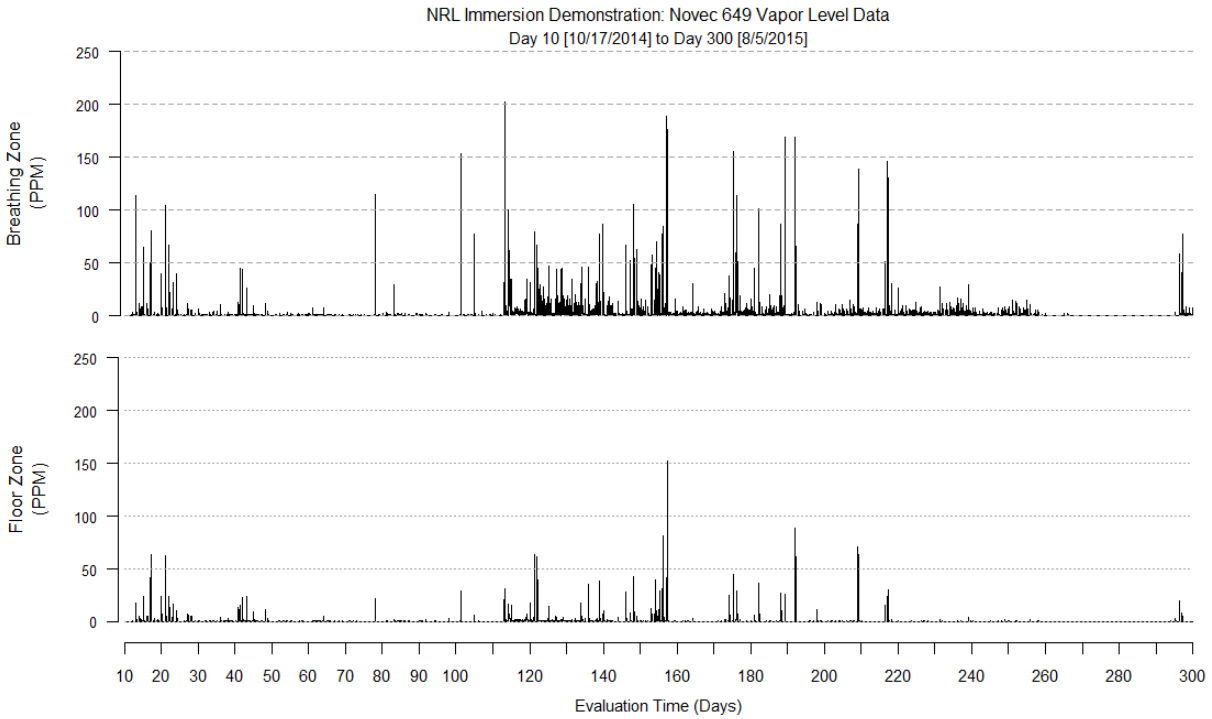

Figure 6.4-1: Breathing Zone Vapor Concentration Compared to Floor Zone Vapor Concentration During Normal Operation

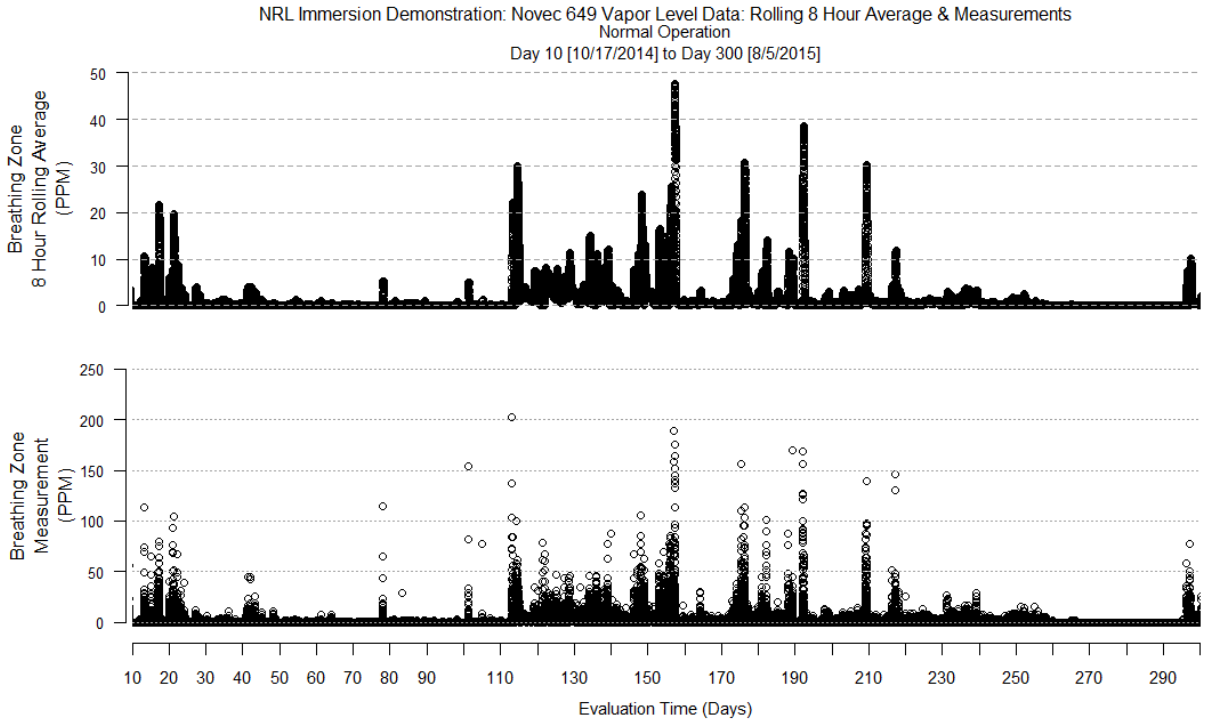

Figure 6.4-2: Breathing Zone Novec 649 Vapor Measurements and Calculated 8-Hour Time Weighted Averages for Normal Operation

6.5 LOW CONCENTRATION OF NOVEC 649 VAPORS DURING STARTUP OR MAINTENANCE [PO5]

Metric: Maximum measured vapor concentration

Goal: Zero measurements above 100,000 ppmV

This performance objective was created to capture incidents when operators may be exposed to high vapor concentration levels for short periods of time while performing startup or maintenance activities on the bath or IT equipment in the bath.

We assumed that the no observed adverse effect limit (NOAEL) applies. The NOAEL for Novec 649 vapor is 100,000 ppmV, based on a cardiac sensitization study and a four-hour acute inhalation study (SDS 2015a). This evaluation assumes startup and maintenance incidents would last less than four continuous hours.

As mentioned in Section 6.4, the Novec 649 vapor underfloor concentrations were consistently much lower than those observed at the breathing zone, so this analysis covers only the measurements at the breathing zone. The period from October 17, 2014, to March 5, 2015, had zero breathing zone vapor concentrations above 200 ppmV. Consequently, this period is within the NOAEL.

There was a brief period for a single week, starting from the time the tank was filled on October 7, 2014, when the vapor monitoring system was sending improperly formatted concentration values to the database. We were able to re-interpret the database values as plotted in Figure 6.5-1. The maximum corrected concentration measurement was approximately 120 ppmV.

Our corrected data indicate zero measurements above 200 ppmV (Figure 6.5-1 green trace) for the entire vapor concentration evaluation period. Therefore the goal (< 100,000 ppmV) for this performance objective was achieved.

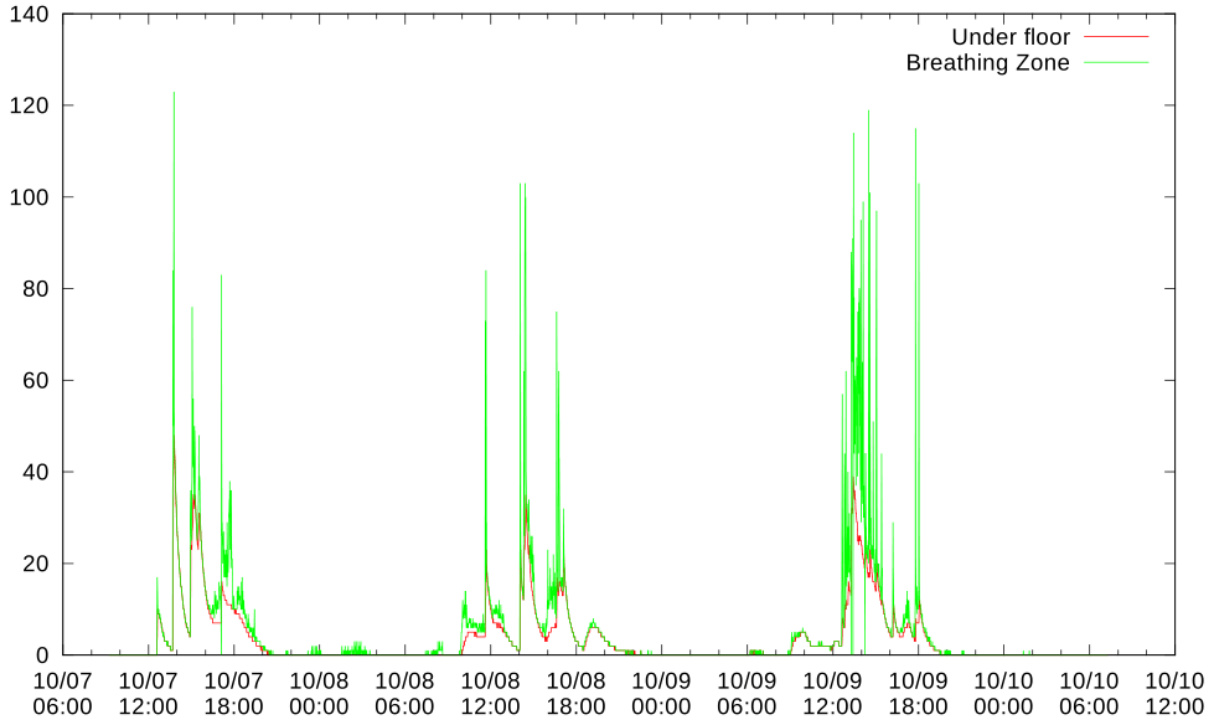

Figure 6.5-1: Startup Period Breathing Zone Novec 649 Vapor Concentration Measurements. Vertical axis is in units of ppmV.

6.6 REDUCTION IN GREENHOUSE GAS EMISSIONS [PO6]

Metric: Carbon Dioxide Equivalent (CDE) reduction using the EPA Greenhouse Gas Equivalencies Calculator

Goal: Lower CDE compared to the Base Case

The calculator uses the U.S. annual non-baseload CO_2 output emission rate in the Emissions & Generation Resource Integrated Database (eGRID) to convert reductions of kilowatt-hours into avoided units of carbon dioxide emissions. We used metric tons as the unit of measure. The conversion is 6.89551×10^{-4} metric tons CO_2/kWh (EPA 2015).

There are at least two perspectives that can be applied to analyzing the direct greenhouse gas reductions: (1) to base the reduction on the overall data center energy savings, or (2) to base the reduction on the data center cooling energy savings only. The results of both perspectives are presented below.

Three different immersion cooling alternatives, along with the Base Case, were compared for two data center efficiencies (low and high). The three immersion cooling alternatives are described in Section 6.1 and pictured in Appendix C.

The values for yearly energy use (overall and cooling) come from the 2 MW IT design load simulation results as described in Section 6.1 and Appendix C. The eight (8) resulting combinations were used to create the six (6) reduction comparisons in Table 6.1-2.

The CDE metric ton reduction was determined by entering the yearly energy use for each of the sixteen cases using the online EPA calculator (EPA 2015).

It was assumed that a DoD data center would most likely to be faced with the choice of selecting between the Base Case and Immersion Case in a low-efficiency data center. Immersion Case 3A (with cooling tower) was assumed to be the most likely cooling infrastructure selected if the decision was to choose immersion cooling. Therefore, Base Case A and Immersion Case 3A were used to calculate the metric value for this performance objective (Table 6.6-1).

Since changes to one data center system can affect other systems, looking at the overall data center energy use is the most accurate.

The CDE greenhouse gas emissions were 19 percent lower when Immersion 3A cooling was selected, compared to Base Case A (hybrid) cooling based on the total data center energy (Table 6.6-1). It is interesting to note that the CDE tons saved based on the total overall data center energy (2,772 tons) were very close to those for cooling energy (2,744 tons) (Table 6.6-2).

This suggests that the savings for cooling was responsible for virtually all of the energy savings. This is expected because the changes were to the cooling system only.

Table 6.6-1: CDE Changes Based on Total Data Center Energy

Low Efficiency Data Center

	Data Center Electricity Consumed (kWh)	Carbon Dioxide Equivalent (metric tons)	Carbon Dioxide Equivalent Reduction (metric tons)	Carbon Dioxide Equivalent Reduction (%)
Basecase A	20,848,863	14,376		
Immersion 1A	20,302,681	14,000	376	3%
Immersion 2A	16,926,384	11,672	2,704	19%
Immersion 3A	16,829,028	11,604	2,772	19%

High Efficiency Data Center

Basecase B	16,999,529	11,722		
Immersion 1B	16,599,191	11,446	276	2%
Immersion 2B	16,177,945	11,156	566	4%
Immersion 3B	16,031,990	11,055	667	5%

Table 6.6-2: CDE Changes Based on Cooling Energy

Low Efficiency Data Center

	Cooling Electricity Consumed (kWh)	Carbon Dioxide Equivalent (metric tons)	Carbon Dioxide Equivalent Reduction (metric tons)	Carbon Dioxide Equivalent Reduction (%)
Basecase A	5,476,527	3,776		
Immersion 1A	4,936,154	3,404	372	10%
Immersion 2A	1,592,441	1,098	2,678	71%
Immersion 3A	1,495,949	1,032	2,744	73%

High Efficiency Data Center

Basecase B	1,788,225	1,233		
Immersion 1B	1,391,368	959	274	22%
Immersion 2B	973,903	672	561	45%
Immersion 3B	829,211	572	661	54%

6.7 DIELECTRIC LIQUID LOSS [PO7]

Metric: Cost ($) Novec 649 / Cost ($) IT Electrical Energy

Goal: Less than or equal to 1 percent

Stretch Goal: Less than 0.1 percent

The Novec 649 is expensive at $75/liter compared to "free" liquids such as air and water, which are typically used for heat transfer in data center applications. Novec 649 is very volatile, and if left in an unsealed container will evaporate at a considerable rate.

This performance objective is targeted to find if the equipment demonstrated does an adequate job of containing Novec 649. The goal of 1 percent and stretch goal of 0.1 percent were considered reasonable at the time the Demonstration Plan was developed. However, the liquid loss turned out to be much higher than the goal.

The metric for this PO was evaluated over the time period starting on 10/14/2014 and ending on 8/5/2015. The liquid lost and IT electrical energy consumed during this period are estimated below.

Liquid Lost

Two quantities are needed to estimate the liquid lost during the period:

1. Amount of liquid added to the bath
2. The amount of liquid needed to bring the final liquid level to the level at the start of the evaluation period

Liquid Added to the Bath

The Novec 649 liquid required to make up for losses was provided in 12-liter bottles. These bottles contained 17.2 kilograms (kg) of liquid each (10.64 liters at 20°C). The liquid was added as needed during the demonstration to keep the IT equipment covered with the Novec 649 liquid. The total amount of liquid added was determined by obtaining a count of bottles emptied into the bath during the evaluation period. A total of six bottles were emptied into the bath (J. Osburn, NRL, pers. comm. 2015). Therefore, the known direct additions totaled 103.2 kg (63.85 liters at 20°C).

The Amount of Liquid Needed to Bring the Final Liquid Level to the Original Level

The level of the liquid in the bath was continuously measured and recorded in the PI database. The database values (count) at the end and beginning of the evaluation period were 1927 and 2139, respectively (Figure 6.7-1) at 50°C. The translation of level values (count) found in the database to a volume change in the bath is 8.68 per liter

(Appendix B). Therefore 212 (2139 - 1927) level value change equals 24.42 liters at 50°C or 23.10 liters at 20°C.

Liquid Loss Summary

The total liquid lost was 87 (63.85+23.10) liters. The dollar value of the liquid lost was $6,525 (87 liters x $75/liter).

IT Equipment Electrical Energy Consumed

The electrical power to the IT equipment in the bath was separately metered and the data were continuously recorded in the PI database. The metered data included accumulated kilowatt-hours, and therefore the total electrical energy could be determined by subtracting the reading of 10/14/2104 from that on 8/5/2015. The difference of these two readings was 19,667 kWh. The cost of electrical power at the demonstration site was $0.09/kWh (J. Osburn, NRL, pers. comm. 2015). Therefore, the cost of the electrical energy consumed by the IT equipment during the liquid-loss evaluation period was $1,770.

Summary

The cost of the lost liquid and electrical energy consumed were $6,525 and $1,770, respectively, with a ratio of 3.68, or 368 percent. The goal and stretch goal of 1 percent and 0.1 percent, respectively, were not met.

A number of potential contributing factors causing the unacceptable and unexpected liquid loss were discussed. One factor could be the time the bath lid was open, which was more than expected due to the high number of maintenance requests (Section 6.12). In addition, turbulent airflow within the data center may have contributed to the high loss rate. There will be technical challenges containing volatile fluids. Experiments attempting to characterize and isolate the liquid loss mechanisms were not conducted.

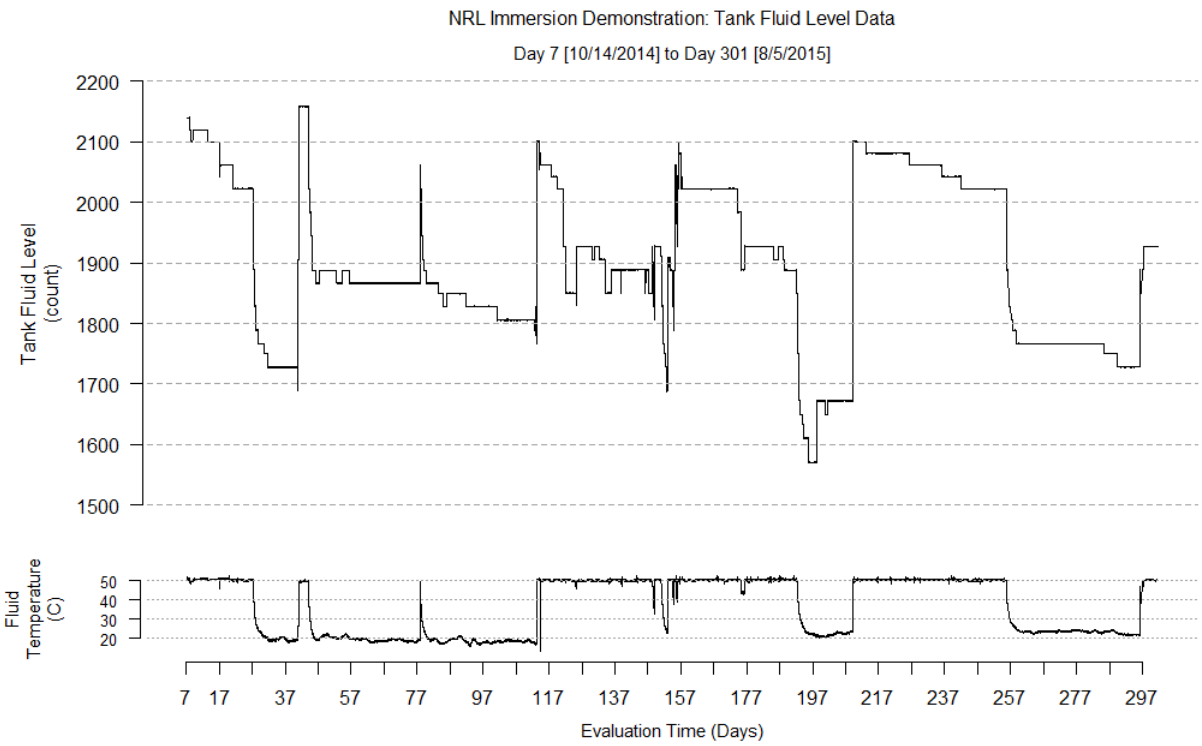

Figure 6.7-1: Liquid Level and Temperature Measurement Data

6.8 SYSTEM ECONOMICS (QUALITATIVE) [PO8]

Metric: Simple payback period

Goal: Payback less than 4 years

Stretch Goal: Payback less than 3 years

The economic analysis assumed that a low-efficiency infrastructure data center was scheduled to replace all IT equipment with supercomputing equipment, and there were two choices for the replacement cooling infrastructure:

1. Hybrid (water and air) direct cooling (Base Case A)
2. Two-phase immersion cooling (Immersion Case 3A)

Both cases assumed an average IT power level of 909 kW. This power level equated to 16 SGI M-Racks and 32 immersion baths. The input assumptions for calculating the payback period for Immersion Case 3A are provided in Table 6.8-1 (Forecast Data).

The economic analysis is a forecast based on improved metrics compared to the demonstration

results. For example, based on measurements, the estimate for the liquid loss was much higher than expected (104 liters/year). The technology would not be viable without a dramatically lower liquid loss. The liquid loss used in the forecast was assumed to be 10 percent of the cost of the electric energy for the IT equipment, or 18 liters per year per bath. Table 6.8-1 shows the demonstration results and other forecasted parameters (reduced by 50 percent) used in the NPV and payback calculations.

Table 6.8-1: Immersion Case Results and Forecasted Data

Metric	Immersion Results	Forecast Data
Novec 649 Liquid Loss	85 liters for 10 months ($6,525) 102 liters/year ($7,650)	18 liters/year ($1,350)
Novec 649 Bath Liquid Volume	595 liters ($44,625)	297 liters ($22,312)
Bath Cost	$91,000 each	$45,500 each

The system economics, comparing one case to the other (Base Case A and Immersion Case 3A), were evaluated using two financial measures:

1. Calculate the simple payback period
2. Calculate the NPV using the NIST building life cycle cost (BLCC) calculator

Note that the comparison is between Base Case A and Immersion Case 3A with the forecast data in Table 6.8-1.

Three inputs were used:

- First-year capital costs (IT equipment and cooling equipment)
- Yearly energy consumed for the entire data center (based on simulated PUE results)
- Yearly cost of 3M Novec 649 liquid losses (immersion case only)

Payback Period Analysis

The first-year capital costs for the Immersion Case were $1.9 million higher compared to the Base Case (Figure 6.8-1). The Immersion Case shows a $103K/year reduction in energy use and a liquid loss cost of $43.1K/year, resulting in a net operational cost reduction of $60K/year. The simple payback period is therefore approximately 32 years ($1.9 million/$60K). The goal

(< 4 years) and stretch goal (< 3 years) were not met.

Net Present Value Analysis

A seven-year life cycle cost comparison was calculated for the two choices using the NIST BLCC calculator. The input assumptions for the calculator are shown in Figure 6.8-1, and the results from the analysis are provided in Figure 6.8-2.

The NPV for the Immersion Case was calculated to be 9.5 percent more than the Base Case. The higher NPV is primarily due to the cost of initially filling the baths with Novec 649 ($22.312k/bath for 32 baths, for a total of $713.98k) and bath enclosure costs ($45.5k/bath for 32 baths, for a total of $1,456k). These results suggest that design improvements, beyond those assumed for this analysis (see Forecast Data in Table 6.8-1), are needed before the immersion cooling option will be financially viable. The higher capital cost for the immersion cooling option may be offset by lower cooling infrastructure capital costs if a new data center is involved.

Summary

The initial fill volume and bath cost were high because the IT equipment used in the demonstration was not specifically designed for two-phase immersion cooling. Before immersion cooling can be cost competitive with existing cooling methods there needs to be a substantial increase in the amount of IT equipment that can be contained in a given volume. This density increase may involve a complete rethinking of current HPC computing architecture.

Version:Oct. 21, 2015

Assumptions

Total Design IT Power	908.79	kW	
Maximum IT Power per Bath	28.4	kW	
Design Number of Baths	32.00		
Maximum IT Power per M-Rack	56.80	kW	
Design Number of M-Racks	16.00		
CDU	$ 15,000	/ea	
Cooling Rack	$ 15,000	/ea	
M-Rack	$ 3,000	/ea	
IT Hardware per M-Rack w/o CPUs	$ 500,000	/M-Rack	
CPUs per M-Rack	288		
CPU Component Cost	$ 1,000	/ea	
3M Novec 649	$ 75	/liter	
Novec 649 Initial Fill per Bath	297	liters	
Cost of Bath Enclosure	$ 45,500	ea	
Fluid Loss per Year per Bath	17.95	liters	87 for 10 months
Operational Average IT Power per M-Rack	28.40	kW	
Operational Average IT Power per Bath	14.20	kW	
Cost of Electricity	$ 0.090	/kWh	NRL Current Cost
PUE for Base Case	1.491		
PUE for Immersion Case	1.203		

	Year 1	Year 2	Year 3	Year 4	Year 5	Year 6	Year 7
Base Case							
Capital Cost (16 M-Racks)							
CDUs (4)	$ 60,000						
Cooling Racks (8)	$ 120,000						
M-Racks (16)	$ 48,000						
IT Hardware w/o CPUs (16 M-Racks)	$ 8,000,000						
CPU Components (288 x 16 = 4608)	$ 4,608,000						
Total	**$ 12,836,000**						
Operation Cost (16 M-Racks)							
Electrical Power(454.4 kW, PUE 1.491) kWh	5,934,991	5,934,991	5,934,991	5,934,991	5,934,991	5,934,991	5,934,991
Electrical Energy Cost	$ 534,149	$ 534,149	$ 534,149	$ 534,149	$ 534,149	$ 534,149	$ 534,149
Total	**$ 13,370,149**	**$534,149**	**$534,149**	**$534,149**	**$534,149**	**$534,149**	**$534,149**
Immersion Case							
Capital Cost (32 Baths)							
Baths(32)	$ 1,456,000						
3M 649 (297 litersx32x$75)	$ 712,792						
IT Hardware w/o CPUs (16 M-Racks)	$ 8,000,000						
CPU Components (144 x 32 = 4608)	$ 4,608,000						
Total	**$ 14,776,792**						
Operational Cost (32 Baths)							
Electrical Energy (454.4 kW, PUE 1.22) kWh	4,788,594	4,788,594	4,788,594	4,788,594	4,788,594	4,788,594	4,788,594
Electrical Energy Cost	$ 430,973	$ 430,973	$ 430,973	$ 430,973	$ 430,973	$ 430,973	$ 430,973
Fluid Loss(32*104*75)$	$ 43,080	$ 43,080	$ 43,080	$ 43,080	$ 43,080	$ 43,080	$ 43,080
Total	**$ 15,207,766**	**$430,973**	**$430,973**	**$430,973**	**$430,973**	**$430,973**	**$430,973**

Figure 6.8-1: BLCC Version 5.3-15 Inputs

NIST BLCC 5.3-15: Summary LCC

Consistent with Federal Life Cycle Cost Methodology and Procedures, 10 CFR, Part 436, Subpart A

General Information

File Name:	Life-Cycle-Cost-v7
Date of Study:	Wed Oct 21 10:46:35 PDT 2015
Analysis Type:	FEMP Analysis, Energy Project
Project Name:	Immersion
Project Location:	District of Columbia
Analyst:	LBNL
Base Date:	1-Jan-16
Service Date:	1-Jan-16
Study Period:	7 years 0 months (January 1, 2016 through December 31, 2022)
Discount Rate:	3%
Discounting Convention:	End-of-Year

Discount and Escalation Rates are REAL
(exclusive of general inflation)

Alternative: Basecase

LCC Summary

	Present Value	Annual Value
Initial Cost	$12,836,000	$2,060,796
Energy Consumption	$3,412,326	$547,842
Energy Demand Costs	$0	$0
Energy Utility Rebates	$0	$0
Water Usage Costs	$0	$0
Water Disposal Costs	$0	$0
Annually Recurring	$0	$0
Non-Annually Recurring	$0	$0
Replacement Costs	$0	$0
Less Remaining Value	$0	$0
	---	---
Total Life-Cycle Cost	**$16,248,326**	**$2,608,638**

Alternative: Immersion

LCC Summary

	Present Value	Annual Value
Initial Cost	$14,776,792	$2,372,386
Energy Consumption	$2,753,204	$442,022
Energy Demand Costs	$0	$0
Energy Utility Rebates	$0	$0
Water Usage Costs	$0	$0
Water Disposal Costs	$0	$0
Annually Recurring	$268,416	$43,094
Non-Annually Recurring	$0	$0
Replacement Costs	$0	$0
Less Remaining Value	$0	$0
	---	---
Total Life-Cycle Cost	**$17,798,412**	**$2,857,501**

Figure 6.8-2: BLCC Version 5.3-15 Calculation Summary

6.9 LOWER CPU CHIP TEMPERATURES [PO9]

Metric: Average CPU Temperature

Goal: Equal or below the Base Case

To find out if the immersion cooling technology affected the CPU chip temperatures compared the Base Case, the CPU temperature data was collected during the Base Case test and Pilot Test. To provide a consistent IT equipment computing load, the software benchmarking tool LINPACK was run during both tests.

The Base Case test temperature data for all 144 CPUs were obtained over approximately a one-hour period (Figure 6.9-1). Dashed lines for two temperature traces (high temperature and low temperature) are shown to point out that individual CPUs operated a bit warmer or cooler than other CPUs. The reasons for the temperature difference across the 144 CPUs were not investigated. The mean temperature for the Base Case test was 51.6°C.

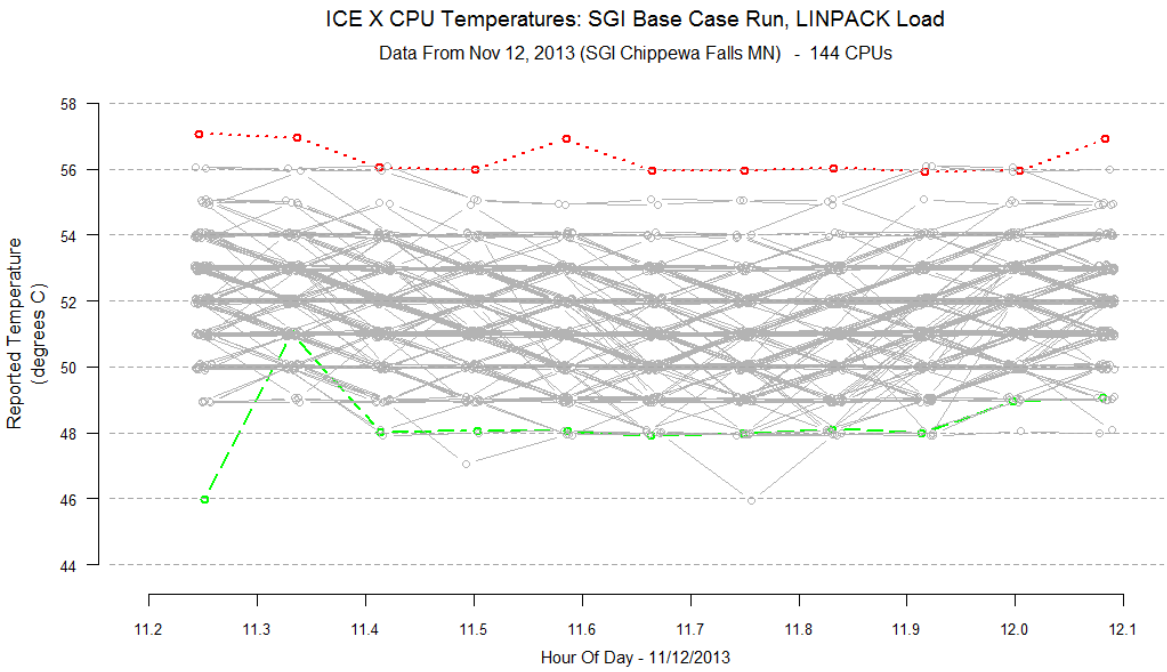

Figure 6.9-1: Base Case CPU Temperatures

The Immersion Case CPU temperature data was obtained on September 9, 2014 during the Pilot Test. The mean temperature during the Immersion Case test between the hours of 18:30 and 20:00 was 70.2°C. The low temperature periods (Figure 6.9-2) are caused by the LINPACK software restarting after solving a set of linear equations. As expected, during these low-power periods the CPU temperature approached the Novec 649 boiling-point temperature of 49°C.

A small number of CPUs reported temperatures considerably higher than 75°C during the Immersion Case run (Figure 6.9-2). The cause of this was not investigated. 3M has suggested that these high temperatures may be caused by contamination of the boiling-enhancement coating on the CPUs and thereby decreasing the heat flux.

The goal (equal or below the Base Case) for this performance objective was not met. The CPU temperatures averaged approximately 20°C higher when the computer was immersion-cooled compared to the Base Case. This higher temperature may have been due to a couple of contributing factors. The liquid temperature close to the CPU is 49C in the immersion case (Novec 649 boils at 49C) and 20C in the Base Case (20C cooling water). The goal is not likely achievable with the high boiling temperature of Novec 649. The other contributing factor is that the phase change taking place on chip heat-transfer surfaces may also have deposited pollutants, which, in turn, would have limited the heat transfer.

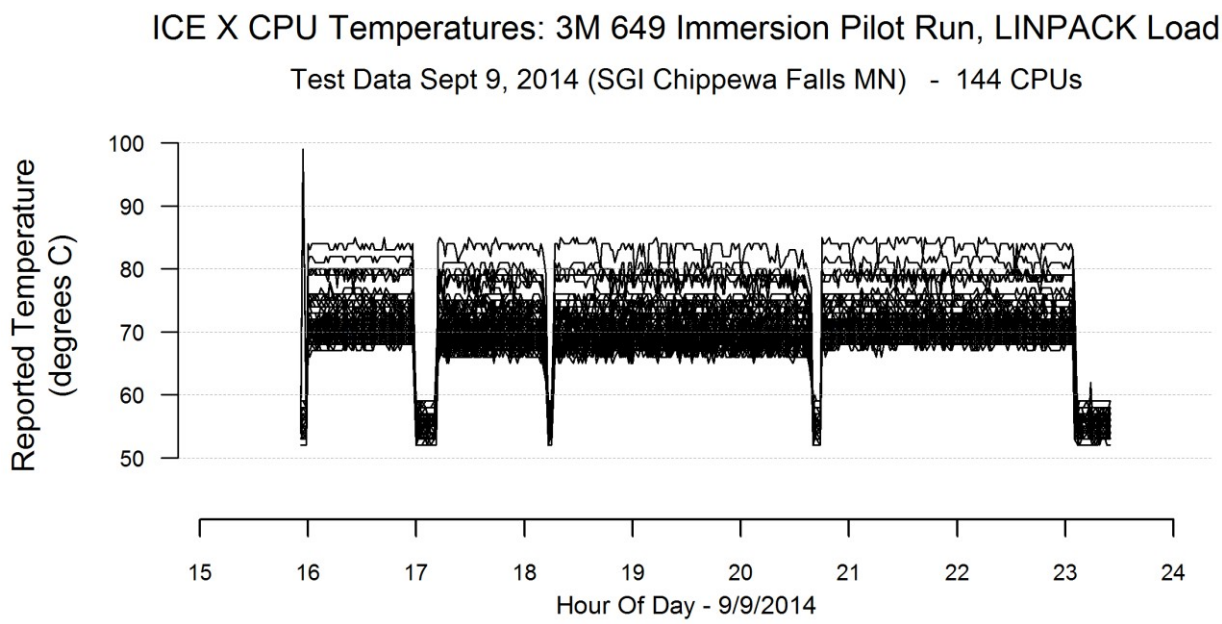

Figure 6.9-2: Immersion Case CPU Temperatures

6.10 HIGH USER SATISFACTION, LOW NUMBER OF CONCERNS (QUALITATIVE) [PO10]

The users (NRL personnel) were asked to report their input on two categories of concerns: (1) safety and (2) operational. For each category, the user was asked to list concerns and concerns that were not resolved.

Metric: Number of safety concerns
Number of safety concerns that were not resolved
Number of operational concerns
Number of operational concerns that were not resolved

Goal: Zero unresolved safety concerns

Stretch Goal: The goal met + zero operational concerns that were not resolved

Safety Concerns

1. Immersed electronics failed during the demonstration. There was a concern that perfluoroisobutylene (PFIB) formed from spark events may have been involved in the failures. 3M tested the liquid for PFIB contamination and none was found. Naval Research Laboratory personnel did not have a concern regarding PFIB exposure after the 3M test results were known.

2. Using gloves while servicing equipment in the bath was recommended. Service personnel reported that gloves did not allow the needed dexterity. Therefore, service was often performed without gloves although it caused skin dryness. The NRL did not consider this to be a safety concern based on the SDS sheet for Novec 649 ("no protective gloves required").

The NRL personnel reported that both safety concerns were resolved. Therefore, the goal was met.

Operational Concerns

NRL personnel reported 14 Operational Concerns:

1. Glass lid susceptible to cracking
2. Glass lid unwieldy
3. No status indication on filters (carbon, desiccant, and silica gel)
4. Service near the bottom of the bath was difficult
5. Working in the bath with gloves often resulted in poor dexterity
6. Bath documentation was nonexistent

7. Novec 649 vapor bubbles degraded the visibility during service
8. Power supplies failed early in the demonstration
9. The apparatus used for filling the bath initially caused loss of liquid
10. Liquid loss during the demonstration
11. Unable to tell if the top lid was sealed
12. Curtain around the bath (to limit the vapor loss) had to be pushed aside during maintenance
13. High number of logic board failures
14. InfiniBand (networking boards) connectivity not consistent

The goal was met, but the stretch goal was not.

Other than the repeated electronic failures (Concerns 13 and 14), overcoming the remaining operational concerns could also be a major technical challenge.

6.11 IMPROVED IT POWER DENSITY (QUALITATIVE) [PO11]

Metric: Compute power per square foot data center floor space (kW/ft^2)

Goal: Equal to or better than the Base Case

Stretch Goal: Significantly better than the Base Case

Heat or power density, IT power per square foot data center floor space (kW/ft^2), is an attribute cited as a potential advantage with two-phase immersion cooling. The actual metric used for this performance objective is sockets per square foot data center floor space (sockets/ft^2) as a substitute for kW/ft^2. Supercomputer manufacturers commonly use the sockets/ft^2 metric as a measure of density. Each socket can hold one CPU. The computing throughput and maximum power consumption is largely determined by the CPU make and model.

Base Case Density (hybrid cooling)

Figure 6.11-1 shows the highest density (sockets/ft^2) using the SGI ICE X model equipped with the cooling option used in the Base Case. Cooling distribution units are included in the required space because they are a required component of the SGI ICE X system. Floor space for aisle ways is also included. The density (sockets/ft^2) for the SGI ICE X (Base Case) maximum density layout is 9.44 sockets per square foot.

Immersion Case Density

Figure 6.11-2 shows an immersion cooling multi-tank layout using the dimensions of the NRL demonstration bath. Aisle ways are added to enable installation or removal of baths. The density for the Immersion Case was 2.1 sockets per square foot. Space that may be saved by removing cooling equipment from the data hall was not considered.

The Immersion Case had a density of only 22 percent (2.1/9.44) of the Base Case. Thus, neither the goal or the stretch goal for this performance objective was met.

The results for this performance objective were expected. The demonstrated IT equipment was designed to be air cooled and therefore was not optimized for two-phase immersion cooling. In addition, the bath was a prototype design. Future bath designs could significantly improve the maximum density. An advantage of typical air-cooled IT equipment is the ability to stack the equipment vertically using the common 6.5 foot (2 m)-high data center rack. Immersion-cooled IT equipment is currently laid out horizontally to be able to lower the equipment into the bath. Consequently, this configuration takes up more floor space for a given amount of IT equipment compared to the common vertical data center rack.

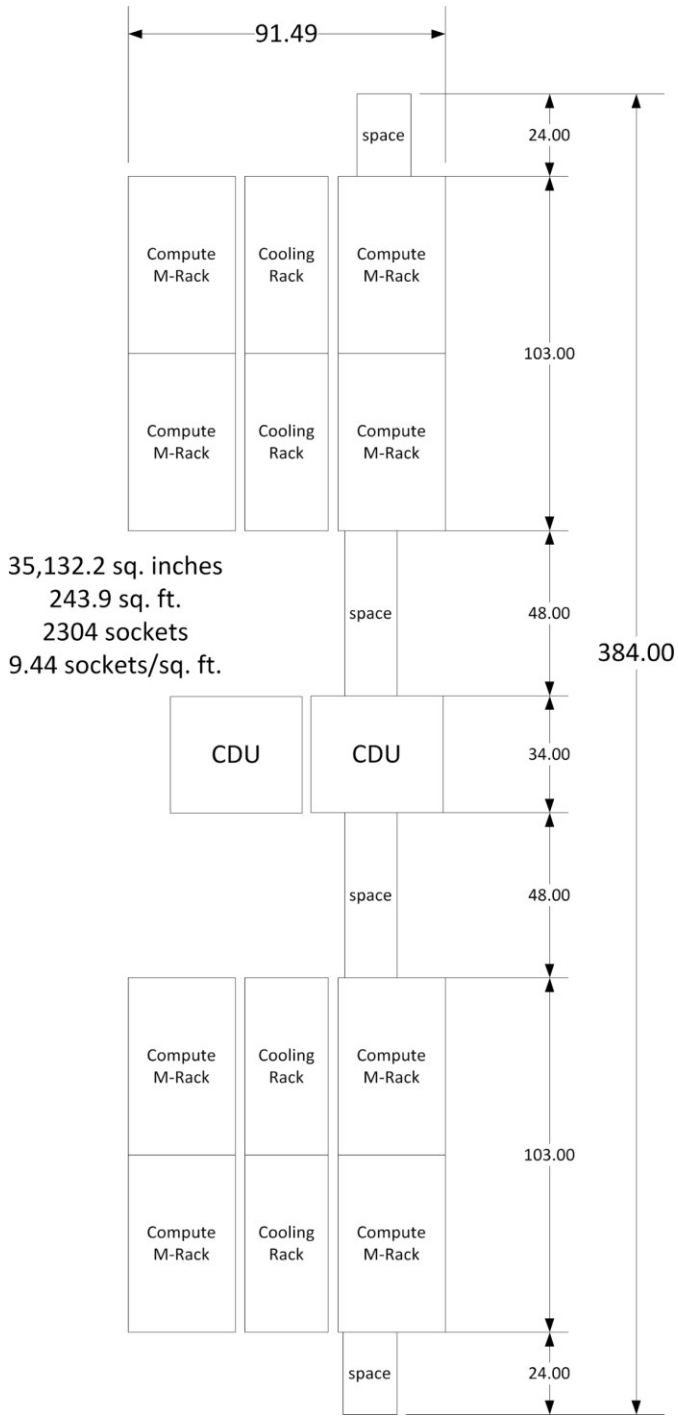

Figure 6.11-1: Base Case SGI ICE X M-Cell Maximum Density Layout

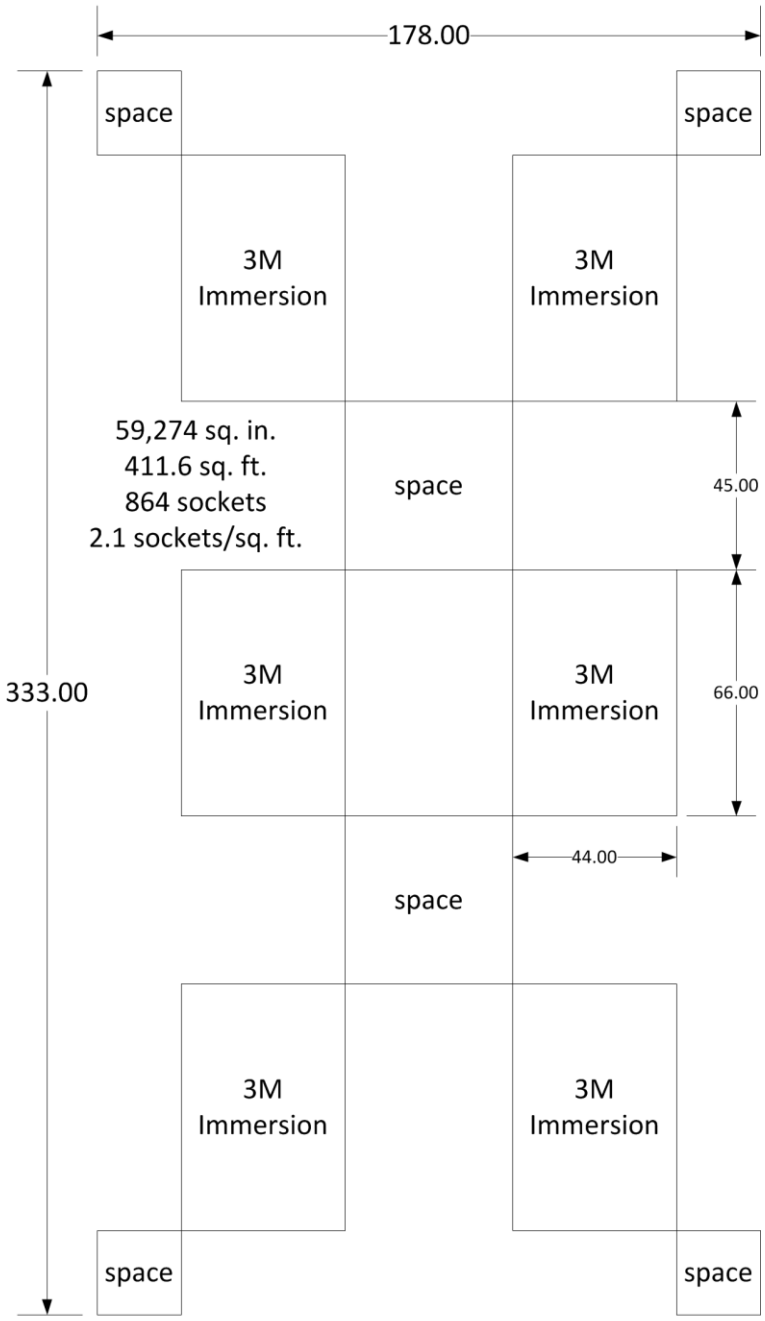

Figure 6.11-2: Immersion Case Layout Using Demonstrated Dimensions

6.12 SYSTEM MAINTENANCE (QUALITATIVE) [PO12]

Metric: Number of IT equipment maintenance requests for the Immersion Case compared to the Base Case model

Goal: Maintenance (labor and spares costs) required not considered as a significant hindrance to adoption of this technology

Stretch Goal: Maintenance required not greater than SGI hardware cooled by SGI's commercial hybrid cooling

We anticipated that the maintenance requests for immersion-cooled IT equipment would be more frequent compared to the Base Case.

In spite of anticipating a higher number of maintenance requests, the goal was that the maintenance would not pose a significant hindrance to adopting the immersion cooling technology. The stretch goal was for the maintenance request frequency to be similar to the Base Case type of IT equipment.

A high number of unexpected power supply and logic board failures occurred soon after starting the demonstration. The resulting quantity of opened maintenance cases for the Immersion Case were much higher than for the Base Case (Table 6.12-1). The IT equipment used for this immersion demonstration had more than 66 times more maintenance cases opened than the average for similar IT equipment. Neither the goal nor the stretch goal for this performance objective was met.

The cause of the power supply failures was determined and a subsequent fix was successfully applied. Although considerable resources were assigned to correct the cause or causes of the logic-board failures, the efforts were unsuccessful. A large number of metallic filaments "tin whiskers" were observed on failed boards. Although the exact mechanism for creating these tin whiskers is unresolved, they are suspected of creating shorts on the logic boards. Identifying the root cause(s) and a solution for the logic board failures could require considerable resources.

Table 6.12-1: Immersion Case and Base Case Maintenance Frequency

Equipment Description	Number of Cases Opened	Service Hours	Parts Requested
NRL Immersion Case (over 7 months)	62	235	30
Worldwide Average for 144 Socket Systems (last 12 months)	1.6	5.6	1.5
Percent Increase	6,643%	4,096%	1,900%

7.0 COST ASSESSMENT

The demonstrated OBI cooling technology contains a number of additional unique costs compared to deploying traditional air-cooled IT equipment. The major unique costs include those for the Novec 649 liquid and a custom bath enclosure.

However, two-phase immersion cooling can provide opportunities to lower particular first and operational costs that may offset some of the unique additional costs. Two-phase immersion cooling can be supported with warm-water cooling. Depending on the climate and whether or not the installation is part of building a new data center or is part of an IT equipment update, there may be an opportunity to avoid or reduce the first and operational costs associated with compressor-based cooling equipment.

As mentioned previously, the cooling water temperature needed to support two-phase OBI cooling can be significantly higher than is typically found in the DoD's high-performance computing data center buildings. This reduces costs because low-first cost infrastructure technologies such as dry coolers can be used, rather than high-first cost technologies such as chillers. In most climates, a dry cooler or a cooling tower dedicated to immersion cooling is adequate to provide the cooling water without a chiller. Selecting immersion-cooled IT equipment may save a considerable first cost funds if compressor-based cooling systems can be avoided or downsized.

7.1 COST MODEL

Table 7-1 contains cost elements from the demonstration and estimates for Bath and System Maintenance, Hardware Failures, and Operator Training.

Table 7-1: Cost Elements

Item	Cost Element	Information Tracked During the Demonstration	Estimated Costs
1	Bath Enclosure	cost of bath enclosure	$91,000
2	Bath and Systems Installation	piping, cooling, electrical, sensors, and data collection installation costs and estimates	$100,000
3	3M Novec 649 Liquid	amount of liquid used for initial fill and liquid lost from 10/2014 to 8/2015	$44,550+ $6,525
4	Bath and System Maintenance	estimates	$400/yr.
5	Hardware Failures	glass top lid cracked	$500/yr.
6	Operator Training	estimates	Initially 60 hrs. ($3,000), Yearly 8 hrs. ($400)

Bath Enclosure

The bath assembly is the primary device needed to implement this technology. It provides the containment for the immersion liquid, space for the IT equipment, and controls. The Technology Readiness Level (TRL) is a common gauge of how far along the technology is in its development cycle. It is estimated to be at Level 7, which means a system prototype has been demonstrated in an operational environment. The bath enclosure, purchased from 3M, cost $91,000. The future cost per bath will depend on the final design and manufacturing batch sizes.

Bath and Systems Installation

The plumbing, pump, and dry cooler costs are relevant to the demonstration set-up only, and should not be used to estimate the costs where a larger number of immersion baths will be deployed. The piping and main cooling system elements were installed by a plumbing contractor hired by NRL. The fee paid to the contractor was $50,000. The pump and dry cooler were donated to the project by Schneider Electric and were estimated to be worth $30,000. Because each data center is different, the costs of piping and cooling infrastructure should be estimated by a mechanical contractor on a case-by case basis.

The costs to deploy this technology for a given amount of IT performance is likely to be more expensive than a conventional system, due to the unique bath enclosure and the liquid costs associated with filling the bath. There will be some additional costs if a Novec 649 vapor level monitoring system is required. The demonstration used a new Bacharach HGM-MZ-4 multi-channel vapor sensing monitor costing $5,845.

3M Novec 649 Liquid

The Novec 649 immersion liquid is at the heart of the two-phase cooling technology. This engineered low-temperature boiling point liquid costs $75 per liter (~$290 per gallon) at the time of this report. The costs of the liquid is split into two categories: initial fill and operational losses.

Initial Fill

The approximate amount of Novec 649 liquid for the initial fill was 6 "barrels." Each barrel is filled with 99 liters (at 20°C). Therefore the cost of the initial fill is estimated to be $44,550. It is expected that the amount of Novec 649 needed for the initial fill will be reduced when the IT hardware design has been optimized for two-phase immersion cooling.

Operational Loss

The amount of Novec 649 lost during the demonstration was estimated to be 86.94 liters with a cost of $6,520. This loss was more than expected. Potential reasons for the unexpected loss are discussed in Section 6.7.

Bath and System Maintenance

There are a number of systems and components that were part of the immersion bath that was not present in the Base Case support systems and not found on conventional computer racks housing air-cooled IT equipment. These unique systems are described in Section 5.3, under Immersion Tank Systems and Components. A number of these systems and components need periodic monitoring and maintenance. Because the demonstration did not proceed as planned, data on regular periodic part replacement is not available. A couple of the systems and components would need periodic, possibly monthly, maintenance. These systems are described below.

Humidity Control

The humidity control system (labeled "7: desiccant") in Figure 5-6 has a cartridge that would need replacement periodically. The cost of each cartridge is estimated to be $100. In addition, the labor cost for monitoring and changing the cartridge may need to be considered.

Liquid Filtering and Conditioning

A carbon filter with a circulation pump was included to remove debris that might be created in the bath or introduced from the outside.

Perfluoropropionic acid (PFPA) can form when water comes in contact with Novec 649. Tests performed by 3M during the demonstration indicated that controlling the acid levels in Novec 649 is more important than originally thought. Since the acid levels can be

controlled using a filter containing silica gel, such a filter was added. Both the carbon and silica gel filters need to be changed periodically.

Hardware Failures

The bath containment structure was a welded stainless steel tank. Other than a hidden defect in the weldment, the basic structure should last indefinitely. No failures of the bath structure occurred during the demonstration project. However, there were two failures of the glass top cover likely caused by uneven tightening of the fasteners.

There are a number of components that would need replacement over time. These components include fans (humidity control, vapor recovery, and auxiliary cooling systems), one or two pumps for the liquid conditioning and acid neutralizing system (if equipped), and modulated and passive valves (main condenser water flow control, vent-in and vent-out systems, and lid seal inflation control). Servicing or replacing these components should not be difficult for data center technicians if they are provided with the needed training and materials. Although an immersion bath has more components than a standard data center rack, there is no reason for a limited overall life, because the components that wear overtime are replaceable. Failures of fans, valves, or seal system were not observed during the demonstration. IT hardware is typically replaced every three to five years with models that have higher performance. If the new IT hardware is not compatible with an existing immersion bath system, a different bath would be needed.

Operator Training

The demonstrated immersion cooling equipment has systems that are part of each tank (Figure 5-4). Data center technicians will not initially be familiar with these components and systems. It is expected that the technicians require a considerable amount of training on the theory of operation, electronic or physical monitoring, and maintenance for the systems that need periodic adjustment or are prone to failures. In addition, training will be required for procedures involving the removal and reinstallation of IT equipment because this involves operation of the lid sealing system and auxiliary condenser system. The demonstration did not reach the mode of normal production and therefore data on training hours are not available. The research team estimates that the initial amount of training would be one to two weeks ($3,000) with a few-day refresher course yearly ($400). One technician can care for multiple baths, but the exact number was not established.

7.2 COST DRIVERS

There are a number of cost considerations that should be evaluated when comparing the immersion cooling technology with Novec 649 liquid to other cooling technologies. These considerations can be divided into two categories: first costs and operational costs.

First Costs

Bath Structure, Liquid, and Attached Systems

The structure directly containing the IT equipment on the data center floor has a number of subsystems and special requirements that make the total containment system considerably more expensive than a typical data center vertical rack and more expensive than the systems that come with the Base Case configuration.

The bath needs to be filled with Novec 649 to completely immerse the IT equipment. The liquid is much more expensive ($75/liter) compared to cooling liquids typically found in data centers, as mentioned previously (air is free). The demonstration bath initial fill volume was approximately 595 liters. The retail cost at the time of this report was $75/liter and the cost of the initial fill was approximately $44,625. Lower operational costs may mitigate the high cost of the coolant.

Floor Space Density

The maximum power density of IT equipment per unit floor area inside a data center may be considerably different for the demonstrated immersion cooling solution compared to other cooling technologies. One key limiting factor for immersion cooling is the fact that the baths are horizontal rather than vertical. A horizontal orientation will disqualify a significant volume of the data center.

Operational Costs

Lower Cooling System Energy Use

An immersion cooling implementation can be used in a new data center or as part of upgrading or retrofitting an existing data center. The temperature of the water needed to support immersion cooling is typically much higher than that needed for cooling infrastructures commonly found in DoD data centers. The cooling water can be produced by using very efficient processes such as dry cooling or water-side economization, thereby avoiding the first costs associated with installing or adding compressor-based cooling capacity.

The demonstrated two-phase cooling technology can provide significant cooling energy savings, depending on the cooling infrastructure design and climate. The overall energy savings obtained from modeling the energy use was 19 percent compared to the Base Case. More information is available in Section 6.2.

Liquid Loss

During the operating period from October 2014 to March 2015, a significant amount of liquid was unaccounted for. Even though the headspace (Figure 2-1) contains a layer of air at the top, apparently a significant amount of Novec 649 vapor escapes through the lid seal or over the edge of the tank during periods when the lid is removed The mechanisms of liquid and vapor loss were not investigated in detail. Future research should investigate and quantify Novec 649 liquid loss after the tank is initially filled and during normal operation and maintenance of IT equipment. The cost of Novec 649 liquid lost during the demonstration was significant compared to the cost of the electrical energy needed for operating the IT equipment (a metric used for quantifying Performance Objective 7). Liquid loss cost analysis details are included as part of evaluating this performance objective in Section 6.7 above.

Tank Systems Maintenance

There were a number of systems included with the bath in this demonstration (Figure 5-4, Section 5.2.3). Some of these systems, such as the venting and vapor recovery, might be candidates for centralization, thereby reducing both first and operational costs. However, other systems may not be able to be centralized; for example, moisture control (desiccant filter) and liquid contamination control (carbon or silica gel filter). During the project we did not encounter failures of any of these systems.

Systems associated with the Base Case configuration contained fans, pumps, and other devices that would also eventually need maintenance. There was little evidence, other than the cracked glass lid, that the immersion bath and its systems would require more maintenance than the Base Case.

7.3 COST ANALYSIS AND COMPARISON

A seven-year life cycle cost comparison was made using the NIST building life cycle cost calculator as part of obtaining results for Performance Objective 8, System Economics. Results and additional information are provided in Section 6.8.

The cost comparison required a decision between replacing IT equipment ready for retirement with IT equipment designed for Base Case cooling technology or IT equipment designed for OBI immersion cooling.

Many of the costs used for the life cycle analysis were based on costs incurred or results obtained as part of the demonstration. Continued bath design development and materials obtained in production quantities should substantially lower the first costs and operational cost (liquid loss). There were no attempts to estimate future costs.

8.0 IMPLEMENTATION ISSUES

8.1 REGULATIONS

3M Novec 649 liquid has a very low GWP of 1, which is the same as carbon dioxide (CO_2). Novec 649 liquid is also sold as Novec 1230, which is a fire suppression chemical used in many data centers. There are no known regulations, special permits, or air-shipment restrictions associated with either Novec 649 or Novec 1230.

8.2 END-USER CONCERNS AND DECISION-MAKING FACTORS

The Naval Research Laboratory end user had a number of safety and operational concerns. These concerns are listed in the details for Performance Objective 10 in Section 6.10.

8.3 ELECTRONICS FAILURES

Failures of immersion-cooled electronics were the primary operational concern. The failures were divided into two groups: (1) power supplies and (2) logic boards. The failures occurred in both groups after short periods of operation in the immersion cooling bath.

Power supply failures were caused by shorting across the leads of certain field effect transistors (FETs) (Figure 8-1).

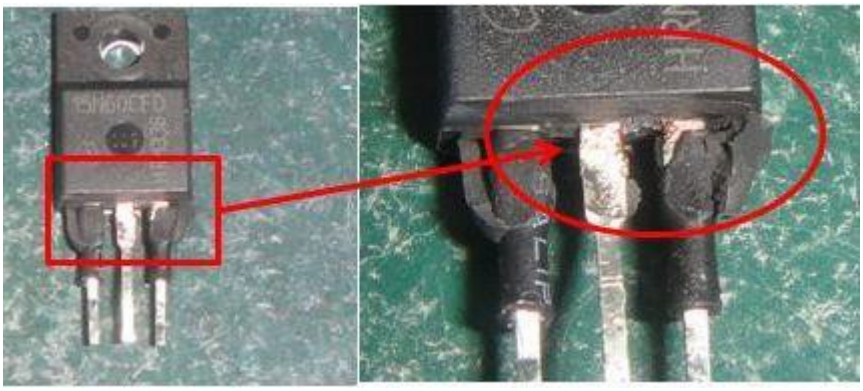

Figure 8-1: Failed Power Supply FET (courtesy of Delta Electronics)

The power supply failures appeared to be caused, in part, by accumulations of contaminants absorbed into the Novec 649 liquid from the immersed electronic equipment, namely the oils contained in wire or wire harness sleeving. These accumulations (Figure 8-2), which by themselves may not be conductive, may form a “base” structure where electrically conductive debris (for example, “whiskers”) or chemicals accumulate, forming electrically conductive paths

resulting in component or electronic assembly failure.

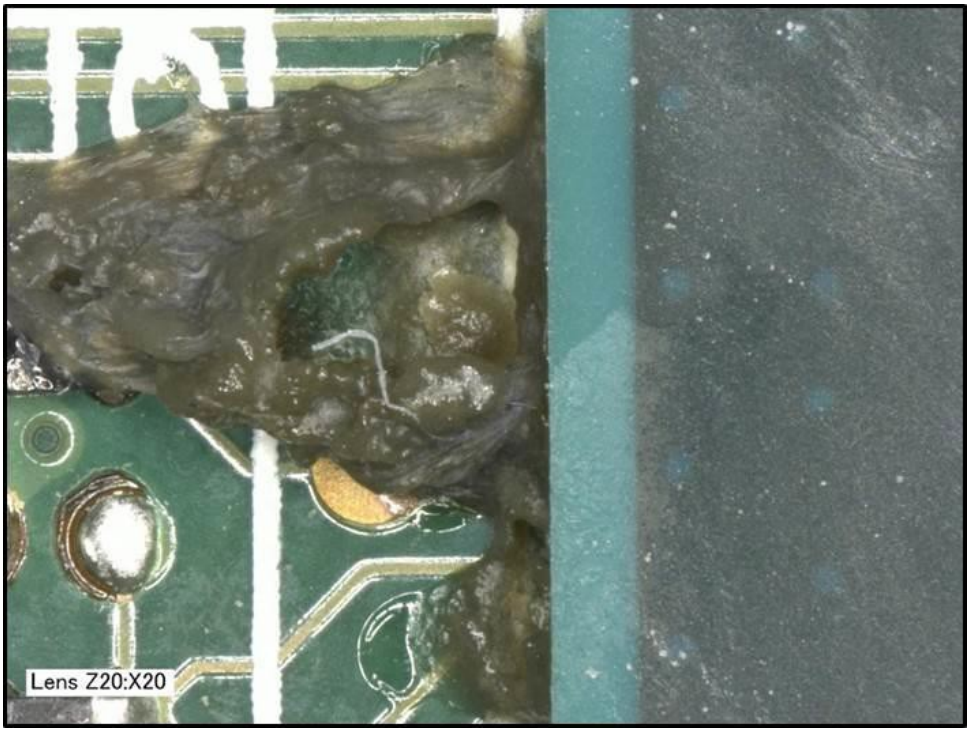

Figure 8-2: "Goop" With Whisker (courtesy of 3M)

The whisker-like objects were also observed (Figure 8-3) in and near the structures assumed to be the cause of shorting.

Element analysis of these objects resulted in finding them to be composed primarily of metals, including tin (Sn) (26 percent) and Aluminum (Al) (42 percent).

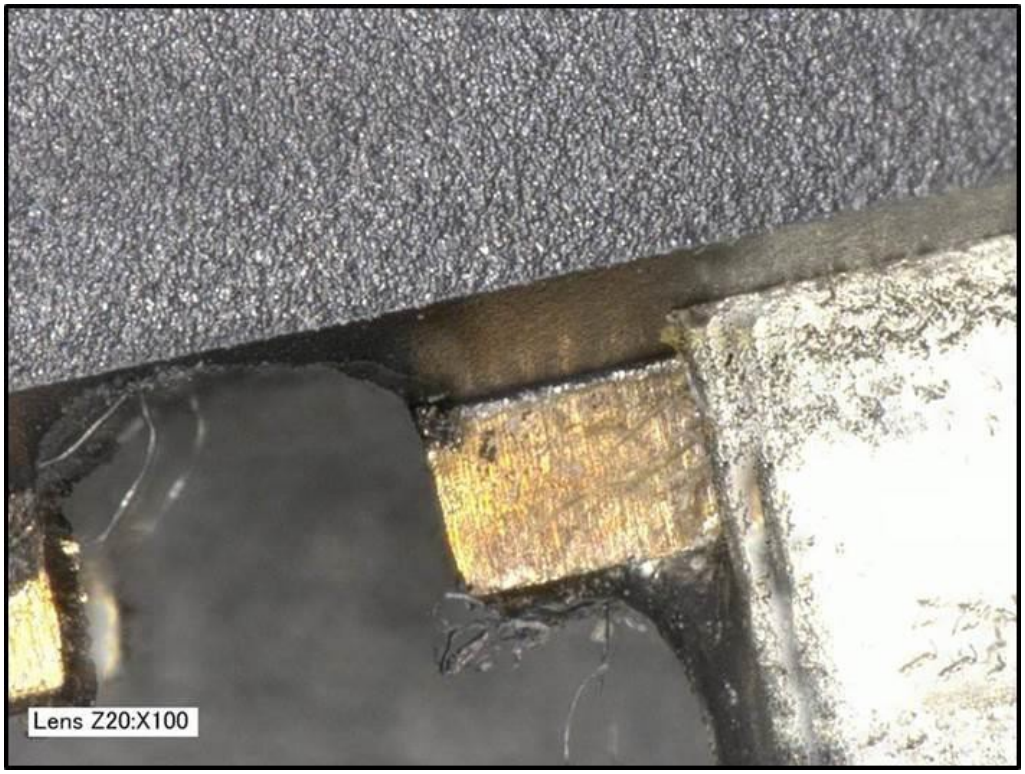

Figure 8-3: Metallic Whiskers (courtesy 3M)

Repair and prevention treatment processes were developed, and failed power supplies were repaired and treated. All remaining power supplies received the preventative treatment and were returned to the immersion cooling demonstration. Subsequent power supply failures were not observed.

The power supply repair and treatment process started with removing damaged parts, cleaning the area, installing new parts with any encapsulation (around the component pins) removed, and applying a sealant to prevent Novec 649 from coming into contact with the hot components in confined areas. Encapsulation was removed to avoid creating hidden boiling locations under the encapsulation. In addition, a boiling enhancement coating was applied to large, flat surfaces of hot components to encourage boiling where contamination could not accumulate.

The logic board failures occurred later in the demonstration compared to the power supply failures. The apparent cause or causes of these failures were not as apparent compared to the cause of the power supply failures. Metallic whiskers assumed to collect under electronic components that have a high number of contact points in common with the printed wiring board.

The failures could not be traced to an exact root cause. The current understanding is that a combination of contamination, including “goop”, acid, and whiskers, caused undesirable

electrical connections resulting in failures. The failures resulted in permanent component damage (restart attempts were unsuccessful) for 58 of the 72 nodes. Failed boards were replaced until the spares were exhausted. Fourteen (14) logic boards (nodes) continued to operate throughout the demonstration period.

8.4 PERFLUOROISOBUTYLENE (PFIB) EXPOSURE

The SDS for Novec 649 states, "If the product is exposed to extreme condition of heat from misuse or equipment failure, toxic decomposition products that include hydrogen fluoride and perfluoroisobutylene (PFIB) can occur." (SDS 2015a).

As part of the demonstration, a worst-case analysis was performed to estimate the amount of PFIB vapor that may be formed if an electric arc event occurred. A 3M analysis concluded that there was very little danger of significant PFIB exposure during the demonstration. However, it is recommended that site safety personnel consult with appropriate experts to evaluate the potential risk in each and every application.

8.5 LIQUID LOSS

The quantity of Novec 649 liquid lost during the demonstration was significant, as was reported in Section 3 under Performance Objective 7. Losing the expensive liquid was a serious cost concern. Additionally, an inventory of make-up liquid was required at all times to prevent automatic shutdown of the electronic equipment. The demonstration bath had a Novec 649 liquid level sensor that was programmed to cut the power to the immersion-cooled electronics if the liquid level fell below the highest point of the equipment. The cause or causes of the liquid loss should be understood and addressed to reduce the loss to an acceptable rate.

8.6 SERVICE VISIBILITY

The boiling of Novec 649 can produce a significant amount of vapor bubbles, especially when the IT equipment power level is high. Indicator lights are often part of electronic equipment designs. Personnel at NRL reported that the poor visibility caused by the bubbles was hindering equipment monitoring, including the inability to read the indicator lights. IT equipment designed specifically for two-phase immersion cooling should have the indicator lights located so that they are always visible to the service personnel.

8.7 USE OF GLOVES FOR SERVICE

Personnel at NRL reported that using rubber gloves while reaching into the liquid to perform service work was desirable from a perceived safety and comfort point of view compared to using bare hands. Dexterity required for certain service work was reported to be difficult when using the gloves. Personnel elected to perform service without gloves although it dried out their skin. However, this is not a recommended practice.

8.8 LID DURABILITY

The removable glass lid covering the top of the bath was difficult to handle because of its size and weight. The lid cracked twice during the demonstration. Future bath enclosures should use an improved design that address these issues.

8.9 PROCUREMENT ISSUES

The bath enclosure design and fabrication methods were not mature enough for high-volume production, making the bath enclosures expensive and delivery times unpredictable.

9.0 REFERENCES

Allied Control. 2013. "Immersion-2 Rack Platform for 3M™ Novec™ Engineered Fluid brings Ultra High Density to HPC Supercomputing and Cuts Cooling Energy by 95%." Press Release, Hong Kong, November 18, 2013. (Contact: Pascal Clarysse)

Allied Control. 2015. "Immersion-2: Immersion Cooling Platform for 3M Novec Engineered Fluid." http://www.allied-control.com/immersion-2. Last accessed November 6, 2015.

Chan, Benson et al. 2010. "Performance of Passive 2-Phase Immersion Cooling of Server Hardware." IMAPS Workshop, Palo Alto, California. September 28–30.

Coles, Henry C., 2014. "Demonstration of Rack-Mounted Computer Equipment Cooling Solutions." Lawrence Berkeley National Laboratory. Report Number LBNL-6659E.

Coles, Henry C., and Steve E. Greenberg. 2014. "Direct Liquid Cooling for Electronic Equipment." Lawrence Berkeley National Laboratory. Report Number LBNL-6641E.

EPA (U.S. Environmental Protection Agency). 2015. EPC Greenhouse Gas Calculator. http://www2.epa.gov/energy/greenhouse-gas-equivalencies-calculator. Last accessed November 2, 2015.

EXTOLL. 2015. GreenICE. http://www.extoll.de/products/green-ice. Last accessed November 6, 2015.

Kampl, Alex. 2014. "Bitcoin 2-Phase Immersion Cooling and the Implications for High Performance Computing." *Electronics Cooling*. February 2014. http://www.electronics-cooling.com/2014/02/bitcoin-2-phase-immersion-cooling-and-the-implications-for-high-performance-computing/.

Polzer, S., and B. Gilbert. 2012. "Passive Open Bath Immersion Cooling High Performance Computing (HPC) Test Platform." Mayo Clinic. IMAPs Advanced Thermal Workshop. Los Gatos, California. November 12–14.

SDS (Safety Data Sheet). 2015a. Safety Data Sheet for Novec 649, dated November 2, 2015. http://www.3m.com/3M/en_US/company-us/SDS-search/results/?gsaAction=msdsSRA&msdsLocale=en_US&co=ptn&q=649. Last accessed November 6, 2015.

SDS (Safety Data Sheet). 2015b. Safety Data Sheet for Novec 7100, dated March 19, 2015. http://www.3m.com/3M/en_US/company-us/SDS-search/results/?gsaAction=msdsSRA&msdsLocale=en_US&co=ptn&q=7100. Last accessed November 6, 2015.

The Green Grid, 2015. www.thegreengrid.org.

Tuma, Phillip E. 2010. "The Merits of Open Bath Immersion Cooling of Datacom Equipment." 3M. 26th IEEE SEMI-THERM Symposium. February 23–25, 2010. San Jose, California.

Tuma, Phillip E. 2011. "Design Considerations Relating to Non-Thermal Aspects of Passive 2-Phase Immersion Cooling." 27th IEEE SEMI-THERM Symposium. San Jose, California. March 20–24, 2011.

APPENDICES
Appendix A: Points of Contact

POINT OF CONTACT Name	ORGANIZATION Name Address	Phone Fax E-mail	Role in Project
Katelyn Rydberg	Naval Facilities Engineering and Expeditionary Warfare Center	katelyn.rydberg@navy.mil	Technical Advisor
Vern Novstrup	Naval Facilities Engineering and Expeditionary Warfare Center	vern.novstrup@navy.mil	Technical Advisor
Dr. Magnus Herrlin	Lawrence Berkeley National Laboratory	mkherrlin@lbl.gov	Principal Investigator
Bill Tschudi	Lawrence Berkeley National Laboratory	Retired	Principal Investigator
Henry Coles	Lawrence Berkeley National Laboratory Address*	hccoles@lbl.gov	Technical Lead
Dr. Jeanie Osburn	Naval Research Laboratory	Retired	Project Lead
Dr. Sergio Tafur	Naval Research Laboratory	sergio.tafur@nrl.navy.mil	Project Lead
Phil Tuma	3M Corporation	petuma@3M.com	Project Lead
Ozan Tutunoglu	Schneider-Electric	ozan.tutunoglu@schneider-electric.com	Project Lead
John Bean	Schneider-Electric	john.bean@schneider-electric.com	Management Support
Tim McCann	SGI	tmccann@sgi.com	Project Lead

Appendix B: Instrument Calibration

Liquid Level Sensor

The liquid level was used to determine the Novec 649 liquid loss during the evaluation period. The instrument was a magnetic-switch type model Omega LVR-524 Liquid Level Sensor. The translated output (Figure 6.7-1, top graph) from the sensor was recorded in the database.

The correspondence between the database values (counts) and the actual liquid level (inches) was confirmed, and the liquid volume changes as a function of liquid level were estimated.

Magnetic-switch type level sensors do not provide a continuous output as a function of float height. The output is a series of "steps" corresponding to the activation of a linear arrangement of magnetic switches. These steps are seen in the top graph of Figure 6.7-1.

The documentation for the Omega LVR-524 indicated that the active range for the sensor is 21.37 inches (542.8 millimeters [mm]). The sensor output was 4-20 milliamps [mA]. This output was translated linearly to a value between 0–4096 (referred to as a *count*) and placed in the database. The translation (database value to liquid height change) based on documentation was therefore 0.005217 inches (0.1325 mm) for a single count, or 191.67 counts per inch.

The process described below was performed to confirm the translation (191.67 counts/inch). Confirming the count/inch was accomplished in three steps. Given that if the count/liter and liters/inch can be determined experimentally, the count/inch and other relationships (Table B-2) can be estimated using equation B-1.

(liters/inch) x (count change/liter) = count change/inch (Eq. B-1)

Step 1: Experimentally estimate the bath liters per height change. Measure the tank dimensions to estimate the liquid surface area. Two NRL technicians provided measurements that estimated the area of the liquid surface. The data and results (effective surface area = 0.871 m^2) are in Table B-1.

Step 2: Experimentally estimate the count change as a function of liquid added. A known volume of liquid was added to the bath in three consecutive and equal amounts (10.64 liters) while the IT equipment power was off and the liquid was at room temperature. The change in database values were observed. Table B-1 shows the data and results.

Step 3: Combine results to obtain an estimate of count change per height change. Combine the information from Step 1 and 2. Liters per inch (22.12) multiplied by counts per inch (8.68) = 192 (count/inch).

The experimental results (192 counts/inch) are close to the instrument documentation information (191.7 counts/inch). The value of 192 counts/inch was used for converting the level measurements into liquid volume changes.

The resulting estimate of 8.68 count/liter (Table B-2) was used to calculate the volume of liquid needed to raise the liquid level from that found at the end of the liquid loss evaluation period to the level found at the beginning of the period.

Table B-1: Level Sensor Translation Experimental Data And Results

	Estimated Width (inches)	Estimated Length (inches)	Calculated Area (inches^2)	Estimated Area (m^2)	Volume/Height (m^3/m)	Volume/Height (liters/mm)	Volume/Height (liters/inch)
Tech 1	39	32	1248.0	0.805	0.805	0.805	20.45
Tech 2	39.25	37	1452.3	0.937	0.937	0.937	23.80
Average	39.125	34.5	1350.1	0.871	0.871	0.871	22.12

	Date/Time	Data (count)	Data (count)	Data Delta (count)	Observed Rate (count/liter)
Add 10.64 Liters	9/2/2015 14:03	1649.7	1728	78.3	7.36
Add 10.64 Liters	9/2/2015 15:00	1728	1828	100	9.40
Add 10.64 Liters	9/2/2015 16:16	1828	1926.7	98.7	9.28
Average				92.33	8.68

Calculate (count/inch)
192.00

Table B-2: Liquid Level Related Conversions

Fluid Surface Area	0.871	m^2
Level Sensor Data Conversion	192	count/inch

Conversions

7559	count/m
7.56	count/mm
0.1323	mm/count
7559	count/871 liters
8.68	count/liter
871	liters/meter
0.871	liters/mm
22.12	liters/inch

Appendix C: Simulation Model and Simulation Details

Model Development

Two types of data center models were developed: One for a low-efficiency data center (used to model Base Case A and Immersion Cases 1A, 2A, and 3A), and one for a high-efficiency data center (used to model Base Case B and Immersion Cases 1B, 2B, and 3B). All these models use the same IT equipment. The differences are listed in Table C-1.

The Base Case models (A and B) assume the IT equipment is equipped with the commercially available SGI hybrid-cooling option.

The high-efficiency data center is equipped with high-efficiency chillers and uninterruptible power supply (UPS) systems. In addition, the high-efficiency data center is equipped with a water-side economizer (WSE) and has excellent air management inside the data hall. A water-side economizer allows the chiller to remain off when the cooling water can be supplied at the required temperature using only the cooling tower. This feature provides significant energy savings in many climates.

The low-efficiency data center is equipped with low-efficiency chillers and UPS systems and does not include a WSE. The comparisons for Performance Objectives 1, 2, 6, and 8 used the simulation results from the low-efficiency data center when comparing the Base Case (hybrid cooling) and Immersion Cooling. The simulation results of the high-efficiency data center contrasted with the simulation results of the low-efficiency data center. The PUE results using a high-efficiency data center were 1.216 for Base Case B and 1.146 for Immersion Case 3B. These data result in a 6 percent savings on the total data center energy compared to 19 percent for the low-efficiency data center.

Table C-1: Low- and High-Efficiency Data Center Differences

	Data Center Efficiency	
	Low	High
Cooling Tower/Chiller Configuration	no water-side economizer	water-side economizer
Chiller	RC Group W.NRM.2760 V4	McQuay DWSC100M
UPS	MGE Galaxy 7000	Symmetra MW

Both the low- and high-efficiency data centers have a cooling tower that supplies cool water to chillers for the whole data center (see Table C-1). However, for the heat rejection for immersion

simulations A3 and B3 (Table 6.1-1) a dedicated cooling tower was added to cool the immersion baths.

For each of the two base models (high and low efficiency), three scenarios were modeled to explore the energy use if the same Base Case IT equipment was cooled using the demonstrated immersion cooling technology. The first scenario sets (1A and 1B) assume the immersion cooling bath condensers are connected to the existing chilled-water cooling loop. Many HPC data centers have cooling water available overhead or under the raised floor. Therefore, this option has a relatively low cost.

The second scenario set (2A and 2B) assumes that dry coolers with an adiabatic option are added outside the data center hall to supply cooling water to the immersion bath condensers. The adiabatic function (water sprayed on heat exchanger surfaces) is used for very hot ambient conditions.

The third scenario set (3A and 3B) assumes that a cooling tower is added outside of the data center to supply the cooling water to the immersion baths. Cooling towers can economically supply a large amount of cooling in a small space but need a considerable amount of water for evaporation. The cooling tower option may not be a good choice in a location that has high water cost or shortages.

The model used a data center designed for a maximum IT load of 2 MW. The actual load used in the model assumed that the IT load was 80 percent of the maximum. The model assumed that 20 percent of the IT equipment was air cooled and not be part of the retrofit. The power for the air-cooled IT equipment that stays in place was therefore 321 kW, with 1,275 kW for the IT equipment being exchanged during the retrofit.

Performance Objectives 1, 2, 6, and 8 were evaluated by using two of the scenarios above only:

- **Base Case A**: SGI ICE X Model IT equipment equipped with the SGI hybrid cooling option installed in a low-efficiency data center

- **Immersion Case 3A**: The same SGI ICE X Model IT equipment modeled in the Base Case A, but cooled using the demonstrated two-phase immersion cooling. A cooling tower was added to provide cooling for all immersed IT equipment. This scenario was also modeled in the low-efficiency data center.

Eight Romonet models were developed, and the following eight Romonet software-generated energy flow diagrams are provided below (Figures C-1 through C-8). The red lines indicate heat energy flow. The blue lines indicate electrical energy flow. The boxes indicate enclosed

boundaries or rooms. The net energy flow into and out of each boundary is zero.

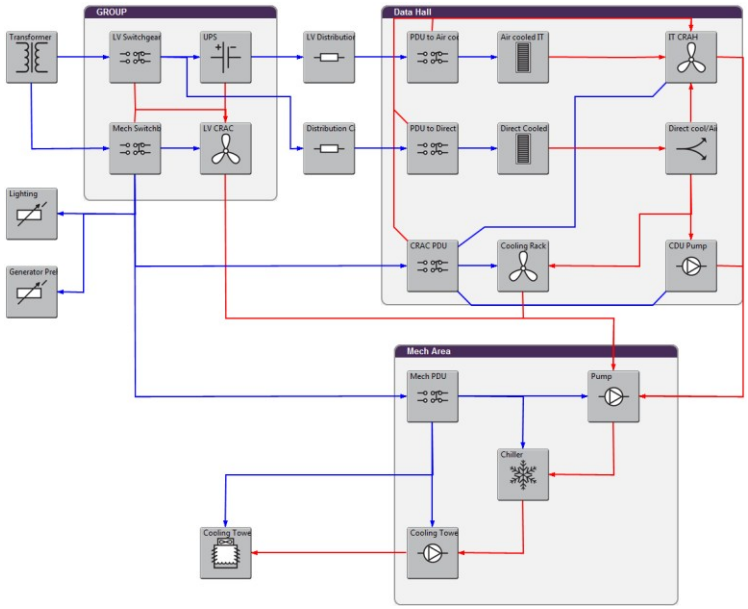

Figure C-1: Low-Efficiency Data Center - Base Case A

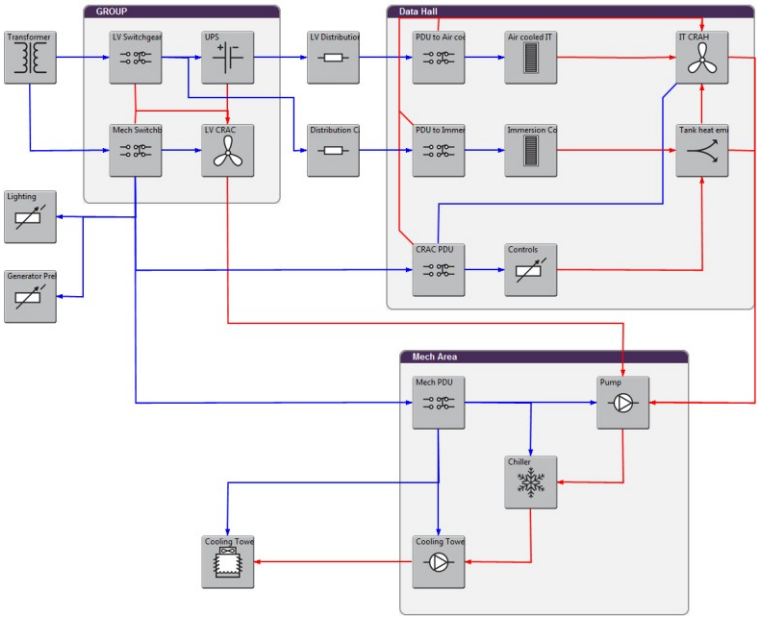

Figure C-2: Low-Efficiency Data Center - Immersion (1A) Cooling Uses Building Cooling Water

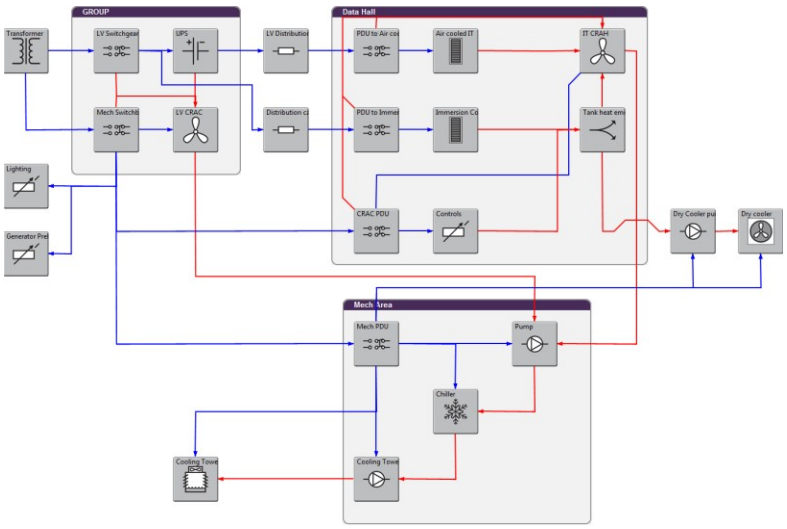

Figure C-3: Low-Efficiency Data Center - Immersion (2A) Cooling with Added Dry Cooler

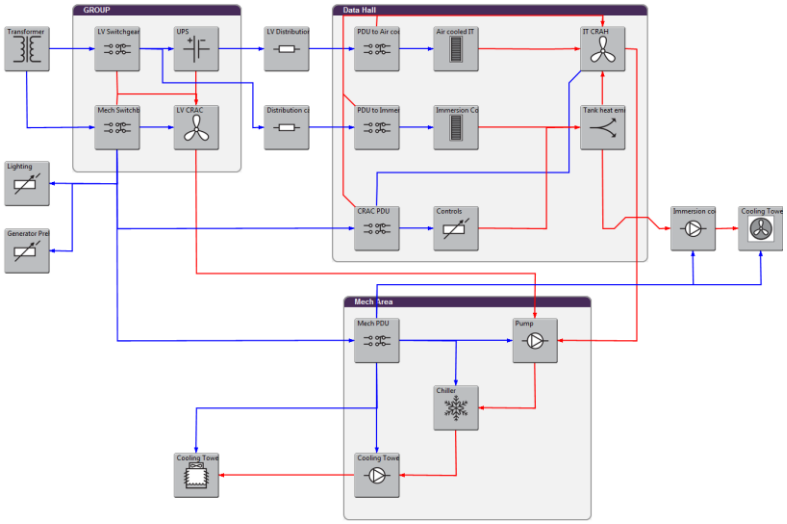

Figure C-4: Low-Efficiency Data Center - Immersion (3A) Cooling with Added Cooling Tower

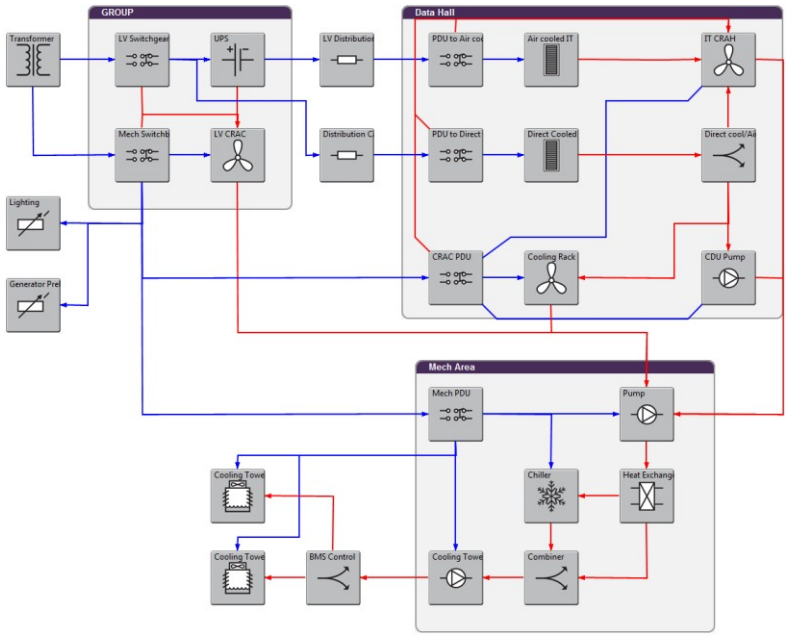

Figure C-5: High-Efficiency Data Center – Base Case B

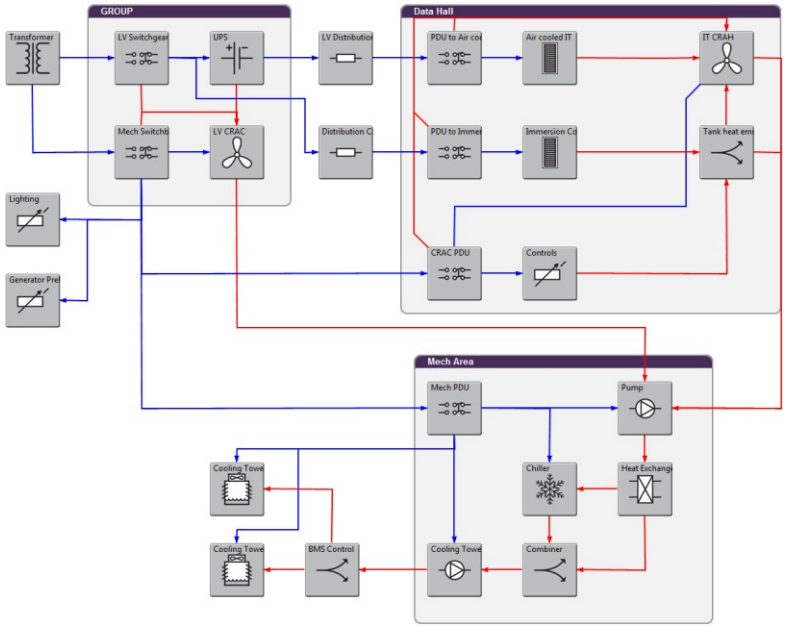

Figure C-6: High-Efficiency Data Center - Immersion (1B) Cooling with Building Cooling Water

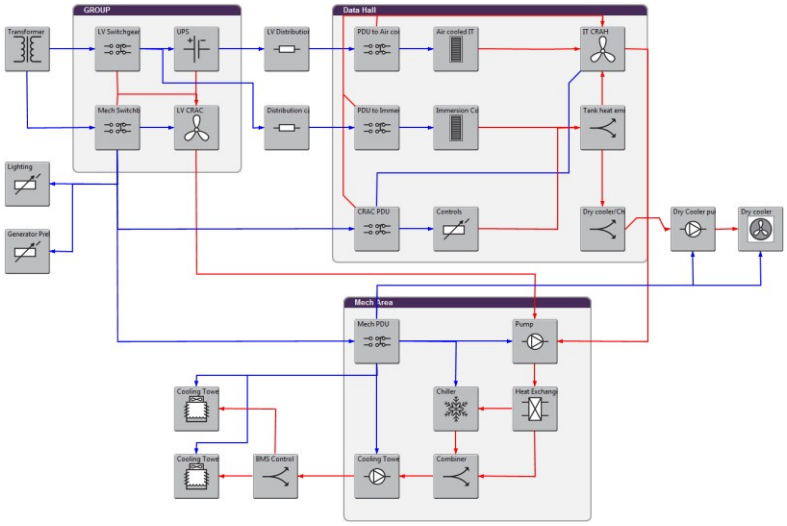

Figure C-7: High-Efficiency Data Center - Immersion (2B) Cooling with Added Dry Cooler

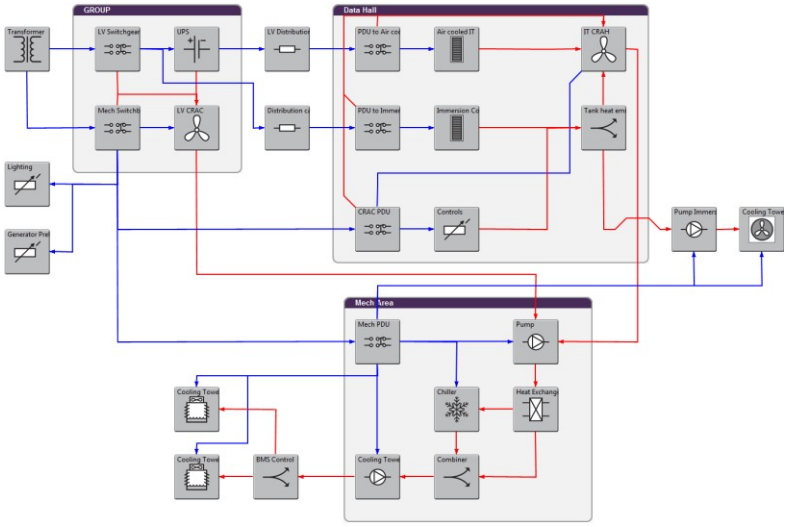

Figure C-8: High-Efficiency Data Center - Immersion (3B) Cooling with Added Cooling Tower

Table C-2: Modeling Results by Component

		Low Efficiency Data Center				High Efficiency Data Center			
		Basecase A	Immersion 1A	Immersion 2A	Immersion 3A	Basecase B	Immersion 1B	Immersion 2B	Immersion 3B
Inside Cooling	Mech Switchboard	0.876	0.812	0.541	0.536	0.560	0.541	0.517	0.510
	UPS LV CRAC	0.432	0.430	0.424	0.424	0.241	0.241	0.241	0.241
	SGI CDU Pump	21.7				21.7			
	Data Hall CRAC PDU	0.185	0.085	0.085	0.085	0.185	0.085	0.085	0.085
	Data Hall IT CRAH	19.61	13.63	13.63	13.63	19.62	13.63	13.63	13.63
	Immersion Controls		5.315	5.315	5.315		5.315	5.315	5.315
	SGI Cooling Rack	24.1				24.1			
IT	Air cooled IT	320.9	320.9	320.9	320.9	320.9	320.9	320.9	320.9
	Immersed IT		1275	1275	1275		1275	1275	1275
	Direct water cooled IT	1275				1275			
Other Infrastructure	UPS LV Switchgear	2.135	2.135	2.135	2.135	2.109	2.109	2.109	2.109
	UPS	25.73	25.73	25.73	25.73	11.65	11.65	11.65	11.65
	LV Distribution Cabling	0.943	0.943	0.943	0.943	0.943	0.943	0.943	0.943
	Distribution Cabling	4.964	4.964	4.964	4.964	4.964	4.964	4.964	4.964
	Lighting	50.14	50.14	50.14	50.14	50.14	50.14	50.14	50.14
	Generator Preheat	50.14	50.14	50.14	50.14	50.14	50.14	50.14	50.14
	Main Transformer	21.47	20.80	17.08	16.99	17.19	16.79	16.36	16.21
	PDU to Air cooled IT	0.626	0.626	0.626	0.626	0.626	0.626	0.626	0.626
	PDU to Direct Cooled IT	2.333				2.333			
	PDU to Immersion Cooled IT		2.333	2.333	2.333		2.333	2.333	2.333
Outside Cooling	Chiller	477.0	463.5	92.31	92.31	53.72	56.05	20.22	14.76
	Cooling Tower Pump	38.90	38.30	13.66	13.66	34.86	34.42	12.88	12.84
	Cooling Tower Summer	7.077	6.643	1.539	2.109	2.584	2.563	0.725	1.311
	Cooling Tower Winter					12.127	12.085	3.408	3.408
	Cooling Tower				0.957				
	Pump	34.198	33.667	12.718	12.718	34.052	33.493	12.635	12.635
	Mech PDU	1.105	1.150	0.393	0.381	0.409	0.409	0.350	0.336
	Dry Cooler pump			28.639				28.639	
	Dry cooler			12.526				12.526	
	Immersion cooled pumps				28.639				
	Added Cooling Tower								0.957
	Added Cooling Tower Pump								28.639
	Total Power	2380	2318	1932	1921	1941	1895	1847	1830
	Total Cooling Power	625	563	182	171	204	159	111	95
	Total IT Power	1596	1596	1596	1596	1596	1596	1596	1596
	Cooling pPUE	1.392	1.353	1.114	1.107	1.128	1.099	1.070	1.059
	PUE	1.491	1.452	1.210	1.203	1.216	1.187	1.157	1.146

Measurements from the demonstration indicate that very low total cooling energy can be achieved, including the infrastructure overhead for controls, pumping, and dry cooler fan power. Measurements were taken during the period from March 13 to April 8, 2015. The resulting lowest measured pPUE value is just below 1.02, shown on the bottom graph of Figure 6.1-3. In Table C-2, the lowest pPUE is 1.059, but this cooling energy includes inefficient cooling for 20 percent of the IT load.

Appendix D: Base Case Test Measurements

The net heat loss to the room during the Base Case test was needed as a model input for Base Case A and Base Case B because this heat affects the heat load to the computer room air handlers (CRAHs). Tables D-1 through D-3 contain the measurements, as well as the calculated results. All results are summarized in Table D-4, including the "Unaccounted Power."

The identifiers, e.g., "P1" in Table D-1, relate to the sampling points indicated on Figure 5-5.

The equation for the unaccounted heat is:

Unaccounted Power = Power In (electrical energy) - Power Out (Cooling Rack and CDU) (Eq. D-1)

Referring to Figure 5-5, the equation needed to determine unaccounted power is:

$$P7 = (P1 + P2 + P3) - (P6 + P5) \qquad \text{(Eq. D-2)}$$

Power In: P1, P2, and P3 are measured directly and totaled in Table D-1.
Power Out: P6 is rack air cooling by cooling rack (Table D-2).
Power Out: P5 is rack liquid cooling by CDU (Table D-3).

Table D-1: Base Case Test Energy Input

	Measurements			Calculated
Time	[P1] Cooling Rack Electrical (kW)	[P2] IT Equipment (kW)	[P3] CDU Pump Power (kW)	Electrical Power In P1+P2+P3 (kW)
11:00	2.06	28.5	3.2	33.7
11:04	2.08	28.5	3.2	33.8
11:08	2.05	28.5	3.2	33.7
11:12	2.02	28.4	3.2	33.7
11:16	2.04	28.4	3.2	33.7
11:20	2.04	28.3	3.2	33.6
11:24	2.06	28.4	3.2	33.7
11:28	2.05	28.4	3.2	33.7
11:32	2.05	28.3	3.2	33.5
11:36	2.01	28.3	3.2	33.5
11:40	2.02	28.2	3.2	33.4
11:44	2.00	28.4	3.2	33.6
11:48	2.02	28.8	3.2	34.0
11:52	2.02	28.4	3.2	33.7
11:56	2.03	28.2	3.2	33.5
12:00	2.04	28.4	3.2	33.6
12:04	2.01	28.1	3.3	33.4
Average	2.04	28.38	3.23	33.64

Table D-2 shows the measurements and calculations for determining the heat going to the building cooling system from the Cooling Rack (rack air cooling).

Table D-2: Base Case Cooling Rack (Rack Air Cooling) Measurements and Results

	Measurements				Calculated		
Time	[F2] Cooling Rack (CR) Flow Rate (gpm)	[T3] CR Supply Temp. (C)	[T4] C2 Return Temp. (C)	[T5] C1 Return Temp. (C)	C2 Heat Transfer (kW)	C1 Heat Transfer (kW)	[P6] C1+C2 Heat Transfer (kW)
11:00	24.4	20.0	20.0	21.0	0.00	3.22	3.22
11:04	24.3	20.0	20.0	21.0	0.00	3.21	3.21
11:08	23.6	21.0	20.0	21.0	-3.11	0.00	-3.11
11:12	24.4	21.0	20.0	21.0	-3.22	0.00	-3.22
11:16	24.4	21.0	20.0	21.0	-3.22	0.00	-3.22
11:20	24.6	21.0	21.0	22.0	0.00	3.24	3.24
11:24	24.4	20.0	20.0	21.0	0.00	3.22	3.22
11:28	24.8	20.0	20.0	21.0	0.00	3.27	3.27
11:32	24.6	20.0	20.0	21.0	0.00	3.25	3.25
11:36	24.2	19.0	19.0	21.0	0.00	6.39	6.39
11:40	24.4	19.0	19.0	21.0	0.00	6.45	6.45
11:44	22.9	19.0	19.0	20.0	0.00	3.02	3.02
11:48	24.5	19.0	19.0	20.0	0.00	3.23	3.23
11:52	24.2	19.0	19.0	21.0	0.00	6.39	6.39
11:56	24.6	19.0	20.0	21.0	3.24	6.48	9.72
12:00	24.5	20.0	20.0	21.0	0.00	3.23	3.23
12:04	24.3	20.0	20.0	21.0	0.00	3.21	3.21
Average	24.31	19.88	19.76	20.94	-0.37	3.40	3.03

Note: Negative values for heat transfer may be caused by the small number of significant digits available for temperature and/or calibration offsets.

Table D-3 shows the measurements and calculations for determining the heat going to the building cooling system from the CDU (rack liquid cooling).

Table D-3: Base Case CDU (Rack Liquid Cooling) Measurements and Results

	Measurements			Calculated	Measurment	Calculated
Time	[F1] CDU flow rate (gpm)	[T1] IT Equip. Supply (F)	[T2] IT Equip. Return (F)	[P4] IT Equipment Direct Cooling (kW)	[P3] CDU Pump Power (kW)	[P5] CDU Thermal to Building (kW)
11:00	68.9	68.6	71.2	26.2	3.20	29.4
11:04	68.9	68.8	71.4	26.3	3.23	29.5
11:08	68.9	68.8	71.4	26.3	3.23	29.5
11:12	68.9	68.4	70.6	22.2	3.23	25.4
11:16	68.9	68.0	70.6	26.2	3.24	29.5
11:20	68.8	67.6	70.2	26.2	3.24	29.5
11:24	68.8	67.2	70.0	28.2	3.24	31.5
11:28	68.8	67.0	69.6	26.2	3.23	29.5
11:32	68.8	66.8	69.2	24.2	3.22	27.4
11:36	68.8	66.6	68.8	22.2	3.23	25.4
11:40	68.9	66.4	68.8	24.2	3.22	27.4
11:44	68.8	66.2	68.6	24.2	3.22	27.4
11:48	68.8	66.2	68.4	22.2	3.22	25.4
11:52	68.8	66.4	68.8	24.2	3.21	27.4
11:56	68.8	66.8	69.2	24.2	3.23	27.4
12:00	68.9	67.2	69.4	22.2	3.24	25.4
12:04	68.8	67.4	70.0	26.2	3.25	29.5
Average	68.86	67.32	69.78	24.81	3.23	28.04

Table D-4 shows the results from Tables D-1 through D-3 and the calculated unaccounted power that will be cooled by the room air conditioning system.

Table D-4: Base Case Unaccounted Power

	Calculated			
Time	Electrical Power In P1+P2+P3 (kW)	[P6] C1+C2 Heat Transfer (kW)	[P5] CDU Thermal to Building (kW)	[P7] Unaccounted for Power (kW)
11:00	33.7	3.2	29.4	1.1
11:04	33.8	3.2	29.5	1.1
11:08	33.7	-3.1	29.5	7.4
11:12	33.7	-3.2	25.4	11.5
11:16	33.7	-3.2	29.5	7.4
11:20	33.6	3.2	29.5	0.9
11:24	33.7	3.2	31.5	-1.0
11:28	33.7	3.3	29.5	0.9
11:32	33.5	3.2	27.4	2.9
11:36	33.5	6.4	25.4	1.7
11:40	33.4	6.4	27.4	-0.4
11:44	33.6	3.0	27.4	3.2
11:48	34.0	3.2	25.4	5.3
11:52	33.7	6.4	27.4	-0.2
11:56	33.5	9.7	27.4	-3.7
12:00	33.6	3.2	25.4	5.0
12:04	33.4	3.2	29.5	0.7
Average	33.64	3.03	28.04	2.57