ENGINEERING SERVICE CENTER
Port Hueneme, California 93043-4370

CONTRACT REPORT
CR-05-003-ENV

FINAL REPORT - ER-0009
FIELD DEMONSTRATION AND VALIDATION OF A DISSOLVED HYDROGEN ANALYZER

by

Carmen A. Lebrón NFESC
Barbara Sugiyama NFESC
Patrick J. Evans, Ph.D.CDM
Mary Trute CDM
Roger Olsen, Ph.D. CDM
John Eisenbeis, Ph.D. CDM
Frank Chapelle, Ph.D. USGS

February 2005

Printed on recycled paper

REPORT DOCUMENTATION PAGE

Form Approved
OMB No. 0704-0811

The public reporting burden for this collection of information is estimated to average 1 hour per response, including the time for reviewing instructions, searching existing data sources, gathering and maintaining the data needed, and completing and reviewing the collection of information. Send comments regarding this burden estimate or any other aspect of this collection of information, including suggestions for reducing the burden to Department of Defense, Washington Headquarters Services, Directorate for Information Operations and Reports (0704-0188), 1215 Jefferson Davis Highway, Suite 1204, Arlington, VA 22202-4302. Respondents should be aware that notwithstanding any other provision of law, no person shall be subject to any penalty for failing to comply with a collection of information, it if does not display a currently valid OMB control number.

PLEASE DO NOT RETURN YOUR FORM TO THE ABOVE ADDRESS.

1. REPORT DATE *(DD-MM-YYYY)*	2. REPORT TYPE	3. DATES COVERED *(From – To)*
February 2005	Final	October 2000 to November 2004

4. TITLE AND SUBTITLE

FINAL REPORT - FIELD DEMONSTRATION AND VALIDATION OF A DISSOLVED HYDROGEN ANALYZER

5a. CONTRACT NUMBER

5b. GRANT NUMBER

5c. PROGRAM ELEMENT NUMBER

6. AUTHOR(S)

Carmen A. Lebrón NFESC; Barbara Sugiyama NFESC; Patrick J. Evans, Ph.D.CDM; Mary Trute CDM; Roger Olsen, Ph.D. CDM; John Eisenbeis, Ph.D. CDM; Frank Chapelle, Ph.D. USGS

5d. PROJECT NUMBER

5e. TASK NUMBER

5f. WORK UNIT NUMBER

7. PERFORMING ORGANIZATION NAME(S) AND ADDRESSES

Commanding Officer
Naval Facilities Engineering Service Center
1100 23rd Avenue
Port Hueneme, CA 93043

8. PERFORMING ORGANIZATION REPORT NUMBER

CR-05-003-ENV

9. SPONSORING/MONITORING AGENCY NAME(S) AND ADDRESS(ES)

ESTCP
901 N. Stuart St., Suite 303
Arlington, VA 22203-1853

10. SPONSOR/MONITORS ACRONYM(S)

ESTCP

11. SPONSOR/MONITOR'S REPORT NUMBER(S)

12. DISTRIBUTION/AVAILABILITY STATEMENT

Distribution is unlimited

13. SUPPLEMENTARY NOTES

14. ABSTRACT

Monitored natural attenuation (MNA) is a cost-effective remediation approach that is applicable to many sites and has been embraced by the U.S. Department of Defense (DoD). Monitored natural attenuation can be used to mitigate petroleum hydrocarbon, chlorinated hydrocarbon, and metal-contaminated sites as an alternative to groundwater pump and treat methods.

Determination of MNA's technical applicability for a given site is based on sampling and analysis, data evaluation and modeling, and long-term monitoring. Parameters that are evaluated include concentrations of contaminants, electron acceptors, and electron donors. These concentrations in combination with hydrogeologic, soil, and microbial characteristics are used to assess the fate and transport of contaminants and the potential for natural attenuation.

This report describes the demonstration of a novel analytical technology: a dissolved hydrogen (DH) analyzer. The report describes demonstration of the DH analyzer at three Department of Defense (DoD) sites as well as supplemental development of the DH analyzer.

15. SUBJECT TERMS

Monitored natural attenuation (MNA), biodegradation, in situ, dissolved hydrogen, dissolved gases, geochemistry, natural attenuation, bioremediation

16. SECURITY CLASSIFICATION OF:			17. LIMITATION OF ABSTRACT	18. NUMBER OF PAGES	19a. NAME OF RESPONSIBLE PERSON
a. REPORT	b. ABSTRACT	c. THIS PAGE			19b. TELEPHONE NUMBER *(include area code)*
U	U	U	U	288	

Environmental Security Technology Certification Program (ESTCP)

Final Report
Field Demonstration and Validation of a Dissolved Hydrogen Analyzer
ESTCP Project Number ER-0009

November 2004

Final

Table of Contents

Preface 1
Executive Summary 2
1.0 Introduction 5
1.1 Background 5
1.2 Objectives of the Demonstration 6
1.3 Regulatory Drivers 6
1.4 Stakeholder/End-User Issues 7
2.0 Technology Description 8
2.1 Technology Development and Application 8
2.1.1 Technology Development 8
2.1.2 Technology Application 12
2.2 Previous Testing of the Technology 13
2.2.1 Pre-ESTCP Field Results 13
2.3 Factors Affecting Cost and Performance 14
2.4 Advantages and Limitations of the Technology 15
3.0 Demonstration Design 16
3.1 Performance Objectives 16
3.1.1 Deviations from Demonstration Plan 16
3.1.2 Meeting Performance Objectives 16
3.2 Selection of Test Site(s) 18
3.3 Test Site Descriptions 19
3.3.1 Site 1 – SUBASE Bangor 19
3.3.2 Site 2 – Fort Lewis 20
3.3.3 Site 3 – NAS Pensacola 20
3.4 Pre-Demonstration Testing and Analysis 21
3.4.1 Sensor Development 21
3.4.2 Gas-Liquid Equilibration Optimization 31
3.4.3 Elimination of Parts That Generated Hydrogen 31
3.5 Testing and Evaluation Plans 32
3.5.1 Demonstration Installation and Start-Up 32
3.5.2 Period of Operation 32
3.5.3 Amount/Treatment Rate of Material to Be Treated 32
3.5.4 Residuals Handling 32
3.5.5 Operating Parameters for the Technology 33
3.5.6 Experimental Design 36
3.5.7 Sampling Plan 36
3.5.8 Demobilization 39
3.6 Selection of Analytical/Testing Methods 39
3.7 Selection of Analytical/Testing Laboratory 39

4.0 Performance Assessment 40
4.1 Performance Criteria 40
4.2 Performance Confirmation Methods 40
4.3 Data Analysis, Interpretation, and Evaluation 43
4.4 Publication of Results 50
5.0 Cost Assessment 51
5.1 Cost Reporting/Analysis 51
6.0 Implementation Issues 52
6.1 Environmental Checklist 52
6.2 Other Regulatory Issues 52
6.3 End-User Issues 52
6.3.1 Future Development Needs 52
7.0 References 53
8.0 Points of Contact 54

Appendices

Appendix A Bubble Strip Method for Analyzing Dissolved Hydrogen
Appendix B Daily Field Reports
Appendix C Quality Assurance Project Plan (QAPP)
Appendix D Health and Safety Plan (HASP)
Appendix E Dissolved Hydrogen Analyzer Development
Appendix F Site 1 – SUBASE Bangor Site Information and Water Quality Data
Appendix G Site 2 – Fort Lewis Logistics Center Site Information and Water Quality Data
Appendix H Site 3 – Pensacola Naval Air Station Site Information
Appendix I Dissolved Hydrogen Analyzer Design

List of Figures

2-1 Dissolved Hydrogen Analyzer Housed in a Protective Case
2-2 Dissolved Hydrogen Analyzer Field Setup
2-3 Dissolved Hydrogen Analyzer Panel with Cover Removed
2-4 Close-up of the Figaro Hydrogen Sensor Housing Used Within the Dissolved Hydrogen Analyzer
2-5 DH Analyzer Process Flow Diagram
3-1 Project Organization Chart
3-2 Figaro Hydrogen Sensor Response
3-3 Figaro Hydrogen Sensor Performance
3-4 Sensor Response with Methane Filter Carbosieve
3-5 Sensistor Sensor Response to Hydrogen in Nitrogen
3-6 Sensistor Sensor Responsive to 1 ppmv Hydrogen in Nitrogen at 1 L/Min.
3-7 Sensistor Sensor Response to Cycled 0.1 ppmv Hydrogen in Nitrogen at 1 L/Min.
3-8 Sensor Response to 0.6 ppmv Hydrogen in Nitrogen over a Range of Voltage Settings
3-9 Sensistor Sensor Response to 0.11 ppmv Hydrogen after Initial Temperature Optimization
3-10 Sensistor Dynamic vs. Static Response when Exposed to 1 ppmv Hydrogen
3-11 Calibration Run Series Before and After Sensor Saturated with Hydrogen
3-12 Sensistor Sensor Response to 10 ppm Hydrogen in Back-to-Back Calibrations
3-13 Bubble Strip Method Results vs. DH Analyzer Results for Distilled Water Samples
3-14 SUBASE Bangor Sample Collection Points
3-15 Fort Lewis, Washington Sample Collection Points
3-16 NAS Pensacola Sample Collection Points
4-1 Site 1 (SUBASE Bangor) Dissolved Hydrogen Data
4-2 Site 2 (Ft. Lewis) Dissolved Hydrogen Data
4-3 Site 3 (NAS Pensacola) Dissolved Hydrogen Results

List of Tables

3-1 Performance Objectives
3-2 Summary of Methane Absorbents Tested
4-1 Performance Criteria
4-2 Expected Performance and Performance Confirmation Methods
4-3 Summary of Dissolved Hydrogen Results for Site 1 SUBASE Bangor
4-4 Summary of Dissolved Hydrogen Results for Site 2 - Ft. Lewis
4-5 Summary of Dissolved Hydrogen Results for Site 3 - NAS Pensacola

Acronyms

AFB	Air Force Base
bgs	below ground surface
°C	degrees Celsius
CDM	Camp Dresser & McKee Inc.
*c*DCE	*cis*-1,2-dichloroethene
CO	carbon monoxide
CV	Coefficient of variation
CWRU	Case Western Reserve University
DH	dissolved hydrogen
DoD	Department of Defense
dS/dt	change in signal over time
EA	EA Engineering, Science, and Technology
EGDY	East Gate Disposal Yard
EMFs	electromagnetic fields
EPA	Environmental Protection Agency
ESTCP	Environmental Security Technology Certification Program
ft^2	square feet
g	gram
GLE	gas-liquid equilibration
HRC	Hydrogen Release Compound
H_2S	hydrogen sulfide
in.	inch
LCD	liquid crystal display
L/min	liters per minute
MGC	Anaeropack™
mis	metal-insulator-semiconductor
mL	milliliter
mL/min	milliliters per minute
MNA	monitored natural attenuation
mV	millivolts
mV/min	millivolts per minute

mV/sec	millivolts per second
mM	millimolar
msl	mean sea level
N	normal
NAPL	non-aqueous phase liquids
NAS	Naval Air Station
NATS	Natural Attenuation Test Site
NFESC	Naval Facilities Engineering Service Center
nM	nanomolar
OU8	Operable Unit 8
PID	proportional-integral-derivative
PLC	programmable logic controller
ppm	parts per million
ppmv	parts per million by volume
PVC	polyvinyl chloride
PWIA	Public Works Industrial Area
QAPP	Quality Assurance Project Plan
Qva	Vashon Advance Outwash
Qvt	Vashon Till
r^2	correlation coefficient
RABITT	Reductive Anaerobic *In Situ* Treatment Technology
RTD	resistance temperature detector
SBIR	Small Business Innovative Research
TCE	trichloroethene
µg/L	micrograms per liter
µM	micromolar
TEAP	terminal electron acceptor products
USGS	United States Geologic Survey
UST	underground storage tank
VAC	volts of alternating current
VC	vinyl chloride
VDC	volt direct current
VOC	volatile organic compounds

Preface

This report describes the demonstration of a novel analytical technology: a dissolved hydrogen (DH) analyzer. The report describes demonstration of the DH analyzer at three Department of Defense (DoD) sites as well as supplemental development of the DH analyzer.

Several individuals and organizations contributed to completion of this project and are listed below:

Carmen A. Lebrón (PI)	Naval Facilities Engineering Service Center (NFESC)
Barbara Sugiyama	NFESC
Patrick J. Evans, Ph.D. (Co-PI)	Camp Dresser & McKee Inc. (CDM)
Mary Trute	CDM
Roger Olsen, Ph.D.	CDM
John Eisenbeis, Ph.D.	CDM
Frank Chapelle, Ph.D.	United States Geological Survey (USGS)

Executive Summary

Monitored natural attenuation (MNA) is a cost-effective remediation approach that is applicable to many sites and has been embraced by the U.S. Department of Defense (DoD). Monitored natural attenuation can be used to mitigate petroleum hydrocarbon, chlorinated hydrocarbon, and metal-contaminated sites as an alternative to groundwater pump and treat methods.

Determination of MNA's technical applicability for a given site is based on sampling and analysis, data evaluation and modeling, and long-term monitoring. Parameters that are evaluated include concentrations of contaminants, electron acceptors, and electron donors. These concentrations in combination with hydrogeologic, soil, and microbial characteristics are used to assess the fate and transport of contaminants and the potential for natural attenuation.

Concentrations of electron acceptors or their reduced products are typically used to:

1. Identify terminal electron accepting processes (TEAP) responsible for contaminant biodegradation that are occurring in specific areas of a contaminant plume, and

2. Quantify assimilative capacity of an aquifer for contaminants of concern.

TEAPs affect *in situ* transformation of many pollutants in part by their impact on dissolved hydrogen (DH) concentrations in groundwater. Identification of TEAPs and DH concentrations can indicate specific degradation patterns of contaminants such as chlorinated hydrocarbons and benzene.

Although DH measurements are proven to be a useful tool to delineate the TEAPs in aquifers, this parameter is not measured in the field due to the expensive analytical equipment that is required. A portable DH analyzer was invented and developed by Camp Dresser & McKee Inc. (CDM). Such an analyzer does not exist elsewhere and the only other means available to measure DH in the field at the required low concentrations involves use of the "bubble-strip" method in conjunction with a reduction gas analyzer (Chapelle et al.1997). This method is difficult to perform, time-consuming, and expensive; therefore, it has not gained widespread acceptance as a field analytical method.

The main objectives of this demonstration were to:

- Validate the DH analyzer by determining the correlation between the DH analyzer results and those obtained using the standard bubble strip/reduction gas analyzer method.

- Quantify operational costs associate with using the DH analyzer

The DH analyzer was used to analyze groundwater from existing monitoring wells at three sites to evaluate performance under a range of conditions. The sites were SUBASE Bangor (Kipsap County, Washington), Fort Lewis Logistics Center (Tillicum, Washington), and the Naval Air

Station in Pensacola Florida (NAS Pensacola). Groundwater was analyzed by both methods (the standard bubble strip method and the novel analyzer developed by CDM) in locations at each site that were expected to cover a wide range of hydrogen concentrations. Also, samples were analyzed from locations with a range of groundwater contaminants, including fuel hydrocarbons and chlorinated solvents.

Performance of the DH analyzer was evaluated based on the following criteria:

- **Accuracy** as demonstrated by a one-to-one correlation between the standard bubble strip method and the novel analyzer.
- **Range** as demonstrated by a response from less than 0.2 nM to greater than 10 nM DH.
- **Precision** as demonstrated by a low coefficient of variation amongst replicate analyses.
- **Sample throughput** as demonstrated by low analysis time relative to the bubble-strip method.
- **Mechanical reliability** as demonstrated by a low incidence of failure.
- **Versatility** as demonstrated by acceptable performance at all three sites.

At each of the three demonstration sites DH measurements were taken from 10 monitoring wells using the DH analyzer and the reference (bubble strip) method. The correlation coefficients for the two methods for Sites 1, 2, and 3 were 0.80, 0.24, and 0.01, respectively. The variability of correlation of the DH analyzer results to bubble strip method results has been determined to be most likely due to interferences from dissolved gases [primarily methane and hydrogen sulfide (H_2S)] in the groundwater analyzed. Specifically, the ability of the various hydrogen sensors tested to accurately measure gaseous hydrogen was negatively impacted by the presence of other gases that partitioned from groundwater during gas-liquid equilibration (GLE).

The interference of other dissolved gases impacted how the DH analyzer performed against several performance criteria, including accuracy, precision, sensitivity, and range. It was evident that further investigation and testing of hydrogen sensors not susceptible to interference by other dissolved gases would be required for the DH analyzer to be a reliable field instrument. Additionally, the viability, or lack thereof, of the DH analyzer could not be demonstrated at this time because of poor precision (e.g., coefficient of variation of 17 to 67 percent) of the standard reference method (i.e., the bubble strip method). Therefore, ESTCP discontinued further demonstration of the analyzer.

These demonstrations showed that while the DH analyzer is not yet ready for commercialization, with further development it can be a valuable tool for providing accurate field analyses of dissolved hydrogen. This further development needs to focus on development of better sensors,

addition of better adsorbents for interfering gas removal, development of leak detection systems, and improvement of mechanical stability.

1.0 Introduction

1.1 Background

Monitored natural attenuation (MNA) is a cost-effective remediation approach that is applicable to many sites and has been embraced by the U.S. Department of Defense (DoD). Monitored natural attenuation can be used to mitigate petroleum hydrocarbon, chlorinated hydrocarbon, and metal-contaminated sites as an alternative to groundwater pump and treat methods.

Determination of MNA's technical applicability for a given site is based on sampling and analysis, data evaluation and modeling, and long-term monitoring. Parameters that are evaluated include concentrations of contaminants, electron acceptors, and electron donors. These concentrations in combination with hydrogeologic, soil, and microbial characteristics are used to assess the fate and transport of contaminants and the potential for natural attenuation.

Concentrations of electron acceptors or their reduced products are typically used to:

1. Identify terminal electron accepting processes (TEAP) responsible for contaminant biodegradation that are occurring in specific areas of a contaminant plume, and

2. Quantify assimilative capacity of an aquifer for contaminants of concern.

TEAPs affect *in situ* transformation of many pollutants in part by their impact on dissolved hydrogen (DH) concentrations in groundwater. Identification of TEAPs and DH concentrations can indicate specific degradation patterns of contaminants such as chlorinated hydrocarbons and benzene.

Although DH measurements are proven to be a useful tool to delineate the TEAPs in aquifers, this parameter is not measured in the field due to the expensive analytical equipment that is required. A portable DH analyzer was invented and developed by Camp Dresser & McKee Inc. (CDM) (Evans 2001a,b; and Evans et al. 2001). Such an analyzer does not exist elsewhere and the only other means available to measure DH in the field at the required low concentrations involves use of the "bubble-strip" method in conjunction with a reduction gas analyzer (Chapelle et al. 1997). This method involves equilibration of a bubble of nitrogen with a flowing stream of groundwater in a gas-sampling bulb made from glass. Samples of the gas bubble are injected into a reduction gas analyzer wherein the hydrogen chemically reduces a heated bed of mercuric oxide to form gaseous mercury, which is sensed by an ultraviolet detector. Chromatographic separation of the hydrogen from other reducing gases is required before mercuric oxide reduction. The gaseous hydrogen concentration is then related to the DH concentration by Henry's Law, where 0.1 nanomolar (nM) of DH approximately correlates to 0.125 parts per million by volume (ppmv) of gaseous hydrogen at equilibrium and ambient temperature and pressure. This method is difficult to perform, time-consuming, and expensive; therefore, it has not gained widespread acceptance as a field analytical method. While offsite laboratory analysis of DH can be performed, the benefits of near real-time results are not available with this approach.

There is a need for standardized and cost-effective analytical technologies to support MNA efforts. The DoD is responsible for approximately 2,093 characterized chlorinated solvent plumes (EPA 2003). Monitored natural attenuation is applicable to approximately 29 percent of chlorinated solvent sites, or 420 of the DoD plumes (EPA 1999). Enhanced anaerobic biodegradation may also be applicable to many of these sites. Dissolved hydrogen is typically not measured in the field during MNA evaluations because of difficulty and cost associate with the bubble strip method. The DH analyzer will benefit the DoD by making this analysis available, which will promote application of natural attenuation and enhanced anaerobic biodegradation at these sites. The average cost for a pump and treat operation is $4.2 million per site (EPA 2003). If MNA is applied to 25 percent of the chlorinated plumes (~100 sites) at a cost of $1 million per site, the potential savings could reach $320 million.

1.2 Objectives of the Demonstration

The main objectives of this Environmental Security Technology Certification Program (ESTCP) demonstration were to:

- Validate the DH analyzer by determining the correlation between the DH analyzer results and those obtained using the standard bubble strip/reduction gas analyzer method.

- Quantify operational costs associate with using the DH analyzer

These objectives were accomplished by using the DH analyzer to analyze groundwater from existing monitoring wells at three sites to evaluate its performance under a range of conditions. The sites were SUBASE Bangor (Kipsap County, Washington), Fort Lewis Logistics Center (Tillicum, Washington), and the Naval Air Station in Pensacola Florida (NAS Pensacola). Groundwater was analyzed by both methods in locations at each site that were expected to cover a wide range of hydrogen concentrations. Also, samples were analyzed from locations with a range of groundwater contaminants, including fuel hydrocarbons and chlorinated solvents.

1.3 Regulatory Drivers

Dissolved hydrogen is referenced in the EPA technical guidance on natural attenuation of chlorinated solvents (EPA 1998); however, analysis of this analyte is not required at this time and is considered optional by regulatory agencies. Additionally, no method for DH measurement has been approved by any regulatory agency.

With respect to execution of this project, there was minimal regulatory involvement, since this was a demonstration of analytical techniques and not of a remediation technology. Local base and Naval Facilities Engineering Services Center (NFESC) personnel informed regulators of the demonstration project as necessary. Drilling permits were obtained as required by registered drillers under subcontract to CDM.

1.4 Stakeholder/End-User Issues

In evaluating MNA for use at a particular site, there is a need for an easy, quick, and reliable way to measure DH concentrations in groundwater. This demonstration addressed the ability of the DH analyzer to fulfill this need, and this report documents the DH analyzer performance in this regard.

2.0 Technology Description

2.1 Technology Development and Application

The DH analyzer is a field-ready instrument that is enclosed in a protective case (Figures 2-1 through 2-4) operates off of a 12-volt DC current power supply and is connected to the discharge of a groundwater extraction pump such as a bladder pump. Figure 2-5 is a schematic of the DH analyzer. Groundwater is pumped into the analyzer and passes through a gas-liquid equilibration (GLE) device that transfers dissolved hydrogen from groundwater to a carrier gas. The carrier gas is then treated by a series of catalysts to remove interfering gases. The hydrogen in the treated carrier gas is then measured using a highly sensitive solid-state sensor. The analyzer is controlled by a microprocessor, and initial data indicated a linear response that is sensitive to less than 0.2 nM can be attained.

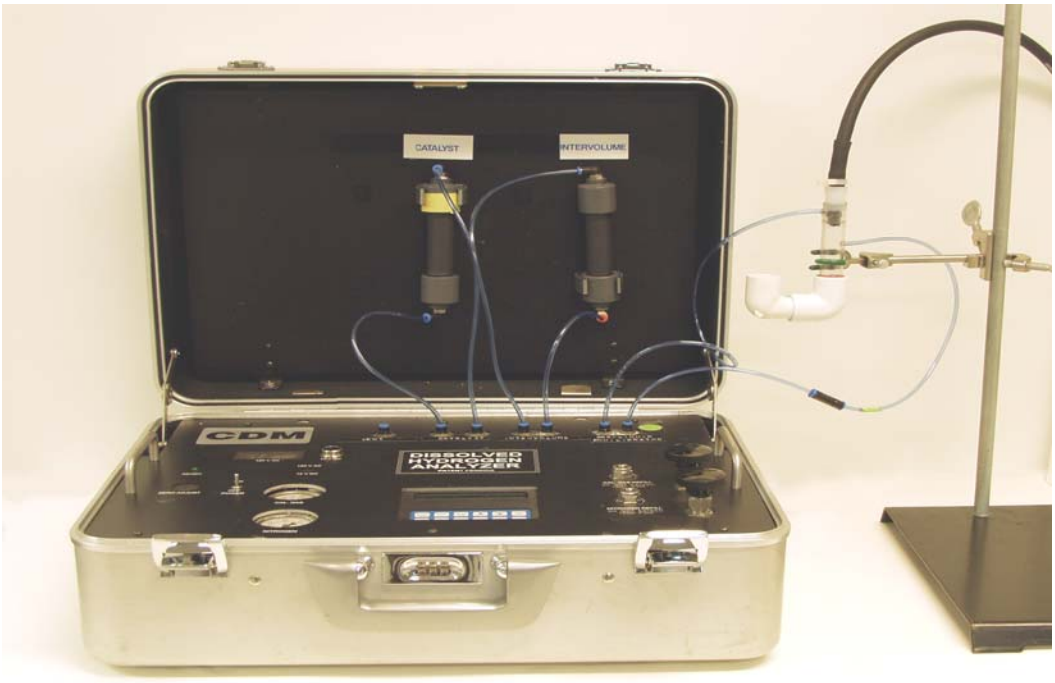

Figure 2-1. Dissolved Hydrogen Analyzer Housed in a Protective Case

Figure 2-2. Dissolved Hydrogen Analyzer Field Setup

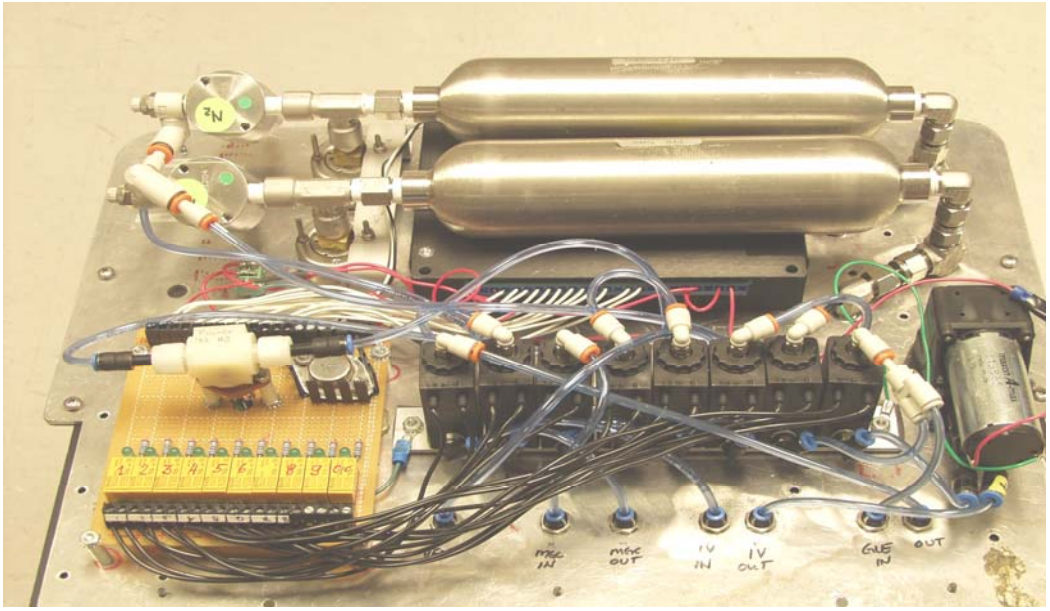

Figure 2-3. Dissolved Hydrogen Analyzer Panel with Cover Removed

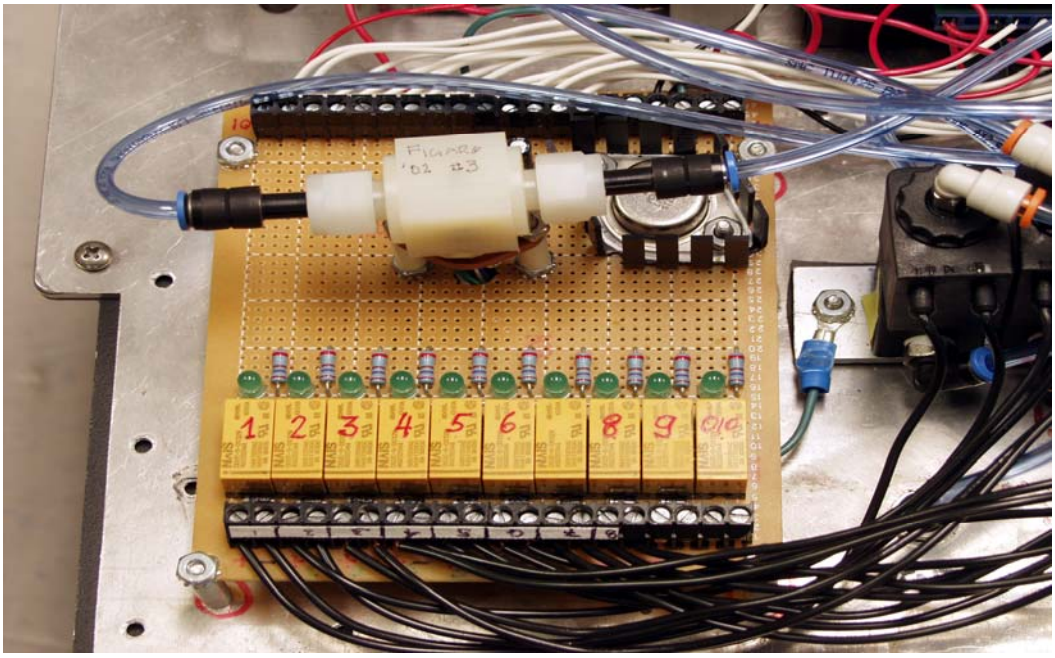

Figure 2-4. Close-up of the Figaro Hydrogen Sensor Housing Used Within the Dissolved Hydrogen Analyzer

2.1.1 Technology Development

The DH analyzer was largely developed under a Phase II Small Business Innovative Research (SBIR) grant funded by the Air Force and was documented in AGI 1999. This section outlines the chronology of development of the analyzer that was first used in the ESTCP demonstrations. Details of this chronology are provided in Appendix E. Enhancements that were made to the analyzer during the ESTCP demonstrations are described in Section 3.4 of the text.

The following bullets summarize the developments that were made to the DH analyzer prior to the ESTCP demonstrations:

- Prototype I was developed that included using a semiconductor-based hydrogen sensor.
- This sensor was shown to give unstable voltage output at low DH concentrations and was temperature sensitive.
- Prototype II was developed with a temperature controller to stabilize output.
- The hydrogen sensor was found to be sensitive to electromagnetic fields.

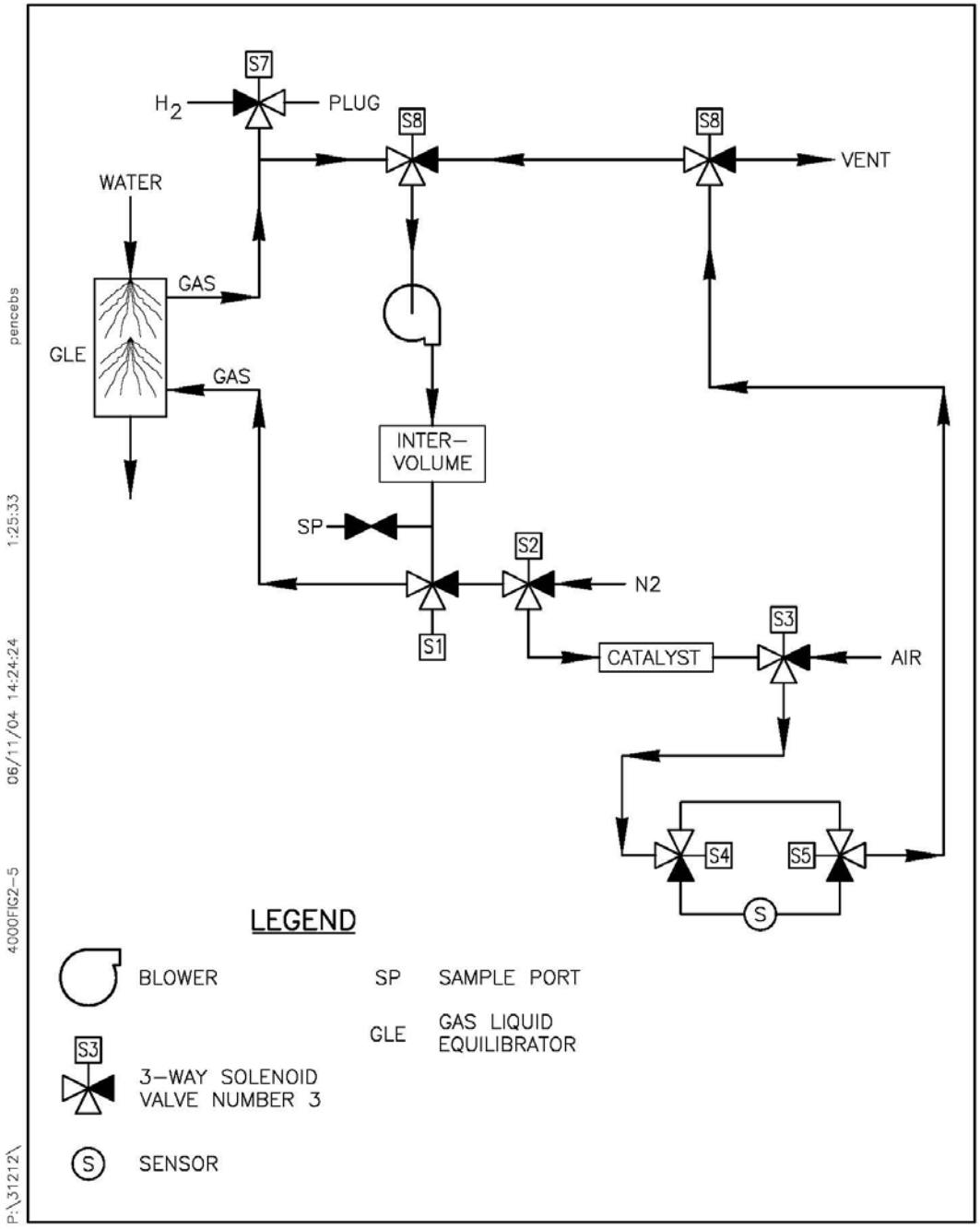

CDM

Figure 2–5
DH ANALYZER PROCESS FLOW DIAGRAM

- Prototype III induced transfer of hydrogen to a carrier gas and analysis of this gas. It incorporated a programmable logic controller and solenoid valves to control gas flow during analysis.

- Improvements were made to the gas-liquid mass transfer method that transferred DH to the gaseous phase for detection.

- The hydrogen sensor was modified to address oxygen interference.

- Methods were tested for removing oxygen from the carrier gas being analyzed.

- Methods were tested for removing oxygen, carbon monoxide (CO), and hydrogen sulfide (H_2S) from the carrier gas.

- Modifications were made to reduce the time of analysis.

- Prototype IV was developed and incorporated a new microcontroller and the best of the methods tested for removing interferences from other dissolved gases.

- Prototype IV was the version of the DH analyzer that was used in the initial ESTCP field demonstration.

2.1.2 Technology Application

The DH analyzer can be used for site characterization and for monitoring in MNA applications and enhanced bioremediation projects. During site characterization, DH measurements can indicate the dominant TEAPs in different areas of a given site. Knowledge of these TEAPs can allow scientists, engineers, and regulators to begin to make predictions as to the potential fate of various contaminants of concern. For example, a DH of 0.2 to 0.8 nanomolar (nM) can indicate that iron reduction is dominant. This TEAP may suggest that reduction of *cis*-1,2-dichloroethene (*c*DCE) to vinyl chloride (VC) or ethene is unlikely to be significant. It may also suggest that oxidative mineralization of cDCE or VC to carbon dioxide may occur. Understanding the potential for these different pathways is one of the first steps to documenting natural attenuation at a site. The DH analyzer can also be used to monitor the progress of a natural attenuation remedy. If reductive dechlorination of trichloroethene (TCE) to ethene is the basis of natural attenuation at a given site, it is likely predicated on maintenance of a methanogenic TEAP. Verification that DH is being maintained within the methanogenic TEAP range (5 to 20 nM) can be accomplished only if DH measurement is practical. In addition to MNA, DH measurement can be used to monitor and assess performance of enhanced anaerobic bioremediation remedies. These remedies include injection of electron donors such as molasses, volatile fatty acids (e.g., via Reductive Anaerobic *In Situ* Treatment Technology or "RABITT"), lactic acid, or commercial products such as Regenesis' Hydrogen Release Compound (HRC®). This technology is used to increase DH concentrations and in turn promote reductive dechlorination of chlorinated organics such as TCE. DH measurement can be used to monitor whether these

increased DH concentrations are being attained and whether sufficient electron donor is being injected.

2.2 Previous Testing of the Technology

Earlier prototypes of the DH analyzer were field tested at the following eight sites across the United States during 1998 (AGI 1999):

- Natural Attenuation Test Site (NATS) in Columbus, Mississippi.
- Chlorinated solvent site (USG) in Baltimore, Maryland.
- Chlorinated solvent site (Unisys) in Plymouth, Michigan.
- Operating gasoline station (Chevron) in Nisqually, Washington.
- Chlorinated solvent site at (Union Pacific) rail yard in Sacramento, California.
- Petroleum hydrocarbon site at Hill Air Force Base (AFB) in Ogden, Utah.
- Chlorinated solvent site at (Union Pacific) rail yard adjoining Hill AFB.
- Petroleum hydrocarbon site in Laurel Bay, South Carolina.

At all sites monitoring wells were purged using low flow sampling techniques. This purging and sampling procedure offers the following advantages when compared with traditional groundwater sampling techniques:

- Minimizes purge water requiring disposal.
- Maximizes collection of mobile groundwater constituents flowing within the aquifer.
- Allows collection of groundwater from a discrete interval within the aquifer.
- Minimizes sample contact with the atmosphere.

Purging was accomplished using a pneumatic bladder pump or peristaltic pump. After initial measurements were recorded, the pump was gently lowered into the well, striving to minimize disturbance of water in the water column. After pump setup, the well purging began at the lowest practical flow rate not exceeding 1 liter per minute (L/min). The flow rate was adjusted downward as necessary to avoid the possibility of vertical flow or drawdown within the well.

2.2.1 Pre-ESTCP Field Results

USG - Baltimore, Maryland – Testing of the DH analyzer in Baltimore was unsuccessful because of problems associated with a new batch of hydrogen sensors. Afterward, it was discovered that the sensors required preconditioning. Additionally, the R3-11 catalyst was saturated with water and not adsorbing the CO produced by the MGC oxygen adsorbent.

Unisys - Plymouth, Michigan – The Unisys results indicated that the DH analyzer effectively equilibrated carrier gas with groundwater, but the sensor was insufficiently preconditioned. Results using the DH analyzer initially were lower than results using the bubble-strip method and results from samples collected from the sample ports on the GLE device. After several analyses, sensor sensitivity improved. The alumina sensors required preconditioning at an elevated temperature in a hydrogen or nitrogen atmosphere.

Chevron Station - Nisqually, Washington – At this site, results from the DH analyzer and bubble strip methods gave comparable results, both being near detection limits. The DH analyzer was not calibrated in the field, resulting in lower readings than the bubble-strip method.

Union Pacific Railroad - Sacramento, California – Results at this site demonstrated linearity and reproducibility. The DH analyzer was not calibrated at the Sacramento site because of lack of calibration gas, which resulted in a somewhat high response.

Hill Air Force Base - Ogden, Utah – Bubble-strip results were not obtained at this site because of nitrogen bubble dissolution during the method. Several attempts were made to decrease the pressure and maintain a flow rate above 500 milliliters per minute (mL/min); however, the bubble still dissolved within 10 minutes.

Despite problems with the bubble-strip method, correlation between the carrier gas hydrogen concentrations and the DH analyzer results was good, indicating that the calibration was working properly.

Natural Attenuation Test Site (NATS) - Columbus, Mississippi – This was the first test of Prototype I. Sensor response was observed at high pH levels, but not at low pH levels, presumably due to oxygen interference.

Union Pacific Railroad Yard - Ogden, Utah – Bubble-strip results were not obtained at Ogden Yard because of nitrogen bubble dissolution. Comparing results from the DH analyzer with concentrations of hydrogen in the carrier gas indicated good correlation.

Laurel Bay, South Carolina – Effervescence of groundwater resulted in underestimation of high DH concentrations. This problem was partially solved through use of a bladder pump instead of a peristaltic pump. The DH analyzer additionally underestimated the concentration at Laurel Bay due to failure of the hollow-fiber mass transfer module used as a GLE device.

Following the site visit, testing of the GLE module demonstrated that gas flow was restricted, which is critical for proper operation. This led to the evaluation of several other hollow-fiber modules and sparging modules as alternatives to the Neomecs hollow fiber module used at Laurel Bay.

2.3 Factors Affecting Cost and Performance

The most significant factor affecting the cost of performing field measurements with the DH analyzer is the cost of the analyzer itself. Appendix I contains a list of the components that make up the analyzer. The most costly components are the micro-controller and the protective case that holds the analyzer. Other factors affecting overall cost are consumable supplies (e.g., gases, catalysts, and filters), and replacement parts. Labor costs will likely be minimal if it is assumed that DH is only one of several parameters that are to be measured in the field during a field event. However, if the required equilibration time is long (< about 1 hour), then the use of the analyzer may result in significant labor costs per sampling event.

Regarding factors affecting analyzer performance, this demonstration has shown that perhaps the most critical factor is removing interferences from other dissolved gases such as methane, CO, oxygen, and H_2S. In addition, groundwater introduced into the analyzer must be free of any non-aqueous phase liquids (NAPL). Keeping the analyzer at similar temperatures during the calibration and sampling processes is also important in getting accurate results. The extraction rate from a monitoring well may also affect analyzer performance. Groundwater flow through the analyzer must be continuous and at least 200 mL/min. Greater flows are preferable from the perspective that shorter equilibration times are necessary and the total analysis time is shorter. However, not all wells can sustain flow rates approaching 1,000 mL/min.

2.4 Advantages and Limitations of the Technology

Available methods to quantify DH in groundwater involve either (1) stripping the hydrogen from the groundwater into a carrier gas that is then analyzed at an offsite laboratory with standard turnaround time issues; or (2) using the bubble-strip method described briefly in Section 1.1 and in detail in Appendix A. This existing method is difficult, time consuming, and expensive to use; therefore, it has not gained widespread acceptance as an analytical method. The DH analyzer was shown during Phase II work under a SBIR grant to give comparable results to the standard bubble-strip/reduction gas analyzer method; however, the DH analyzer is simpler to use and unlike the offsite lab method, produces near real-time results. Also, the DH analyzer costs are significantly less than the standard bubble-strip method.

The DH analyzer is field-portable and incorporates the GLE and hydrogen sensing into a single instrument. Thus, the difficulty associated with the bubble-strip method is eliminated. The instrument is user-friendly and requires little technical knowledge for operation. As with any electromechanical device, periodic maintenance is necessary. This includes replacement of filters, catalysts, and gases.

Based on the results of this demonstration, it is clear that a major limitation of the analyzer as it now exists is the need for further investigation to identify a hydrogen sensor that minimizes interferences from other dissolved gases and has sensitivity to hydrogen to produce detection limits near 0.2 nM. A relatively minor limitation of the instrument is an analysis time that is expected to be about 30 minutes but may be up to 1 hour. This time may seem excessive; however, it is comparable to the bubble-strip method and provides near real-time results (as opposed to the offsite lab method). An indirect limitation pertains to well materials of construction, direct push technologies, and use of electric submersible pumps, all of which can result in hydrogen generation, thus giving falsely elevated DH concentrations. Although this limitation is not directly associated with the DH analyzer, it can result in misleading data if not addressed.

3.0 Demonstration Design

The demonstration described in this section was performed by CDM in cooperation with the NFESC as the principal investigator. Points of contact involved in the demonstration are listed in Section 8. A project organization chart is shown in Figure 3-1. The demonstration was conducted in accordance with the Technology Demonstration Plan (NFESC and CDM 2001) with the exceptions noted in Section 3.1.1. The Technology Demonstration Plan also described the demonstration of a second MNA tool – a bioavailable ferric iron assay – and the demonstration of this tool is described in a separate Final Report.

3.1 Performance Objectives

3.1.1 Deviations from Demonstration Plan

This section describes how the demonstration deviated from the methods and approach described in the Demonstration Plan.

The Demonstration Plan stated that field testing would be performed at six DoD sites. Five sites had been selected: Laurel Bay in South Carolina; Fort Lewis and SUBASE Bangor in Washington; Dover AFB in Delaware; and NAS Pensacola in Florida. The sixth site was to be either Cape Canaveral in Florida or Moody AFB in Georgia. However, demonstration of the DH analyzer was discontinued after testing at NAS Pensacola for reasons that are described further in Section 4.3. Significant development of the DH analyzer was also conducted in response to problems identified at SUBASE Bangor and Ft. Lewis. This development is discussed in Section 3.4.

3.1.2 Meeting Performance Objectives

Performance of the DH analyzer was compared to the bubble-strip method used in conjunction with the reduction gas analyzer. At NAS Pensacola, Dr. Frank Chapelle of the United States Geological Survey (USGS) coordinated validation of the DH analyzer and ensured that the bubble-strip/reduction gas analyzer technique was correctly executed. Performance was evaluated based on the following objectives identified in the Demonstration Plan:

- **Accuracy** as demonstrated by a one-to-one correlation between the two analytical techniques.
- **Rang**e as demonstrated by a response from less than 0.2 nM to greater than 10 nM.
- **Precision** as demonstrated by a low coefficient of variation amongst replicate analyses.
- **Sample throughput** as demonstrated by low analysis time relative to the bubble-strip method.
- **Mechanical reliability** as demonstrated by a low incidence of failure.
- **Versatility** as demonstrated by acceptable performance at all three sites.

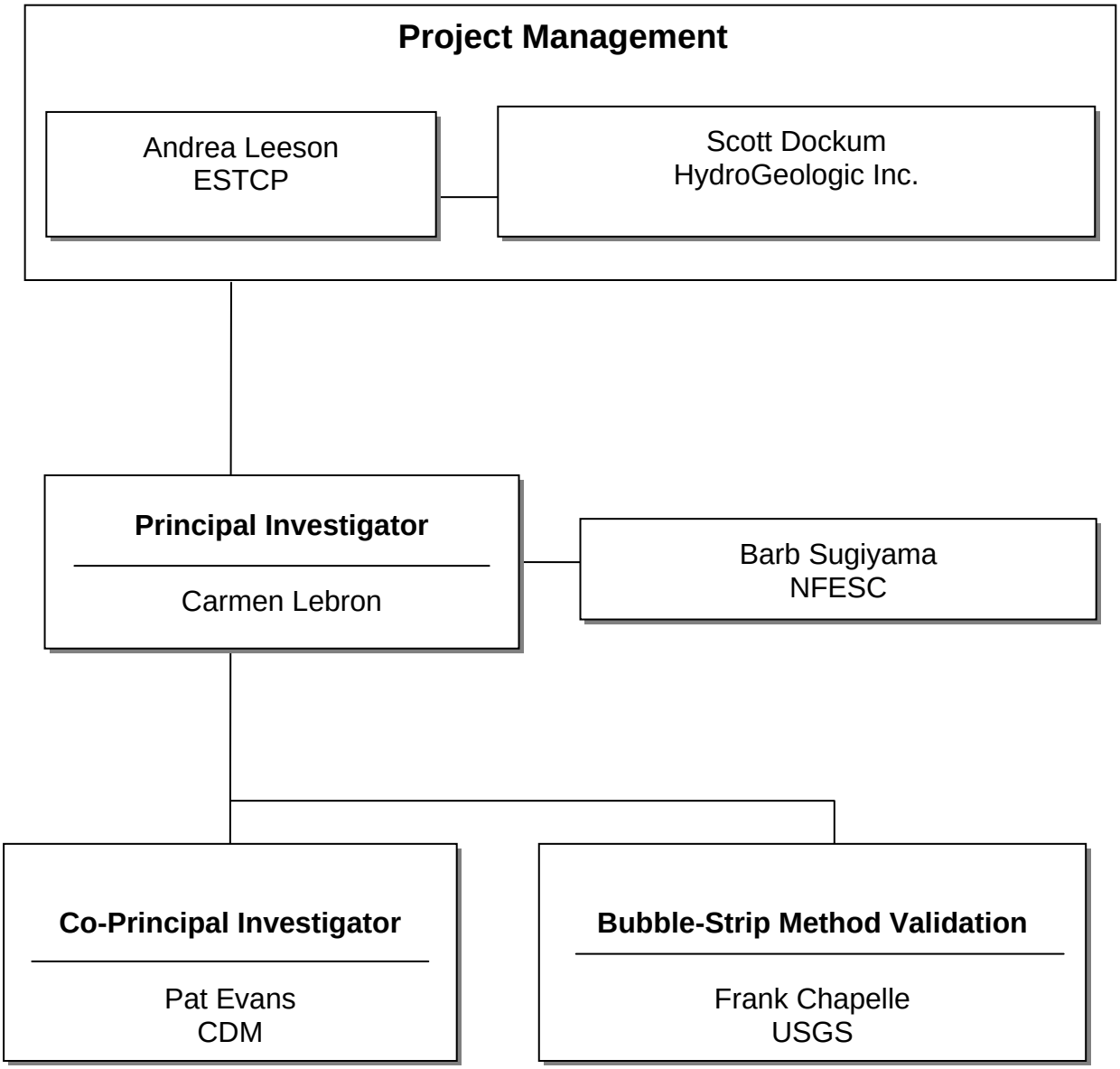

Figure 3-1. Project Organization Chart

A summary of the performance objectives is presented in Table 3-1 along with whether each objective was met during the demonstration.

Table 3-1: Performance Objectives

Type of Performance Objective	Primary Performance Criteria	Expected Performance (Metric)	Actual Performance Objective Met?
Qualitative	1. Sample Processing Rate	Equal to or better than bubble strip method	Not Determined [1]
	2. Mechanical Reliability	Low breakdown incidence	No
	3. Versatility	Applicability to all sites	No
	4. Ease of use	Typical operator training and labor required	Yes
Quantitative	1. Accuracy	Percent error < 10 percent; correlation coefficient (r^2) > 0.9	No
	2. Precision	Coefficient of variation (CV) for DH analyzer equal to or less than CV for reference method	Yes
	3. Sensitivity	< 0.2 nM	Yes (if no interference)
	4. Range	> 10 nM	Yes (if no interference)

[1]Will depend on the hydrogen sensor ultimately used.

3.2 Selection of Test Site(s)

This section describes how the demonstration sites were selected.

Technical and administrative data associated with contaminated areas at each of the sites identified in the Technology Demonstration Plan were acquired and reviewed. Specific information included:

- Availability of an existing groundwater monitoring well network
- Geological and hydrogeological characteristics
- Terminal electron-accepting processes occurring in the aquifer
- Concentrations of parent compounds and presence of daughter products
- Groundwater chemistry

- Ability to drill on site
- Availability and quality of existing site characterization documentation

The objective was to select sites that offered a range of DH concentrations, geochemical characteristics, and TEAPs. This range of DH concentrations enabled validation of the DH analyzer over its full range.

As mention above, five sites were originally selected for field testing in the Demonstration Plan, including:

- Petroleum hydrocarbons at Laurel Bay Exchange Marine Corps Air Station in Beaufort, South Carolina (Laurel Bay).

- Dissolved petroleum hydrocarbons and chlorinated VOCs at Bangor Naval Submarine Base in Kitsap County, Washington (SUBASE Bangor).

- Chlorinated VOCs at Fort Lewis Logistics Center near Tillicum, Washington (Fort Lewis).

- Chlorinated VOCs at Dover AFB in Dover, Delaware (Dover AFB).

- Chlorobenzene plume at NAS Pensacola (Pensacola).

Ultimately, an analyzer was demonstrated at three sites. The DH analyzer was demonstrated at SUBASE Bangor, Fort Lewis and then at NAS Pensacola. Results from the demonstrations at these three sites are given in Section 4.3.

3.3 Test Site Descriptions

3.3.1 Site 1 – SUBASE Bangor

The study area is Operable Unit 8 (OU8), which is located in the Public Works Industrial Area (PWIA) of Bangor. Bangor is located near the town of Silverdale, Washington. An onsite underground storage tank (UST) is believed to be the source of a release of unleaded gasoline into the surrounding media between 1982 and 1986. In 1986, soil vapor extraction/air system and product recovery were implemented to clean up the site. To date, liquid petroleum hydrocarbons remain in several monitoring wells at the PWIA (EA 2000). Chlorinated volatile organic compounds (VOC) are also present in site groundwater (EA 2000).

EA Engineering, Science, and Technology (EA) conducted an investigation to assess natural attenuation processes at OU8 (EA 2000). Site characterization details are presented in Appendix F.

OU8 geological conditions have been highly characterized by drilling and monitoring well installation. The area consists of four stratigraphic units: construction fill, Vashon till (Qvt), Vashon Advance Outwash (Qva), and Lawton Clay. The construction fill can be found 2 to 3 feet below ground surface (bgs) and consists of a sandy material. Underlying the construction fill and

ranging to a depth of about 45 feet bgs is the Vashon till, which consists of silt, sand, gravel, and cobbles. This unit is 20 to 40 feet thick. The Vashon Advance Outwash (location of the shallow aquifer) is beneath the Vashon till and consists of sand, silt, and gravel. The thickness of the Vashon Advance Outwash is about 100 to 130 feet. Beneath the Vashon Advance Outwash is the Lawton Clay aquitard. A silty transition zone in the bottom of the Vashon Advance Outwash separates the shallow aquifer from the lower aquitard.

There are about 100 monitoring wells at OU8. The wells were installed at three different depth intervals: shallow, intermediate, and deep. The depth to groundwater is about 20 feet bgs and the general flow direction is southeast. The Vashon Advance Outwash lies beneath the Vashon till at OU8 and is the location of the shallow unconfined aquifer. The shallow aquifer contained in the Vashon Advance Outwash is about 125 feet thick. The shallow wells are screened within 30 feet of the water table, intermediate wells are screened within the middle 40 feet of the aquifer thickness, and the deeper wells are screened within 30 feet of the Lawton Clay aquitard. The plume contains dissolved petroleum contaminants (including benzene) and DCA. The majority of the contaminants are located in the shallow and intermediate zones of the Vashon Advance Outwash (EA 2000).

3.3.2 Site 2 – Fort Lewis

Fort Lewis Logistics Center is located south of Tacoma, Washington. The source area is the East Gate Disposal Yard (EGDY), which is situated at the northwest corner of the base. Originally, the site was used for storage and disposal of various solid and liquid waste products of the Fort Lewis Logistics Center. Since 1982, studies have been conducted at the EGDY to verify and delineate contamination at the site. Affected media were soil and groundwater, with the prominent contaminant being TCE (Battelle 2000). Battelle Memorial Institute (in cooperation with the Air Force Research Laboratory, USGS, Environmental Protection Agency [EPA], and Cornell University) is performing RABITT at the East Gate Disposal Yard at Fort Lewis (Battelle 2000). Specific site characterization details for Fort Lewis are presented in Appendix G.

The upper portion of the Logistics Center site consists of a brown to black alluvial sand and gravel matrix with local lenses of silts. The material gets coarse with depth. Underlying this formation at about 260 feet mean sea level (msl) is the Vashon Till, which is a complex mixture of silt, sand, and clay. The Vashon Till has low permeability and serves as a barrier between the upper and deeper aquifers. At the source area the groundwater can be encountered between 8 and 15 feet bgs. Farther downgradient the groundwater is generally between 10 and 35 feet bgs. The upper aquifer is unconfined and mostly anaerobic. Groundwater flow is generally west to northwest. There are well over 80 monitoring wells and piezometers on site.

3.3.3 Site 3 – NAS Pensacola

This site is situated near Pensacola Bay in the far northwest corner of Florida (USGS 1999). The area predominantly consists of marine and fluvial terrace deposits ranging from fine- to medium-grained sands, silts, clays, and gravel. The site has two aquifers, a shallow aquifer and a deeper confined aquifer (referred to as the underlying main producing zone). There is a 20-foot-thick confining barrier of low-permeable silts and clays that separate the upper and lower aquifers. The

upper aquifer is composed of fine- to medium-grained sands. The main producing zone is used locally as a water supply and consists of permeable sands and gravel. Two plumes have been identified at the site, one comprised of chlorinated ethenes and the other chlorinated benzenes. Most of the contaminants on site are located in the upper aquifer region. The depth of contamination ranges from 20 to 40 feet bgs. Site characterization data for NAS Pensacola can be found in Appendix H.

3.4 Pre-Demonstration Testing and Analysis

This section describes the testing and modifications that were made to the DH analyzer prior to the field demonstrations.

3.4.1 Sensor Development

Baseline Figaro TGS821 Testing – The hydrogen sensors from Case Western University used in the DH analyzer prototype III proved to need too much pre-conditioning with hydrogen gas if the sensors had not been used in 24 hours. This pre-conditioning period ran anywhere from 5 to 60 minutes, and made the sensor impractical for field use. In addition, this pre-conditioning requirement appeared to give inconsistent results when DH was measured.

The Figaro TGS821 sensor, manufactured by Figaro USA, Inc., was chosen for evaluation based on a review of vendor literature. The Figaro TGS821 sensor is a thick film tin oxide semi-conductor sensor that is readily available commercially.

Initial TGS821 sensor testing involved exposing the sensor to different concentrations of hydrogen in a nitrogen carrier gas, at a steady flow rate, and recording changes in sensor output. Hydrogen concentrations over three orders of magnitude were tested, and the TGS821 showed markedly differing response to the different hydrogen concentrations (Figure 3-2). The change in signal over time (dS/dt) was then calculated for the different hydrogen concentrations and charted over hydrogen concentration. The linear relationship that existed between hydrogen concentration and dS/dt indicated that the TGS821 was a suitable candidate for further testing (Figure 3-3). Subsequent field trials of the TGS821 showed it to be highly sensitive to methane gas.

Alternative Sensor Testing – Because methane appeared to interfere with the TGS821s' field performance, a new sensor, the AF10 manufactured by Scimarec, Japan was tested as a possible replacement sensor. Exposure to nitrogen, hydrogen, and methane determined that the AF10 was at least as responsive to methane as the TGS821. Therefore, no further work was performed with the AF10 sensor. Also tested at this time was the CAP23L from Capteur Sensors, U.K. This sensor proved to be insensitive to hydrogen and no further testing was done.

Another possible solution to the TGS821 methane interference problem was to use methane adsorbents to remove methane from the gas stream. A number of readily available adsorbents were screened and tested for the ability to remove methane from a nitrogen gas stream. Initial screening tests (see Table 3-2) identified two methane absorbents that showed some promise, and Carbosieve SIII 60/80 was selected for further testing. However, when the adsorbent was tested

under dynamic conditions similar to those that would be present during use in the DH analyzer sensor response to methane was still observed, and no further testing was done (Figure 3-4).

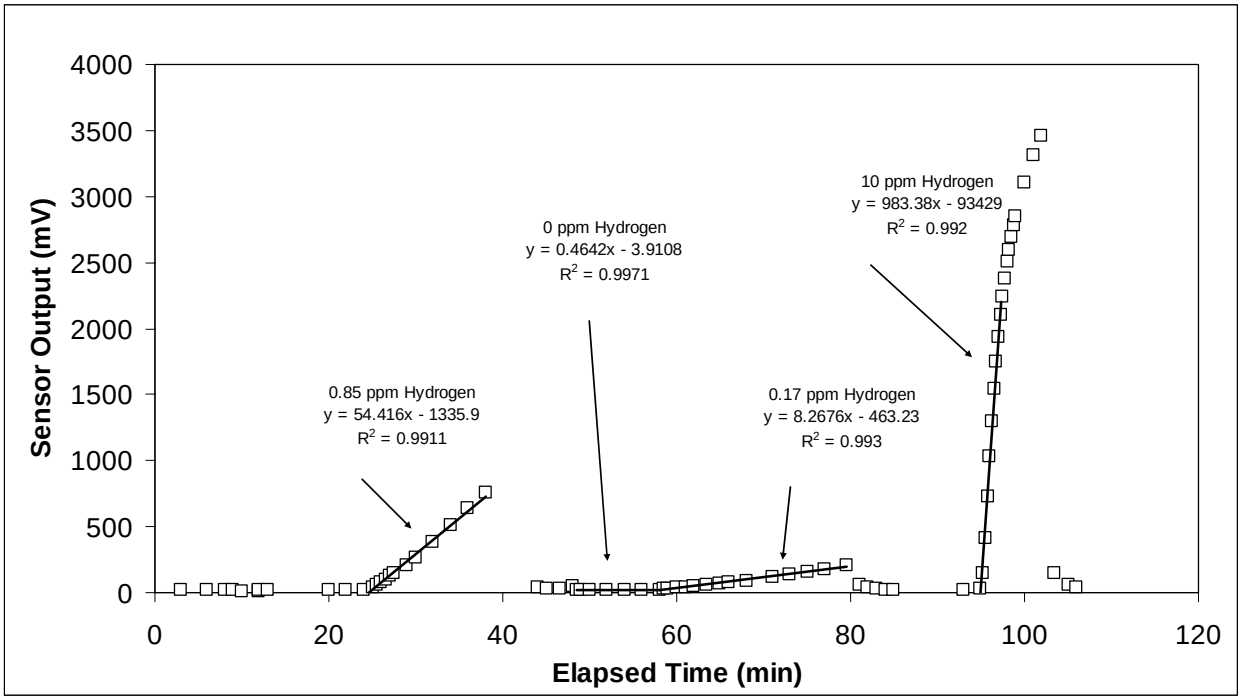

Figure 3-2. Figaro Hydrogen Sensor Response

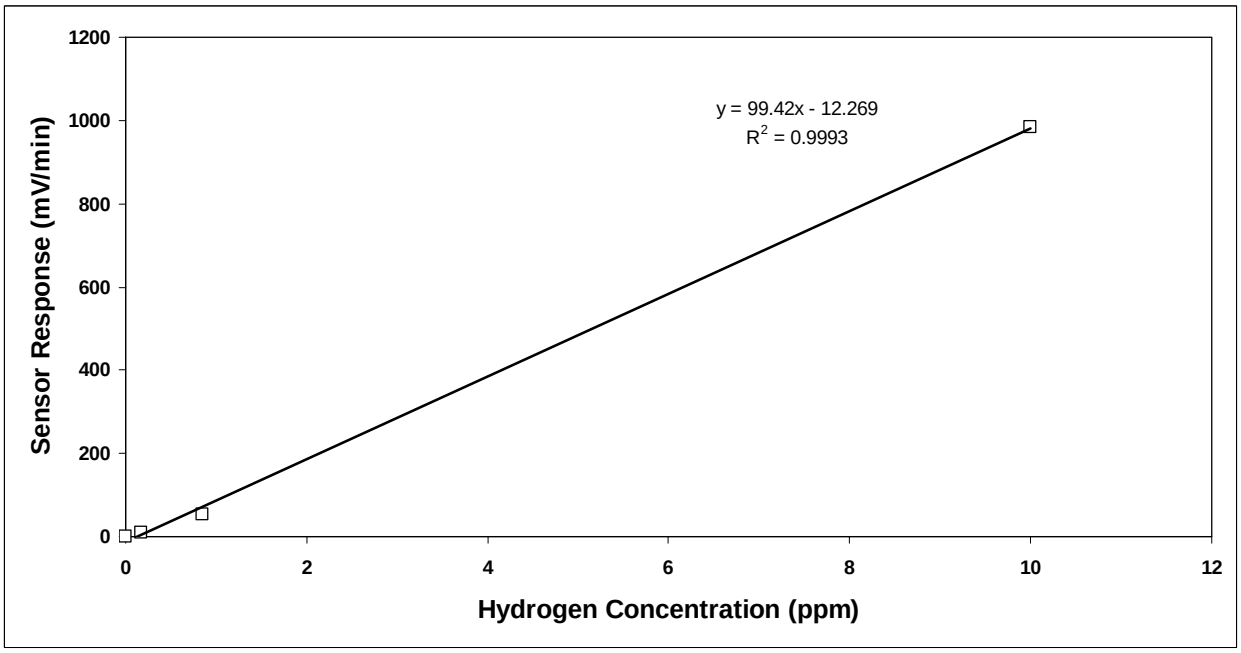

Figure 3-3. Figaro Hydrogen Sensor Performance

Table 3-2: Summary of Methane Absorbents Tested

Material	Effect
Poropak S 50/80	NO
Hayesep DB 60/80	NO
Carbopack X 40/60	NO
Carbopac B 60/80	NO
Carboxen 1000 45/60	~45% methane removal
Carbosieve SIII 60/80	~60% methane removal
Molesieves	
CBV780-X16	NO
H 15IV5000 TrisIV	NO
5A	NO
R3-11	NO
3A	NO
4A	NO
CBV780	NO
HISIV 1000	NO
CBV 901-X16	NO
CP 861DL-25	NO

NO = No observed effect

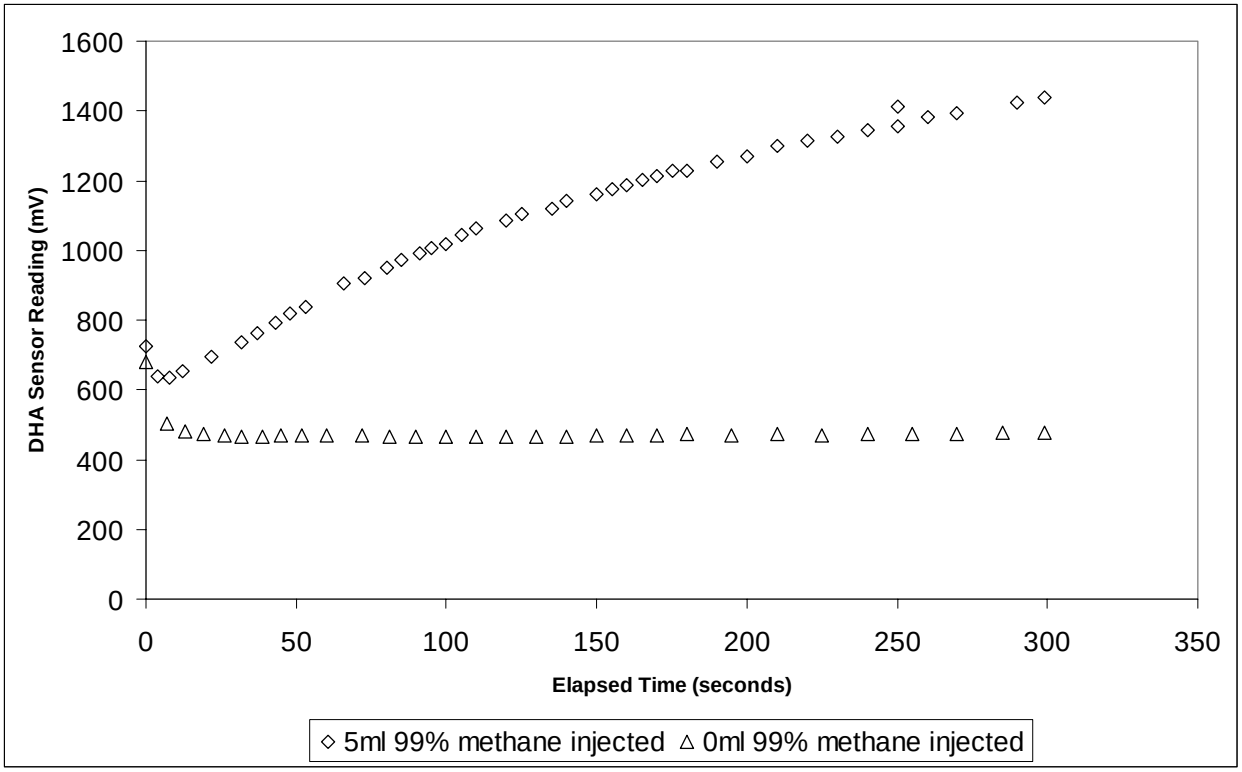

Figure 3-4. Sensor Response with Methane Filter Carbosieve

An HS85 sensor was acquired from Sensistor Technologies, Sweden and exposed to hydrogen at various concentrations in a nitrogen gas stream under constant flow rate conditions to test HS85 sensitivity to hydrogen. Initial bench top testing indicated that the HS85 sensor had good response to hydrogen at 1- and 10-ppmv hydrogen (Figures 3-5 and 3-6), but the sensor was relatively unresponsive at 0.1-ppmv hydrogen (Figure 3-7), the desired detection limit for the DH analyzer. However, since the HS85 literature indicated that response was temperature dependant, further testing was carried out despite the sensor's initial inability to detect 0.1-ppmv hydrogen. Figure 3-8 shows the HS85 response (dS/dt) under different temperature conditions, as controlled by the voltage delivered to the heater. From these data, sensor temperature was optimized at the lowest voltage setting with the highest sensor response. This optimum heater voltage was 6.5 volts, and was used for subsequent HS85 response testing.

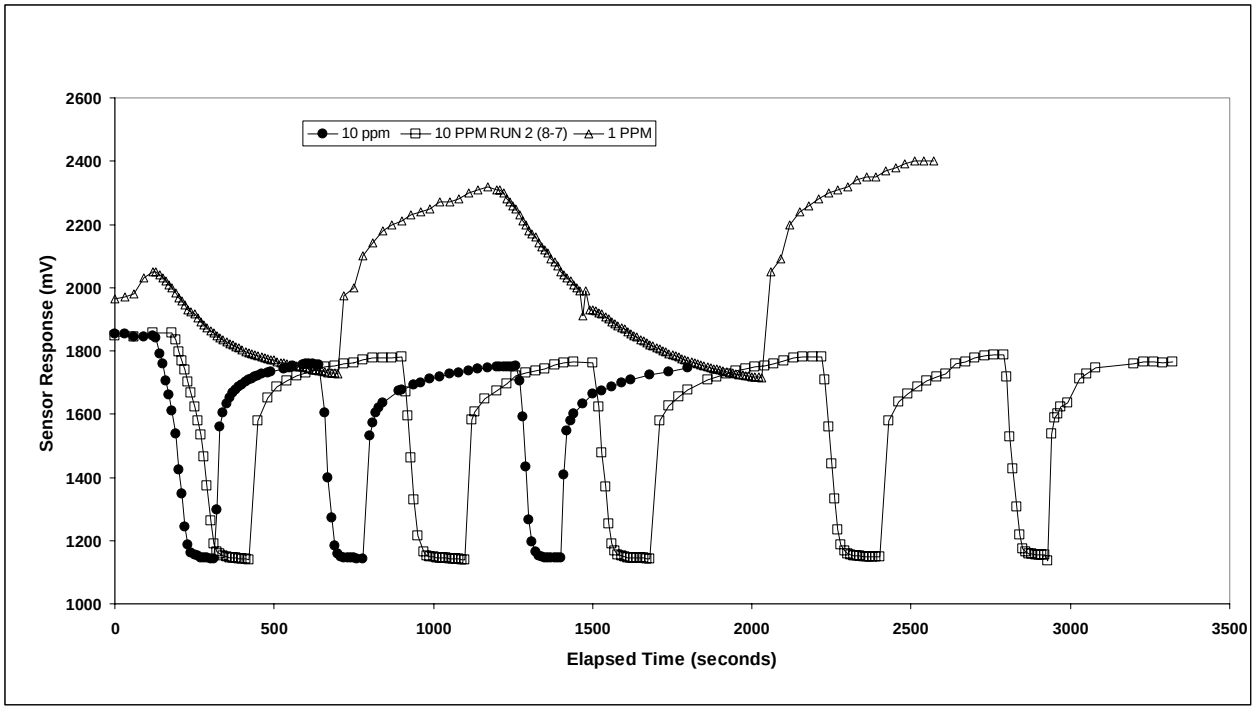

Figure 3-5. Sensitor Sensor Response to Hydrogen in Nitrogen

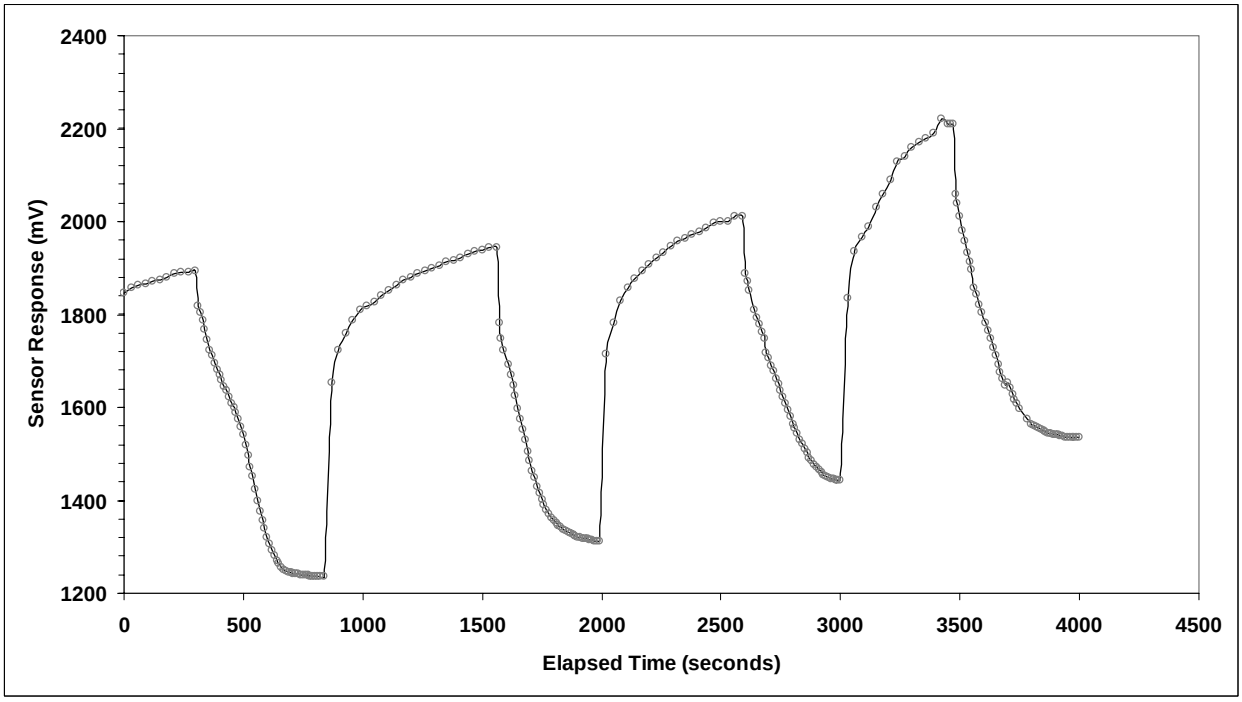

Figure 3-6. Sensitor Sensor Response to 1 ppmv Hydrogen in Nitrogen at 1 L/Min.

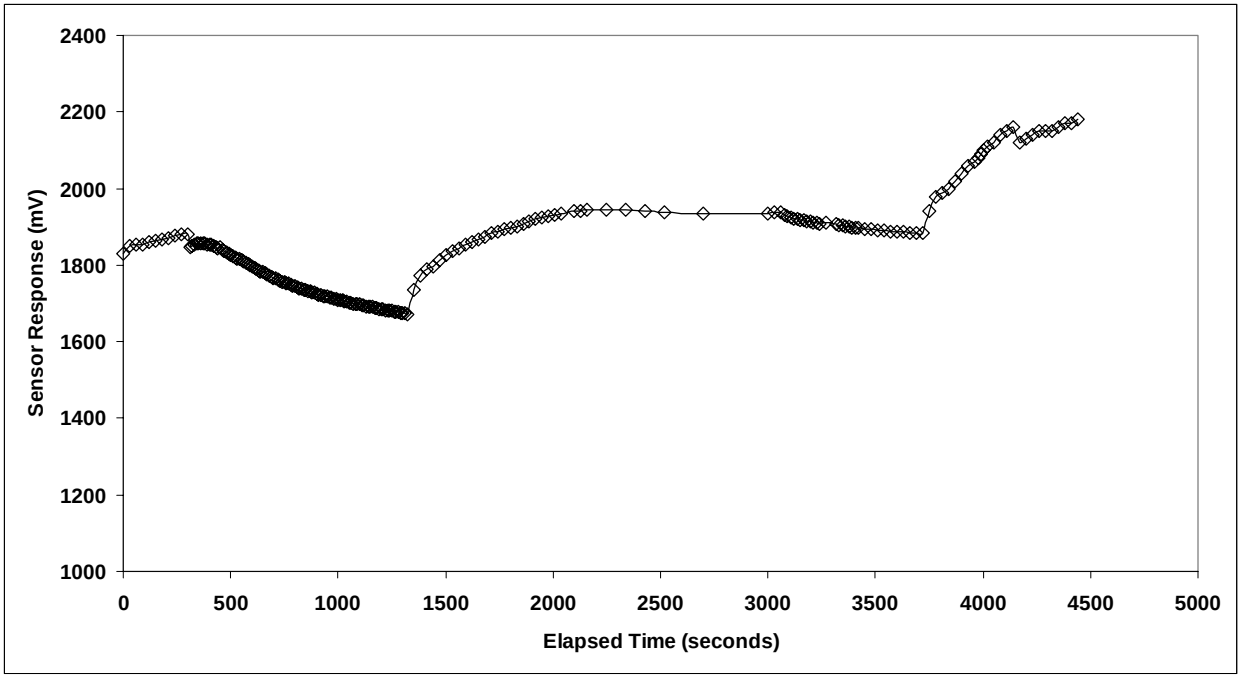

Figure 3-7. Sensistor Sensor Response to Cycled 0.1 ppmv Hydrogen in Nitrogen at 1 L/Min.

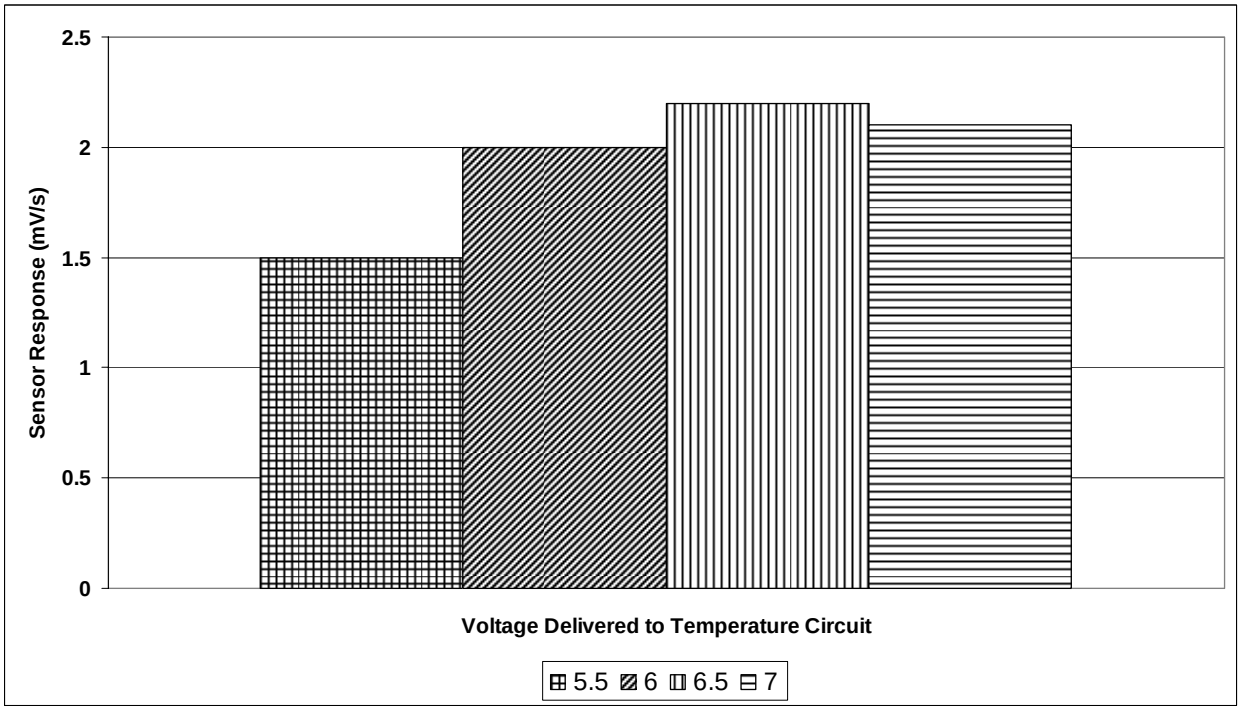

Figure 3-8. Sensor Response to 0.6 ppmv Hydrogen in Nitrogen Over a Range of Voltage Settings

The HS85 was retested for response to 0.1-ppmv hydrogen at the optimized temperature setting. The HS85 did show a response to 0.1-ppmv hydrogen during this testing; however, there was a time delay in the sensor response to hydrogen. The response is illustrated in Figure 3-9, where a flat area in the dS/dt curve can be seen just after the sensor is first exposed to hydrogen. It was speculated that this delayed response could be due to the sensor cooling as the gas stream first started flowing over the sensor. Because of this possible cooling response, the sensor was exposed to hydrogen under dynamic flow and static conditions. Figure 3-10 shows that there was virtually no difference in response between tests where the sensor was in a static gas environment or under continuous flow conditions, and so the HS85 was installed in the DH analyzer for further optimization testing under actual DH analyzer conditions.

Once the HS85 was installed in the DH analyzer, numerous calibration cycles were run using a standard 10-ppmv hydrogen gas, with the resulting calibration factors falling somewhere between 1 and 2 millivolt per second (mV/sec). This response was quite poor compared to the sensor response observed during the initial bench testing. During these tests the HS85 showed responses between 3 and 4 mV/s for hydrogen concentrations below 1 ppmv.

Due to the sensor's low response rate, a proportional-integral-derivative (PID) controller was added to the temperature circuit to keep the sensor temperature consistent. Although there was no difference in response under static versus dynamic conditions at constant temperature (Figure 3-10), there was a clear difference in response at different heater powers (Figure 3-8). Since it is impossible to keep gas flow rates constant in the DH analyzer, due to the nature of the pump and other factors, it was speculated that small temperature fluctuations in the sensor caused by this variable gas flow might have contributed to the poor sensor response.

Calibration factors showed little improvement after installation of the PID controller. However, there did appear to be some suggestion that calibration factors improved after the DH analyzer had recently operated versus when the analyzer had been idle for over one-half hour. This may have been the result of exposure to hydrogen gas during the first calibration cycle. Hydrogen gas exposure may serve to remove accumulated oxide layers on the sensor. To test this, a series of calibration cycles were run. The first eight cycles were run under standard DH analyzer conditions. Hydrogen was run over the sensor before calibration run nine until the sensor reached its maximum value, indicating the sensor was saturated with hydrogen. Then, a ninth calibration factor was run. This ninth calibration factor was significantly greater than those observed before hydrogen was used to flood the sensor. Data are presented in Figure 3-11.

Further testing was done by running five calibrations in sequence, pausing for 30 minutes, and then repeating the sequence. These data (Figure 3-12) also appear to indicate that hydrogen pre-conditioning improved the sensor response. Not only are the initial calibration factors about half of those in subsequent runs, the calibration factors themselves are significantly greater than observed previously. The calibration factors increased from a range of 1-5 mV/sec before the sensor was saturated with hydrogen to about 20 mV/sec.

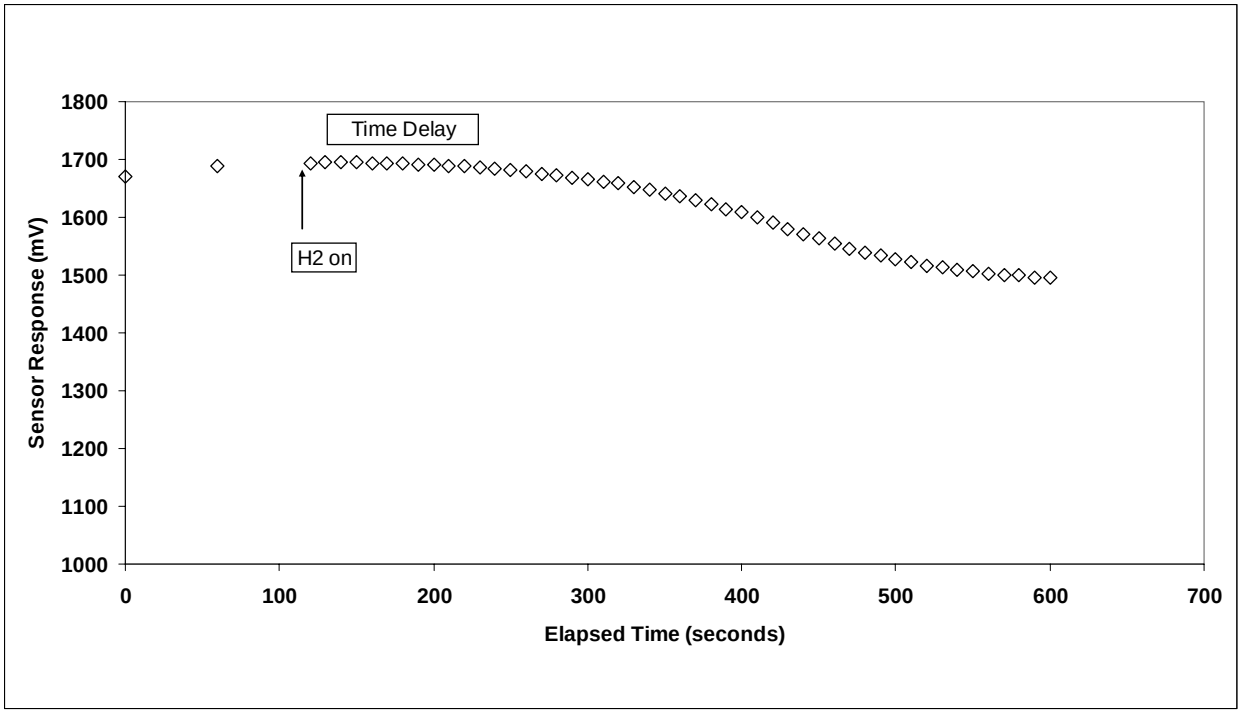

Figure 3-9. Sensistor Sensor Response to 0.11 ppmv Hydrogen After Initial Temperature Optimization

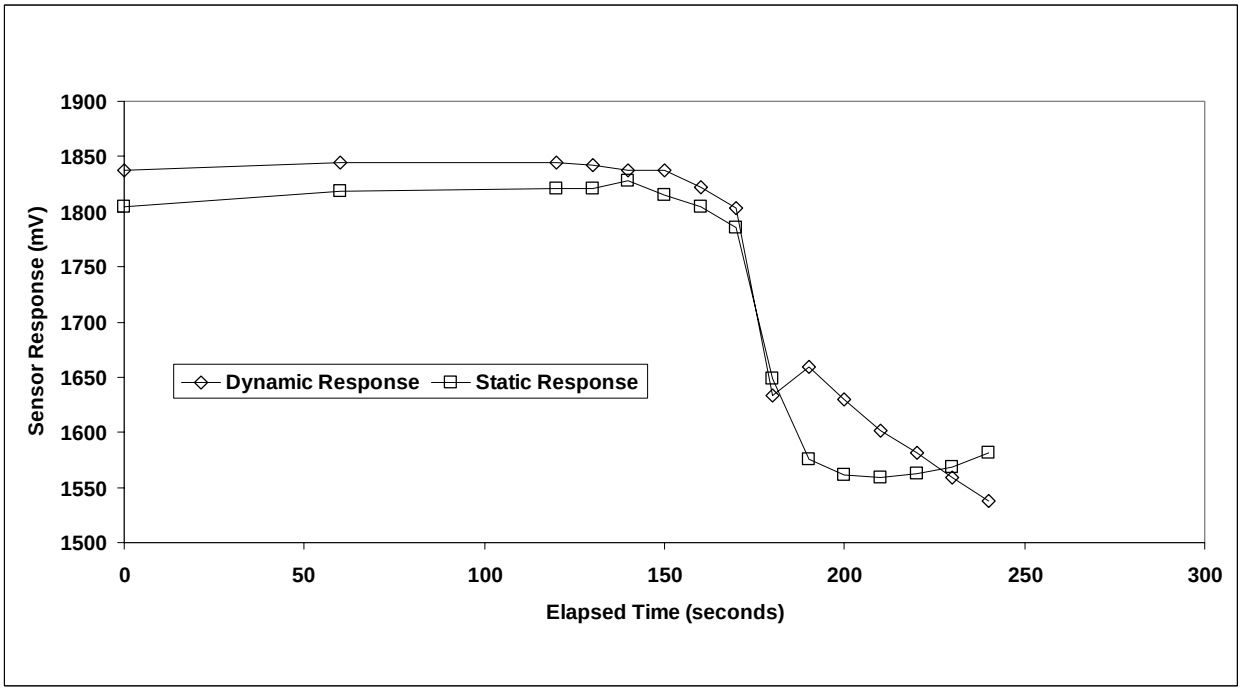

Figure 3-10. Sensistor Dynamic vs. Static Response When Exposed to 1 ppmv Hydrogen

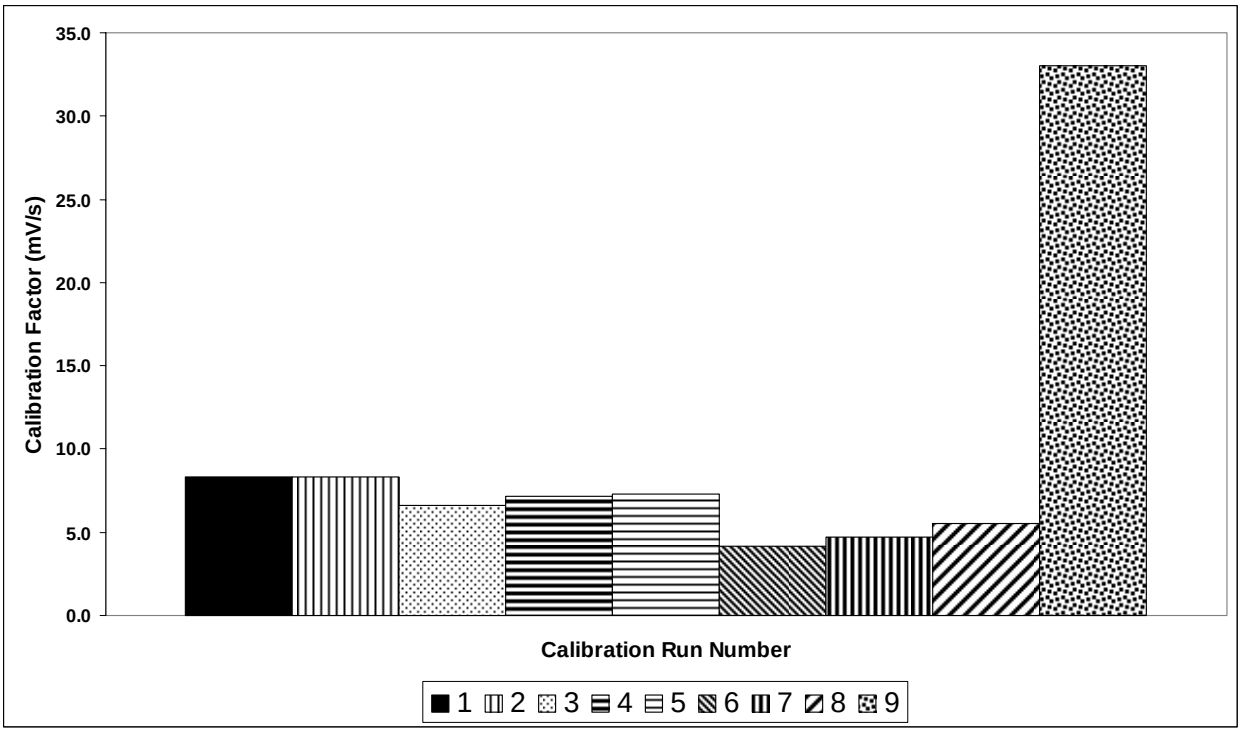

Figure 3-11. Calibration Run Series Before and After Sensor Saturated With Hydrogen

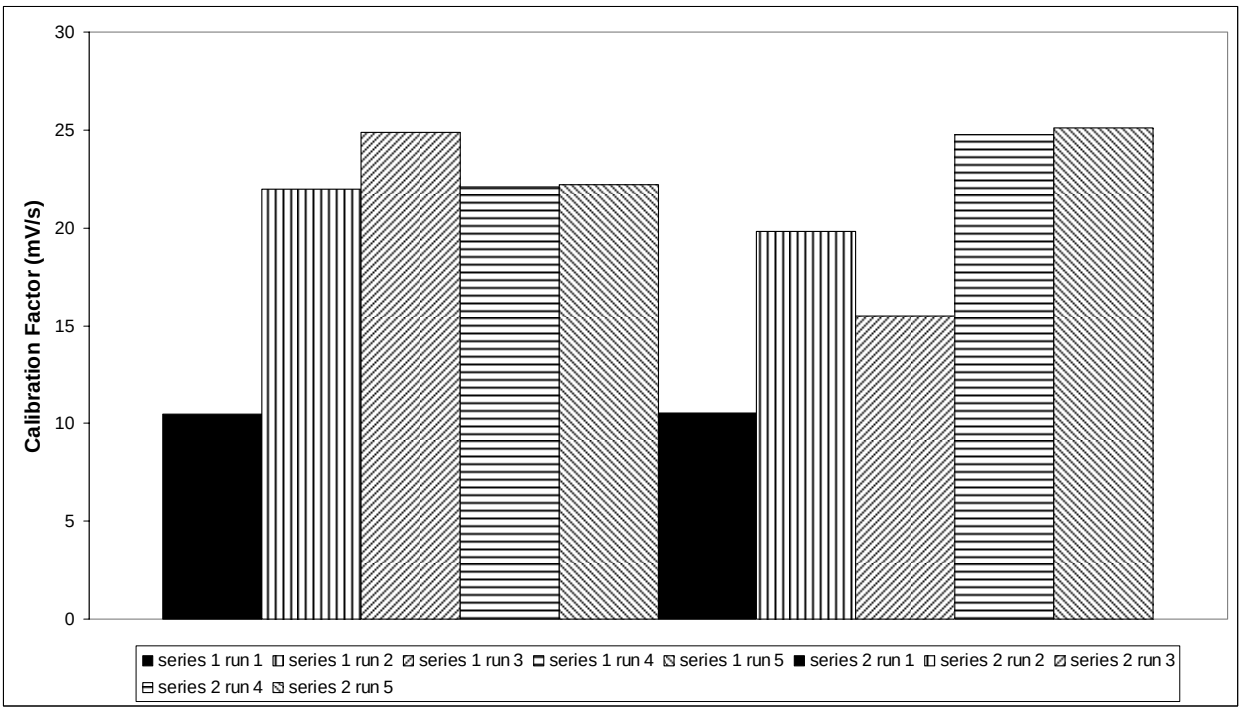

Figure 3-12. Sensistor Sensor Response to 10 ppm Hydrogen in Back-to-Back Calibrations

However, these high calibration factors could not be maintained, and subsequent calibration data were much lower, in the 2-12 mV/sec range, with a great deal of scatter in the calibration factor data from run-to-run. Calibration factors varied substantially from day-to-day and response from sensor to sensor varied as well. However, despite this variation in calibration factors, the sensor did appear to measure hydrogen concentration fairly accurately at 10 ppmv over several days of data collection. However, like the high calibration factors, this accuracy could not be maintained. In subsequent testing, readings were low, about 25 percent of the expected value, and the DH analyzer was repeatedly tested for leaks by placing the system under pressure and under vacuum and monitoring any changes in the pressure or vacuum readings over time. Although some minor leaks were found, the readings did not improve and calibration factors remained low.

Several new HS85 sensors were tested in the DH analyzer. The HS85 sensors were not consistent from sensor to sensor. Different sensors had different baselines and different responses to hydrogen exposure.

At this point testing was stopped on the HS85 sensor for the following reasons:

- Pre-conditioning of the HS85 sensor with hydrogen affected response similar to the CWRU sensors
- The HS85 was easily deactivated by trace amounts of oxygen
- Sensor response varied from batch to batch
- Sensor response varied from day-to-day

The TGS821 sensor was tested with several membranes and/or coatings over the sensor to see if a selective barrier could prevent methane from contacting the sensor while allowing hydrogen to diffuse through the membrane. The sensor was tested on the bench under gas streams with and without methane. All membranes and coatings tested were not effective in blocking methane.

The sensors were then tested for calibration factor consistency and hydrogen concentration measurement accuracy. Sensors were then tested for their ability to measure DH in distilled water. As before, the DH concentration was also measured using the bubble strip method so the DH analyzer results could be compared. Data from these tests are presented in Figure 3-13. Based on these results, the Figaro TGS821 hydrogen sensor was selected for use in the demonstration at NAS Pensacola. This sensor was selected even though it was demonstrated to be susceptible to interferences from gases such as methane. An objective of the demonstration at NAS Pensacola was to determine the severity of these interferences under field conditions.

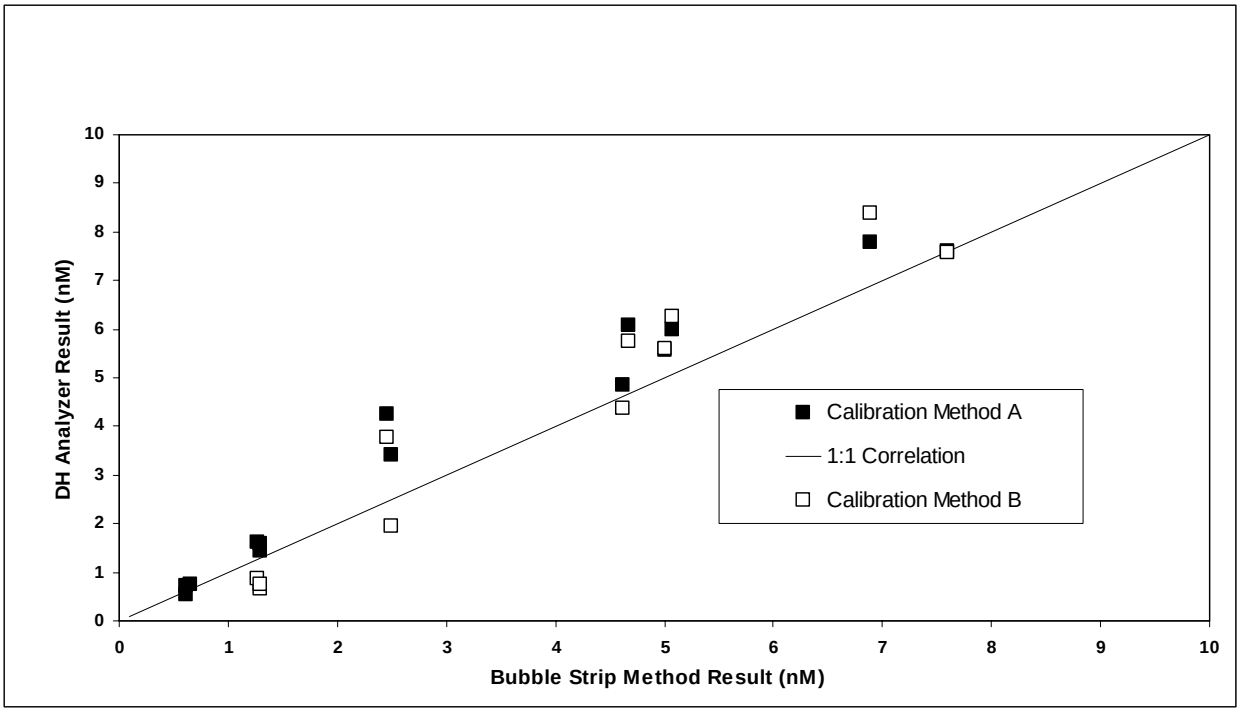

Figure 3-13. Bubble Strip Method Results vs. DH Analyzer Results for Distilled Water Samples

3.4.2 Gas-Liquid Equilibration Optimization

Several GLE configurations were tested and assessed for suitability including:

- Hollow fiber module
- Spray nozzle
- Sparger
- Venturi
- Static mixer

The optimal GLE design consisted of a "J" shaped poly vinyl chloride (PVC) vapor lock with a sprayer. The PVC tubing was standard plumbing stock acquired from a local hardware store. The sprayer nozzle was obtained from McMaster Carr and had a 60-degree spray pattern and was designed for low flow conditions. Locations of inlet and outlet ports maximized gas flow through the GLE device and water spray while minimizing the chances of water or excessive water vapor entering the DH analyzer.

3.4.3 Elimination of Parts That Generated Hydrogen

During the GLE testing, it became clear that there were many materials that could generate hydrogen when exposed to water or water vapor in a gas stream. The most common material was anodized aluminum. The following changes were made to the DH analyzer Prototype IV to eliminate this problem.

- **Some fittings had metal parts**. Fittings manufactured by Festo that contained metal parts were replaced with all plastic fittings wherever possible. Anodized aluminum was replaced by stainless steel, which did not generate hydrogen.

- **Pump diaphragm was aluminum and generated hydrogen when exposed to moisture**. The pump was replaced with one with a stainless steel, plastic-coated diaphragm.

- **Solenoid valves had aluminum parts that generated hydrogen when exposed to moisture.** The valves were replaced with solenoids from Fabco Air Inc. (part # CAN00054) that had stainless steel internal parts.

3.5 Testing and Evaluation Plans

3.5.1 Demonstration Installation and Start-Up

Two persons from CDM were on site during each demonstration. Startup responsibilities included well sampling and operation of the DH analyzer. Dr. Frank Chapelle of the USGS was on site at Site 3 for completion of confirmatory analyses. Site-specific security procedures were determined and followed at all sites. Figures 3-14 through 3-16 show maps and monitoring well locations for each of the three demonstration sites.

Upon arrival at each site, the DH analyzer was inspected to determine if damage had occurred during shipment. A calibration run was then performed to ensure proper operation. Compressed nitrogen required for the reduction gas analyzer was obtained from a local gas supply vendor. The DH analyzer and groundwater sampling pump operated off 12 VDC using a cigarette lighter adapter in the vehicle being used on site. The reduction gas analyzer required 120 volts AC.

3.5.2 Period of Operation

The periods of DH analyzer field measurements were as follows:

- Site 1 – SUBASE Bangor: January 22 to February 2, 2001
- Site 2 – Fort Lewis: February 19 to March 2, 2001
- Site 3 – Pensacola NAS: April 29 to May 3, 2002

3.5.3 Amount/Treatment Rate of Material to Be Treated

Since this demonstration involved a site characterization method (not a remedial technology), this subsection is not applicable.

3.5.4 Residuals Handling

Operation of the DH analyzer does not result in the generation of any residuals that require special handling or disposal. Groundwater that was analyzed was collected and disposed of in accordance with the Sampling Plan procedures for each site.

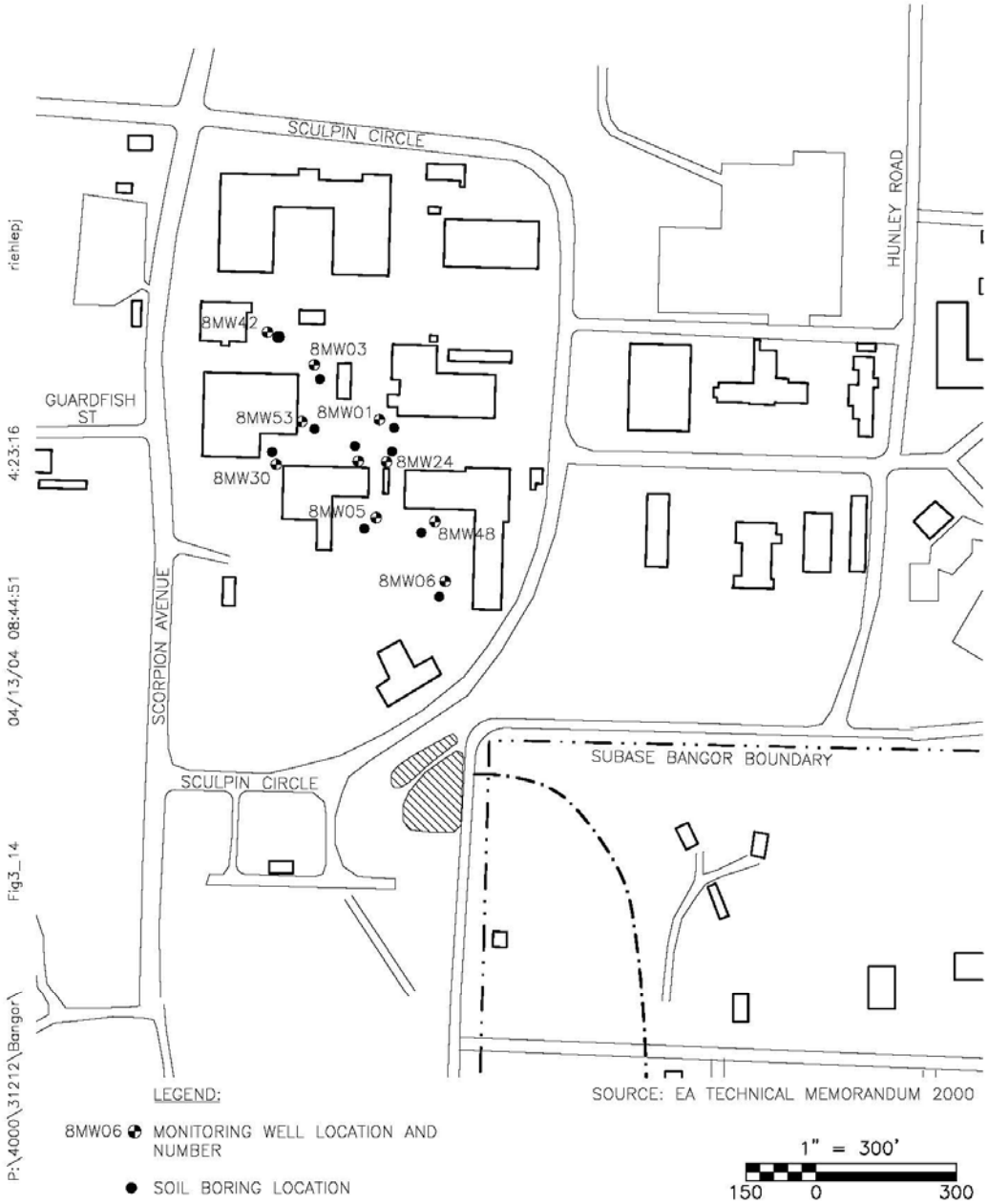

P:\4000\31212\Bangor\ Fig3_14 04/13/04 08:44:51 4:23:16 riehlepj

SUBASE BANGOR
SILVERDALE, WASHINGTON

Figure No. 3.14
Sample Collection Points

CDM

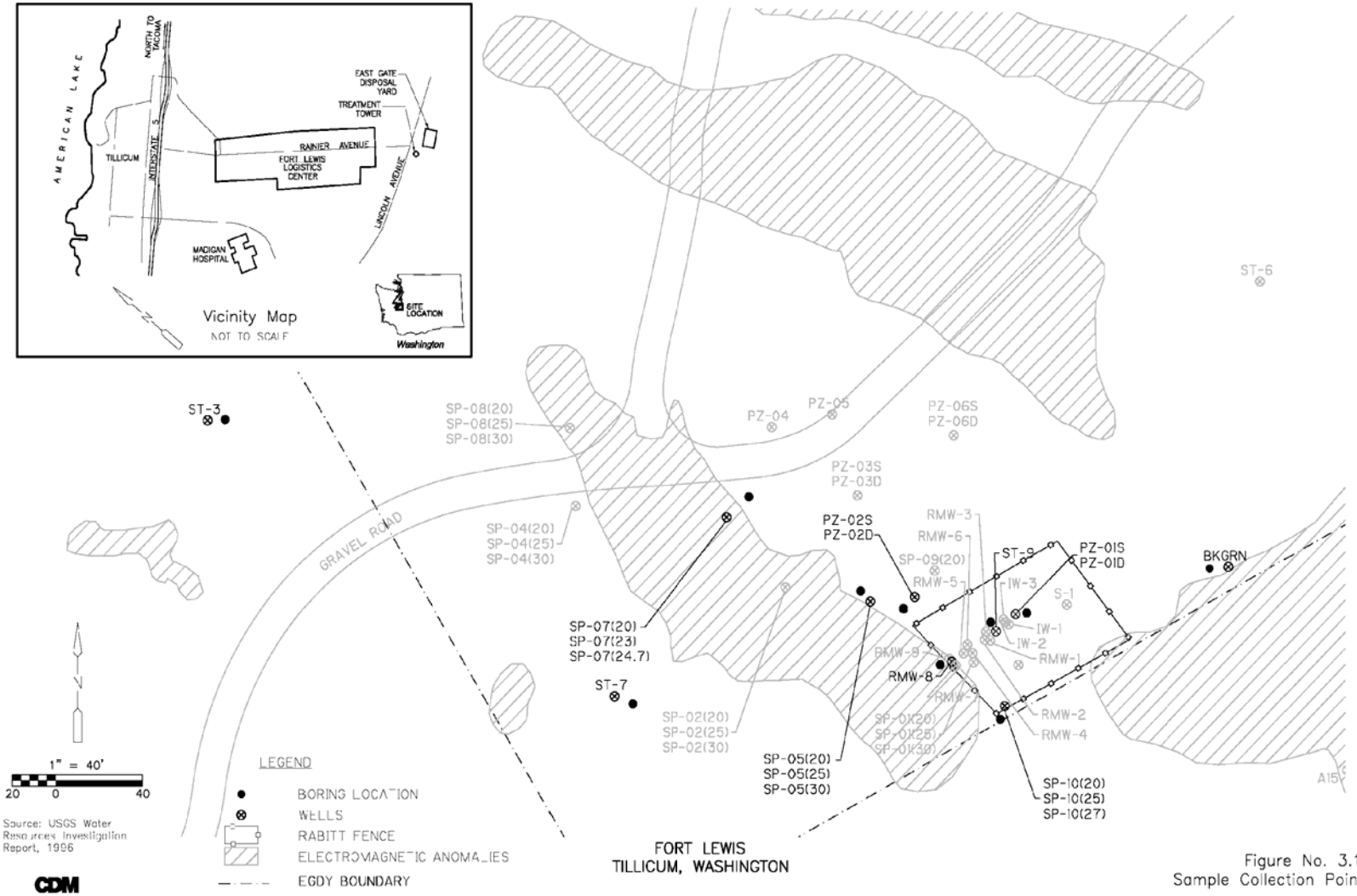

Figure No. 3.15
Sample Collection Points

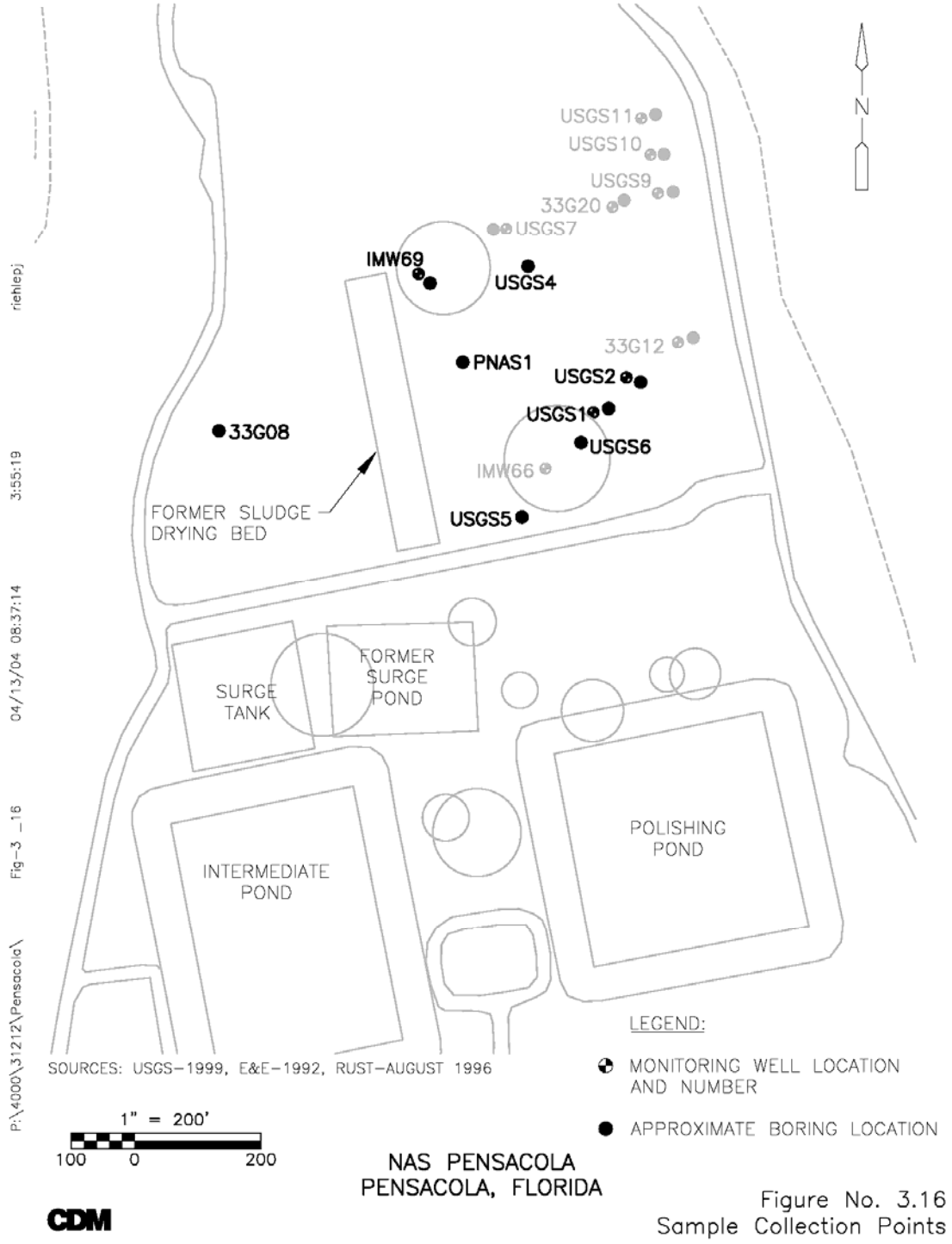

Figure No. 3.16
Sample Collection Points

3.5.5 Operating Parameters for the Technology

As previously described, the DH analyzer was operated in a flow-through mode, with groundwater pumped from the monitoring well through the analyzer so that the gas in the GLE device could reach equilibrium with the groundwater. The flow-through mode was also used with the bubble-strip method. Details concerning the bubble-strip method are provided in Appendix A.

3.5.6 Experimental Design

To evaluate the performance objectives listed in Table 3-1, the three site demonstrations followed the experimental design described in the Demonstration Plan. Well sampling for DH analysis began by measurement of water level in the subject monitoring well using an electronic sounder. Then tubing connected to either a bladder or peristaltic pump was lowered into the subject monitoring well. In wells that already contained sampling tubes, the intake to the sampling pump was connected to the sampling tube. The sampling pump was typically operated at a flow rate between 200 and 1,000 mL/min and discharged into a 5-gallon bucket. Field parameters (i.e., pH, temperature, dissolved oxygen, Eh, and specific conductivity) were monitored using a Hydrolab™. Once these parameters were stable, the bubble strip/reduction gas detection method was used to measure the DH concentration. The DH analyzer was connected to the discharge of a second sampling pump and operated in parallel with the bubble strip method.

At each of the three demonstration sites about 10 monitoring wells were measured for DH. Wells were selected based upon an evaluation of site conditions to provide a wide range of anticipated DH concentrations. Measurements using the bubble strip/reduction gas detection method and the DH analyzer were repeated up to four times at several wells.

3.5.7 Sampling Plan

Sample Collection

In general, groundwater samples were collected from existing monitoring wells on each site using low flow techniques and a peristaltic and /or bladder pump system. A total of about 10 wells per site were evaluated for DH using the DH analyzer and bubble-strip method. Generally, groundwater was pumped at a rate between 0.2 and 1.0 L/min into the DH analyzer to measure dissolved hydrogen. The bubble-strip method with reduction gas detection was conducted for verification. Two sample pumps were operated at each well and at the same rate. One pump was used for the bubble strip method and the other for the DH analyzer. Sampling was performed in accordance with the Quality Assurance Project Plan (QAPP) that is included as Appendix C.

Sample Analysis

The DH analyzer was used to measure DH in groundwater samples at each of the sites. The results of the DH analyzer were compared against the standard bubble-strip method. Validation of the DH analyzer depends on comparable results to the bubble-strip method DH measurements. CDM was responsible for operation of the DH analyzer. CDM performed the bubble strip method at SUBASE Bangor and Ft Lewis. Dr. Frank Chapelle of USGS assisted in performing

the bubble-strip method and evaluating DH results at Pensacola NAS. Analyses were performed in accordance with the QAPP.

The following paragraphs summarize the sample locations and analyses at each of the three demonstration sites. Daily field report forms and field data forms are given for all three sites in Appendix B. Results are evaluated for all sites in Section 4.3

Site 1 - SUBASE Bangor – The Bangor demonstration started on January 22, 2001. A day-by-day summary of the demonstration is given below:

- January 22. Dr. Pat Evans and Lisa Nickens of CDM arrive at site and meet with site representative Mick Butterfield. Fixed calibration problems and began pumping at 8MW06.
- January 23. Used new peristaltic pump for sampling at 8MW06. Fixed cartridge filter leaks. Flow rate from well was 0.4 L/min. Took two measurements at 8MW06.
- January 24. Took measurements at 8MW48 and MW5 using flow rate of 0.45 L/min.
- January 25. Took measurements at 8MW24, 8MW47, 8MW30, and 8MW53.
- January 26. Took measurements at 8MW03 and MW03.
- January 30 and 31 Fixed several problems that were causing calibration difficulties.
- February 1. Took measurements at 8MW30 (three DH analyzer runs and one bubble strip method)
- February 2. Took measurements at 8MW30 again and then at 8MW42

Site 2 - Ft Lewis – The Ft. Lewis demonstration was performed by Pat Evans and Lisa Nickens of CDM beginning on February 19, 2001. Using methane adsorbents Carboxen 1000/Carbosieve III.

- February 19. Fixed calibration problems.
- February 20. Repaired leaks and fixed calibration problems.
- February 21. Took measurements at SP5
- February 22. Took measurements at SP7, a background well, PZ 2D, and SP10
- February 23. Took measurements at PZ 1D, ST7, ST9, MW9, and ST3

Site 3 - NAS Pensacola – Dr. Pat Evans and Mary Trute of CDM and Dr. Frank Chapelle of the USGS were onsite beginning May 1, 2002. Dr. Chapelle performed the bubble method analyses as a part of a double blind test of the DH analyzer.

- May 1. Took measurements at PCI-1, USGS-5, 33G101, USGS2, USGS1, and 33G08
- May 2. Took measurements at SMW8, RW5, 1MW69, and USGS4

Experimental Controls
Control measurements for the DH analyzer involved operation with nitrogen gas and a calibration standard instead of water. Nitrogen gas was used to simulate a method blank that should have had no DH. A 10-ppmv hydrogen in nitrogen standard was used to calibrate the DH analyzer. The calibration gas was NIST traceable.

Data Quality Parameters
At each well location measures were taken to ensure that groundwater of similar quality was measured by the two DH methods (i.e., that the groundwater measured by each method had very similar DH concentrations). These measures included operation of dual sampling pumps simultaneously at each well and at the same flow rate. The intake to each pump was also placed at the same depth below ground surface.

Data Quality Indicators
The primary data quality indicators used to evaluate the DH analyzer performance were:

- A high (close to a value of 1.0 which is a perfect correlation) correlation coefficient (r^2) with the bubble strip results.

- A low coefficient of variation (CV) between DH analyzer results and bubble strip results. CV was defined as the standard deviation divided by the mean.

Calibration Procedures, Quality Control Checks, and Corrective Action
The DH analyzer was calibrated prior to taking measurements at each monitoring well. Calibration factors were indicated on the analyzer's display following each calibration. Calibration factors expressed in mV/sec were used at SUBASE Bangor and Ft. Lewis and represented the sensor voltage rate of change during the calibration period. Following further DHA development, calibration factors were expressed in mV at NAS Pensacola and represented the total voltage change during the calibration period. While calibration factors varied from sensor to sensor, experience with the TGS821 sensors allowed CDM to identify what constituted an unusually low factor. Normal calibration factors ranged from about 9 to 15 mV/sec and 1,600 to 3,900 mV over a 3-minute calibration period. Such a factor typically indicated presence of a leak in the DH analyzer, which was identified and repaired. Once a normal calibration factor was obtained, the calibration was repeated to obtain reproducible calibration factors prior to conducting testing at a well.

3.5.8 Demobilization

Demobilization activities at each site were minimal, consisting of preparing the DH analyzer for transport, managing waste groundwater, and securing all monitoring wells used during the demonstration.

3.6 Selection of Analytical/Testing Methods

The bubble-strip method (Appendix A) with reduction gas analyzer detection is considered to be the standard method for DH analysis and was used to verify the DH analyzer results.

3.7 Selection of Analytical/Testing Laboratory

Performance verification for the DH analyzer was conducted in the field using the bubble-strip method in combination with a reduction gas analyzer. Thus, no analytical laboratory was required.

4.0 Performance Assessment

4.1 Performance Criteria

Performance criteria that were used to evaluate the performance of the DH analyzer are given in Table 4-1. The performance criteria have been categorized as primary criteria (the project's performance objectives), or secondary criteria.

Table 4-1: Performance Criteria

Performance Criteria	Description	Primary or Secondary
Sample Throughput	Low analysis time relative to bubble strip method	Primary
Mechanical Reliability	Low incidence of mechanical failure	Primary
Versatility	Acceptable performance at all three demonstration sites	Primary
Ease of Use	Minimal user training required	Primary
Accuracy	Correlation between DH analyzer results and bubble strip method results	Primary
Precision	Low coefficient of variation amongst replicate analyses	Primary
Sensitivity	Detection limit for DH <0.2 nM	Primary
Range	Accurate results between <0.2 and 10 nM DH	Primary
Hazardous Materials	Little or no hazardous material generated during use of analyzer	Secondary
Process Waste	Little of no process waste generator during analyzer use	Secondary
Factors Affecting Technology Performance	Few interferences and accurate operation possible over a wide range of groundwater quality and field conditions	Secondary
Maintenance	Easily kept in operating order with infrequent part replacement	Secondary
Scale-Up Constraints	Can analyzer be easily produced commercially	Secondary

4.2 Performance Confirmation Methods

The primary method of evaluating the DH analyzer's performance was to determine the correlation between the analyzer results and bubble strip method results for samples that were co-located from the same well. However, other methods, metrics, and criteria were used to evaluate performance of the analyzer. Table 4-2 presents a summary of these and lists them as either primary criteria (performance objectives) or secondary criteria. Within these two categories, the criteria are further divided as being qualitative or quantitative.

Table 4-2: Expected Performance and Performance Confirmation Methods

Performance Criteria	Expected Performance Metric (pre-demonstration)	Performance Confirmation Method	Actual (post-demonstration)
PRIMARY CRITERIA (Performance Objectives) (Qualitative)			
Sample Throughput	Equal to or better than bubble strip method	Experience from demonstration operation	Analysis time similar to bubble strip method (~1 hour)
Mechanical Reliability	Low breakdown incidence	Experience from demonstration operation	Further development needed to improve mechanical reliability
Versatility	Applicability to all demonstration sites	Comparison of results from different sites and laboratory testing	Further development needed for the hydrogen sensor to improve versatility through reduction in interfering dissolved gases
Ease of Use	Operator training and labor required similar to other field equipment	Comparison to operator requirements for other commonly used field instruments	Ease of operation similar to other field instruments, although calibration could be simplified.
PRIMARY CRITERIA (Performance Objectives) (Quantitative)			
Accuracy	Percent error < 10 percent $r^2 > 0.9$	Correlation with bubble strip/reduction gas analyzer reference method.	Accuracy was highly dependent on types and amounts of interfering gases. Site 1 $r^2 = 0.80$; Site 2 $r^2 = 0.24$; Site 3 $r^2 = 0.01$

Table 4-2: Expected Performance and Performance Confirmation Methods (cont.)

Performance Criteria	Expected Performance Metric (pre-demonstration)	Performance Confirmation Method	Actual (post-demonstration)
Precision	CV for DH analyzer equal to or less than CV for reference method	CV between replicates taking into account best CV attained with the bubble strip/reduction gas analyzer reference method.	Average CVs: Site 1 – 34% for DH analyzer and 67% for reference method Site 2 – 64% for DH analyzer and 34% for reference method Site 3 – 20% for DH analyzer and 17% for reference method Overall, CVs similar to reference method.
Sensitivity	Detection limit for DH < 0.2 nM	Detection of DH concentrations less than 0.2 nM as determined by bubble strip/reduction gas analyzer reference method.	Detection limit for DH < 0.2 nM when no interferences presence.
Range	> 10 nM	Ability to quantify DH concentrations greater than 10 nM as determined by bubble strip/reduction gas analyzer reference method.	> 10 nM when no interferences present.
SECONDARY PERFORMANCE CRITERIA (Qualitative)			
Hazardous Materials	No hazardous materials produced	Evaluate materials needed for operation	No hazardous materials produced
Process Waste	No process waste produced	Observation	No process waste produced. Very small amounts of spent MGC, Carulite, molesieve are produced.

Table 4-2: Expected Performance and Performance Confirmation Methods (cont.)

Performance Criteria	Expected Performance Metric (pre-demonstration)	Performance Confirmation Method	Actual (post-demonstration)
Factors Affecting Performance ▪ throughput ▪ groundwater quality	▪ analysis time ≤1 hr ▪ no interferences under typical groundwater conditions	▪ time/sample analysis ▪ performance not affected by groundwater quality	▪ analysis time ≤ 1 hr ▪ other dissolved gases interfered with DH analysis
Maintenance	Maintenance requirements similar to other field instruments (gas and filter replacement)	Comparison of field records to operator requirements for other commonly used field instruments	Gas and filter replacement are primary maintenance requirements (i.e., not dissimilar to other field instruments)
Scale up Constraints	No commercialization constraints	Investigate ability to easily produce commercially	Likely no commercialization constraints except relatively small market; however, depends on further development results and hydrogen sensor used

4.3 Data Analysis, Interpretation, and Evaluation

Results of the DH analyzer and the bubble strip method are summarized in Tables 4-3, 4-4, and 4-5 for Sites 1, 2, and 3, respectively. The DH analyzer results are plotted against results of the bubble strip method for Sites 1, 2, and 3 in Figures 4-1, 4-2, and 4-3, respectively. The correlation coefficients for the two methods for Sites 1, 2, and 3 were 0.80, 0.24, and 0.01, respectively. The variability of correlation of the DH analyzer results to bubble strip method results has been determined to be most likely due to interferences from dissolved gases (primarily methane and H_2S) in the groundwater analyzed. Specifically, the ability of the various hydrogen sensors tested to accurately measure gaseous hydrogen was negatively impacted by the presence of other gases that partitioned from groundwater in the GLE device. For example, Figure 4-1 indicates a data point for a well that had historic dissolved methane. The sensor is sensitive to methane and thus the high DHA result is likely attributable to this interference. Much but not all of the poor correlation in Figure 4-3 was attributed to operator error or high sulfide concentrations in groundwater. A direct correlation between error and sulfide concentration was not evident. Sulfide did not completely explain the poor correlation and other possible interferences or sensor instabilities likely exist.

Table 4-3: Summary of Dissolved Hydrogen Results for Site 1 – SUBASE Bangor

Date/Time	Well	Run	DHA Result (nM)	CV (%)	GLE Result (nM)	CV (%)	BS Result (nM)	CV (%)
1/23/2001 11:20	8MW06	1	3.97		1.95		1.45	
1/23/2001 13:10	8MW06	2	3.04		2.21		2.06	
1/23/2001 14:52	8MW06	3	1.87	36%	2.21	7%	1.59	19%
1/24/2001 9:36	8MW48	1	11.0		9.90		7.60	
1/24/2001 12:11	MW05	1	17.9		16.6		9.92	
1/24/2001 15:39	MW05	2	9.24	45%	3.94	87%	4.37	55%
1/25/2001 7:33	8MW24	1	10.2		8.70		10.9	
1/25/2001 10:20	8MW47	1	3.18		2.05		2.30	
1/25/2001 12:45	8MW30	1	26.0		15.0		20.2	
1/25/2001 16:55	8MW53	1	19.0		11.9		12.8	
1/26/2001 7:54	8MW42	1	1.37		1.13		0.450	
1/26/2001 11:58	MW03	1	16.7		1.14		1.07	
1/26/2001 15:21	28MW01	1	9.30		4.22		6.52	
2/1/2001 15:35	8MW30	2	37.0		18.7		1.1	127%
2/1/2001 16:45	8MW30	3	27.3		13.3		1.1	
2/1/2001 17:32	8MW30	4	23.4	21%	9.54	27%	1.1	NA

Notes

nM - nanomolar

NA - Data Not Available

GLE - Gas Liquid Equilibrator on the DHA

BS - Bubble Strip/Trace Reduction Gas Detector (RGD)

CV - Coefficient of variation defined as standard deviation divided by the mean

Table 4-3: Summary of Dissolved Hydrogen Results for Site 1 – SUBASE Bangor (cont.)

Date/Time	Well	Run	DHA-GLE % Diff	DHA-BS % Diff	GLE Equil Time (min)	BS Equil. Time (Min)	Comment
1/23/2001 11:20	8MW06	1	104	174	14	<49	
1/23/2001 13:10	8MW06	2	37.6	47.6	17	NA	
1/23/2001 14:52	8MW06	3	-15.3	17.6	NA	NA	
1/24/2001 9:36	8MW48	1	10.8	44.3	27	64	
1/24/2001 12:11	MW05	1	7.83	80.4	NA	86	
1/24/2001 15:39	MW05	2	135	111	12	12	
1/25/2001 7:33	8MW24	1	16.8	-6.55	27	29	
1/25/2001 10:20	8MW47	1	54.8	38.1	19	60	
1/25/2001 12:45	8MW30	1	73.4	28.5	33	15	
1/25/2001 16:55	8MW53	1	59.5	48.6	10	20	
1/26/2001 7:54	8MW42	1	21.2	204	55	55	
1/26/2001 11:58	MW03	1	1365	1461	30	10	Historical dissolved methane
1/26/2001 15:21	28MW01	1	120	42.6	NA	NA	
2/1/2001 15:35	8MW30	2	97.8	NA	NA	NA	
2/1/2001 16:45	8MW30	3	105	NA	NA	NA	
2/1/2001 17:32	8MW30	4	145	NA	NA	NA	

Notes

nM - nanomolar

NA - Data Not Available

DHA - Dissolved Hydrogen Analyzer

GLE - Gas Liquid Equilibrator on the DHA

BS - Bubble Strip/Trace Reduction Gas Detector (RGD)

CV - Coefficient of variation defined as standard deviation divided by the mean

Table 4-4: Summary of Dissolved Hydrogen Results for Site 2 – Ft. Lewis

Date/Time	Well	Run	DHA Result (nM)	CV (%)	GLE Result (nM)	CV (%)	BS Result (nM)	CV (%)
2/19/2001 13:46	BKGD WELL	1	0.057		NA		0.08	
2/19/2001 14:40	BKGD WELL	2	0.085		NA		0.08	
2/22/2001 7:54	BKGD WELL	3	NA		0.15		0.08	
2/22/2001 9:16	BKGD WELL	4	0.038	39%	0.16	4%	0.10	14%
2/23/2001 9:54	MW9	1	1.33		1.31		2.90	
2/23/2001 15:00	PZ1	1	201		NA		23.6	
2/23/2001 16:00	PZ1	2	144	23%	NA	NA	23.6	NA
2/22/2001 12:02	PZ2D	1	NA		NA		0.88	
2/22/2001 12:28	PZ2D	2	1.46	NA	0.60	NA	0.88	NA
2/22/2001 16:42	SP07	1	0.303		0.36		0.29	
2/22/2001 14:52	SP10	1	0.019		0.19		0.17	
2/22/2001 16:07	SP10	2	0.158	111%	0.19	1%	0.17	NA
2/21/2001 12:30	SP5	1	0.632		1.40		1.16	
2/21/2001 15:07	SP5	2	0.574		0.49		0.55	
2/21/2001 16:15	SP5	3	0.427		0.44		0.45	53%
2/19/2001 15:44	SP5	4	0.471	18%	NA	69%	0.45	
2/19/2001 16:40	SP5	5	0.129		NA		0.45	
2/23/2001 8:40	ST3	1	0.206		0.44		0.14	
2/23/2001 13:40	ST7	1	0.521		NA		0.38	
2/23/2001 10:55	ST9	1	1.29		NA		41.2	
2/23/2001 11:30	ST9	2	NA		NA		NA	
2/23/2001 12:00	ST9	3	31.4	130%	NA	NA	41.2	NA

Notes

DHA - Dissolved Hydrogen Analyzer

GLE - Gas Liquid Equilibrator on the DHA

BS - Bubble Strip/Trace Reduction Gas Detector (RGD)

nM - nanomolar

NA - Data Not Available

CV - Coefficient of variation defined as standard deviation divided by the mean

Table 4-4: Summary of Dissolved Hydrogen Results for Site 2 – Ft. Lewis (cont.)

Date/Time	Well	Run	DHA-GLE % Diff	DHA-BS % Diff	GLE Equil Time (min)	BS Equil. Time (Min)	Comment
2/19/2001 13:46	BKGD WELL	1	NA	-30.1	NA	NA	
2/19/2001 14:40	BKGD WELL	2	NA	4.8	NA	NA	
2/22/2001 7:54	BKGD WELL	3	NA	NA	41	57	Electrical problem, controller shut off
2/22/2001 9:16	BKGD WELL	4	-76.6	-63.1	40	40	
2/23/2001 9:54	MW9	1	1.48	-54.3	20	20	
2/23/2001 15:00	PZ1	1	NA	749	45	30	
2/23/2001 16:00	PZ1	2	NA	508.1	10	NA	
2/22/2001 12:02	PZ2D	1	NA	NA	NA	24	Electrical problem, controller shut off
2/22/2001 12:28	PZ2D	2	143	66.3	20	NA	GLE flooded prior to this run, catalyst was wet
2/22/2001 16:42	SP07	1	-16.8	4.84	20	20	
2/22/2001 14:52	SP10	1	-90.0	-88.9	43	40	Catalyst wet after this run
2/22/2001 16:07	SP10	2	-17.2	-7.7	20	NA	
2/21/2001 12:30	SP5	1	-55.0	-45.7	78	73	
2/21/2001 15:07	SP5	2	16.0	3.48	51	48	
2/21/2001 16:15	SP5	3	-2.84	-6.01	32	30	
2/19/2001 15:44	SP5	4	NA	3.6	NA	NA	
2/19/2001 16:40	SP5	5	NA	-71.7	NA	NA	
2/23/2001 8:40	ST3	1	-52.8	46.0	20	20	
2/23/2001 13:40	ST7	1	NA	35.8	30*	30	
2/23/2001 10:55	ST9	1	NA	-96.9	35	20	Leak detected and repaired after this run. Effervescence
2/23/2001 11:30	ST9	2	NA	NA	NA	NA	Sensor response too quick, no response.
2/23/2001 12:00	ST9	3	NA	-23.7	NA	NA	Changed data collection delay from 10s to 1s.

Notes

DHA - Dissolved Hydrogen Analyzer

GLE - Gas Liquid Equilibrator on the DHA

BS - Bubble Strip/Trace Reduction Gas Detector (RGD)

nM - nanomolar

NA - Data Not Available

CV - Coefficient of variation defined as standard deviation divided by the mean

Table 4-5: Pensacola Naval Air Station Dissolved Hydrogen Results

Sample Date/Time	Well	Run	DHA Result (nM)	CV (%)	ABS (RPD)	BS Result (nM)	CV (%)	DHA-BS % Difference	Comment
5/1/2002 8:44	PCI-1	1	0.6146			0.2400		156%	
5/1/2002 9:24		2	0.6727	6.4%		0.1500	33%	348%	
5/1/2002 10:17	USGS-5	1	1.9164			0.3200		499%	
5/1/2002 10:59		2	1.6358	11%		0.2700	12%	506%	
5/1/2002 11:55	33G-101	1	18.6466			1.3800		1251%	
5/1/2002 12:32		2	19.6726	3.8%		1.7100	15%	1050%	
5/1/2002 13:23	USGS-2	1	18.6418			21.0400		-11%	Possible sheen in water.
5/1/2002 13:56		2	5.8026			20.7600		-72%	
5/1/2002 14:30		3	11.4406	54%		11.4000	31%	0%	Operator error with DHA resulted in water being drawn into instrument.
5/1/2002 15:10	USGS-1	1	22.6600			0.3600		6194%	Possible malfunction due to previous operator error.
5/1/2002 15:45		2	22.5800	0.3%		0.2700	20%	8263%	Possible malfunction due to previous operator error.
5/1/2002 17:12	33G08	1	19.9968			0.4700		4155%	Possible malfunction due to previous operator error.
5/1/2002 16:35		2	16.9189	12%		0.5600	12%	2921%	Possible malfunction due to previous operator error.
5/2/2002 8:30	SMW-8	1	9.9779			2.3100		332%	Replaced sensor in DHA.
5/2/2002 9:03		2	9.9182	0.4%		2.8300	14%	250%	
5/2/2002 9:45	RW-5	1	3.7703			0.8300		354%	
5/2/2002 10:19		2	2.0120	43%		1.2400	28%	62%	
5/2/2002 11:13	IMW-69	1	2.7258			1.3800		98%	DHA lost power. Recalibrated prior to this run.
5/2/2002 11:46		2	2.6095	3.1%		1.3900	0.5%	88%	
5/2/2002 12:30	USGS-4	1	14.4373			3.2700		342%	
5/2/2002 13:26		2	5.4973			3.4600		59%	DHA lost power. Recalibrated prior to this run.
5/2/2002 14:11		3	4.0572	70%		3.5900	5%	13%	

Notes

DHA - Dissolved Hydrogen Analyzer

BS - Bubble Strip/Trace Reduction Gas Detector (RGD)

NA - Data Not Available

nM - Nanomolar

CV - Coefficient of variation defined as standard deviation divided by the mean

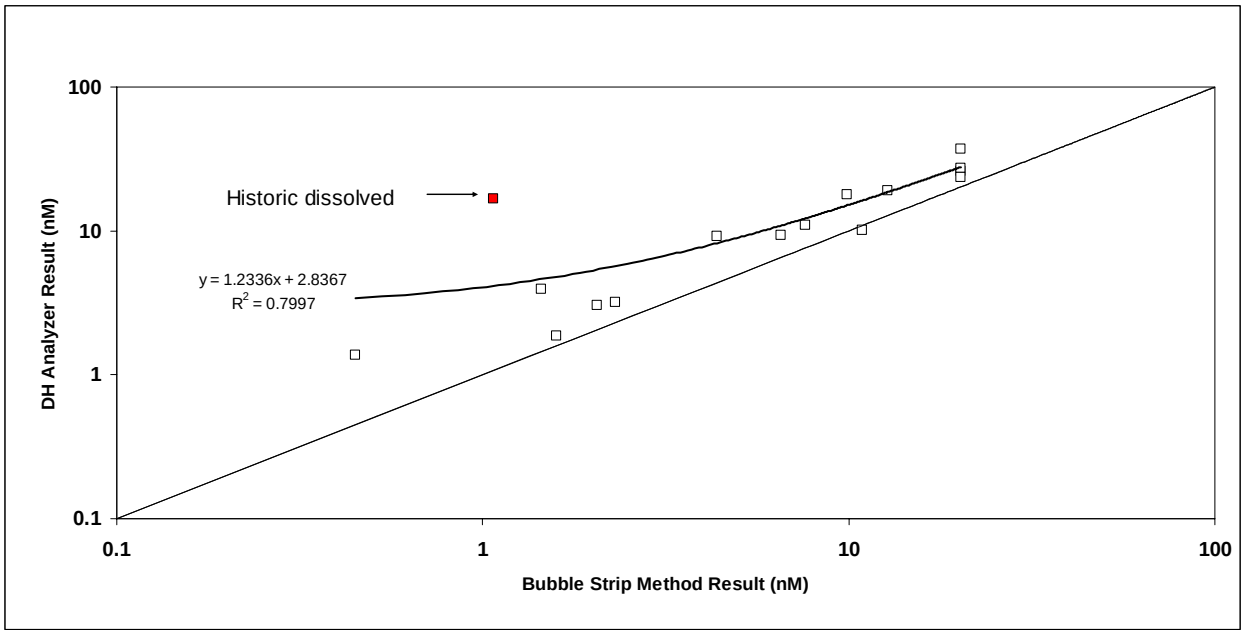

Figure 4-1. Site 1 (SUBASE Bangor) Dissolved Hydrogen Data

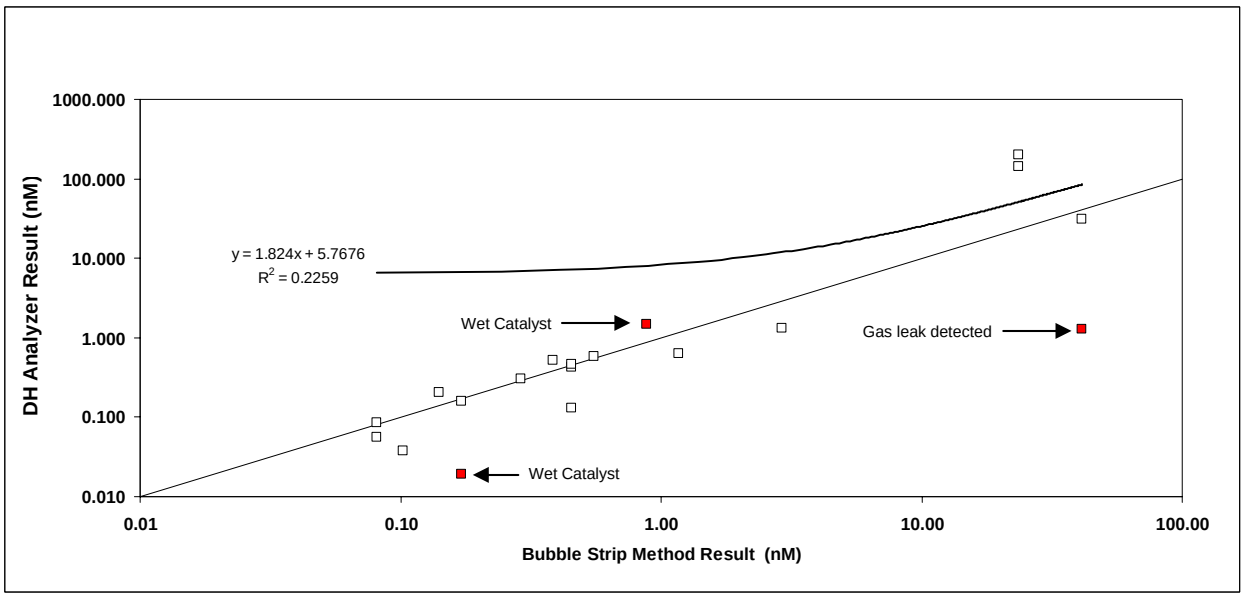

Figure 4-2. Site 2 (Ft. Lewis) Dissolved Hydrogen Data

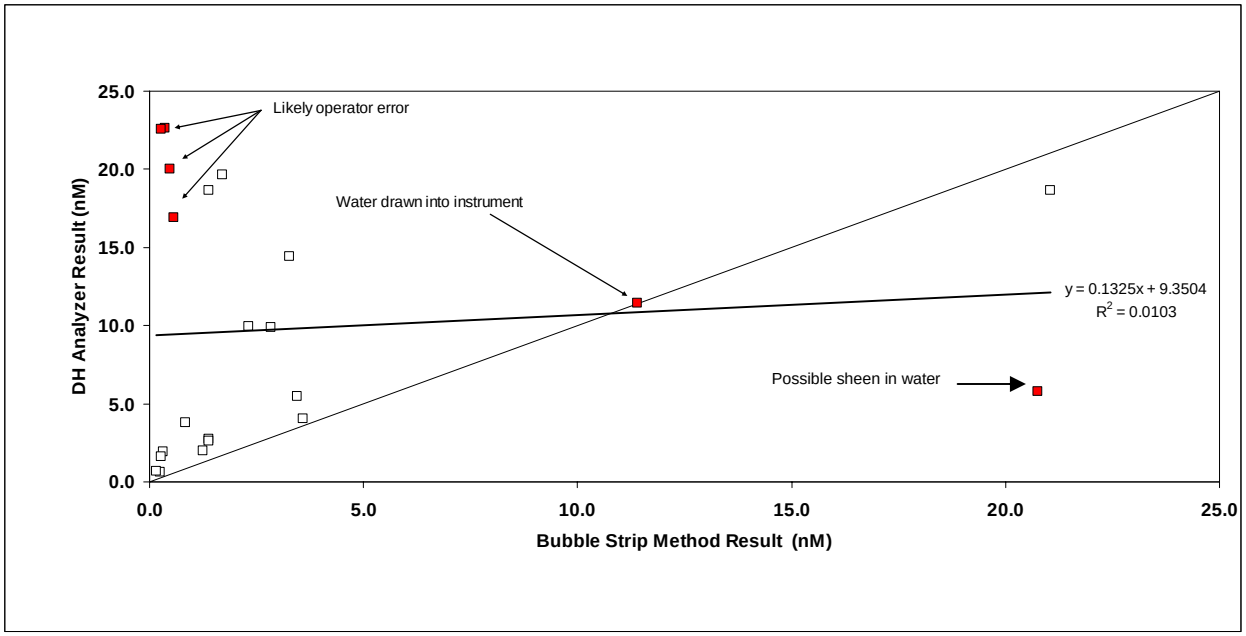

Figure 4-3. Site 3 (NAS Pensacola) Dissolved Hydrogen Results

Similarly, Tables 4-3 and 4-4 indicate high percent differences between the DHA and GLE results. The GLE concentrations were measured by sampling gas from the GLE using a syringe and injecting the sample into the reduction gas analyzer. Thus the GLE result is indicative of the true gaseous hydrogen concentration to which the sensor was exposed. A high percent difference between the DHA and GLE results is indicative that the sensor is being affected by factors other than the hydrogen concentration. The tables indicate that the BS and GLE results are in reasonable agreement with the exception of sample 8MW30 at SUBASE Bangor. The general agreement indicates that the GLE was capable of effectively equilibrating dissolved hydrogen with the carrier gas in the DHA. The reason for the variance observed at 8MW30 is uncertain. Precision of the DHA was comparable to the bubble strip reference method.

The interference of other dissolved gases impacted how the DH analyzer performed against several performance criteria, including accuracy, precision, sensitivity, and range. It is evident that further investigation into and testing of hydrogen sensors is required for the DH analyzer to be a reliable field instrument. Additionally, the viability, or lack thereof, of the DH analyzer could not be demonstrated at this time because of poor precision (e.g., coefficient of variation of 17 to 67 percent) of the standard reference method (i.e., the bubble strip method). Since further development of the DH analyzer was beyond the scope of the ESTCP demonstration, evaluation of the current configuration of the DH analyzer was discontinued after Site 3 (NAS Pensacola).

4.4 Publication of Results

Publications associated with the DH analyzer are provided in Section 7.

5.0 Cost Assessment

5.1 Cost Reporting/Analysis

Given the developmental requirements of the DH analyzer before it can be commercialized and at ESTCP's direction (Email from Dr. Andrea Leeson to Carmen A. Lebrón dated December 12, 2003), no costs for its use have been developed at this time. Nevertheless, Appendix I presents a list of DH analyzer parts and costs for reference. Appendix I also contains the U.S. patent for the DH analyzer.

6.0 Implementation Issues

6.1 Environmental Checklist

No permits would be needed to operate the DH analyzer. Appropriate permits for well installation would be required if wells are installed to measure DH.

6.2 Other Regulatory Issues

Dissolved hydrogen is referenced in the EPA technical guidance on MNA of chlorinated solvents (EPA 1998). Analysis of this analyte is not required at this time, and is considered optional by regulatory agencies. Additionally, no field method for DH measurement has been approved by any regulatory agency, including the bubble strip method.

With respect to execution of this project, minimal regulatory involvement was needed since this was a demonstration of analytical techniques and not of a remediation technology. Drilling permits were obtained as required by registered drillers under subcontract to CDM.

6.3 End-User Issues

The main end-user (technical staff working on characterizing DoD sites) issue regarding use of a DH analyzer is "Will this instrument provide results that are comparable to those from the reference method?" Since the demonstration results indicated that the DH analyzer results did not correlate well with the bubble strip method, evaluation of implementation issues would be premature. Further investigation into finding and testing a hydrogen sensor that did not negatively respond to other dissolved gases would be needed before the DH analyzer could be further field demonstrated.

6.3.1 Future Development Needs

These demonstrations showed that while the DH analyzer is not yet ready for commercialization, with further development it can be a valuable tool for providing accurate field analyses of dissolved hydrogen. This further development needs to focus on:

- Modifying the existing hydrogen sensor or identifying a new sensor that is not sensitive to the dissolved gases that were found to interfere with DH detection in these demonstrations. Furthermore, increased sensor stability and lack of a need for preconditioning is necessary.
- Developing a system to detect leaks in the gas conveyance tubing/valving
- Improving mechanical stability
- Evaluating adsorbents capable of adsorbing hydrogen sulfide. The Carulite and molecular sieves used in the current DHA have some but insufficient hydrogen sulfide adsorption capacity. Alternative molecular sieves capable of adsorbing hydrogen sulfide are warranted. However, methane will likely still pose an interference problem and practical methane adsorbents do not exist. Thus identification of an alternative sensor is still necessary.

7.0 References

AGI Technologies. 1999. *Development of a Dissolved Hydrogen Analyzer and a Bioavailable Ferric Iron Assay.* Submitted to the Air Force Research Laboratory. October.

Battelle. 2000. *Technology Demonstration Plan: Reductive Anaerobic Biological* In Situ *Treatment Technology (RABITT) Treatability Testing at the East Gate Disposal Yard Site Fort Lewis, WA*. May.

Chapelle, F.H., D.A. Vroblesky. J.C. Woodward, and D.R. Lovley. 1997. *Practical Considerations for Measuring Hydrogen Concentrations in Groundwater*. Envir. Sci. Technol. 31: 2873 – 2877.

EA. 2000. *Final Site Specific Health and Safety Plan Monitoring Natural Attenuation Operable Unit 8 Submarine Base Bangor Washington.* October 30.

EPA. 2003. *Treatment Technologies for Site Cleanup: Annual Status Report, 11th Edition*. EPA-542-R-03-009.

EPA.1999. *Use of Monitored Natural Attenuation at Superfund, RCRA Corrective Action, and Underground Storage Tank Sites.* Final OSWER Directive 9200.4-17P, NTIS Order No. PB99 963 315. 39 pp.

EPA. 1998. *Technical Protocol for Evaluating Natural Attenuation of Chlorinated Solvents in Groundwater.* EPA/600/R-98/128. September.

Evans, P.J. 2001a. *Theory and Performance of a Field-Portable Dissolved Hydrogen Analyzer* In: Natural Attenuation of Environmental Contaminants (A. Leeson, M. Kelley, H.S. Rifai, and V.S. Mayar, eds.) Battelle Press, Columbus, OH pp. 199-206.

Evans, P.J. 2001b. *A Dissolved Hydrogen Analyzer and a Bioavailable Ferric Iron Assay for Bioremediation Analysis.* In: Proceedings of the Second International Conference and Industrial Exhibition: Field Screening Europe 2001 pp. 139-144.

Evans, P.J. 2001c. *Dissolved Hydrogen Analyzer* U.S. Patent No. 6,277,329

Evans, P.J., K.A. Jones, C.C. Liu, and D.R. Lovley. 1999. Development of a Natural Attenuation Test Kit In: Natural Attenuation of Chlorinated Solvents, Petroleum Hydrocarbons and Other Organic Compounds (B.C. Alleman and A. Leeson, eds.) Battelle Press, Columbus, OH pp. 189-194.

USGS. 1999. *Monitoring Plan for Natural Attenuation Remediation, Waste Water Treatment Plant, Pensacola, Florida.* December.

8.0 Points of Contact

POINT OF CONTACT Name	ORGANIZATION Name Address	Phone/Fax/email	Role in Project
Carmen A. Lebrón	NFESC Restoration Development Branch Code ESC411 1100 23rd Avenue Port Hueneme, CA 93043-4370	p) 805-982-1616 f) 805-982-4304 carmen.lebron@navy.mil	PI
Dr. Patrick Evans	CDM 11811 NE 1st St. Ste 201 Bellevue, WA 98005-3033	p) 425-453-8383 f) 425-646-9523 evanspj@cdm.com	Co-PI
Dr. Frank Chapelle	USGS 720 Gracern Road Ste 129 Columbia, SC 29210	p) 803-750-6116 f) 803-750-6181 chapelle@usgs.gov	Partner
Dr. Roger Olsen	CDM 1331 17th St. Ste 1200 Denver, CO 80202	p) 303-298-1311 f) 303-293-8236 olsenrl@cdm.com	Reviewer

Signature of Project Lead Date

Appendix A
Bubble Strip Method
for Analyzing Dissolved Hydrogen

Measurement of dissolved hydrogen (DH) is becoming more important in the evaluation of contaminated groundwater systems. Dissolved hydrogen is produced by fermentative microorganisms under anaerobic concentrations. Respiring microorganisms then utilize DH for use in terminal electron-accepting processes. This process involves reduction of terminal electron acceptors, such as CO_2, Fe (III), and sulfate (Chapelle 1997).

The bubble-strip method has been proven to be a valuable and reliable method to measure DH. The analysis generally takes 30 minutes. The method can also measure a wide range of different DH concentrations (Chapelle 1997).

The bubble-strip method is divided into two parts: (1) field sampling of wells and (2) laboratory analysis (EPA 1998). Groundwater is continuously pumped at a rate of about 500 milliliters per minute (mL/min) through a 250-mL gas-sampling bulb. Gas (20-mL bubble of H_2-free N_2) is then introduced into the sampling bulb through the septum. Over time, hydrogen is transferred from the liquid to the gas phase. Some refer to this as hydrogen being "stripped" from water. Equilibrium between the hydrogen in the liquid and gas phase is achieved over time. Once equilibrium has been established, a gas sample is taken and analyzed for hydrogen. The procedure generally takes 20 to 30 minutes (Chapelle 1997).

The gas sample is then analyzed for hydrogen by gas chromatography with a reduction gas detector (EPA 1998). Concentrations are then calculated from the following equations, assuming the DH concentration in the aqueous phase is in equilibrium with the gas phase (Chapelle 1997).

$$\mathbf{C_{aq} = 0.812\ C_{vap}}$$

Where C_{aq} is the aqueous concentration of DH in nanomolar (nM) and C_{vap} is the equilibrium vapor concentration of DH in ppm by volume.

The method should be used with a bladder, piston, or peristaltic pump. Use of a direct current driven submersible pump has the potential to generate DH and should not be used. In addition to different pumping systems, the method can also be affected by materials used in well construction (Chapelle 1997). Metallic well casings with can generate DH. This effect is not seen with DH concentrations measured from PVC wells (Chapelle 1997).

Appendix B
Daily Field Reports

CDM Camp Dresser & McKee Inc.

FIELD INVESTIGATION DAILY REPORT

Sheet 1 of

Project ESTCP — Project No. 4000-31212
Location SUBASE Bangor — Date 01/22/01
Equipment Rental ____ Company ____ To PJE
Equipment Hours ____ F.E. Time from: ____ to: ____ By LAN

0800 LAN + PJE onsite @ SUBASE Bangor to field test H Analyzer. Obtain badges
0900 Meet Rick Butterfield, drive to site. Conduct site walk to identify well locations
Begin equipment setup
Need to replace leaky valve on Nitrogen regulator

1055 Calibrate Dissolved Hydrogen Analyzer
Baseline 181. Step 5: values going down due to an leak.
~~Calibration factor~~ Analyzer leaking somewhere, find leak ~~and~~ by pushing fittings together inside analyzer
1135 Baseline 150
Stop calibration to check N and cal gas flow
Check N flow in vent labelled "activated C filter"
Needs to be 10 LPM
Check cal gas in right vent ~~of~~ labelled "H_2O absorbent
Needs to be 1.0 LPM
1140 Start calibration — Step 5 ⇒ numbers should be increasing as sensor is exposed to hydrogen
Step 2 ⇒ Sensor exposed to N; #s should go up but be stable

Tonight - metal corrugated pipe for tailpipe to route exhaust away from vehicle
Abort calibration in step 5 - #s back down
Change sensor, replace valves + tubing on sensor

Visitors:
Attachments — ☒ Continued
Distribution — Initial

rev 9/00 — forms\field\field investigation daily report.p65

CDM Camp Dresser & McKee Inc.

FIELD INVESTIGATION DAILY REPORT

Sheet 2 of ____

Project ESTCP | Project No. 4000-31212
Location SUBASE Bangor | Date 01/22/01
Equipment Rental ____ Company ____ | To PJE
Equipment Hours ____ F.E. Time from: ____ to: ____ | By LAN

1158 Baseline 230
44.5 mV at beginning of Step 4 (measured on Trace analyzer) Abort calibration, still seems to be a leak somewhere. Change cartridges out & use new cartridges made by Pat
1224 Baseline 55
Cal factor
Discard cartridges, use new ones made by Pat

44.1 mV at beginning Step 5
11.6 ppm H_2 in N_2 std.
1) 84.2 mV
2) 89.0 mV.

Stopped at 1200 mV - did not calibrate.
Recalibrate
1252 Cal factor 10.967
Calibration successful
Load up equipment and prepare to sample first well (8MW06
1318 Move to 8MW06. Calibrated Hydrolab
DTW = 25.33 ft bgs
Setup equipment but cannot get pumps to extract water from well. Pumps to small; H_2O level to far below ground. Call INW to rent paristaltic pump that can pump @ higher rate. Will begin sampling when pumps/tubing arrive (tomorrow)
Sales rep = Aeven, employee will deliver to Port Orchard tonight

Visitors:
Attachments ☒ Continued
Distribution Initial

rev 9/00 form s:\field\field investigation daily report.doc

CDM Camp Dresser & McKee Inc.

FIELD INVESTIGATION DAILY REPORT

Sheet 3 of

Project SUBASE Bangor - FSTOP
Project No. 4000-31212
Location BANGOR
Date 01/22/01
Equipment Rental
Company
To PJE
Equipment Hours
F.E. Time from:
to:
By LAN

1550 Calibrate Hydrogen Analyzer
Baseline = 30 mV
Cal factor = 11.409

1605 Baseline = 37 mV
Cal factor = 8.722

1620
Repeat. Baseline = 58 mV.
Never calibrated - cartridge leaked

1630 repeat.
Calib. factor = 8.27

16 repeat.

Baseline = 50 mV
Calibration factor 9.364

Visitors:
Attachments
☒ Continued
Distribution
Initial

CDM Camp Dresser & McKee Inc.

FIELD INVESTIGATION DAILY REPORT

Sheet 4 of

Project ESTCP Project No.
Location Bangor Date 1/23/00
Equipment Rental Company To
Equipment Hours F.E. Time from: to: By

0715 Lisa Nielsen & Pat Evans onsite @ Bangor SUBASE @ 0715. Begin setup w/ new pumps @ 8MW6. DTW from casing is 25.25' Set up rental pumps to test, drawing water fine.
Pump is "Portable Masterflex L/S sampling pump" with internal battery
Pump head model # 77201-62

0846 Calibrate DH Analyzer
Allow sensor to warm up for 5 min
Baseline 32
N psi = 1100
Cal factor 1.826 - had to abort calibration because mV were increasing too slowly after it reached 500 mV

0915 Repack cartridge, calibrate Analyzer
Baseline 20
Cal factor 3.137 aborted calibration; mV stopped increasing @ ~600 mV
N psi = 1100
Cartridges still leaking; put Teflon tape on each fitting

0945 Calibrate Analyzer
Baseline 15
NPSi = 1000

1000 Turn pumps on
Stabilize rate on each pump to 0.4 Lpm
Total withdrawal = .8 Lpm

1030 Quit

Visitors:
Attachments ☒ Continued
Distribution Initial

rev 9/00 forms\field\field investigation daily report p65

CDM Camp Dresser & McKee Inc.

FIELD INVESTIGATION DAILY REPORT

Sheet 5 of

Project ESTCP | Project No. 4000-31212
Location SUBASE Bangor | Date 01/23/01
Equipment Rental | Company | To PJE
Equipment Hours | F.E. Time from: | to: | By UAN

1040 Calibrate Analyzer
N psi 800
Baseline 11
Cal Factor 4.685 mV/s
1120 Turn pumps on - pH analyzer + Bubble strip
Baseline 10.9
N psi 700
1123 Turn on analyzer
1130 Take sample from analyzer
1134 Inject sample into Trace Analyzer
H = 20.8 mV
1140 Inject sample of cal gas
H = 75.7 mV
1150 Take sample from analyzer
1155 Inject sample into Trace analyzer
H = 10.5 mV
1206 Sample bubble strip (ET = 46 min)
1209 Inject sample into trace analyzer
H = 13 mV CO = 21.3 mV
1215 Take sample from H analyzer - 55 min equilibre
1217 Take sample from Bubblestrip (ET = 57 min)
1224 Inject H analyzer sample into trace analyzer $\frac{15.9}{75.7}(11.6)(0.8) = 1.95$ nM
H = 16.2 mV - .3 (not zeroed) = 15.9 mV C = .66 V
1228 Inject Bubble strip sample into trace analyzer
~~1227 Inje~~ H = 11.8 mV CO = .03 V (ET = 57 min).
Carulite is working
Equilibrated quickly $BS = \frac{11.8}{75.7}(11.6)(0.8) = 1.4466$ nM
3.97 nM - Hyd analyzer

Visitors: 1218 - switch pH analyzer to step 4
Attachments (GLE with level high) ☒ Continued
Distribution Initial

rev 5/00 forms\field\field-investigation\daily-report p65

CDM Camp Dresser & McKee Inc.

FIELD INVESTIGATION DAILY REPORT

Sheet 6 of _____

Project ESTCP | Project No. 4000-31212
Location Subase Bangor | Date 01/23/01
Equipment Rental _____ Company _____ To _____
Equipment Hours _____ F.E. Time from: _____ to: _____ By LAN / PJE

1254 Calibrate hydrogen analyzer
Baseline ~~7.4~~ 18.1

mV for sample ← value on bottle

Expected [H] $\frac{11.8}{75.7} \times 11.6 \times .8 = 1.45$ nM

75.7 ← for standard ← conversion ppm→nM

Actual [H] was 174% higher than expected

% deviation = ~~(Actual - Standard / Standard expected) × 100% / ex~~

Cal factor 7.396 mV/s

1310 Start pumps + DH analyzer.
DH Baseline = 30 mV.
N_2 pressure = 600 psig

1327 gas sample on DH analyzer (ET = 17 min)
H_2 = 20.4 mV

1337 Measured sulfide 0.00 ppm
run1 ferrous Fe 0.10 ppm
run2 ferrous Fe 0.0 ppm

1343 gas sample for DH analyzer (ET = 33 min)
H_2 = 16.4 mV $\left(\frac{16.4}{75.7}\right)(11.6)(0.8) = 2.01$ nM

1356 gas sample from DHA.
H_2 = 18.0 CO = 6.5 V (ET = 46 min)

1357 Switch to Step 4 $\left(\frac{18}{75.7}\right)(11.6)(0.8) = 2.21$ nM

1402 Sample DHA during beginning of Step 5
H_2 = 10.3 CO = 500 mV

1410 Inject air H_2 = 9.8

Visitors:

Attachments ☐ Continued

Distribution Initial

CDM Camp Dresser & McKee Inc.

FIELD INVESTIGATION DAILY REPORT

Sheet 7 of ____

Project ESTCP — Project No. 4000 - 31212
Location Bangor Subase — Date 01/23/01
Equipment Rental ____ Company ____ To ____
Equipment Hours ____ F.E. Time from: ____ to: ____ By IAN / PJE

1422 - H Analyzer result = 3.0406
1440 - Change canulae. Start pumps to do another run
Baseline 48
1448 - Inject bubble strip w/ 20 mls air
1452 - Sample GLE H_2 = 16.8 mV $\left(\frac{16.8}{75.7}\right)(11.6)(.8) = 2.06$ nM

1512 - Switch to step 4 + sample GLE + sample Bubble strip.
1515 - Inject GLE into Trace Gas Analyzer — Trace Analyzer ET = 0 min
H_2 = 18 mV CO = 6.5 V
1518 - Inject bubble strip sample — Trace Analyzer ET = 3 min
H_2 = 12.4 mV CO = .02 V
1517 - Sample DHA @ Step 5 — Trace Analyzer ET = 7 min
H_2 = 11.4 mV CO = 13.4 mV

DH Result = 1.8688 nM.
Comparison to expected result from GLE
$\frac{18}{75.7} \times 11.6 \times .8 = 2.20666$ nM

~~2.20666 - 1.68~~

$\frac{1.8688 - 2.20666}{2.20666} = -15.3\%$

1545 - Collect bubble strip sample
1550 - Inject bubble strip sample
H_2 = 13 mV CO = .03 $DH = \left(\frac{13}{75.7}\right)(11.6)(.8) = 1.59$ nM

DH Comparison to Bubble strip.
$\frac{1.8688 - 1.59}{1.59} \times 100\% = 17.5\%$ high

Visitors:
Attachments ☐ Continued
Distribution Initial

CDM Camp Dresser & McKee Inc.

FIELD INVESTIGATION DAILY REPORT

Sheet 8 of _____

Project ESTCP | Project No. 4000-31212
Location Subase Bangor | Date 01/23/01
Equipment Rental _____ Company _____ To _____
Equipment Hours _____ F.E. Time from: _____ to: _____ By LAN/PJE

Examine machine + discover intervolume is full of mole sieve + MGC. Clean intervolume
1624 Start pumps + turn on DHA

1638 GLE sample
H_2 = 28.2 mV CO = 108.7 mV.

1649 GLE sample.
H_2 ≈ 20 mV (on CO peak)
1703 Take sample
* F4 → delete to switch to step 4
H_2 = 17.8 CO = 98.6 mV
1708 Take sample @ beginning of step 5
H_2 = 17.9 CO = 80.9

~~Com~~ Accidentally disconnected power to DHA at beginning of step 5 — did not get final DH result

01/24/01
0720 LAN + PJE onsite at Subase to demonstrate DHA.
Set up equipment @ 8MW48
- calibrate Hydrolab
- DTW below casing = 24.84'
Hydrolab calibrations
DO = 96.7
pH = 7.11 for 7
pH 3.93 for 4
Cond 1410 for 1412
ORP = 178 for 192

Did not recalibrate

Visitors:
Attachments ☐ Continued
Distribution Initial

rev 5/00 forms/field/field investigation daily report p65

F4 → delete
Take sample @ beg of Step 5

CDM Camp Dresser & McKee Inc.

FIELD INVESTIGATION DAILY REPORT

Sheet 9 of

Project ESTCP | Project No. 4000-31212
Location Bangor Subase | Date 01/24/01
Equipment Rental | Company | To
Equipment Hours | F.E. Time from: | to: | By LAN / PJE

0936 Pump on to begin purge
0949 Begin calibration of DHA
Baseline = 15
Cal factor 4.764

0924 N psi = 1100
Baseline = 24 → start DHA + B5
0938 Sample bubble strip = DHA
0946 Inject
Inject 11.6 ppm H_2 in N
H_2 = 90 mV
Record H_2 and CO measurements on table, sheet 10 of field notes
1035 ET 1:07 DHA equilibrated; bubble strip not
Switch to Step 4
1114 Measure sulfide .25 ppm
.10 ppm
.10 ppm
1125 Measure Fe 5.8 ppm
2.8 ppm

DHA drop tubing was 1.5' higher than bottom of Bubble strip drop tubing

* inverted tip pans
* car battery w/ connects
* catalyst holders
* festo unions
* look into getting smaller anaero packs
* ring stand w/ clamp for hydrolab
* disposable camera
* funnel
* stainless steel 3 way ~~SS-42XS4~~ ball valve
* drum wrench
* bunjee cord

Visitors:
Attachments ☐ Continued
Distribution Initial

rev 9/00 forms\field\field investigation daily report.doc

CDM Camp Dresser & McKee Inc.

FIELD INVESTIGATION DAILY REPORT

Sheet 10 of _____

Project ESTCP | Project No. _____
Location Subase Bangor | Date 01/24/01
Equipment Rental _____ Company _____ To _____
Equipment Hours _____ F.E. Time from: _____ to: _____ By LAN/PJE

DHA Flow = 4.5 Lpm BS (Flow = 4.5 Lpm)

Real Time	ET	Step	Inj Time	H_2	CO	Inj time	H_2	CO
0942	[redacted]	3	0946	86		0948	43.1	
1003	36	3	1010	97.4	35.4	1012	58.5	27.6
1019	50	3	1026	96		1030	62.6	
1040	1:13	5	–	–	–	1050	75.2	
1133	2:05					1136	73.7	

10:42 ET 1:14
DHA - 10.9664 mM
tried to take sample and lost sample when tip popped off
Sampled bubblestrip @ ET 1:13
Bubblestrip equilibrated
1200 Move all equipment to MW5
open well
1205 DTW 24.84' below top of PVC
25.25' below top of casing
1211 Start pump for bubblestrip = 3 Lpm - injected no air (GW is degassed)
1225 Start pump for DHA - Flow = .45 Lpm
1226 Start DHA Baseline = 22.7 mV
N2 = 850 psig

	Real Time	ET	DHA Step	Inj time	H_2	CO	Bubble Strip Inj time	H_2	CO
HA	1240	12	3	[redacted] 1247	89.8	59			
BS	1245	34		[redacted]			1250	39.8	~~54~~ 47
HA	1258 ~~1247~~		3	1305	164.6				
BS	1259						1308	39.6	42.3
DHA	1322		3	1328	missed >200	46.4	+		
BS	1324			1333	[redacted]			105.5	46.4
DHA	1405		3	1410	160.6	34.5			
BS	1403			[redacted]			1413	130.4	37.4
DHA	1419		5		44.9	131.6			
BS	1435			~~1437~~ 1440			~~1440~~	96.2	39.6

Visitors
Attachments
Distribution
☐ Continued

rev 3/00 form/field/fieldinvestigationdailyreport p65

CDM Camp Dresser & McKee Inc.

FIELD INVESTIGATION DAILY REPORT

Sheet 11 of

Project _____ Project No. _____
Location _____ Date 01/24/01
Equipment Rental _____ Company _____ To _____
Equipment Hours _____ F.E. Time from: _____ to: _____ By _____

Calculations for 8MW48:

DHA

Expected H_2 (GLE) $\frac{96mV}{90mV} \times 11.6 \times .8 = 9.9$ nM

Actual H_2 ~~10.97~~ nM
10.9664

Bubble Strip H_2 $\frac{73.7}{90mV} \times 11.6 \times .8 =$ ~~4.0832~~ 7.599 nM

% difference
DHA/GLE ~~$\frac{10.9664 - 9.9}{9.9}$~~ ~~$\frac{9.9 - 10.9664}{10.9664}$~~

$\frac{10.9664 - 9.9}{9.9} \times 100\% = +10.77\%$

BS/DHA % diff.
observed - expected
$\frac{10.9664 - 7.599}{7.599} \times 100\% = 44.31\%$

14:14 Advance DHA to Step 4
14:20 DHA = 17.8525 nM
14:35 Sample bstrip

BS = $\left(\frac{96.2}{90}\right)(11.6)(0.8) = 9.92$
GLE = $\left(\frac{160.6}{90}\right)(11.6)(0.8) = 16.6$

1508 Test MWS water for sulfide: 0.00 ppm
0.00 ppm
ferrous fe 8.9 x 2 = 17.98
9.9 x 2 = 19.98
9.0 x 2 = 18.00

Visitors:
Attachments ☐ Continued
Distribution Initial

CDM Camp Dresser & McKee Inc.

FIELD INVESTIGATION DAILY REPORT

Sheet 12 of _____

Project ESTCP | Project No. 4000-31212
Location Subase Bangor | Date 01/24/01
Equipment Rental _____ Company _____ To _____
Equipment Hours _____ F.E. Time from: _____ to: _____ By LAN/PJE

1527 Take sample from bubble strip
61 mV

1551 Take sample from Bubble strip.
1558 injection H_2 = 42.4 mV
BS DH = $\left(\frac{42.4}{90}\right)(11.6)(0.8)$ = 4.37 nM

1559 Start New DHA run.

N2 = 700 psig
Baseline = 44 mV.

	time	Elapsed min	Inj Time	H_2 (mV)	CO (mV)	step
HA	1551	12	1555	20.3		3
BS	1551		1558	42.4 mV	49.8	3
HA	1611	30	1615	38.2 mV		3

Pat wants water quality data on same sheet as bubble strip / DHA data.

Gas bubble grew larger at well 8 MW 48 and MW 5 but smaller at 8 MW 06

1624 56 1629 28.7 3
1633 Advance to step 5

Visitors: GLE DH = $\left(\frac{38.2}{90}\right)(11.6)(0.8)$ = 3.94 nM

Attachments ☐ Continued

Distribution ~~Ao DHA/BS~~ Initial

rev 9/00 forms\field\field investigation daily report p65

CDM Camp Dresser & McKee Inc.

FIELD INVESTIGATION DAILY REPORT

Sheet 13 of

Project ESTCP | Project No. 4000-31212
Location Subase Bangor | Date 01/24/01
Equipment Rental | Company | To
Equipment Hours | F.E. Time from: | to: | By RJE / LAN

1635 ~~Fin~~ Measure water level in well prior to turning well off.
Well drew down to 27.27' below casing.
Total drawdown over ~4+ hours = 2'
1636 Pump off
Notes: Hydrolab never equilibrated. May ~~have~~ be due to ~~the amount of drawdown~~ + changing water chemistry, ~~from~~ indicating water was being drawn from other sources.

pH result = 9.2407 nM

Pull drop tubing. Tubing attached to bubble strip was ~10" lower than DHA's drop tubing.

$$\Delta\% \text{ pHA/BS} = \frac{9.2407 - 4.37}{4.37} = 111\%$$

$$\Delta\% \text{ pHA/GLE} = \frac{9.2407 - 3.94}{3.94} = 135\%$$

Visitors:
Attachments ☐ Continued
Distribution Initial

rev 9/00 forms\field\fieldinvestigationdailyreport.p65

CDM Camp Dresser & McKee Inc.

FIELD INVESTIGATION DAILY REPORT

Sheet 14 of

Project ESTCP — Project No. 4000-31212
Location Subase Bangor — Date 01/25/01
Equipment Rental — Company — To
Equipment Hours — F.E. Time from: — to: — By LAN/PJE

0720 Lisa and Pat onsite to demonstrate DHA at OB MW 24
0735 PJE calibrate Hydrolab
0753 PJE calibrate DHA with 11.6 ppm H2
baseline = 44.0 mV
Shut power off for DHA by accident
Restart calibration
Baseline = 39 mV
CF = 5.97 mV/sec.
0818 DHA on baseline = 24
0825 Sample BS
0826 Sample DHA
0837 DTW = 25.57
0844 Sample BS
0845 Sample DHA
0939 Sulfide 0.00 ppm
0.00 ppm
Ferrous Fe 1.5 ppm
1.3 ppm

expected DH Based on Bubble strip

$$= \left(\frac{109.6}{93.6}\right)(11.6)(0.8) = 10.8663\,nM$$

Expected DH Based on GLE

$$= \left(\frac{87.7}{93.6}\right)(11.6)(0.8) = 8.6950\,nM$$

DHA/BS deviation $= \left(\frac{10.1543 - 10.8663}{10.8663}\right)(100\%) = -6.55\%$

DHA/GLE deviation $= \left(\frac{10.1543 - 8.6950}{8.6950}\right)(100\%) = 16.8\%$

Visitors:
Attachments — ☐ Continued
Distribution — Initial

rev 9/00 — forms\field\field investigation daily report p65

CDM Camp Dresser & McKee Inc.

FIELD INVESTIGATION DAILY REPORT

Sheet 15 of

Project ~~Subas~~ ESTCP Project No. 4000-31212
Location Subase Bangor Date 01/25/01
Equipment Rental Company To
Equipment Hours F.E. Time from: to: By LAN / PJE

1020 Move to well 8MW47.
1033 Turn both pumps on. Pump attached to BS was slow, so moved tubing in pump head
1036 DHA pump off
Turn pump on, start DHA @ 1051
1203 Advance DHA to Step 5
1216 Sample for sulfides 0.00 ppm
0.00 ppm
1223 Sample for ferrous ~~7~~ 1.7 ppm
1.7 ppm
1228 Turn BS pump off

expected DH based on Bubble Strip

$$\left(\frac{23.2}{93.6}\right)(11.6)(0.8) = 2.3002\ nM$$

expected DH based on GLE

$$\left(\frac{20.7}{93.6}\right)(11.6)(0.8) = 2.2062\ nM$$

$$\text{DHA/BS deviation} = \left(\frac{3.1766 - 2.3002}{2.3002}\right)(100\%) = 38\%$$

$$\text{GLE/DHA deviation} = \left(\frac{3.1766 - 2.2062}{2.2062}\right)(100\%) = 44\%$$

Visitors:
Attachments ☒ Continued
Distribution Initial

rev 9/00 forms\field\field investigation daily report p65

CDM Camp Dresser & McKee Inc.

FIELD INVESTIGATION DAILY REPORT

Sheet 16 of

Project ~~Sat~~ ESTCP
Project No. 4000-31212
Location Subase Bangor
Date 01/25/01
Equipment Rental _____ Company _____ To 1
Equipment Hours _____ F.E. Time from: _____ to: _____ By LAN/PJE

1240 Move to 8MW30, Set up equipment
1305 Both pumps on
1310 Start bubble strip
Change carulite

1423 Analyze for Sulfide : 0.15 ppm
0.15 ppm
Ferrous Fe : 1.05 ppm
1.20 ppm

Expected DH based on BS

$$\left(\frac{203.9}{93.6}\right)(11.6)(0.8) = 20.2\,nM$$

Expected DH based on GLE

$$\left(\frac{148.5}{93.6}\right)(11.6)(0.8) = 14.72\,nM$$

DHA/BS deviation

$$\left(\frac{25.9709 - 20.2}{20.2}\right)(100\%) = 28.6\%$$

DHA/GLE deviation

$$\left(\frac{25.9709 - 14.72}{14.72}\right)(100\%) = 76.9\%$$

Visitors:

Attachments 1451 - New Carulite + New Calibration (11.6 ppm) ☒ Continued

Distribution

CF = 6.363

rev 3/00C

form \field\field investigation daily report p65

CDM Camp Dresser & McKee Inc.

FIELD INVESTIGATION DAILY REPORT

Sheet 17 of _____

Project ESTCP | Project No. 4000-31212
Location Bangor Subase | Date 01/25/01
Equipment Rental _____ Company _____ To _____
Equipment Hours _____ F.E. Time from: _____ to: _____ By UAN/PJE

1515 Fill up N and calibration gas
1520 Open well 8MW53
Move carulite to outside of DHA

1638 Tripped over GLE + Broke.

1655 Restart with GLE that ~~[illegible]~~ has tube in nozzle.

Expected DH Based on BS

$$\left(\frac{128.8}{93.6}\right)(11.6)(0.8) = 12.7699\ mM$$

Expected DH Based on GLE

$$\left(\frac{120.0}{93.6}\right)(11.6)(0.8) = 11.8974\ mM$$

DHA/BS deviation

$$\left(\frac{18.9819 - 12.7699}{12.7699}\right)(100\%) = 48.7\%$$

DHA/GLE deviation

$$\left(\frac{18.9819 - 11.8974}{11.8974}\right)(100\%) = 59.6\%$$

Visitors: NOTE - GLE with side tube does much better job of water gas separation.

Attachments ☐ Continued

Distribution Initial

rev 9/00 forms\field\field investigation daily report.p65

CDM Camp Dresser & McKee Inc.

FIELD INVESTIGATION DAILY REPORT

Sheet _____ of _____

Project ESTCP | Project No. 4000-31212
Location Subase Bangor | Date 01/24/01
Equipment Rental _____ Company _____ To _____
Equipment Hours _____ F.E. Time from: _____ to: _____ By FJE/LAN

0735 Arrive onsite. Begin equipment setup at SMU42
Calibrate DHA. When replaced cartridge, MGC and MS wet
Ord baseline = 277 Calibration failed (voltage too low)
Blew a fuse in cigarette lighter extension cord.
0848 Restart calibration; baseline = 264 Cartridge not sealed ~~MGC failed.~~ → pvc sticking up.
0911 Restart calibration; baseline = 302
CF = 13.4 MGC wet when replaced after run
0933 Restart calibration baseline = 42 Water in intervolume.
CF = 9.911 MGC, MS not wet
0957 Restart calibration baseline = 31
CF = 10.890
1020 Start DHA + BS. - Abort both; switched to Step 4 before I pressed hold for Step 3
1042 Turn pumps on
1045 Restart DHA & BS. Will take samples every 10 minutes
DHA flow low due to collapsed Tygon tubing

Visitors:

Attachments ☐ Continued

Distribution Initial

CDM Camp Dresser & McKee Inc.

FIELD INVESTIGATION DAILY REPORT

Sheet _____ of _____

Project ESTCP Project No. _____
Location Subase Bangor Date 01/26/01
Equipment Rental _____ Company _____ To _____
Equipment Hours _____ F.E. Time from: _____ to: _____ By LAN / RJE

MW03
1150 Set up equipment
1212 Pumps on
At Ft. Lewis, start Bubble Strip at beginning of Step 3 on DHA
1225 Start both DHA and BS
Tubing collapsed on DHA pump; shut down to fix tubing
1325 Successfully restart both pumps
1338 Restart BS and DHA

Visitors:
Attachments ☐ Continued
Distribution Initial

rev 9/00 form\field\field investigation daily report p65

CDM Camp Dresser & McKee Inc.

FIELD INVESTIGATION DAILY REPORT

Sheet 1 of

Project ESTCP - Soil Sampling @ Site 1 Project No. 4000-31212
Location Subase Bangor Date 01/29/01
Equipment Rental Company Cascade drill To
Equipment Hours F.E. Time from: to: By LAN

0800 Lisa Nickens + Pat Evans onsite to conduct soil sampling at 10 monitoring well locations.
~~0900~~ Drillers onsite to get badged - Yancy + Frank
Move over to 8MW06. Mick Butterfield chose location
Drillers set up equipment, begin drilling @ 8MW06
Record log and sample intervals 35-36½ and 42-43½
Drillers backfill boring w/ bentonite chips
1045 Move equipment to 8MW48. Wait for Mick Butterfield to point out location (Mick not onsite)
Drillers take lunch ~11:15
11:45 Drillers start cleaning augers. Still waiting for Mick. Utilities are not clearly marked and location is not marked.
1204 Mick Butterfield onsite to mark locations w/ spray paint
1210 Begin drilling near 8MW48. Log and sample
1300 Finished, move to next location MW05.
1310 Drillers cleaning equipment
1338 Drillers set up @ next site (MW05)
1407 Begin drilling @ MW05
Rig hydraulics going out; MW05 will be last well. Rig will go back to shop. Meet onsite @ 0730 tomorrow. Pat labelled all drums w/ spray paint.
1545 Backfill hole.
Tomorrow start w/ ~~MW30~~ 08MW24
powdered activated carbon

Onsite: Rick (USGS) Stiffer wire
Rob (Navy) blue ice
Eric (EPA) Safety glasses

Visitors: Mick Butterfield (NAVY)

Attachments ☐ Continued

Distribution Initial

rev 9/90 forms/field/fieldinvestigationdailyreport.p65

CDM Camp Dresser & McKee Inc.

FIELD INVESTIGATION DAILY REPORT

Sheet 1 of 1

Project ESTCP SUBASE Bangor - Daily Summary Project No. 4000-31212
Location Date 01/30/01
Equipment Rental Company Cascade To
Equipment Hours F.E. Time from: to: By LAN

0730 LAN and PJE onsite to conduct soil sampling
Cascade Drilling already onsite w/ 3 men. Onsite:
Rick (USGS), EHC, Rob (USNavy), Mick B (Navy),
Drill and sample 3 holes in AM:
08MW24
08MW47
08MW30
Recover drop tubing from 08MW24.
Break for lunch - 25 minutes
Drill 08MW53; lose sampler @ 34' and fish
for 1 hour, 55 minutes. Drillers are unable to
retrieve sampler and abandon it in the hole. Hole
is backfilled w/ bentonite chips and sealed w/
asphalt. Drill a second hole @ a location chosen
by Mick Butterfield, approximately 4' from original
hole.
1715 offsite

Visitors:
Attachments ☐ Continued
Distribution Initial

CDM Camp Dresser & McKee Inc.

FIELD INVESTIGATION DAILY REPORT

Sheet 1 of 2

Project: ESTCP Site 1 — Project No. 4100-31212
Location: SUBASE Bangor — Date: 1/30 + 1/31/01
Equipment Rental: ____ Company: ____ To: ____
Equipment Hours: ____ F.E. Time from: ____ to: ____ By: PJE/LAN

Ran several calibrations on PHA. Determined that S3 & S8 were leaking due to debris in valve housing. This debris resulted from previous runs with the GLE with the nozzle-mounted gas discharge: Type A below.

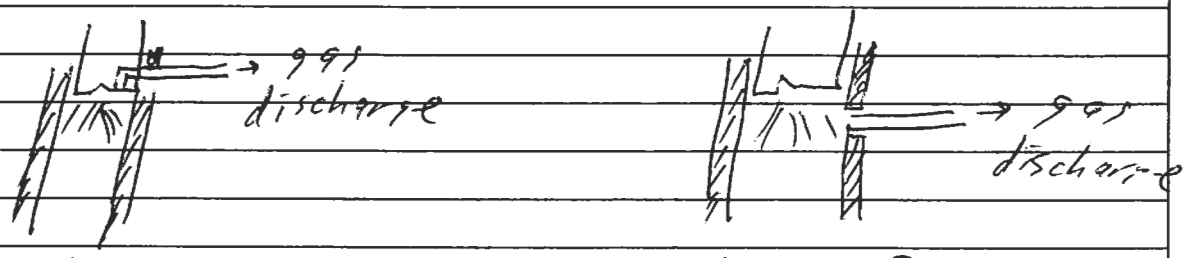

GLE-A — GLE-B

GLE A does a much worse job of gas-liquid separation than GLE B. The last run on 1/25/01 (SMW53) was with GLE-A. This may be why runs on 1/26/01 gave high numbers. Water had entered the sensor housing & caused sensor drift. This drift was noted on 1/30/01 when running N_2 gas during step 3 measure. Also - inspection of the sensor showed water inside the housing. The sensor was replaced & calibrations were run. On 1/31/01 the first run of the day did not calibrate. Successive calibrations gave calibration factors from 4 to 14. ~~Last 3 calibrations gave 14.1278, 13.3769 + 14.6. Sensor may need warm up? Also ran~~

Visitors:

Attachments — ☒ Continued

Distribution — Initial

CDM Camp Dresser & McKee Inc.

FIELD INVESTIGATION DAILY REPORT

Project ESTCP Site 1 Project No. 4000-31212
Location SUBASE Bangor Date 1/30 + 1/31/01
Equipment Rental _____ Company _____ To _____
Equipment Hours _____ F.E. Time from: _____ to: _____ By PJE/LAN.

~~Ran~~ After calibration ran N_2 through GLE. Gave 0.15 nM + 0.02 nM in succesive runs.
Then ran Eal gas in GLE. Gave 14.1278, 13.3769 + 14.6 nM. Expected 11.6 (0.8) = 9.3 nM.
Not sure why results were high.

Visitors:
Attachments ☐ Continued
Distribution Initial

CDM Camp Dresser & McKee Inc.

FIELD INVESTIGATION DAILY REPORT

Sheet 1 of

Project ESTCP Subase Bangor
Project No. 4000-31212
Location
Date 01/31/01
Equipment Rental
Company Cascade
To
Equipment Hours
F.E. Time from:
to:
By

0700 Cascade Drilling onsite to auger drill 3 holes for CDM Soil Sampling w/ 3 men.
Holes bored:
1) 28MW06
2) MW3 - refusal : ran into rock (?) @ 20 feet. Had to move to another location chosen by Mick Butterfield
3) MW3 - redrill (hit rock first time)
4) 08MW42
1305 Drillers offsite

Visitors:
Attachments ☐ Continued
Distribution Initial

CDM Camp Dresser & McKee Inc.

FIELD INVESTIGATION DAILY REPORT

Sheet 1 of

Project ESTCP - Site 1 Project No. 4000-31212
Location Bangor Subase Date 02/01/01
Equipment Rental Company To
Equipment Hours F.E. Time from: to: By LAN/PJE

0712 Begin warming up DHA
0720 Baseline = 25mV
0726 " = 20mV
0737 " = 17mV
0742 = 16 mV
0804 " = 14mV
0805 Start calibration with 11.6ppm H_2/N_2.
N_2 flow = 1 lpm
H_2/N_2 flow = 1 lpm.

Did not calibrate.

0824 new calibration.
Baseline = 28mV.
CF = 13.145.
0850 New calibration. Baseline = 27mV CF = /
Abort, canule connected wrong
0905 New calibration Baseline = 32mV CF = 8.538
0922 New calibration Baseline = 39mV CF = 15.984
0943 Measure cal gas Baseline = 32mV
abort; not hooked up correctly to gas
0955 Measure cal gas Baseline 60mV
14.1204 nM
1012 Measure cal gas Baseline 32mV
10.8522 nM
1032 Measure cal gas Baseline 24mV
14.1724 nM
1052 Measure cal gas Baseline 25mV
13.4764 nM

Visitors:
Attachments ☐ Continued
Distribution Initial

CDM Camp Dresser & McKee Inc.

FIELD INVESTIGATION DAILY REPORT

Sheet _____ of _____

Project _____ Project No. _____

Location _____ Date _____

Equipment Rental _____ Company _____ To _____

Equipment Hours _____ F.E. Time from: _____ to: _____ By _____

GW

	Well	DHA	Expected BS	Δ %	Expect GW	Δ %
side	8MW24	10.2	10.9	-6.55	8.7	+16.8
side	8MW47	3.2	2.3	+38	2.2	+44
/ side	8MW30	2.6	20.2	+ ~~14.3~~ 28.6	14.7	+76.4
/ nozzle	8MW53	19	12.8	+ 48.7	11.9	+59.6

Visitors:

Attachments ☐ Continued

Distribution Initial

CDM Camp Dresser & McKee Inc.

FIELD INVESTIGATION DAILY REPORT

Sheet 2 of

Project ESTCP Site 1 Project No. 4000-31212
Location Subase Bangor Date 02/01/01
Equipment Rental Company To
Equipment Hours F.E. Time from: to: By LAN/PJE

1117 Run calibration Baseline = 22 CF = 12.122
1135 Run calibration Baseline = 35 CF = 15.030

1255 Run N gas Baseline = 16
.0114 nM
1330 Move equipment to EMW30 to run DHA only / GLE (no bubble strip)
Spend rest of afternoon making DHA runs (3 total) and one Bubble strip run
One additional run was conducted w/ carbon

Visitors:
Attachments ☐ Continued
Distribution Initial

	ORP	Screen		DTW	H2
✓ P-1W06	-153	37.80 - 47.80	(35-40, 40-45)	25.25	1.45
MW05	-156	20-40	(25-30, 35-40)	25.25	~4
✓ 8MW48	-268	23-38	(25-30, 35-40)	24.84	7.6
✓ 8MW24	-140	35-45	(35-40, 40-45)	25.46	10.9
✓ 8MW47	-120	22.50-37.50	(25-30, 35-40)	25.43	2.3
✗ 8MW30	-244	38.60-48.60	(35-40, 40-45)	25.45	20.2
✓ 38MW01	-124	? (well depth 39.82)	(30-35, 35-40)	28.84	5.5
✓ 8MW53	-215	21-46	(25-30, 35-40)	24.95	12.8
MW03	-111	18-35	(25-30, 30-35)	24.54	1.1
✗ 8MW42	-25	23-38	(25-30, 35-40)	24.76	0.45

CDM Camp Dresser & McKee Inc.

FIELD INVESTIGATION DAILY REPORT

Sheet 1 of

Project ESTCP Site 1 Project No. 4000-31212
Location Subase Bangor Date 2/2/01
Equipment Rental Company To
Equipment Hours F.E. Time from: to: By LAN/RJE

710 Onsite @ Bangor to continue testing DHA
732 Run Cal gas Baseline = 24 17.3380 nM
0805 Move equipment to 8MW30, run DHA only (no Bubble Strip)

expected 11.6 (0.8) = 9.28 nM.

must correct DHA results by multiplying by $\frac{9.28}{17.3380} = 0.5352$

1230 Turn pump on @ 8MW42 flow = 700 ml/min
1235 DHA Step 3 start
Too much water on pump in DHA, restart @
1240 lower pumping rate - 450 ml/min, restart DHA

Sample	ET
DHA A	5

abort, did not press "menu" and DHA advanced to Step 4

1254 DHA Step 3 started

Sample	ET	H_2
DHA A	6	18.4
DHA B	10	17.7
DHA C	15	17.3
DHA D	20	16.4 → .87 nM expected based on Trace Analyzer

DHA 0.8377 nM $\xrightarrow[\text{conversion .5352}]{}$ .45 nM

Visitors:
Attachments ☐ Continued
Distribution Initial

rev 9/00 forms/field/field investigation daily report p65

CDM Camp Dresser & McKee Inc.

FIELD INVESTIGATION DAILY REPORT

Sheet 2 of

Project ESTCP
Project No. 4000-31212
Location Subase Bangor
Date 02-02-01
Equipment Rental
Company
To
Equipment Hours
F.E. Time from:
to:
By LAN/PJE

1340 Start DHA step 3 @ MW03 Flow = 450 mL/min
MW03 water shows effervecence and brown tint

Sample		ET	H_2
DHA	A	5	28.6
DHA	B	10	28.1
DHA	C	15	24.2
DHA	D	20	24.2

DHA 50.0998 nM

Visitors:

Attachments ☐ Continued

Distribution Initial

CDM Camp Dresser & McKee Inc.

FIELD INVESTIGATION DAILY REPORT

Sheet _____ of _____

Project _____ Project No. _____

Location _____ Date _____

Equipment Rental _____ Company _____ To _____

Equipment Hours _____ F.E. Time from: _____ to: _____ By _____

Eric Weber
US EPA
960 College Station Rd
Athens, GA 30605
706 355 8224

All Large

Carla Koretsky
Dept of Geosciences
1121 Rood Hall
W. Mich. University
Kalamazoo, MI 49009
616 387 5337

& Small

Visitors:

Attachments ☐ Continued

Distribution Initial

CDM Camp Dresser & McKee Inc.

GROUNDWATER SAMPLING RECORD

Sample ID _____ Well No. MW5

Project ESRP Date 01/24/01
Project No. 4000-31212 Sampled By LAN/PJE
Weather Cloudy, rain upper 30s Reviewed By _____

PURGING

Depth to Water (TOC) 25.25	Time 1205	Comments
Water Volume in Casing	Total Well Depth (TOC)	
Volume Purged Before Sampling	Screened Interval (TOC)	
Purging Method	Purge Volume Measurement Method	

Time	Flow Rate	Cumulative Volume	Temp (°C)	Specific Conductance (microsiemens/cm)	pH	ORP ~~Turbidity~~	Dissolved Oxygen	Comments
1220		0	11.01	192.7	5.92	-115	2.39	
1230			13.84	184.6	6.04	-160	0.26	
1235	.3	.75gal	13.14	184.6	5.93	-160	2.1	
~~1324~~					6.07			
1402			14.76	412.6	~~7.18~~	-184	.4	
1549			13.95	505.1	6.49	-156	0.14	

SAMPLING

Sampling Method

Analytical Matrix ☐ Yes ☐ No ☐ Attached Time Sampled

Sample Container	Preserved By	At What pH	Filter Type	Cooled By

SAMPLE DATA

Appearance/Odor	
pH (last stabilized)	Temperature (°C)
Eh (millivolts)	Specific Conductance (microsiemens/cm)
OVM-PID Headspace (ppm)	Comments

DISPOSITION

Chain-of-Custody ☐ Yes ☐ No		Chain of Custody ID
Duplicate Sample ID		Replicate Sample Nos.
ANALYTICAL LAB	Lab Name	Date Sent to Lab
	Shipment Method	
SPLIT WITH	Name (s)	
	Organization (s)	
Other		

CDM Camp Dresser & McKee Inc.

GROUNDWATER SAMPLING RECORD

Sample ID _____ Well No. 8mw48

Project ESTCP Date 01/24/2001
Project No. _____ Sampled By LAN/PJE
Weather rainy, overcast upper 30s/low 40s Reviewed By _____

PURGING

Depth to Water (TOC) 24.84	Time 0756	Comments	
Water Volume in Casing	Total Well Depth (TOC)		
Volume Purged Before Sampling	Screened Interval (TOC)		
Purging Method	Purge Volume Measurement Method		

Time	Flow Rate	Cumulative Volume	Temp (°C)	Specific Conductance (microsiemens/cm)	pH	ORP ~~Turbidity~~	Dissolved Oxygen	Comments
0841	.45lpm	.25 gal	15.12	838.7	6.65	-190	6.3	odor
0846	.45lpm	.75 gal	15.31	831.5	6.64	-209	0.26	odor
0859	.45lpm	1.75 gal	15.09	822.2	6.69	-231	1.1	"
0910	.45lpm	2.75 gal	15.20	810.3	6.68	-245	0.8	"
0926	.45lpm	3.5	15.17	805.5	6.68	-258	0.3	"
~~0938~~			14.81	757.8	6.68	-268	0.7	"

SAMPLING

Sampling Method

Analytical Matrix ☐ Yes ☐ No ☐ Attached Time Sampled

Sample Container	Preserved By	At What pH	Filter Type	Cooled By

SAMPLE DATA

Appearance/Odor	
pH (last stabilized)	Temperature (°C)
Eh (millivolts)	Specific Conductance (microsiemens/cm)
OVM-PID Headspace (ppm)	Comments

DISPOSITION

Chain-of-Custody ☐ Yes ☐ No		Chain of Custody ID
Duplicate Sample ID		Replicate Sample Nos.
ANALYTICAL LAB	Lab Name	Date Sent to Lab
	Shipment Method	
SPLIT WITH	Name (s)	
	Organization (s)	
Other		

CDM Camp Dresser & McKee Inc.

GROUNDWATER SAMPLING RECORD

Sample ID ~~8MW~~ | Well No. 8MW06

Project ESTRP Subase Bangor	Date 01/23/01
Project No. 4200-31212	Sampled By LAN / PJE
Weather	Reviewed By

PURGING

Depth to Water (TOC) 25.25	Time 0715	Comments	
Water Volume in Casing	Total Well Depth (TOC)		
Volume Purged Before Sampling	Screened Interval (TOC)		
Purging Method	Purge Volume Measurement Method		

Time	Flow Rate	Cumulative Volume	Temp (°C)	Specific Conductance (microsiemens/cm)	pH	ORP ~~Turbidity~~	Dissolved Oxygen	Comments
1121	.4 lpm		8.44	779.3	6.96	-136	.76	
1126			14.42	781.9	6.93	-148	.06	
1150			14.40	793.9	6.92	-153	0	
1201			14.48	793.9	6.91	-153	0	
1215			14.52	791.9	6.91	-153	0	

SAMPLING

Sampling Method

Analytical Matrix ☐ Yes ☐ No ☐ Attached Time Sampled

Sample Container	Preserved By	At What pH	Filter Type	Cooled By

SAMPLE DATA

Appearance/Odor	
pH (last stabilized)	Temperature (°C)
Eh (millivolts)	Specific Conductance (microsiemens/cm)
OVM-PID Headspace (ppm)	Comments

DISPOSITION

Chain-of-Custody ☐ Yes ☐ No		Chain of Custody ID
Duplicate Sample ID		Replicate Sample Nos.
ANALYTICAL LAB	Lab Name	Date Sent to Lab
	Shipment Method	
SPLIT WITH	Name (s)	
	Organization (s)	
Other		

Date: 01/25/01
Well: 8MW24
Location: Bunker Subpase
Weather: Clear, 30°
Sampled by: LAN/DJE
DTW: 25.46 below casing Time: 0733
Pump on: BS ~~0800~~ DHA 0754 ~~Time:~~
DHA Start Time: 0818
BS Start Time: 0756

DHA start time. 0818

H_2: 11.6 ppm = 93.6 mV
used GLE with gas discharge mounted in side of tube (not nozzle)
PHA
400ml/min

H_2 and CO Sampling Record

Method	Time	Elapsed	DHA Step	Inj. Time	H_2 mV	CO	BS Inj Time	H_2	CO
BS	0835	29					0821	116.1	
DHA	0836	8	3	0832	65.5			~~6~~	
BS	0844	48					0848	116.2	30.8
DHA	0845	27	3	0850	87.3	37.1			
BS	0908						0911	110.6	22.4
DHA	0909	51	3	0914	92.1	36.5			
Standard	0918	H_2 = 93.6							
DHA	0923	64		0930	87.7				
BS	0924			~~0933~~			0932	109.6	9
DHA	0935	ADVANCE TO STEP 4							
		76							
DHA	0940	Reading is 95			36.1	267.5			
DHA RATE =		10.1543 nM							

Groundwater Sampling Record

Time	Elapsed	Flow Rate	Cum Vol	Temp (C°)	Spc Cond	pH	ORP	DO	Comments
0754	0	400 ml/min	0	14.03	569.1	6.59	-27	0.96	DTW = 25.46
0800	6		.75 gal	15.99	581.7	6.73	-74	3.1	
0809	15			16.64	587.0	6.74	-117	0.19	
0815	21		2 gal	16.95	599.8	6.75	-129	~~1.3~~	
0837	43			17.13	608.6	6.79	-138	~~.5~~	DTW 25.57
0907	63			17.22	616.8	6.80	-142	~~.3~~	
0935				17.23	623.5	6.34	-141	0.02	
0956	Pump off ≈ 5 mins								DTW 25.46

Date: 01/25/01
Well: EMW 47
Location: Subase Bangor
Weather: Sunny, 30s
Sampled by: LAN PSE
DTW: 25.43' bgs (TOC)
Pump on: ~~HA @ 1033~~ BS @ 1033
DHA Start Time: 1051
BS Start Time: 1050

restart at 10.48

Time: 1020
Time:
DHA pump on @ 10
off @ 1204

H_2 11.6 ppm = 93.6 mV
used GLE with tube
inside of tube

N_2 = 30 psig
~~Base~~ Baseline = 15 mV

H_2 and CO Sampling Record

Flow = 400 ml/min

Method	Time	Elapsed	DHA Step	Inj. Time	H_2	CO	BS Inj Time	H_2	CO
BS	1101	11					1103	27.2	96
DHA	1101	10	3	1105	30.7				
BS	1109						1119	No value	
DHA	1110	19	3	1121	18.0				
BS	1132	42					1138	31.2	
DHA	1134	42	3	1140	22.1	169.7			
BS	1150	60					1156	21.4	145
DHA	1150	59	3	1159	20.7	~~140~~ Advance to Step 4 @			1203
BS	1207						1213	23.2	135
DHA	1208		5	1214	21.2	175			
		0 H result		=	3.1766 mM				

Groundwater Sampling Record

Time	Elapsed	Flow Rate	Cum Vol	Temp (C°)	Spc Cond	pH	ORP	DO	Comments
1036	3	~~400~~		12.51	482.9	6.4	-6	0.78	Eff. DTW = 25.4
1049	13	400		16.80	517.9	6.38	-41	0.75	
1108	35			17.60	526.6	6.38	-88	0.11	
1127	54			17.73	528.0	6.43	-98	0.03	DTW=25.75
1148	75			17.84	532.3	6.45	-110	0.02	DTW=25.75
1202				17.57	537.7	6.51	-120	0.01	
1248									DTW 24.43

Date: 01/25/01
Well: 8MW30
Location: subase bangor
Weather: sunny, 30s
Sampled by: LAN / PJE
DTW: 25.45' bgs mp=TOC Time: 1245
Pump on: BS @ 1305 DHA 1305 Time:
DHA Start Time: 1314
BS Start Time: 1310

New Carulite.
H_2 11.6ppm = 93.6mV
used GLE with side tube
N_2 = 250psig
Baseline = 22.7mV

H_2 and CO Sampling Record

DHA flow rate = 450 ml/m

Method	Time	Elapsed	DHA Step	Inj. Time	H_2	CO	BS Inj Time	H_2	CO
BS	1325	15					1328	190.7	
DHA	1326	12	3	1331	121.0				
BS	1340	30					1347	233.6	
DHA	1341	27	3	1349	155.6	24.9			
BS	1357	47			148.5		1404	203.9	
DHA	1358	44	3	1407	~~[illegible]~~	@ 2.0			
Advance to Step 5 @ 1413									

pH result = 25.97 09 m M

Groundwater Sampling Record

Time	Elapsed	Flow Rate	Cum Vol	Temp (C°)	Spc Cond	pH	ORP	DO	Comments
1308	3	450		16.29	497.1	7.12	-216	0.36	black tint
1315	@ 1.3			16.68	514.5	7.13	-248	0.08	
1322	17			16.59	530.3	7.06	-245	0.04	
1336	31			16.62	540.5	7.10	-243	0.01	DTW=25.57
1354				16.69	551.9	7.06	-244	0.00	DTW=25.57
1441									DTW= 25.38

Date: 01/25/01
Well: 8MW 53
Location: Subase Bangor
Weather: cloudy, 30s
Sampled by: LAN/PSE
DTW: 24.95 below TOC Time: 1526
Pump on: BS 1544 DHA 1545 Time:
DHA Start Time: 1549
BS Start Time: 1549

N = 1500 psi
Baseline 30 mV

used GLE with side tube.
H_2 11.6 ppm = 93.6 mV
New cavitte
Flow to DHA 500 mls/min

H_2 and CO Sampling Record

Method	Time	Elapsed	DHA Step	Inj. Time	H_2	CO	BS Inj Time	@ H_2	CO
BS	1557	8					1559	245.1	
DHA	1557	8	3	1601	140.6				
BS	1607	18					1608	265.3	38.5
DHA	1607	18	3	1609	missed	234	~~1610~~		
BS	1616	27					1624	missed	
DHA	1616	27	3	1626	204.8				
BS	1630	41					1631	278.1	
DHA	1630	41	3	163.	246.0				
BS (1)	1638	49							
DHA (1)	1638	49	3	= Lost sample =					
BS (2)	1643								
DHA (2)	1643								
Accidentally pulled out tube from GLE. Start Run again									

Groundwater Sampling Record

Time	Elapsed	Flow Rate	Cum Vol	Temp (C°)	Spc Cond	pH	ORP	DO	Comments
1546	2	500 ml/m		24.93	759.6	6.92	-198	0.58	off
1551	7			24.45	753.4	6.93	-203	0.28	"
1617	28			22.86	757.6	6.96	-211	0.05	DTW 24.93
1637	48			22.69	744.4	6.89	-215	0.02	

Date: 01/25/01
Well: 8MW53
Location: Subase Bangor
Weather: 30-cloudy
Sampled by: LAN/PJE
DTW:
Pump on: 1655
DHA Start Time: 1656
BS Start Time: 1656

Time:
Time:

RUN #2

H2 11.6 ppm = 93.6 mV

New carulite
used GLE with tube in nozzle

H_2 and CO Sampling Record

N = 1400 psi

Method		Time	Elapsed	DHA Step	Inj. Time	H_2	CO	BS Inj Time	H_2	CO
BS	A	1701	5					1818	23.1	
DHA	B	1701	5	3	1819	47.9				
BS	C	1706	10					1820	60.2	
DHA	D	1706	10	3	1821	110.8				
BS	E	1711	15					1822	107.7	
DHA	F	1711	15	3	1823	101.6				
BS	G	1716	20					1824	128.8	
DHA	H	1716	20	3	1825	120.0				
DHA		1717	Advance DHA to			step	4			
~~DHA~~		~~1722~~		~~5~~						

DH result = 18.9819

MGC was soaked at end, half of MS was wet.
High result due to CO production

Groundwater Sampling Record

Time	Elapsed	Flow Rate	Cum Vol	Temp (C°)	Spc Cond	pH	ORP	DO	Comments
1656				22.19	734.3	6.87	-207	0.07	
1703				21.66	732.2	6.86	-213	0.04	
1708				22.40	729.5	6.87	-216	0.02	
1713				22.63	726.9	6.85	-219	0.01	

Date: 01/26/01
Well: EMW 42
Location: Subase Bangor
Weather: 30°, clear
Sampled by: LAN / PJE
DTW: 24.76
Pump on: BS 0847 DHA 0847
DHA Start Time: 1020 → restart 0946 → restart 0946 → restart 1017 → 1042 restart
BS Start Time: 1020 → restart 1017 → 1042 restart

1115 Sulfide 0.00 ppm
0.00 ppm

Time: 0754
Time:

Flow initial = 500 ml/min
Flow @ end = 300 ml/min (tubing pinched)

H_2 and CO Sampling Record

Method		Time	Elapsed	DHA Step	Inj. Time	H_2	CO	BS Inj Time	H_2	CO
BS	A	1057 ~~1030~~	10					1034	8.5	
DHA	B	1057 ~~1030~~	10	3	1035	24.1				
BS	C	1105	20					1036	15.8	
DHA	D	1105	20	3		16.8				
BS	E	1115	30						7.1	
DHA	F	1115	30	3		16.6				
BS	G	1125	40						5.4	
DHA	H	1125	40			13.6				
									(0.45 nM)	
DHA = 1.3652 nM				BS OH =		(5.4 / 111.25)	(0.2)	(11.6) =	0.45	
				GLE PH =		(13.6 / 111.25)	(0.2)(11.6) =		1.13	
		DHA / BS Δ% =				1.3652 − 0.45 / 0.45		=	203	
		DHA / GLE Δ% =				1.3652 − 1.13 / 1.13		=	20.8	

Groundwater Sampling Record

Time	Elapsed	Flow Rate	Cum Vol	Temp (C°)	Spc Cond	pH	ORP	DO	Comments
0850	3	500 ml/m		14.77	546.9	6.24	-20	0.70	off
0915	27			15.02	707.2	6.38	-7	0.03	
Turn pumps off				+					
1021				14.52	770.5	6.35	-25	0.10	
1030				14.78	796.5	6.34	-25	0.01	
Turn pumps on				14.79	825.3	6.34	-28	0.01	
1050	8			14.51	829.5	6.38	-31	0.00	
1057									
1115				14.59	823.8	6.37	-25	0.00	

Date: 01/26/01
Well: MW03
Location: Subase Bangor
Weather: upper 30's sunny
Sampled by: DJE/LAN
DTW: 24.54 Time: 1158
Pump on: BS=1212 DH=1212 Time:
DHA Start Time: ~~1225~~ restart@ 1341
BS Start Time: ~~1225~~ restart@ 1341

Sulfide 0.00 ppm
Ferrous Fe 29.6 ppm *
38.3 ppm *
* values may be higher than actual due to color in water

DHA Flow 450 ml/min

H_2 and CO Sampling Record

Npsi = 900

Method	Time	Elapsed	DHA Step	Inj. Time	H_2	CO	BS Inj Time	H_2	CO
BS A	~~1235~~ 1351	10					1517	13.8	
DHA B	~~1235~~ 1351	10	3	1518	23.6				
BS C	1401	20					1519	9.4	
DHA D	1401	20	3	1520	24.5	DHA flow has dropped to 300 ml/min			
BS E	1411	30					1521	12.5	
DHA F	1411	30	3	1522	12.8				
BS G	1416	~~34~~ 35					1523	12.8	
DHA H	1415	34	3	1524	13.7	DHA stopped pumping water			
								(1.1 nM)	
		DHA result =			16.7206				
	BS OH =		(12.8/111.25)	(11.6)(0.8) =		1.07			
	GLE OH =		(13.7/111.25)	(11.6)(0.8) =		1.14			
DHA / BS Δ%	=		16.72 − 1.07 / 1.07		=	1,463			
DHA / GLE Δ%	=		16.72 − 1.14 / 1.14		=	1,367			

Groundwater Sampling Record

Time	Elapsed	Flow Rate	Cum Vol	Temp (C°)	Spc Cond	pH	ORP	DO	Comments
1220	8	~~500~~ 450	ml/min	13.18	697.7	6.33	-131	0.23	eff + turb
1225	13			14.35	696.5	6.23	-144	0.07	
1250				14.35	706.8	6.26	-151	0.04	
pumps off 1325	Both pumps on								
tube collapsed ~~1338~~		~~450~~							
1338		500 ml/m		14.00	728.1	6.36	-108	0.29	Sheen, poss bacteria
1350				14.43	740.6	6.31	-110	0.09	
1402				14.43	755.8	6.32	-112	0.06	
1412		400 ml/m		14.24	768.7	6.34	-111	0.09	

Date: 01/26/01
Well: 28-MW01
Location: Bangor Subase
Weather: Sunny, Low 40s
Sampled by: PJE/LAN
DTW: 28.84 Time: 1521
Pump on: 1520 (pumps did not actually draw water until 1542) Time:
DHA Start Time: 1550
BS Start Time: 1550

1620 Sulfide 0.00 ppm
0.00 ppm
Ferrous Fe 1.3 ppm
1.4 ppm

H_2 and CO Sampling Record

DHA flow = 300 ml/m

Method	Time	Elapsed	DHA Step	Inj. Time	H_2	CO	BS Inj Time	H_2	CO
BS A	1600 ~~1550~~	10					1631	83.1	
DHA B	1600	10	3	1633	42.0		~~1632~~		
BS C	1610	20					1633	53.7	
DHA D	1610	20	3	1634	40.6				
BS E	1620	30					missed - did not load sample properly		
DHA F	1620	30	3	1636	40.8				
BS G	1630	40					1637	65.8	
DHA H	1630	40	3	1638	49.1			(5.5 nM)	
DHA Restart @	1646	Baseline zero = 317			flow = 500 ml/min				
DHA A	1651	5		1704	42.6				
DHA C	1656	10		1705	23.6	- Already switched to Step 4, may be deleted			
	1656	switch to step 4							
DHA B	1701		5	1703	26.6	~~47.6~~ 50.6			
	Result 9.3 nM								
Cal gas	1710			1710	116.1	} 111.25 avg.			
	1711			1711	106.4				

Groundwater Sampling Record

Time	Elapsed	Flow Rate	Cum Vol	Temp (C°)	Spc Cond	pH	ORP	DO	Comments
1547	5	300 ml/m		29.7	1000	6.73	-109	0.78	set. time an eff.
1552	10			27.56	1003	6.73	-113	0.23	
1602	20			26.63	1002	6.72	-118	0.15	
1612	30			26.26	1010	6.71	-121	0.13	
1622	40			25.82	1019	6.70	-124	0.13	
	BS DH = (5.8/111.25)(11.6)(0.8) = 5.49 nM								
	GLE DH = ((42.6/111.25))(11.6)(0.8) = 3.55 nM								
	DHA/BS Δ% = (9.3 − 5.49)/5.49 = 69%								
	DHA/GLE Δ% = (9.3 − 3.55)/3.55 = 162%								

Date: 02/01/01
Well: 8MW30
Location:
Weather:
Sampled by: PSHLAN
DTW: 25.43 Time: 1313
Pump on: 1334 Time:
DHA Start Time: 1336 - Step 3 Start @ 1338 → Restart Step 3 @ 1345 (hose came off first time
BS Start Time: No BS ran

H_2 and CO Sampling Record

Flow rate = .55 L/m

Method	Time	Elapsed	DHA Step	Inj. Time	H_2	CO	BS Inj Time	H_2	CO
DHA A	[illegible]	5	3	1433	52.4	49			
B	[illegible]	10	3	1434	118.9				
C	[illegible]	15	3	1435	179.5				
E	[illegible]	20	3	1436	134.4				
F	1415	30	3	1437	314.9	→ 17.8 nM			
G	1425	40	3	1438	237.3				
H	1430	45	.5	1503	80.8	104.1			
DHA					57.7 216 nM	(224 ppb i gh)			
Standard gas				1441	9.2				
Standard gas	11.6 ppm				97.4				
Standard gas	H_2/N_2				119.7	125.45 ppb			
Standard gas					127.2				

Groundwater Sampling Record

Time	Elapsed	Flow Rate	Cum Vol	Temp (C°)	Spc Cond	pH	ORP	DO	Comments
Did not run Hydrolab. Observed effervescence + black tint, odor.									
Black tint may be from new ~~[illegible]~~ Norprene hosing replacing									
Clear Tygon.									
Recorded a black tint in last run at this well									

Date: 020121
Well: 8MW30
Location:
Weather: freezing cold, windy (upper 30s), overcast
Sampled by: LAN/PJE
DTW: Time:
Pump on: Time:
DHA Start Time: 1535
BS Start Time:

Comments. 2nd run for DHA. Run 1 gave erratic readings

H_2 and CO Sampling Record

GLE Flow rate = 650 ml/m

Method	Time	Elapsed	DHA Step	Inj. Time	H_2	CO	BS Inj Time	H_2	CO
DHA A	1540	7~~8~~	3		177				
B	1545	10	3		197.6				
C	1550	15	3		223.8	19.0nM			
D	1555	20	3		213.4				
E	1605	30	3		239.4	13.76nM			
F	1615	40	3		183.1				
G			5		40.1	21.1	switched to step 4 @	40nM.	
DHA	36.9819	nM						248.1 =	18.7nM.
BS A		1:20							
Restart DHA @	1645	switch to step 4 @			15 min	GLE	one.		
DHA B	1700	15			176.6				
DHA	27.3234nM				= 13.3nM.				
Restart DHA @		~~17~~ 1732 -			Add GAC to Carulite.				
DHA		15	3		126.9	= 9.54nM			
DHA	23.3967nM								

Groundwater Sampling Record

Time	Elapsed	Flow Rate	Cum Vol	Temp (C°)	Spc Cond	pH	ORP	DO	Comments

Date: 02/02/01
Well: 8MW30
Location: Subase Bangor
Weather: partly cloudy
Sampled by: LAN / PJE
DTW: 25.40' bgs Time:
Pump on: 0809 Time:
DHA Start Time: 0817
BS Start Time: ~~Dan~~ Did not run Bubble Strip

H_2 and CO Sampling Record

flow rate = 550 mL/min

Method	Time	Elapsed	DHA Step	Inj. Time	H_2	CO	BS Inj Time	H_2	CO
DHA A		0	3		5.1				
B		10	3		2.3	RGD2 not working correctly			
C		15	3		6.2				
D		20	3		138.7				
			Standards -		157	testing RGD2			
DHA did not finish, stopped @					153				
	900 mV				156	avg = 155			
Rerun 8MW30 flow rate = 550 mL/min									
Pump on @ 0950									
Start analyzer 0954									
DHA A	0959	5	3	1018	145.4 = 8.71 nM				
B	1004	10	3	1020	—	cannot get reading - RGD2			
C	1009	15	3	1021	—	not working			
D	1014	20	3	1203	54.4				
DHA = 29.3 nM									
	Standard			1027	—				
Conversion				1200	180.4	→ Ave = 174.8			
				1202	169.2				

29.3 (0.5352) = 15.7 nM

Groundwater Sampling Record

Time	Elapsed	Flow Rate	Cum Vol	Temp (C°)	Spc Cond	pH	ORP	DO	Comments

AGI TECHNOLOGIES

FIELD INVESTIGATION DAILY REPORT

Sheet 1 of

Project ESTCP — Job No. 4000-31217
Location Ft Lewis (Site 2) — Date 2/19/01
Equipment Rental — Company — To
Equipment Hours — F.E. Time from: — to: — By

0800 Lisa Nickens and Patrick Evans onsite to conduct dissolved hydrogen analysis from groundwater in 10 wells
Meet Robin, site superintendant
Discuss health and safety; Pat informs Robin that EDM will operate under CDM H+S plan. Robin says Level D required for site. Will bring drums + will move when full
Meet Steve Cox, USGS. Conducts site walk and shows us locations of wells.
0900 Set up RGD2. Power supply is in Steve Cox's trailer

Cal baseline = 20 mV
factor = 6.8604

Setup: used Carboxen 1000/Carbosieve III to remove methane.

~~H — Carulite/MS — MGC~~
Catalyst: MGC → MS → Carulite → Carboxen 1000/carbosieve III
Cal

1117 Repeat Cal.
Base line = 63.6 mV
factor = 12.633 May be due to M-sieve Carulite being switched

1131 Repeat Calibration
Baseline: 187
Factor = abort
epoxy is not sealing carulite

Visitors:
Attachments
Distribution

☑ Continued
Initial

f-d.01/7-94

AGI TECHNOLOGIES

FIELD INVESTIGATION DAILY REPORT

Sheet 2 of

Project ESTCP Job No. 4000-31212
Location Site 2 - Ft. Lewis Date 2/19/01
Equipment Rental Company To
Equipment Hours F.E. Time from: to: By

1135 Attempt to calibrate
15.09 cal factor
1230 Move equipment to background well
1242 Pump on 450 mL/min. Shut off, problems w/power supply to DHA. Switch vans. Run 2 more runs.
1530 Attempt SP9. Has been hit (no longer has monument). 1/4 tubing sticking up out of ground, no visible casing. Could not pump water, move to SP5

Visitors:
Attachments ☐ Continued
Distribution Initial

fd.91/7-94

AGI TECHNOLOGIES

FIELD INVESTIGATION DAILY REPORT

Sheet 1 of 2

Project ESTRP | Job No. 4000 31212
Location 71 Lewis - Site 2 | Date 2/20/01
Equipment Rental _____ Company _____ To _____
Equipment Hours _____ F.E. Time from: _____ to: _____ By LAN

0830 Calibrate DHA onsite 0755
baseline = 34
Step 2 flow = adjust to 1 Lpm
N pressure = 1350
Cal gas pressure = 1400
Cal factor - did not get factor

0840 Calibrate DHA
Cal baseline = 75
Could not calibrate
0850 change sensor
0900 Calibrate DHA
baseline = 24
Cannot get DHA to calibrate, PUE found air leak in system
Look for air leak
1315 Calibrate DHA
baseline = 32
in Step 5 Stopped going up at 820
Check valves, magnahelic indicates no leak in system.

1405 baseline 343 * used old mgc, molec. sieve, canuele; did not change out
cal factor 7.353
1420 baseline 32 n pressure = 600 psi
cal factor 3.734 cal gas = 1400 psi new cartridges
1430 baseline 35 new cartridges
cal factor
Calibration failed

Visitors:
Attachments ☐ Continued
Distribution Initial

fld.01/7-94

AGI TECHNOLOGIES

FIELD INVESTIGATION DAILY REPORT

power supply
3mL syringes

Sheet 2 of 2

Project ESTCP | Job No. 4000-31212
Location Ft Lewis - Site 2 | Date Feb 20
Equipment Rental _____ Company _____ To _____
Equipment Hours _____ F.E. Time from: _____ to: _____ By _____

1445 Calibrate DHA - DHA turned off 2x when starting Step 3
Baseline
Calibration failed (#s stopped going up)
1500 ~~[illegible]~~ Refill Nitrogen
Set up DHA to calibrate.
Power supply problems. DHA shuts off in Step 1
or Step 3
1515 Baseline 67
~~Cal Factor~~
Calibration failed. Stopped @ 150 in Step 5
Check system again for leaks
Valve 1 leaking
Change valve, replace w/ new
Nitrogen is leaking thru valve - talked to
Pat; will replace tomorrow
1700 Start calibration w/ new valve, new cartridges
baseline = 19
Calibration failed - numbers stopped going
up at 630. Out of N due to leak - possible cause?
1720 Clean up and offsite.

Visitors: Ron Harris, Steve Cox

Attachments ☐ Continued

Distribution Initial

fld.01/7-94

AGI TECHNOLOGIES

FIELD INVESTIGATION DAILY REPORT

Sheet 1 of

Project ESTCP | Job No. 4000 31212
Location Ft Lewis - Site 2 | Date 2/21/01
Equipment Rental | Company | To
Equipment Hours | F.E. Time from: | to: | By LAN/PJE

0750 LAN onsite, set up equipment
0810 PJE onsite
Place semiconductor on pump to help w/ power supply issues, not successful
0932 baseline 32 Run calibration
Calibration failed, numbers stopped going up at 25
0942 Change cartridges, restart calibration
baseline 63
Calibration failed
discover leak in system, valve 2. N leaked out
clean valve (teflon tape inside of base)
1028 Run calibration
baseline 28
Calibration failed; another leak, possibly in cartridges. Test new cartridges for leaks, install.
1055 Run calibration
Still having problems w/ DHA power (shut off in beginning of Step 3
Run calibration
baseline = 111
Stopped going up around 1200
1108 Rerun calibration w/ 2 MGC in tandem.
Baseline = 200
Cal factor = 18.018
1120 Rerun
Baseline 47
Cal factor = 18.109

Visitors:

Attachments ☐ Continued

Distribution Initial

ffd.01/7-94

AGI TECHNOLOGIES

FIELD INVESTIGATION DAILY REPORT

Sheet 1 of ____

Project		Job No.	4000-31212
Location		Date	2/21/01
Equipment Rental	Company	To	PSE
Equipment Hours	F.E. Time from: to:	By	

1210 - Calibrated Hydrolab
9.00 was 10.690 — recalibrated.
ORP was 189 mV, expected 192, did not recalibrate
4.0 pH was 3.88 - recalibrated.
7.0 pH was 7.01
1.412 conductivity was 1379 - recalibrated

Use Steve Cox's Trace Analyzer since ours is broken. Pat tested analyzer, will use 2 mL sample at 10-20-30-40 minutes.

1440 Run calibration w/ original reusable cartridges filled in thirds 5mL MGC, 5mL MS, 5mL Carulite.
baseline = 254 The 4 in x 0.5" ø cartridge w/
Cal factor = 25.590 Carboxen 1000
1450 Calibrate
baseline = 35
cal factor = 22.311
1507 Start DHA and pump

To use SC's Trace Analyzer
[Level] → load sample → plot on → INJ A
↑ if above 1000, hit "zero" on analyzer

Visitors:

Attachments ☐ Continued

Distribution Initial

fld.01/7-94

CDM Camp Dresser & McKee Inc.

FIELD INVESTIGATION DAILY REPORT

Sheet 1 of

Project ESTCP
Project No. 4000 51212
Location Ft Lewis
Date 2/22/01
Equipment Rental
Company
To
Equipment Hours
F.E. Time from:
to:
By UAN/PJE

0705 Onsite to conduct groundwater sampling w/ DHA and Bubble Strip
Fill N Tank, PJE calibrate Steve Cox's Trace Analyzer
0735 Begin calibration
Baseline = 53
Cal factor = 27.583
0749 Move to background well to sample 11 using DHA & BS

Calibration info from PJE
10.2ppm H_2/N_2
2 ml injections
Area
#1 2787920
#2 2827941
ave 2807930.5

Visitors:
Attachments
☐ Continued
Distribution
Initial

rev 9/00
forms\field\field investigation daily report.p65

CDM Camp Dresser & McKee Inc.

FIELD INVESTIGATION DAILY REPORT

Sheet 1 of

Project ESTCP
Project No. 4000-31212
Location Ft Lewis - Site 2
Date 2/23/01
Equipment Rental
Company
To
Equipment Hours
F.E. Time from:
to:
By LAN / PJE

0800 LAN + PJE on site to conduct water sampling / hydrogen analysis
0820 Begin calibration
baseline = 19
Cal factor = 22.886
0840 Begin Sampling ST3
PJE calibrated Trace Analyzer:
10.2 ppm H_2/N_2

#	Area
1	2630485
2	2659411

Conduct hydrogen sampling at the following wells

Visitors:
Attachments
☐ Continued
Distribution
Initial

rev 9/90

forms/field/field investigation daily report.doc

CDM Camp Dresser & McKee Inc.

FIELD INVESTIGATION DAILY REPORT

Sheet 1 of 1

Project ESTCP | Project No. 4000-31212
Location Ft Lewis | Date 2/26/01
Equipment Rental _____ Company TEG | To PSE
Equipment Hours _____ F.E. Time from: _____ to: _____ | By LAN

0700	LAN onsite	
0720	PSE + TEG (drillers) onsite	
0804	Start first hole, ST3	
1120	Start ST7	
1335	Start SP07	
1500	Start 2 P22	Strataprobe
1640	Drillers finished w/	inner rod = 1"
	cleanup	outer rod = 2"
1705	LAN offsite	liner = 1 1/4"

Visitors:

Attachments ☐ Continued

Distribution Initial

CDM Camp Dresser & McKee Inc.

FIELD INVESTIGATION DAILY REPORT

Sheet 1 of 1

Project ESTCP Site 2 Soil Sampling Project No. 4000 31212
Location Ft. Lewis Date 2/27/01
Equipment Rental _____ Company TEG To _____
Equipment Hours _____ F.E. Time from: _____ to: _____ By LAN

0710 LAN onsite, PJE and drillers already onsite
0720 Begin drilling w/ Strathprobe at SP5.
0925 Begin drilling background well
1125 Begin drilling MW3
~~Begin ST9~~ PJE offsite
1245 Lunch
1315 Begin drilling ST9, drill 3 holes.
Hole 1 - refusal @ 24'
Hole 2 - refusal @ 28'
Hole 3 - refusal @ 28'
1645 Drillers finished for day
1705 Load up, LAN offsite

Visitors: Ricn Wilson

Attachments ☐ Continued

Distribution Initial

rev 5/00 forms\field\field investigation daily report p65

CDM Camp Dresser & McKee Inc.

FIELD INVESTIGATION DAILY REPORT

Sheet 1 of 1

Project ESTCP Site 2 Project No. 4000 - 31212
Location Ft Lewis Date 2/28/01
Equipment Rental _____ Company _____ To _____
Equipment Hours _____ F.E. Time from: _____ to: _____ By LAN

0655 LAN onsite
0715 TEG onsite
0720 Begun drilling w/ Stratoprobe @ PZ1
0730 Rob (Navy) onsite
Elevation according to Steve Cox - 280' above sea level, based on log data
~~0750 Start drilling PZ1~~
0950 Start drilling SP10
1055 Large earthquake
1200 Finish sampling. Drillers demob and LAN finish notes, record samples and pack for shipping

Visitors:
Attachments ☐ Continued
Distribution Initial

rev 9/00 formsfield\fieldinvestigation dailyreport p65

Date: 2/19/01
Well: SP5
Location: Ft Lewis
Weather: Sunny, 40s
Sampled by: LAN PJE
Initial DTW:
DHA Pump on: 1542
DHA Start Time: 1545
BS Pump on: NA
BS Start Time:

N_2 Pressure: 550 adjusted to 1 Lpm
Cal Factor:
Trace Analyzer Standard [C]:
Response (mV):
Time:
Flow Rate: .5 L/M Baseline 51
Flow Rate:

CDM
Camp Dresser & McKee Inc.

Discharge
4 gals
1

Used short GLE

H_2 and CO Sampling Record

Method/Sample	Time	Elapsed	DHA Step	Inj. Time	H_2	CO	BS Inj Time	H_2	CO

DHA Result: .4707 nM

Short GLE filled w/water; water entering top tube of GLE

Sulfide (ppm)

BS DH:

GLE DH:

DHA/BS %Diff:

Fe 2+ (ppm)

DHA/GLE %Diff:

Groundwater Sampling Record

Time	Elapsed	Flow Rate	Temp (C°)	Spc Cond	pH	ORP	DO	DTW/Notes
1546	4	.5 L/m	8.26	201.2	6.21	-106	1.39	turbid
1550			8.32	202.5	6.15	-115	.22	water clearing
1556			8.23	201.8	6.15	-120	.14	
1600			8.14	202.4	6.24	-125	.08	
1608			8.24	202.5	6.14	-130	.05	
1618			8.18	202.1	6.14	-134	.02	

Date: 2/19/01 N$_2$ Pressure: 400

Well: 7t Lewis Cal Factor:

Location: SP5 Trace Analyzer Standard [C]:

Weather: Sunny, 30s Response (mV):

Sampled by: LAN

Initial DTW: unable to measure Time: /

DHA Pump on: 1640 Flow Rate: .5 lpm Baseline 42

DHA Start Time: 1645

BS Pump on: NA Flow Rate: /

BS Start Time:

Used Longer GLE

CDM

Camp Dresser & McKee Inc.

H$_2$ and CO Sampling Record

Method/Sample	Time	Elapsed	DHA Step	Inj. Time	H$_2$	CO	BS Inj Time	H$_2$	CO

DHA Result: .1287 nM

Sulfide (ppm)

BS DH:

GLE DH:

DHA/BS %Diff:

Fe 2+ (ppm)

DHA/GLE %Diff:

Groundwater Sampling Record

Time	Elapsed	Flow Rate	Temp (C°)	Spc Cond	pH	ORP	DO	DTW/Notes
1647		.5Lpm	8.08	202.8	6.16	-140	.03	turbid on startup, cleared within 1 minute
1656			8.17	201.9	6.17	-142	0.00	

Date: 2/19/01 N_2 Pressure: 1200

Well: BKGND Cal Factor: 15.09

Location: Ft Lewis Trace Analyzer Standard [C]:

Weather: Sunny/40s Response (mV):

Sampled by: PJE, LAN

Initial DTW: Could not measure Time:

DHA Pump on: 1244 Flow Rate: 450 mL/min

DHA Start Time:

BS Pump on: NA Flow Rate:

BS Start Time: NA

CDM

Camp Dresser & McKee Inc.

H_2 and CO Sampling Record

Method/Sample	Time	Elapsed	DHA Step	Inj. Time	H_2	CO	BS Inj Time	H_2	CO

DHA Result: Abort run, analyzer keeps shutting off. Switch vans, run again

BS DH:

GLE DH:

DHA/BS %Diff:

DHA/GLE %Diff:

Sulfide (ppm)

Fe 2+ (ppm)

Groundwater Sampling Record

Time	Elapsed	Flow Rate	Temp (C°)	Spc Cond	pH	ORP	DO	DTW/Notes
1245	1	450mL	10.33	105	6.77	75	14.23	5 Gallons of discharge;
1249	5	600mL	10.39	103.8	6.84	74	14.02	
1252	8		10.80	102.3	6.77	74	13.89	

Date: 2/19/01

Well: Background

Location:

Weather: Sunny

Sampled by:

Initial DTW:

DHA Pump on: 1346

DHA Start Time:

BS Pump on: NA

BS Start Time: NA

N_2 Pressure: 1150

Cal Factor:

Trace Analyzer Standard [C]:

Response (mV):

Time:

Flow Rate: .5 Lpm initial reading 32.6

Flow Rate:

CDM

Camp Dresser & McKee Inc.

Discharge
4 gal buckets
11
Total discharge = 9 gallons

H_2 and CO Sampling Record

Method/Sample	Time	Elapsed	DHA Step	Inj. Time	H_2	CO	BS Inj Time	H_2	CO

DHA Result: .0565 Did not collect gas samples; RAD2 was not working properly

Sulfide (ppm)

BS DH:

GLE DH:

DHA/BS %Diff:

Fe 2+ (ppm)

DHA/GLE %Diff:

Groundwater Sampling Record

Time	Elapsed	Flow Rate	Temp (C°)	Spc Cond	pH	ORP	DO	DTW/Notes
1348	2	.5	10.11	103.5	6.74	44	14.17	
1352	6	.5	10.13	103.3	6.68	53	13.59	
1355	9	.5	10.20	102.7	6.72	58	13.75	
1402	16		10.31	103.1	6.72	70	13.47	
1410	24		10.43	103.0	6.69	75	13.92	

Date: 2/19/01 N_2 Pressure: 1100

Well: Background Cal Factor:

Location: Trace Analyzer Standard [C]: NA Trace Analyzer broken

Weather: Sunny 30s Response (mV):

Sampled by: LAN / PJE

Initial DTW: Could not measure Time: -

DHA Pump on: 1440 Flow Rate: .5 L/m

DHA Start Time: NA

BS Pump on: NA Flow Rate: -

BS Start Time: NA

CDM
Camp Dresser & McKee Inc.

H_2 and CO Sampling Record

Method/Sample	Time	Elapsed	DHA Step	Inj. Time	H_2	CO	BS Inj Time	H_2	CO

DHA Result: .0847 nM

Did not run gas samples because trace analyzer not working correctly

Sulfide (ppm)

BS DH:

GLE DH:

DHA/BS %Diff:

Fe 2+ (ppm)

DHA/GLE %Diff:

Groundwater Sampling Record

Time	Elapsed	Flow Rate	Temp (C°)	Spc Cond	pH	ORP	DO	DTW/Notes
1447	7	.5	9.94	103.4	6.69	81	14.68	
1500	20		9.95	103.6	6.72	86	13.47	

Date: 2/21/01
Well: SP5
Location: Ft Lewis
Weather: 40s, cloudy
Sampled by: LAN
Initial DTW: unknown
DHA Pump on: 1230
DHA Start Time: ~~1244~~
BS Pump on: 1230
BS Start Time: ~~1230~~ 1235

N_2 Pressure:
Cal Factor:
Trace Analyzer Standard [C]: 10.2ppm
Response (~~mV~~): 2745590
2866103
~~2862942~~
~~2862942~~
2862942
Ave = 2,824,878
Time:
Flow Rate: 400 mL
Flow Rate: 400 mL
Injection 1235

CDM
Camp Dresser & McKee Inc.

Wastewater (gal
4+4+3+2
= 13

area / Ave response (10.2 ppm) = ppm

H_2 and CO Sampling Record

Method/Sample	Time	Elapsed	DHA Step	Inj. Time	H_2 ppm (ppm)	CO	BS Inj Time	H_2 ppm	CO
DHA		10	3		1.56				
BS	1324							2.6094	
DHA	1324	25	3		1.8579				
BS	1334							2.1238	
DHA	1334	35	3		1.7539	= 1.40312 nM			
DHA	1347		5		.1991			~~1.4549~~	
BS	1348	73						1.4549	= 1.16392 nM

DHA Result: .6319 nM

BS DH: 1.1639

GLE DH: 1.4031

DHA/BS %Diff: -45.7

DHA/GLE %Diff: -54.96

Sulfide (ppm) 224 ppm

Fe 2+ (ppm) 6.5 ppm

Groundwater Sampling Record

Time	Elapsed	Flow Rate	Temp (C°)	Spc Cond	pH	ORP	DO	DTW/Notes
1234	4	400mL	9.71	203.6	6.07	-116	0.13	odor and turbid
1250	20		9.08	207.7	6.19	-128	0.07	
1322	52		9.05	209.2	6.22	-140	0.01	
1345	75		8.93	209.9	6.14	-143	0.00	

Date: 2/21/01

Well: SPS

Location: Ft Lewis

Weather: rain, 40s

Sampled by: LAN/PJE

Initial DTW: Not available

DHA Pump on: 1502

DHA Start Time: 1503

BS Pump on: 1507

BS Start Time: 1508

N_2 Pressure:

Cal Factor: 22.3

Trace Analyzer Standard [C]:

Response (mV):

Time: —

Flow Rate: 500 mL/min

Flow Rate: 500 mL/min

CDM

Camp Dresser & McKee Inc.

2nd run

Bucket

3 + 4 + 6

13

H_2 and CO Sampling Record

Method/Sample	Time	Elapsed	DHA Step	Inj. Time	H_2 ppm	CO	BS Inj Time	H_2 ppm	CO
DHA	1523	10	3		.727				
BS	1523	15						.4945	
DHA	1533	20	3		.7429				
BS	1533	25						.7510	
DHA	1543	30	3		.7617				
BS	1543	35						.7007	
DHA	1553	40	3		.6183				
BS	1554	46						.6929	

DHA Result: 0.5736 nM

BS DH: 0.5543 nM

GLE DH: 0.4946 nM

DHA/BS %Diff: 3.48%

DHA/GLE %Diff: 15.97%

Yay!

Sulfide (ppm)

Fe 2+ (ppm)

Groundwater Sampling Record

Time	Elapsed	Flow Rate	Temp (C°)	Spc Cond	pH	ORP	DO	DTW/Notes
1514		500mL	8.32	212.9	6.14	-147	18	
1522		500mL	8.30	212.1	6.17	-148	0.00	

Date: 2/21/01 N_2 Pressure: 600

Well: SP 5 Cal Factor:

Location: Ft Lewis Trace Analyzer Standard [C]:

Weather: rainy, 40s Response (mV):

Sampled by: LAN/PJE

Initial DTW: not available Time: –

DHA Pump on: 1615 Flow Rate: 400 ml/min

DHA Start Time: 1617

BS Pump on: 1615 Flow Rate: 400 ml/min

BS Start Time: 1617

CDM

Camp Dresser & McKee Inc.

Run 3

Waste Buckets: (gallons)

7

H_2 and CO Sampling Record

Method/Sample	Time	Elapsed	DHA Step	Inj. Time	H_2 ppm	CO	BS Inj Time	H_2 ppm	CO
DHA	1627	10	3		.5930				
BS	1627	10						.5550	
DHA	1637	20	3		.6193				
BS	1637	20						.6046	
DHA	1647	30	3		.5493	0.43944 nM			
BS	1647	30						.5678	

DHA Result: .4269 nM

BS DH: .4542

GLE DH: .4394 nM

DHA/BS %Diff: -6.02%

DHA/GLE %Diff:

Sulfide (ppm)

Fe 2+ (ppm)

Groundwater Sampling Record

Time	Elapsed	Flow Rate	Temp (C°)	Spc Cond	pH	ORP	DO	DTW/Notes
1618			8.23	213.4	6.20	-147	0.01	

Date: 2/22/01
Well: Bkgrnd
Location: Ft Lewis
Weather: Foggy, 30s
Sampled by: LAN
Initial DTW: not available
DHA Pump on: 0754
DHA Start Time: 0812
BS Pump on: 0754
BS Start Time: 0800

N_2 Pressure: 1350
Cal Factor: 27.583
Trace Analyzer Standard [C]: 10.2 ppm
Response (mV):
Time: /
Flow Rate: 400 mL/min
Sensor = 10.2 Step 3 start 0814
Flow Rate: 400 mL/min

CDM
Camp Dresser & McKee Inc.

Gallons waste water
3+3+4
10 total

H_2 and CO Sampling Record

Method/Sample	Time	Elapsed	DHA Step	Inj. Time	H_2 ppm	CO	BS Inj Time	H_2 ppm	CO
DHA	0824	10	3		.2566				
~~BS~~	~~0815~~	~~15~~							
BS	0824	24			~~.12~~			.1324	
DHA	0834	~~24~~ 20	3		.3331				
BS	0835	35						.1308	
DHA	0846	32	3		.1085				
BS	0846	46						.3562	
DHA	0855	41	3		.1923				
BS	0857	57						.1010	

This is what Steve got yesterday

Same as

Notes GLE bubble increased in size

DHA Result: DHA shut itself off in Step 5

BS DH: 0.0808

GLE DH: 0.15384

DHA/BS %Diff:

DHA/GLE %Diff:

Sulfide (ppm)

Fe 2+ (ppm)

Groundwater Sampling Record

Time	Elapsed	Flow Rate	Temp (C°)	Spc Cond	pH	ORP	DO	DTW/Notes
0758	4	400 mL	9.00	106.4	6.61	68	11.72	
0803	9		9.03	106.2	6.64	72	11.70	
0809	15	400 mL	9.37	106.0	6.70	77	9.96	
0817	~~23~~		9.50	104.9	6.68	79	10.22	
0836			9.36	105.7	6.67	82	10.29	

Date: 2/22/01 N_2 Pressure: 1300

Well: Bkgrnd Well Cal Factor:

Location: Trace Analyzer Standard [C]:

Weather: Response (mV):

Sampled by: LAN

Initial DTW: Not avail. Time: –

DHA Pump on: 0914 Flow Rate: 400 mL/min

DHA Start Time: Step 3 0916 Sensor = 22

BS Pump on: 0914 Flow Rate: 400 mL/min

BS Start Time: 0916

CDM

Camp Dresser & McKee Inc.

Run 2

Gals. of wastewater
4+4+3+3+1
14 total

H_2 and CO Sampling Record

Method/Sample	Time	Elapsed	DHA Step	Inj. Time	H_2 ppm	CO	BS Inj Time	H_2	CO
DHA	0926	10	3		.2009				
BS	0926	10					.439.4351		
DHA	0936	20	3		LOST		.		
BS	0936	20					LOST		
(2) DHA	0946	30	3		.1464				
(2) BS	0946	30					.1961		
(1) DHA	0956	40	3		.2025				
(1) BS	0956	40					.1283		

DHA Result: .0379 nM

BS DH: 0.1026

GLE DH: 0.1620

DHA/BS %Diff: -63.06%

DHA/GLE %Diff: -76.6%

Sulfide (ppm)

Fe 2+ (ppm)

Groundwater Sampling Record

Time	Elapsed	Flow Rate	Temp (C°)	Spc Cond	pH	ORP	DO	DTW/Notes
0923	8	400mL	9.54	105.5	6.70	81	10.37	

Date: 2/22/01 | N_2 Pressure: 1206

Well: D2 2D | Cal Factor:

Location: Ft Lewis | Trace Analyzer Standard [C]: 10.2 ppm

Weather: 40s, foggy | Response (mV):

Sampled by: LAN

Initial DTW: ~~0.01~~ | Time: —

DHA Pump on: ~~1040~~ ~~1043~~ | Flow Rate: 400 mL/min

DHA Start Time: ~~1214~~ 1202 1228

BS Pump on: ~~1040~~ ~~1043~~ | Flow Rate: 400 mL/min

BS Start Time: 1214 1202

CDM

Camp Dresser & McKee Inc.

Gallons wastewater

4+3+3+4+2+4 = 20

H_2 and CO Sampling Record

Method/Sample	Time	Elapsed	DHA Step	Inj. Time	H_{2ppm}	CO	BS Inj Time	H_{2ppm}	CO
BS	1226	12						.9570	
DHA	1238	10	3		.8799				
BS	1238	24						1.0409	
DHA	1248	20	3		.9711				
BS	1258	44						1.1008	
~~DHA~~	~~1258~~	~~30~~	~~3~~	pump shut off due to low power					
* Restart DHA @ flow = 350 mL/min									
DHA	1316	10	3		.6698	equilibrated here			
DHA	1326	20	3		.7423				
	1337	31	3		.7540				

* Had to restart DHA because flow was accidentally reversed. MGC and some of molecular sieve was wet, cannister dry

DHA Result: 14646 nM

BS DH: 0.8806

GLE DH: 0.6032

DHA/BS %Diff: 66.39%

DHA/GLE %Diff: 142.89%

Sulfide (ppm) .001 (Steve Cox)

Fe 2+ (ppm) < .01 (Steve)

Groundwater Sampling Record

Time	Elapsed	Flow Rate	Temp (C°)	Spc Cond	pH	ORP	DO	DTW/Notes
restart 1054	11	400mL	9.73	214.0	6.47	56	9.36	effervescence — stopped to check for leaks. After clamping, stuff have set. eff
1207	5	400mL	9.82	275.5	6.40	76	4.56	
1220	18		9.75	283.5	6.40	70	4.92	
1234	32		9.82	293.4	6.43	67	3.99	
1255			9.82	298.1	6.44	61	4.27	

Date: 2/22/01
Well: SP10
Location: Ft Lewis
Weather: 40s, cloudy
Sampled by: LAN/PJE
Initial DTW: not measurable
DHA Pump on: 1452
DHA Start Time: sensor
BS Pump on: 1452
BS Start Time: 1455

N_2 Pressure: 1000
Cal Factor:
Trace Analyzer Standard [C]:
Response (mV):
Time: /
Flow Rate: 400 mL/min
11.3/14:55
Flow Rate: 400 mL/min

CDM
Camp Dresser & McKee Inc.

Gallons waste
4+4+6
= 14

H_2 and CO Sampling Record

Method/Sample	Time	Elapsed	DHA Step	Inj. Time	H_2 ppm	CO	BS Inj Time	H_2 ppm	CO
DHA	1505	10	3		.3547				
BS	1505	10						.3214	
DHA	1515	20	3		.2434				
BS	1515	20						.4856	
DHA	1525	30	3		.2716				
BS	1525	30						.2639	
DHA	1535	40			.2360				
BS	1535	40	(4-just ad 4. switched to 5th step)					.2136	
Rerun DHA									
DHA	1617	10	3		.3348				
DHA	1627	20	3		.2382				

DHA Result: .0189 nM Run1 Run2 0.1578 nM
BS DH: .17088 nM 0.1709
GLE DH: .1888 nM 0.1906
DHA/BS %Diff: -7.65%
DHA/GLE %Diff: -17.2%

Sulfide (ppm)

Fe 2+ (ppm) <.01 ppm

Groundwater Sampling Record

Time	Elapsed	Flow Rate	Temp (C°)	Spc Cond	pH	ORP	DO	DTW/Notes
1457	5	400 mL	9.56	94.3	6.7	56	6.91	turbid
1502	10	–	9.57	94.3	6.75	61	6.78	
1507	15		9.59	94.7	6.68	67	7.02	water clearing, slight tint brown
1517	25	–	9.57	95.1	6.71	73	6.91	
1523	30		9.59	95.0	6.41	76	6.38	
1533	41		9.59	95.1	6.72	79	6.71	

Date: 2/22/01
Well: SP7
Location: Ft Lewis
Weather: 40s partly cldy
Sampled by: LAN/PJE
Initial DTW: —
DHA Pump on: 1642
DHA Start Time: 1653
BS Pump on: 1642
BS Start Time: 1653

N_2 Pressure: 950
Cal Factor:
Trace Analyzer Standard [C]:
Response (mV):
Time: —
Flow Rate: 300 mL
Flow Rate: 400 mL

CDM
Camp Dresser & McKee

H_2 and CO Sampling Record

Method/Sample	Time	Elapsed	DHA Step	Inj. Time	H_2 ppm	CO	BS Inj Time	H_2 ppm	CO
DHA (1)	1703	10	3		.4720				
BS (1)	1703	10						.4099	
DHA	1713	20	3		.4555				
BS	1713	20						.3613	

DHA Result: 0.3030
BS DH: 0.2890
GLE DH: 0.3644
DHA/BS %Diff: 4.849o
DHA/GLE %Diff: − 16.85

Sulfide (ppm) could not conduct

Fe 2+ (ppm) 0.00 mg/L

Groundwater Sampling Record

Time	Elapsed	Flow Rate	Temp (C°)	Spc Cond	pH	ORP	DO	DTW/Notes
1647	5	400 mL	9.15	149.5	6.5	87	1.74	
1651	9		9.11	149.1	6.43	88	1.54	
1657	~~10~~ 15		9.09	148.9	6.44	89	1.57	
~~1700~~ 1705	23		9.06	148.9	6.45	89	1.70	
~~1700~~ 1710			9.04	149.2	6.43	89	1.57	

Date: 2/23/01
Well: PZ 1B
Location: Ft. Lewis
Weather: 40, Clouds
Sampled by: LAN/PJE
Initial DTW: not available
DHA Pump on: 1500
DHA Start Time: 1506
BS Pump on: 1500
BS Start Time: 1506

N_2 Pressure: 300 mL
Cal Factor:
Trace Analyzer Standard [C]: 10.2 ppm
Response (mV):
Time: –
Flow Rate: 400 mL
Flow Rate: 400 mL

Run 1

3+4

CDM ✓
Camp Dresser & McKee Inc.

H_2 and CO Sampling Record

Method/Sample	Time	Elapsed	DHA Step	Inj. Time	H_2	CO	BS Inj Time	H_2 ppm	CO
BS	1516	10						32.2391	
BS	1526	20						38.1469	
BS	1536	30						29.5360	
BS	1545	39 @						6.2608	

DHA Result: ~~[illegible]~~ 200.6 nM

Check cal gas, 10.155 ppm
Run DHA again, result = 143.7 nM after 10 minutes

Sulfide (ppm) .195 mg/L

BS DH: 23.63

GLE DH:

DHA/BS %Diff: 748.99%

Fe 2+ (ppm) 5.8 ~~ppm~~ mg/L

DHA/GLE %Diff:

Groundwater Sampling Record

Time	Elapsed	Flow Rate	Temp (C°)	Spc Cond	pH	ORP	DO	DTW/Notes
1506	6	400 mL	10.83	806.1	5.85	-54	0.05	Strong odor, slight eff. slight tint
1516	16		10.75	800.8	5.83	-52	0.00	
1527	27		10.73	800.4	5.80	-52	0.00	

Date: 2/23/01 N_2 Pressure: 450

Well: ST7 Cal Factor:

Location: Ft. Lewis Trace Analyzer Standard [C]:

Weather: 40 cloudy Response (mV):

Sampled by: LANIPSE

Initial DTW: unavailable Time: —

DHA Pump on: ~~1440~~ 1340 Flow Rate: 400

DHA Start Time: ~~1445~~ 1345

BS Pump on: ~~1440~~ 1340 Flow Rate: 400

BS Start Time: ~~1445~~ 1345

CDM

Camp Dresser & McKee Inc.

7 + 3

H_2 and CO Sampling Record

Method/Sample	Time	Elapsed	DHA Step	Inj. Time	H_2	CO	BS Inj Time	H_2 ppm	CO
BS	1355	10						.5164	
BS	1405	20						.3902	
BS	1415	30						.4795	

DHA Result: 0.5211 nM

BS DH: 0.3836

GLE DH:

DHA/BS %Diff: 35.859%

DHA/GLE %Diff:

Sulfide (ppm) .003 mg/L

Fe 2+ (ppm) .04 mg/L

Groundwater Sampling Record

Time	Elapsed	Flow Rate	Temp (C°)	Spc Cond	pH	ORP	DO	DTW/Notes
~~1442~~ 1342	2	400	10.2	111.7	6.45	-19	2.27	odor, color, turbid, TCE
1350	10		10.19	101.4	6.50	-1	1.46	contaminated
1403	23		10.21	101.4	6.46	6	1.90	
1411	30		10.20	101.1	6.50	10	1.93	

Date: 2/23/01 | N_2 Pressure: 6.00

Well: ST9 | Cal Factor:

Location: Ft Lewis | Trace Analyzer Standard [C]:

Weather: | Response (mV):

Sampled by:

Initial DTW: | Time:

DHA Pump on: 1055 | Flow Rate: ~~400 mL/m~~ 370 mL/m

DHA Start Time:

BS Pump on: 1055 | Flow Rate: 400/m

BS Start Time:

CDM

Camp Dresser & McKee Inc.

buckets ~~gallons~~ wastewater

2 + 4

had to reduce flow, too much eff. was causing GLE to foam up

H_2 and CO Sampling Record

Method/Sample	Time	Elapsed	DHA Step	Inj. Time	H_2 ppm	CO	BS Inj Time	H_2 ppm	CO
DHA		10			26.5816				
BS		10						Lost sample	
DHA		20			9.3733				
BS		20						34.8183	
BS		30						78.867	(diluted
BS		40						51.497	(diluted
Found leak in sampling port on DHA. Fix leak. Check valves - no leaks									
Ran DHA for 5 min on Step 3, during Step 5 voltage went up 1.7V in ~10 seconds. Reprogrammed initial delay time from 10s to 1s									
Run for 2.5 minutes on Step 3 before advancing to Step 4. (GLE filling w/ foam)									
	DHA = 31.4379		installed cartridge upside down						

repeat 31.4379

Tubing depth ~~37~~ 36'

DHA Result: 1.287

BS DH: 41.20

GLE DH:

DHA/BS %Diff: -23.69

DHA/GLE %Diff:

Sampling port/syringe on DHA: vacuum is being created, may be pulling in air when sample is taken after needle is removed from T

Sulfide (ppm) .074 ppm

Fe 2+ (ppm) 12.4 ppm

Groundwater Sampling Record

Time	Elapsed	Flow Rate	Temp (C°)	Spc Cond	pH	ORP	DO	DTW/Notes
1059	4	400	10.77	548.3	5.55	-23	0.12	effervescense, ~~SH~~
1105			10.89	851.8	5.51	-38	0.02	slightly turbid
1113			10.94	851.8	5.53	-48	0.00	strong odor
1125			10.99	851.3	5.50	-52	0.00	tint - brown

Date: 2/23/01
Well: MW9
Location: Ft Lewis
Weather: 40s
Sampled by: LAN
Initial DTW: Not available
DHA Pump on: 0954
DHA Start Time: 1000
BS Pump on: 0954
BS Start Time: 1000

N_2 Pressure: 6000 psi
Cal Factor:
Trace Analyzer Standard [C]:
Response (mV):
Time:
Flow Rate: 400
Flow Rate: 400

CDM
Camp Dresser & McKee Inc.

Gallons wastewater
6

H_2 and CO Sampling Record

Method/Sample	Time	Elapsed	DHA Step	Inj. Time	H_2 ppm	CO	BS Inj Time	H_2 ppm	CO
DHA	1010	10	3		1.9629				
BS	1010	10					~~2.2792~~	2.2792	
DHA	1020	20	3		1.3073				
BS	1020	20						3.6279	

DHA Result: 1.3267

2/22/01 Steve Cox got (from bubble strip) 4.9800 ppm @ 30 mins, 5.4250 ppm @ 40 mins

Bottom of Tubing @ 76'

Sulfide (ppm) assume ∅

BS DH: 2.9023

GLE DH:

DHA/BS %Diff: -54%

DHA/GLE %Diff:

Fe 2+ (ppm) .01 mg/L
.01 mg/L
Total Fe (unfiltered) 2 ppm

Groundwater Sampling Record

Time	Elapsed	Flow Rate	Temp (C°)	Spc Cond	pH	ORP	DO	DTW/Notes
0958	4	400	9.74	926.4	6.55	38	0.38	turbid
1015	21		9.89	920.1	6.54	25	0.00	clearing

Date: 2/23/07

Well: ST3

Location: Ft Lewis

Weather: 30s, partly cldy

Sampled by: LAN/RSE

Initial DTW: ~~not~~ not aval

DHA Pump on: 0840

DHA Start Time: 0853

BS Pump on: 0840

BS Start Time: 0853

N_2 Pressure: 700

Cal Factor: 22.886

Trace Analyzer Standard [C]:

Response (mV):

Time:

Flow Rate: 400 mL/m

Flow Rate: 400 mL/m

CDM

Camp Dresser & McKee Inc.

Gallons wastewater

9

H_2 and CO Sampling Record

Method/Sample	Time	Elapsed	DHA Step	Inj. Time	H_2 ppm	CO	BS Inj Time	H_2 ppm	CO
DHA	0903 ~~10~~	10	3	0.3983	~~39.83~~				
BS	0903 ~~14~~	10						0.1864	
DHA	0913 ~~20~~	20	3		0.5447				
BS	0913 ~~29~~	20						0.1762	

DHA Result: 0.2059 NM

BS DH: 0.1410

GLE DH: 0.4358

DHA/BS %Diff: 46.03

DHA/GLE %Diff:

After pumping DTW 24.9' bgs (?) Depth of 13.6 for bottom of tube

Sulfide (ppm)

Fe 2+ (ppm) ~~assume Ø since aerobic~~

Groundwater Sampling Record

Time	Elapsed	Flow Rate	Temp (C°)	Spc Cond	pH	ORP	DO	DTW/Notes
0842	2	400mL	8.67	96.9	6.42	171	10.67	
0845			8.83	97.2	6.48	172	9.31	
0853			9.03	97.6	6.47	172	9.88	
0905			8.97	97.0	6.52	168	9.37	

CDM Camp Dresser & McKee Inc.

FIELD INVESTIGATION DAILY REPORT

Sheet 1 of

Project Pensacola NAS ESTCP
Project No.
Location Pensacola NAS WWTP
Date 5/1/02
Equipment Rental
Company
To
Equipment Hours
F.E. Time from:
to:
By

Arrive on site w/ PJE/MMT/Frank Chapelle
at 7:30AM -
Frank calibrated Trace
MMT calibrated Hydrolab
PJE calibrated DHA
Baseline = 52.3mV
Std = 10.3ppm
STP/T Calibration at 8:00AM. (Sensor O2 #1
Step 5 did not advance (version 8.5E)
repeat calib at 8:20AM + manually
Advance step 5 after 3min.
CF = 1701

Start well PCI-1 @ 8:44AM.
Frank stopped BS @ 8:46AM because of leak
Frank restarted @ 8:52AM
STP 3 only 20min - will run all runs today @ 20min -
Repeat PCI-1 @ 9:24AM

Note: All runs with 1tsp mole sieve,
1tsp carulite
slightly < 1tsp GAC
remainder MGC
in large catalyst cartridge.
used small IV

10:10 - go to well USGS-5
~~checked flow - was only 300 increased to 400~~

Visitors:
Attachments ☐ Continued
Distribution Initial

rev 9/00 forms\field\field investigation daily report p65

CDM Camp Dresser & McKee Inc.

FIELD INVESTIGATION DAILY REPORT

Sheet 2 of _____

Project _____ Project No. _____
Location _____ Date _____
Equipment Rental _____ Company _____ To _____
Equipment Hours _____ F.E. Time from: _____ to: _____ By _____

Soil sample USGS-5
sample depth 4-6 ft BGC
wet sand (white) sat'd.
homogenized - did not need sieving.
USGS5 soil sample is 19 feet south
of well USGS5 ~~sat~~

Soil sample USGS6 31 ft south east of well
4-6' BGS sat'd USGS6

11:45 go to well 33 G101

checked flow, was only 300ml/min —
increase to 500

Bor PNAS1 4-6 ft BGS sat'd
is 53 ft NW of USGS6

~~Set~~ set up at USGS 15 @ 1315,
middle well.

Bor USGS 2 4 ft east of well
USGS2 4-6 ft BGS.
did 2 depths 1-2 ft (above water
table - Brown sand)
+ 4-6 ft - saturated.

Visitors:
Attachments ☐ Continued
Distribution Initial

rev 5/00 forms\field\field investigation daily report.p65

CDM Camp Dresser & McKee Inc.

FIELD INVESTIGATION DAILY REPORT

Sheet 3 of ____

Project ____ Project No. ____
Location ____ Date ____
Equipment Rental ____ Company ____ To ____
Equipment Hours ____ F.E. Time from: ____ to: ____ By ____

USGS2 - possible sheen (slight)
USGS2 Run 3 - water is being sucked up a little from GLE. Due to inadvertently starting pump after DHA + the having to restart.

moved to USGS1 @ 1500 (middle).
collected soil sample 21 ft south of well USGS1
collected soil 4-6 ft BGS.

1500 ran calibration
initial Baseline = 59 mV.

Collected soil sample ~20 ft south of 33G08, 0-1 ft BGS - ~~[illegible]~~ out hills - red sand, dry.

calib t	mV				
0	65.2	90	2197	180	3292
10	252.5	100	2381		
20	500	110	2522		
30	780	120	2688	CF = 3209	
40	1046	130	2804		
50	1327	140	2929		
Visitors: 60	1591	150	3028		
Attachments 70	1821	160	3125	☐ Continued	
Distribution 80	2013	170	3209	Initial	

rev 9/00 forms\field\field investigation daily report p65

change to Figaro sensor CO2 #3

CDM Camp Dresser & McKee Inc.

FIELD INVESTIGATION DAILY REPORT

Sheet 4 of ____

Project ____ Project No. ____
Location ____ Date 5/2/02
Equipment Rental ____ Company ____ To ____
Equipment Hours ____ F.E. Time from: ____ to: ____ By ____

5/2/02
Arrived on site at 7:40AM
Set up at SMW8 well

0800 start calib sensor #03.
Baseline = 153.8mV

Missed 3min stop @ end of step 5.
repeat calib @ 815
Baseline = 236mV

CF = 3310mV
during SMW8 sampling water still being sucked up slightly.
0830 collected soil sample SMW-8
4-6 ft BGS 6" East of
well SMW-8
white sand.

Moved to RW8 0935
cleaned GLE w/ Alconox prior to running
solved water suck up problem.
1100 - moved to IMW 69

lost calib (DHA became unplugged)
Recalib - baseline 87.5 CF 2407

Moved to USGS4 @ 12:20

Run 2 - forgot to turn water on - ~~recalib~~ locked up when advanced.

Visitors: baseline 351.9mV
Attachments CF = 3847 ☐ Continued
Distribution Run 3, offsite. Initial

rev 9/00 forms/field/field investigation daily report p85

CDM Camp Dresser & McKee Inc.

FIELD INVESTIGATION DAILY REPORT

Sheet 5 of _____

Project _____ Project No. _____
Location _____ Date _____
Equipment Rental _____ Company _____ To _____
Equipment Hours _____ F.E. Time from: _____ to: _____ By _____

DHA summary.

well	Run	Result	Recalc. result	Comment.
PC1-1	1	0.046		sensor 2
	2	0.6727		
USGS-5	1	1.9164		
	2	1.6358		
33G101	1	18.6466		
	2	19.6726		
USGS 2	1	18.6418		sheen
	2	5.8026		
	3	11.4406		water in DHA
USGS 1	1	20.597	22.66	high to
	2	4.6266	22.58	high to
33G08	1	19.9968		high sulfide
	2	16.9189		high sulfide
SMW8	1	9.9779		sensor 3
	2	9.9182		
RW5	1	3.7703		
	2	2.0120		
IMW69	1	2.7258		Recalibrated prior.
	2	2.6095		
USGS-4	1	14.4373		
	2	5.4973		Recalibrated prior
	3	4.0572		

Visitors:

Attachments ☐ Continued

Distribution Initial

Date: 5/1/02

Well: PCI-1

Location: Run 1

Weather: Pensacola NAS cloudy, warm

Sampled by:

Initial DTW: 9.9'

DHA Pump on: 8:44

DHA Start Time: 8:44

BS Pump on: ~~8:44~~ 8:52

BS Start Time: ~~8:44~~ 8:52

N_2 Pressure: 1250

Cal Factor: 1701

Trace Analyzer Standard [C]: 10.3 ppm

Response (mV): 59.6 mV

Time:

Flow Rate: 500

Flow Rate: 500

CDM

Camp Dresser & McKee Inc.

GLE equilibration time 20 min.

H_2 and CO Sampling Record

Method/Sample #	Time (sec)	~~Elapsed~~ mV	DHA Step	~~Inj. Time~~ (sec)	~~H_2~~ (mV)	CO	BS Inj Time	H_2	CO
	0	80.7		160	190.5				
	10	87.5		170	198.8				
	20	96.3		180	203.4				
	30	102.8							
	40	108.9							
	50	116.0							
	60	124.5							
	70	130.8							
	80	136.9							
	90	144.2							
	100	152.2							
	110	156.6							
	120	165.2							
	130	172.1							
	140	178.1							
	150	185.5							

DHA Result: 0.6146 nM

Sulfide (ppm) 0.0

BS DH:

GLE DH:

DHA/BS %Diff:

Fe 2+ (ppm) 0.0

DHA/GLE %Diff:

Groundwater Sampling Record

Time	Elapsed	Flow Rate	Temp (C°)	Spc Cond	pH	ORP	DO	DTW/Notes
0844			25.12	2.93	7.20	38	10.49	
847			23.54	2.93	7.16	32	8.83	
855			24.23	2.90	7.18	24	0.44	
859			25.37	2.85	7.19	13	0.32	
906			25.67	2.90	7.20	9	0.19	took samples

Date: 5/1/02

Well: PCI-1 RUN 2

Location: PNAS

Weather:

Sampled by: PJE

Initial DTW:

DHA Pump on: 9:24

DHA Start Time: 9:24

BS Pump on: 9:24

BS Start Time: 9:24

N_2 Pressure: 1250

Cal Factor: 1701

Trace Analyzer Standard [C]: 10.3

Response (mV): 37.1 Baseline

Time:

Flow Rate: 500

Flow Rate: 500

CDM

Camp Dresser & McKee Inc.

H_2 and CO Sampling Record

Method/Sample #	Time (sec)	~~Elapsed~~ (mV)	DHA Step	~~Inj Time~~ sec	~~H_2~~ mV	CO	BS Inj Time	H_2	CO
	0	67.6		160	190.5				
	10	74.9		170	197.6				
	20	85.1		180	209.2				
	30	90.7							
	40	97.5							
	50	106.1							
	60	114.4							
	70	121.7							
	80	128.5							
	90	136.9							
	100	144.2							
	110	151.5							
	120	159.4							
	130	168.0							
	140	175.3							
	150	182.7							

DHA Result: 0.6727

Sulfide (ppm)

BS DH:

GLE DH:

DHA/BS %Diff:

Fe 2+ (ppm)

DHA/GLE %Diff:

Groundwater Sampling Record

Time	Elapsed	Flow Rate	Temp (C°)	Spc Cond	pH	ORP	DO	DTW/Notes
0929			24.81	2.90	7.19	3	0.61	
0935			25.20	2.88	7.19	0	0.47	
0947			24.91	3.041	7.15	-109	0.21	

Date: 5/1/02

Well: USGS-5

Location: RW-1 PNAS

Weather:

Sampled by: P Fe.

Initial DTW: 6.6'

DHA Pump on: 10:17

DHA Start Time: 10:17

BS Pump on: 10:15

BS Start Time: 10:15

N_2 Pressure: 1225

Cal Factor: 1701

Trace Analyzer Standard [C]: 10.3

Response (mV): 28.6mV

Time:

Flow Rate: ~~500~~ 300

Flow Rate: 500

CDM

Camp Dresser & McKee Inc.

H_2 and CO Sampling Record

Method/Sample #	Time	Elapsed	DHA Step	Inj. Time	H_2	CO	BS Inj Time	H_2	CO
	0	52.3		160	406				
	10	77.2		170	427				
	20	98.0		180	449.5				
	30	118.8							
	40	136.9							
	50	159.4							
	60	182.7							
	70	203.4							
	80	227.8							
	90	249.7							
	100	271.8							
	110	293.5							
	120	318.4							
	130	337.4							
	140	362.6							
	150	382.7							

DHA Result: 1.9164

Sulfide (ppm)

BS DH:

GLE DH:

DHA/BS %Diff:

Fe 2+ (ppm)

DHA/GLE %Diff:

Groundwater Sampling Record

Time	Elapsed	Flow Rate	Temp (C°)	Spc Cond	pH	ORP	DO	DTW/Notes
1020			24.81	2.21	3.10	299	1.96	
1023			24.99	2.01	3.08	300	2.01	
10 40			25.38	10.64	3.09	296	0.41	
10:50			26.19	10.50	3.12	297	0.18	

Date: 5/1/02 | N_2 Pressure: 1200

Well: USGS 5 Run 2 | Cal Factor: 1701

Location: PENSACOLA NAS | Trace Analyzer Standard [C]:

Weather: | Response (mV): (Baseline) 44.0 mv

Sampled by:

Initial DTW: 6.6 | Time:

DHA Pump on: 10:59 | Flow Rate: ~~300~~ 300

DHA Start Time: 11:03

BS Pump on: 10:55 | Flow Rate: 500

BS Start Time: 10:55

CDM
Camp Dresser & McKee Inc.

H_2 and CO Sampling Record

Method/Sample #	Time	Elapsed	DHA Step	Inj. Time	H_2	CO	BS Inj Time	H_2	CO
	0	57.9		160	354.3				
	10	77.7		170	379				
	20	92.4		180	396				
	30	108.9							
	40	123.4							
	50	142.6							
	60	156.6							
	70	175.3							
	80	193.2							
	90	210.7							
	100	231.4							
	110	249.7							
	120	270.0							
	130	290.7							
	140	310.5							
	150	332.9							

DHA Result: 1.6358 nm

Sulfide (ppm) 0.00

BS DH:

GLE DH:

DHA/BS %Diff:

DHA/GLE %Diff:

Fe 2+ (ppm) 0e
1:5 0e
1:10 0e
1:25
1:100 7.7 ppm

Groundwater Sampling Record

Time	Elapsed	Flow Rate	Temp (C°)	Spc Cond	pH	ORP	DO	DTW/Notes
~~11:02~~								
11:04			27.25	10.48	3.13	294	0.27	
11:10			26.35	10.54	3.10	292	0.84	
11:17			26.40	10.50	3.11	291	0.47	
11:23			26.23	10.51	3.09	289	0.27	

Date: 5/1/02 | N_2 Pressure: 1200

Well: 33G10 (2nd) | Cal Factor: 1701

Location: PNAS | Trace Analyzer Standard [C]: 10.3ppm

Weather: | Response (mV): 28.6

Sampled by:

Initial DTW: 6.1 ft. | Time:

DHA Pump on: 1155 | Flow Rate: 500

DHA Start Time: 1155

BS Pump on: | Flow Rate: 500

BS Start Time:

CDM

Camp Dresser & McKee Inc.

H_2 and CO Sampling Record

Method/Sample #	Time (sec)	Elapsed (mV)	DHA Step	Inj. Time (sec)	H_2 (mV)	CO	BS Inj Time	H_2	CO
	0	45		160	3802				
	10	355		170	3869				
	20	764		180	3913				
	30	1187							
	40	1579							
	50	2002							
	60	2310							
	70	2605							
	80	2827							
	90	3028							
	100	3197							
	110	3332							
	120	3461							
	130	3565							
	140	3649							
	150	3733							

DHA Result: 18 6466nm

Sulfide (ppm) 0.85 ppm

BS DH:

GLE DH:

DHA/BS %Diff:

Fe 2+ (ppm) 1:50 5.6ppm (0.5mL (2) 25)

DHA/GLE %Diff:

Groundwater Sampling Record

Time	Elapsed	Flow Rate	Temp (C°)	Spc Cond	pH	ORP	DO	DTW/Notes
0957			25.91	3.12	3.46	125	0.8	
1201			25.74	3.13	3.46	112	1.11	
12:08			25.82	3.673	3.42	84	0.79	
12:13			26.26	7.285	3.17	152	0.53	
12:16			25.72	7.676	3.15	137	0.50	
12:19			25.46	7.763	3.14	151	0.52	

Date: 5/1/02 N_2 Pressure: 1150

Well: 33 G 101 Cal Factor: 1701

Location: PNAS Run2 Trace Analyzer Standard [C]: 10.3 ppm

Weather: Response (mV): 62.4 mV

Sampled by:

Initial DTW: Time:

DHA Pump on: ~~10~~ 1232 Flow Rate: 500

DHA Start Time: 1232

BS Pump on: ~~1227~~ 1234 Flow Rate: 500

BS Start Time: ~~1227~~ 1234

CDM

Camp Dresser & McKee Inc.

H_2 and CO Sampling Record

Method/Sample #	Time	~~Elapsed~~ mV	DHA Step	Inj. Time	~~H_2~~ mV	CO	BS Inj Time	H_2	CO
	0	80.7		160	4110				
	10	500		170	4153				
	20	1046		180	4181				
	30	1591							
	40	2058							
	50	2466							
	60	3844							
	70	3096							
	80	3308							
	90	3477							
	100	3633							
	110	3756							
	120	3846							
	130	3929							
	140	3997							
	150	4054							

DHA Result: 19.6726 Sulfide (ppm)

BS DH:

GLE DH:

DHA/BS %Diff: Fe 2+ (ppm)

DHA/GLE %Diff:

Groundwater Sampling Record

Time	Elapsed	Flow Rate	Temp (C°)	Spc Cond	pH	ORP	DO	DTW/Notes
1234			27.09	7.69	3.17	165	0.40	
1241			25.81	7.70	3.14	146	1.49	
12:54			26.0	7.849	3.13	141	0.78	

Date: 5/1/02

Well: USGS-2

Location: PNAS

Weather: Rain

Sampled by:

Initial DTW: 3.9'

DHA Pump on: 1321

DHA Start Time: 1323

BS Pump on: 1323

BS Start Time: 1323

N_2 Pressure: 1150

Cal Factor: 1701

Trace Analyzer Standard [C]: 10.3

Response (mV): 40.7

Time:

Flow Rate: 500

Flow Rate: 500

CDM

Camp Dresser & McKee Inc.

H_2 and CO Sampling Record

Method/Sample #	Time	~~Elapsed~~ mV	DHA Step	Inj. Time	~~H_2~~ mV	CO	BS Inj Time	H_2	CO
	0	62.0		160	3705				
	10	~~202~~ 202.9		170	3818				
	20	388		180	3913				
	30	635							
	40	922							
	50	1230							
	60	1522							
	70	1849							
	80	2125							
	90	2393							
	100	2664							
	110	2889							
	120	3084							
	130	3280							
	140	3433							
	150	3577							

DHA Result: 18.6418

Sulfide (ppm)

BS DH:

GLE DH:

DHA/BS %Diff:

Fe 2+ (ppm)

DHA/GLE %Diff:

Groundwater Sampling Record

Time	Elapsed	Flow Rate	Temp (C°)	Spc Cond	pH	ORP	DO	DTW/Notes
1323			30.19	4.928	6.40	-45	0.47	
1328			28.76	7.25	7.04	-184	0.24	
1338			27.68	7.344	7.15	-194	0.76	

Date: 7/1/02 | N_2 Pressure: 1100

Well: USG52 | Cal Factor: 1701

Location: RWR2 | Trace Analyzer Standard [C]: 10.3

Weather: | Response (mV):

Sampled by:

Initial DTW: | Time:

DHA Pump on: 1356 | Flow Rate: 500

DHA Start Time: 1356

BS Pump on: 1357 | Flow Rate: 500

BS Start Time: 1357

CDM

Camp Dresser & McKee Inc.

H_2 and CO Sampling Record

Method/Sample #	Time (sec)	~~Elapsed~~ (mV)	DHA Step	~~Inj. Time~~ (sec)	~~H_2~~ (mV)	CO	BS Inj Time	H_2	CO
	0	83.1		160	1131				
	10	121.7		170	1202				
	20	162.4		180	1282				
	30	210.7							
	40	266.0							
	50	323.0							
	60	388.0							
	70	456.7							
	80	523							
	90	595							
	100	668							
	110	748							
	120	820							
	130	894							
	140	978							
	150	1057							

DHA Result: 5.8026 | Sulfide (ppm)

BS DH:

GLE DH:

DHA/BS %Diff: | Fe 2+ (ppm)

DHA/GLE %Diff:

Groundwater Sampling Record

Time	Elapsed	Flow Rate	Temp (C°)	Spc Cond	pH	ORP	DO	DTW/Notes
1357			27.72	7.37	7.17	-178	0.16	
1404			26.72	7.398	7.17	-188	0.13	
1412			26.40	7.446	7.21	-195	0.13	

CDM

Camp Dresser & McKee Inc.

Date: 5/1/02

Well: U5GS2 run 3

Location: PNAS

Weather:

Sampled by:

Initial DTW:

DHA Pump on: 1430

DHA Start Time: 1430

BS Pump on: 1427

BS Start Time: 1427

N_2 Pressure: 1050

Cal Factor: 1701

Trace Analyzer Standard [C]: 10.3

Response (mV): 67.6

Time:

Flow Rate: 500

Flow Rate: 500

H_2 and CO Sampling Record

Method/Sample #	Time	~~Elapsed~~ mV	DHA Step	Inj. Time	~~H_2~~ mV	CO	BS Inj Time	H_2	CO
	0	90.7		160	2260				
	10	168.7		170	2353				
	20	254.9		180	2466				
	30	357.0							
	40	475.3							
	50	595							
	60	736							
	70	894							
	80	1034							
	90	1202							
	100	1371							
	110	1522							
	120	1679							
	130	1823							
	140	1973							
	150	2140							

DHA Result: 11.4406

Sulfide (ppm) 0.06

BS DH:

GLE DH:

DHA/BS %Diff:

DHA/GLE %Diff:

Fe 2+ (ppm)

25 x 0.6ppm

Groundwater Sampling Record

Time	Elapsed	Flow Rate	Temp (C°)	Spc Cond	pH	ORP	DO	DTW/Notes
1431			29.07	7.550	7.20	-169	0.25	
1438			26.50	7.406	7.23	-182	0.13	
1452			27.72	7.239	7.25	-192	0.12	
1458			27.78	7.252	7.26	-194	0.11	

Date: USGS 1
Well: Run 1
Location: 5/1/02
Weather: PNAS
Sampled by: Run 1
Initial DTW:
DHA Pump on: 1510
DHA Start Time: 1510
BS Pump on: 1510
BS Start Time: 1510

N_2 Pressure: 1000
Cal Factor: 1701
Trace Analyzer Standard [C]: 10.3
Response (mV): 77.2
Time:
Flow Rate: 500
Flow Rate: 500

CDM
Camp Dresser & McKee Inc.

H_2 and CO Sampling Record

Method/Sample #	Time	Elapsed	DHA Step	Inj. Time	H_2	CO	BS Inj Time	H_2	CO
	50	4773							
	60	4800							
	70	4828							
	80	4840							
	90	4856							
	100	4868							
	110	4868							
	120	4884							
	130	4884							
	140	4896							
	150	4896							
	160	4896							
	170	4896							
	180	4896							

DHA Result: 20.597 nM

Sulfide (ppm)

BS DH: Alternate calc (To account for 1 sec delay for to data)

GLE DH: $= \frac{4896 - 77.2}{1701}(8) = 22.66$

DHA/BS %Diff:

Fe 2+ (ppm)

DHA/GLE %Diff:

Groundwater Sampling Record

Time	Elapsed	Flow Rate	Temp (C°)	Spc Cond	pH	ORP	DO	DTW/Notes
1513			25.84	7.251	3.53	150	0.43	
1518			25.73	7.284	3.54	137	0.31	

Date: 5/1/02
Well: USG51
Location: Run 2 PNAS
Weather:
Sampled by:
Initial DTW: NA
DHA Pump on: 1545
DHA Start Time: 1548
BS Pump on: 1549
BS Start Time: 1549

N_2 Pressure: 1000
Cal Factor: 1071
Trace Analyzer Standard [C]: 10.3
Response (mV): 108.9
Time:
Flow Rate: 500
Flow Rate: 500

CDM
Camp Dresser & McKee Inc.

H_2 and CO Sampling Record

Method/Sample #	Time	~~Elapsed~~ mV	DHA Step	~~Inj.~~ Time	~~H_2~~ mV	CO	BS Inj Time	H_2	CO
	0	123.4		160	4925				
	10	4856		170	4925				
	20	4913		180	4925				
	30	4925		~~190~~					
	40	4925							
	50	4936							
	60	4936							
	70	4936							
	80	4936							
	90	4936							
	100	4936							
	110	—							
	120	4936							
	130	4925							
	140	4925							
	150	4925							

DHA Result: 4.6266 uM.

Sulfide (ppm) 0.95 ppm

BS DH: based on manual calc (To account for 1 sec delay for to data)

GLE DH: $= \frac{4925 - 123.4}{1701}(8) = 22.58$

DHA/BS %Diff:

Fe 2+ (ppm) 1.5 or 8.3 @ 22x

DHA/GLE %Diff:

Groundwater Sampling Record

Time	Elapsed	Flow Rate	Temp (C°)	Spc Cond	pH	ORP	DO	DTW/Notes
1549			25.62	7.212	3.55	112	0.30	
1555			25.56	7.196	3.54	108	0.45	
1600			25.45	7.203	3.55	106	0.35	
1608			25.36	7.181	3.55	103	0.27	4.6 ft at end

Date: 5/1/02 N_2 Pressure: 950

Well: 35G08QVN Cal Factor: 1701

Location: PNAS 1 Trace Analyzer Standard [C]: 10.3

Weather: Response (mV): 270

Sampled by:

Initial DTW: ~5.9 Time:

DHA Pump on: 1635 Flow Rate: 500

DHA Start Time: 1635

BS Pump on: 1635 Flow Rate: 500

BS Start Time: 1635

CDM

Camp Dresser & McKee Inc.

H_2 and CO Sampling Record

Method/Sample #	Time	~~Elapsed~~ ml	DHA Step	~~Inj.~~ Time	~~H_2 mV~~	CO	BS Inj Time	H_2	CO
	0	188							
	10	2742	160	4812					
	20	3617	170	4824					
	30	4009	180	4828					
	40	4250							
	50	4406							
	60	4532							
	70	4576							
	80	4632							
	90	4672							
	100	4701							
	110	4729							
	120	4752							
	130	4773							
	140	4785							
	150	4800							

DHA Result: 19.9968

Sulfide (ppm)

BS DH:

GLE DH:

DHA/BS %Diff:

Fe 2+ (ppm)

DHA/GLE %Diff:

Groundwater Sampling Record

Time	Elapsed	Flow Rate	Temp (C°)	Spc Cond	pH	ORP	DO	DTW/Notes
1637			28.36	3.053	6.85	-290	0.30	
1651			26.80	3.142	6.76	-339	0.40	
1656			26.61	3.170	6.76	-344	0.38	

Date: 5/1/02

Well: 33608

Location: Run 2

Weather: PNAS

Sampled by:

Initial DTW:

DHA Pump on: 1712

DHA Start Time: 1712

BS Pump on: 1710

BS Start Time: 1710

N_2 Pressure: 900

Cal Factor: 1701

Trace Analyzer Standard [C]: 10.3

Response (mV): ~~[illegible]~~ 111.6

Time:

Flow Rate: 500

Flow Rate: 500

CDM

Camp Dresser & McKee Inc.

H_2 and CO Sampling Record

Method/Sample #	Time	~~Elapsed~~ ml	DHA Step	~~Inj.~~ Time	~~H_2~~ ml	CO	BS Inj Time	H_2	CO
	0	157							
	10	1011		160	3593				
	20	1018		170	3649				
	30	1371		180	3717				
	40	1707							
	50	2018							
	60	2270							
	70	2494							
	80	2704							
	90	2873							
	100	3000							
	110	3141							
	120	3252							
	130	3349							
	140	3433							
	150	3517							

DHA Result: 16.9189 mM

BS DH:

GLE DH:

DHA/BS %Diff:

DHA/GLE %Diff:

Sulfide (ppm) 0.314 absorbance 1:25

Fe 2+ (ppm) 0 ppm

Groundwater Sampling Record

Time	Elapsed	Flow Rate	Temp (C°)	Spc Cond	pH	ORP	DO	DTW/Notes
1712			27.64	3.277	6.81	-335	0.53	
1720			26.32	3.163	6.78	-347	0.40	
1730			25.65	3.229	6.79	-349	0.38	
1735			25.34	3.238	6.81	-351	0.36	

Date: 5/2/02

Well: SMW8 Run 1

Location: PNAS

Weather:

Sampled by:

Initial DTW: 5.02

DHA Pump on: 0830

DHA Start Time: 0830

BS Pump on: 0830

BS Start Time: 0830

N_2 Pressure: 1350

Cal Factor: 3310

Trace Analyzer Standard [C]: 10.3

Response (mV): 170.5

Time:

Flow Rate: 500

Flow Rate: 500

CDM

Camp Dresser & McKee Inc.

H_2 and CO Sampling Record

Method/Sample #	Time	~~Elapsed~~ mV	DHA Step	Inj. Time	~~H_2~~ mV	CO	BS Inj Time	H_2	CO
	0	350		160	4221				
	10	906		170	4266				
	20	1494		180	4306				
	30	2030							
	40	2478							
	50	2832							
	60	3141							
	70	3365							
	80	3565							
	90	3705							
	100	3818							
	110	3925							
	120	3997							
	130	4070							
	140	4125							
	150	4181							

DHA Result: 9.9779

Sulfide (ppm)

BS DH:

GLE DH:

DHA/BS %Diff:

Fe 2+ (ppm)

DHA/GLE %Diff:

Groundwater Sampling Record

Time	Elapsed	Flow Rate	Temp (C°)	Spc Cond	pH	ORP	DO	DTW/Notes
0830			24.86	0.2836	7.10	-133	0.50	
0835			23.97	0.2896	7.02	-140	0.31	
0843			24.10	0.2967	7.08	-145	0.22	

Date: 5/2/02

Well: SMW8 Run 2

Location: PNAS

Weather:

Sampled by:

Initial DTW: 0903

DHA Pump on: ~~0903~~

DHA Start Time: 0903

BS Pump on: ~~0900~~ 0903

BS Start Time: ~~0900~~ 0905

N_2 Pressure: 1350

Cal Factor: 3310

Trace Analyzer Standard [C]: 10.3

Response (mV): 147

Time:

Flow Rate: 500

Flow Rate: 500

CDM

Camp Dresser & McKee Inc.

H_2 and CO Sampling Record

Method/Sample #	Time	~~Elapsed~~ mV	DHA Step	Inj. Time	~~H_2~~ mV	CO	BS Inj Time	H_2	CO
	0	215.8		160	4181				
	10	680		170	4221				
	20	1242		180	4262				
	30	1793							
	40	2270							
	50	2664							
	60	2985							
	70	3236							
	80	3433							
	90	3605							
	100	3745							
	110	3846							
	120	3941							
	130	4014							
	140	4093							
	150	4125							

DHA Result: 9.9182

Sulfide (ppm) 0.15

BS DH:

GLE DH:

DHA/BS %Diff:

Fe 2+ (ppm) 1.6

DHA/GLE %Diff:

Groundwater Sampling Record

Time	Elapsed	Flow Rate	Temp (C°)	Spc Cond	pH	ORP	DO	DTW/Notes
0912			24.65	0.3009	7.08	-150	0.19	
0923			24.81	0.3180	7.15	-154	0.14	

Date: 5/2/02

Well: RW5

Location: RW 1

Weather:

Sampled by:

Initial DTW: 4.10'

DHA Pump on: 0945

DHA Start Time: 0945

BS Pump on: 0945

BS Start Time: 0945

N_2 Pressure: 1350

Cal Factor: 3310

Trace Analyzer Standard [C]: 10.3

Response (mV): 118.8

Time:

Flow Rate: 500

Flow Rate: 500

CDM

Camp Dresser & McKee Inc.

H_2 and CO Sampling Record

Method/Sample #	Time	~~Elapsed~~ mf	DHA Step	~~Inj.~~ Time	~~H_2~~ m ✓	CO	BS Inj Time	H_2	CO
	0	195.6		~~150~~	1				
	10	264		160	1579				
	20	344		170	1651				
	30	436		180	1719				
	40	512							
	50	611							
	60	725							
	70	808							
	80	906							
	90	1006							
	100	1091							
	110	1187							
	120	1270							
	130	1355							
	140	1426							
	150	1510							

DHA Result: 3.7703

BS DH:

GLE DH:

DHA/BS %Diff:

DHA/GLE %Diff:

Sulfide (ppm)

Fe 2+ (ppm)

Groundwater Sampling Record

Time	Elapsed	Flow Rate	Temp (C°)	Spc Cond	pH	ORP	DO	DTW/Notes
0947			25.59	0.4580	7.37	-246	0.42	
0951			24.94	0.4447	7.47	-281	0.26	

Date: 5/2/02

Well: RW5 Run 2

Location:

Weather:

Sampled by:

Initial DTW:

DHA Pump on: 1019

DHA Start Time: 1019

BS Pump on: 1019

BS Start Time: 1019

N_2 Pressure: 1350

Cal Factor: 3310

Trace Analyzer Standard [C]: 10.3

Response (mV): 114.4

Time:

Flow Rate: 500

Flow Rate: 500

CDM

Camp Dresser & McKee Inc.

H_2 and CO Sampling Record

Method/Sample #	Time	~~Elapsed~~ mV	DHA Step	Inj. Time	~~H_2~~ mV	CO	BS Inj Time	H_2	CO
	0	198.8		160	934				
	10	239.9		170	974				
	20	282.2		180	1006				
	30	331.7							
	40	378.9							
	50	429.9							
	60	476.6							
	70	523.0							
	80	567							
	90	623							
	100	668							
	110	708							
	120	764							
	130	808							
	140	848							
	150	894							

DHA Result: 2.012

Sulfide (ppm) 2.8

BS DH:

GLE DH:

DHA/BS %Diff:

Fe 2+ (ppm) 4.8

DHA/GLE %Diff:

Groundwater Sampling Record

Time	Elapsed	Flow Rate	Temp (C°)	Spc Cond	pH	ORP	DO	DTW/Notes
1020			25.27	0.4472	7.35	-321	0.11	
1033			25.03	0.4592	7.35	-330	0.06	

Date: 5/2/02
Well: IMW 69
Location: Run 1
Weather: PWAS
Sampled by:
Initial DTW: 6.8
DHA Pump on: 1113
DHA Start Time: 1113
BS Pump on: 1113
BS Start Time: 1113

N_2 Pressure: 1300
Cal Factor: 2407
Trace Analyzer Standard [C]: 10.3
Response (mV): 157.1

Time:
Flow Rate: 500
Flow Rate: 500

CDM
Camp Dresser & McKee Inc.

H_2 and CO Sampling Record

Method/Sample #	Time	~~Elapsed~~ mV	~~DHA Step~~	Inj. Time	~~H_2~~ mV	CO	BS Inj Time	H_2	CO
	0	162.4		160	894				
	10	200.0		170	922				
	20	252		180	962				
	30	297							
	40	337.4							
	50	385.4							
	60	436.0							
	70	488.1							
	80	527							
	90	583							
	100	623							
	110	680							
	120	720							
	130	764							
	140	808							
	150	848							

DHA Result: 2.7258

Sulfide (ppm)

BS DH:

GLE DH:

DHA/BS %Diff:

Fe 2+ (ppm)

DHA/GLE %Diff:

Groundwater Sampling Record

Time	Elapsed	Flow Rate	Temp (C°)	Spc Cond	pH	ORP	DO	DTW/Notes
1118			24.79	3.744	7.95	-339	0.19	
1139			25.18	3.722	7.74	-377	0.09	

Date: 5/2/02
Well: IMW 69
Location: Run 2 PA/AS
Weather:
Sampled by:
Initial DTW:
DHA Pump on: 1146
DHA Start Time: 1146
BS Pump on: 1146
BS Start Time: 1146.

N_2 Pressure: 1300
Cal Factor: 2407
Trace Analyzer Standard [C]:
Response (mV): 136.9
Time:
Flow Rate: 500
Flow Rate: 500

CDM
Camp Dresser & McKee Inc.

H_2 and CO Sampling Record

Method/Sample #	Time	~~Elapsed~~ mV	DHA Step	Inj. Time	~~H_2~~ mV	CO	BS Inj Time	H_2	CO
	0	156.6		160	848				
	10	190.5		170	878				
	20	231.2		180	922				
	30	271.8							
	40	318.4							
	50	362.6							
	60	408.3							
	70	456.4							
	80	500							
	90	539							
	100	583							
	110	635							
	120	680							
	130	724							
	140	764							
	150	808							

DHA Result: 2.6095

Sulfide (ppm) 10.5 PPM

BS DH:

GLE DH:

DHA/BS %Diff:

Fe 2+ (ppm) 0

DHA/GLE %Diff:

Groundwater Sampling Record

Time	Elapsed	Flow Rate	Temp (C°)	Spc Cond	pH	ORP	DO	DTW/Notes
1158			25.67	3.642	7.74	-381	6.07	

Date: 5/2/02

Well: USG54 Run 1

Location: INAS

Weather:

Sampled by:

Initial DTW: 4.57

DHA Pump on: 1230

DHA Start Time: 1230

BS Pump on: 1230

BS Start Time: 1230

N_2 Pressure: 1250

Cal Factor: 2407

Trace Analyzer Standard [C]: 10.3

Response (mV): 55.1

Time:

Flow Rate: 500

Flow Rate: 500

CDM

Camp Dresser & McKee Inc.

H_2 and CO Sampling Record

Method/Sample #	Time	~~Elapsed~~ mV	DHA Step	Inj. Time	~~H_2~~ mV	CO	BS Inj Time	H_2	CO
	0	103.3		160	3981				
	10	438.3		170	4026				
	20	890		180	4074				
	30	1426							
	40	1899							
	50	2310							
	60	2646							
	70	2901							
	80	3125							
	90	3320							
	100	3461							
	110	3593							
	120	3689							
	130	3773							
	140	3858							
	150	3925							

DHA Result: 13.4373

Sulfide (ppm)

BS DH:

GLE DH:

DHA/BS %Diff:

Fe 2+ (ppm)

DHA/GLE %Diff:

Groundwater Sampling Record

Time	Elapsed	Flow Rate	Temp (C°)	Spc Cond	pH	ORP	DO	DTW/Notes
1232			29.25	4.324	8.25	-279	0.34	
1242			31.56	4.208	8.15	-279	0.09	

Date: 5/2/02

Well: USGS-4

Location: Run 2

Weather: PNAS

Sampled by:

Initial DTW: 1326

DHA Pump on: ~~1303~~

DHA Start Time: ~~1303~~ 1326

BS Pump on: ~~1303~~ 1326

BS Start Time: ~~1303~~ 1326

N_2 Pressure: 1250

Cal Factor: ~~2467~~ 3847

Trace Analyzer Standard [C]: 10.3

Response (mV): ~~150.9~~ 142.6

Time:

Flow Rate: 500

Flow Rate: 500

CDM

Camp Dresser & McKee Inc.

H_2 and CO Sampling Record

Method/Sample #	Time	~~Elapsed~~ mV	DHA Step	Inj. Time	~~H_2~~ mV	CO	BS Inj Time	H_2	CO
	0	162.4		160	2601				
	10	295.1		170	2676				
	20	455.6		180	2748				
	30	652							
	40	866							
	50	1062							
	60	1270							
	70	1466							
	80	1635							
	90	1805							
	100	1956							
	110	2086							
	120	2214							
	130	2325							
	140	2421							
	150	2522							

DHA Result: 5.4973

BS DH:

GLE DH:

DHA/BS %Diff:

DHA/GLE %Diff:

Sulfide (ppm) 0 ppm

Fe 2+ (ppm) 1 ppm

Groundwater Sampling Record

Time	Elapsed	Flow Rate	Temp (C°)	Spc Cond	pH	ORP	DO	DTW/Notes
1304			31.42	4.420	8.17	-275	0.12	
1327			28.69	4.481	8.14	-282	0.07	
1345			27.00	4.463	8.15	-284	0.06	

Date: 5/2/02

Well: USGS 4 Rvr 3

Location: PNAS

Weather:

Sampled by:

Initial DTW:

DHA Pump on: 1411

DHA Start Time: 14:11

BS Pump on: 14:11

BS Start Time: 14:11

N_2 Pressure: 1200

Cal Factor: 3847

Trace Analyzer Standard [C]: 10.3

Response (mV): 80.7 64mV

Time:

Flow Rate: 500

Flow Rate: 500

CDM

Camp Dresser & McKee Inc.

H_2 and CO Sampling Record

Method/Sample #	Time	~~Elapsed~~ AV	DHA Step	Inj. Time	~~H_2~~ AV	CO	BS Inj Time	H_2	CO
	0	121.7		160	1905				
	10	207.9		170	1961				
	20	318.1		180	2030				
	30	434.8							
	40	579							
	50	708							
	60	836							
	70	978							
	80	1119							
	90	1230							
	100	1366							
	110	1466							
	120	1567							
	130	1663							
	140	1747							
	150	1821							

DHA Result: 4.0572

Sulfide (ppm)

BS DH:

GLE DH:

DHA/BS %Diff:

Fe 2+ (ppm)

DHA/GLE %Diff:

Groundwater Sampling Record

Time	Elapsed	Flow Rate	Temp (C°)	Spc Cond	pH	ORP	DO	DTW/Notes
14:11			26.11	4.483	8.14	-282	0.07	
14:12			26.01	4.477	8.12	-283	0.07	

Appendix C
Quality Assurance Project Plan (QAPP)

C-1 Purpose and Scope of the Plan

The data from the analyses should be of such known quality that informed decisions can be made and results are considered reliable. The quality-assurance (QA) program is designed under the PARCC scenario (i.e., precision, accuracy, representativeness, completeness, and comparability) of quality assurance/quality control.

C-2 Quality Assurance Responsibilities

The process of data reduction, review, and reporting is applicable to all aspects of the project and is required for technical and managerial data. Documented verification of these data is crucial. Consistent, documented data reduction techniques for hand calculations and computer analyses and standardized technical data validation are equally important in the verification of the technical data.

To ensure that all aspects of the demonstration remain in conformance with ESTCP-approved data quality objectives, we have defined specific project roles and responsibilities as shown in the organization chart (Figure 1) and summarized below.

Project Management – Carmen Lebron of the Naval Facilities Engineering Service Center (NFESC) will serve in a project management capacity. As such, she will be responsible for establishing site contacts, coordinating site access, and assisting in review and implementation of the Technology Demonstration Plan.

Laboratory Director – Dr. Patrick J. Evans, who serves as the Laboratory Director at CDM in Bellevue, Washington, will oversee all aspects of data management. He will be responsible for establishing QA/QC policies and ensuring those policies are followed. He will also be responsible for reviewing QA/QC results to verify if data are acceptable for use or if an analytical batch or sequence needs to be reanalyzed.

Specific responsibilities of the Laboratory Director include:

- Ensuring that the necessary staff and resources to produce quality results in a timely manner are committed to the project.

- Ensuring that the staff are adequately trained in the procedures so that they are capable of producing high quality results and detecting situations that are not within the method or project QA limits.

- Ensuring that the analytical methods and procedures are followed and well documented.

- Maintaining the laboratory's Quality Assurance Manual and documenting that its procedures are followed.

- Ensuring that laboratory reports are complete and reported in the required deliverable format.

- Communicating, managing, and documenting all corrections initiated at the laboratory.

Validation and Characterization – Dr. Frank Chapelle will evaluate results of the DH analyzer by comparing them with the bubble-strip method. Dr. Chapelle is with the U.S. Geological Survey in South Carolina.

Analysts – The Laboratory Director will be supported by one analyst who will be responsible for maintaining a laboratory notebook and updating the standard preparation, and instrument calibration/maintenance notebooks.

Specific responsibilities of the analysts include:

- Ensuring that appropriate testing, measurement, and record keeping procedures are followed.

- Ensuring the proper use of standard operating procedures associated with data collection and equipment operation.

- Ensuring that the proper number and type of QC samples are analyzed.

- Informing the Laboratory Director when problems occur, and communicating and documenting any corrective actions that are taken.

C-3 Data Quality Parameters

C.3.1 Representativeness

Representativeness is a measure of how closely measured results reflect the actual concentration or distribution of chemical compounds in a sampled media. The number, location, and frequency of samples, sampling techniques, and sample custody and shipment are developed at the start of the project to ensure that data are representative of site conditions.

C.3.2 Completeness

Completeness is a measure of the amount of valid data obtained from the requested analytical method. Completeness may be defined as the number of samples with acceptable chemical analyses compared to the total number of samples collected in the field. The target completeness objective will be 95 percent.

C.3.3 Comparability

Data comparability expresses the confidence with which each sampling event can be compared to another. Comparability will be maintained by use of consistent sampling procedures, EPA-approved analytical methods, consistent detection limits, and consistent units.

C.3.3.1 Accuracy

Accuracy is assessed by determining how close a measured value lies to its actual value. One approach is to spike a sample with an analyte of known concentration and calculate the average percent recovery (%R). A second procedure is to analyze a standard and calculate the percent difference (%D) between the measured value and the statistically determined value of the standard.

Two types of percent recoveries generally are measured for organic analyses: matrix spike and surrogate spike. For a matrix spike, analytes with a known concentration are added to the sample. A matrix spike will be conducted for the bioavailable ferric iron assay. This will involve addition of a known concentration of a specific iron oxide to the bioavailable ferric iron assay tubes either with or without soil. The assay will be run and bioavailable ferric iron assay results will be compared to expected results in order to calculate percent recovery. Initially, an iron oxide standard with a predetermined concentration will be tested using the bioavailable ferric iron assay without soil. Subsequently, this standard will be spiked into one soil sample per site and the bioavailable ferric iron assay will be run. The surrogate spike is not applicable for DH and bioavailable ferric iron assays.

C.3.3.2 Precision

Precision is a measure of the reproducibility of an analytical result (i.e., to obtain the same or similar results on replicate measurements of the same sample or of duplicate samples). Reproducibility is affected by matrix variations, the extraction procedure, and the analytical method used. For duplicate and replicate samples, precision is expressed as the relative percent difference (RPD). For each site, a duplicate soil sample will be analyzed by the bioavailable ferric iron assay and the analyses listed in Table 2.

C.4 Calibration Procedures, Quality Control Checks, and Corrective Action

C.4.1 Standard Preparation

New standards are prepared at the beginning of each project. New standards are based on the chemical nature of the constituents. Standards that are used for analysis will be traceable to a nationally recognized source (e.g., NIST).

All stock standard solutions are entered into the standard preparation logbook immediately after preparation. The standard preparation logbook identifies the following for each stock standard: preparation date, preparer's initials, chemical constituents, solvent, volume, and disposal date (completed when standard is destroyed).

C.4.2 Instrument Calibration

Analytical instruments are calibrated at the beginning of each project or when calibration verification results indicate that instrument recalibration is required. Instrument calibration QC parameters are specified in the analytical methods, but generally three-point calibration curves are generated with a correlation coefficient [r] requirement of >0.95 and/or with a percent relative standard deviation (%RSD) of the calibration standard response factors of 30 percent.

C.4.2.1 Calibration Verification

The instrument calibration average response factor is verified at the beginning and end of each analytical sequence (of no more than 20 samples) or within a 12-hour window. Calibration verification QC parameters are specified in the analytical methods, but generally a %D criterion of 25 percent is used. The %D value is derived by assessing the difference between the average response factor from the initial calibration and the response factor from a mid-range calibration verification standard.

C.4.3 Method Blanks

Method blanks are analyzed per sample preparation batch (of no more than 20 samples). Method blanks are used to determine the cleanliness of the analytical system. If method blanks are shown to contain reportable concentrations of an analyte, the associated sample batch containing concentrations up to five times the level in the associated blank will be reanalyzed.

C.4.4 Surrogate Spikes

Surrogate spike compounds are added to each sample before the preparation steps of the analysis begin. Surrogate spike compound percent recovery values are evaluated against laboratory and method requirements. Surrogate spikes are not applicable as described above.

C.4.5 Duplicate Sample Analyses

One sample is selected for duplicate analysis per sample batch. The sample and the duplicate are taken from the same sample container and carried through the sample preparation and analysis steps as discrete samples. Performance of the duplicate sample analysis is evaluated against laboratory and method RPD criteria.

C.4.6 Laboratory Control Samples

A laboratory control sample/laboratory control sample duplicate (LCS/LCSD) is analyzed per analytical batch. The LCS/LCSD samples are prepared by adding the target analyte spiking solutions to clean silica sand (soil analyses) or distilled water (groundwater analyses) and carrying the spiked samples through the preparation and analysis steps. Performance of the LCS/LCSD analyses is evaluated against laboratory and method %R and RPD criteria. For the bioavailable ferric iron assay evaluation, samples of clean silica sand spikes with known quantities of various iron oxide standards will be submitted for analysis. These samples will be blind standards.

C.4.7 Matrix Spike Samples

A matrix spike/matrix spike duplicate (MS/MSD) is analyzed per analytical batch. The MS/MSD samples are prepared by adding the target analyte spiking solutions to an aliquot of a field sample and carrying the spiked samples through the preparation and analysis steps. Performance of the MS/MSD analyses is evaluated against laboratory and method %R and RPD criteria.

C.5 Corrective Actions

In the event that data quality falls outside of established acceptance criteria, correction involves the following steps:

1. Discovery of a non-conformance.
2. Identification of the responsible party.
3. Plan and schedule of corrections.
4. Confirmation that the desired results were produced.

The intent of the quality assurance process is to minimize corrections through the development and implementation of effective internal controls. To accomplish this, procedures will be implemented, as described in this section, to activate a correction for each measurement system when acceptance criteria have been exceeded. In addition, reviews and audits will be conducted on a periodic basis to check this implementation. Results of quality assurance reviews and audits typically identify the requirements for corrections. When this occurs, a correction plan will be prepared to include: identification of the correction, organizational level of responsibility for the action taken, steps to be taken for correction, and approval for the correction.

Procedures for ensuring the correctness of the data reduction process are discussed in this section. Data are reduced either manually on calculation sheets or by computer on formatted printouts. Responsibilities for the data reduction process are delegated as follows:

- Technical personnel will document and review their own work and are responsible for the correctness of the work.

- Major calculations will receive a method and calculation check by a secondary reviewer prior to reporting (peer review).

- The Laboratory Director will be responsible for ensuring that data reduction is performed according to protocols discussed in this QA Plan.

The need for correction(s) in the analytical laboratory may come from several sources: equipment malfunction, failure of internal QA/QC checks, method blank contamination, failure of performance or system audits, and/or noncompliance with QA requirements. When measurement equipment or analytical methods fail QA/QC checks, the problem will immediately be brought to the attention of Laboratory Director and the analysts in accordance with laboratory and method protocols. If failure is due to equipment malfunction, the equipment will be repaired, precision and accuracy will be reassessed, and the analysis will be rerun. Attempts will be made

to reanalyze all affected parts of the analysis so that, in the end, the product is not affected by failure of QA requirements. All incidents of QA failure and the correction tasks will be documented in the instrument logbook and in the associated project notebook. Corrections also will be taken promptly for deficiencies noted during spot checks of raw data. As soon as sufficient time has elapsed for corrections to be implemented, evidence of correction of deficiencies will be presented to the Laboratory Director.

C.6 Demonstration Procedures

The DH analyzer will be inspected in CDM's laboratory in Bellevue, Washington prior to shipment to each site. Inspection of mechanical and electrical systems will be conducted to ensure reliable operation. Test runs will be conducted in the laboratory to assure acceptable operation. Upon arrival at each site, the DH analyzer will once again be inspected to determine if damage occurred during shipment. A calibration run will be conducted to further ensure proper operation. During operation at each site, the DH analyzer will be calibrated at least once daily and variations in the calibration factor will be noted. If unacceptable variation is observed, associated problems will be identified and corrected. Mechanical or electrical failure while on site will be addressed upon discovery through repair and/or replacement of malfunctioning parts.

C.7 Calculation of Data Quality Indicators

Technical validation requires comparison of QC and instrument performance standard results to the required control limits. The following QC elements will be reviewed (as appropriate):

- Analytical holding times
- Blank contamination
- Instrument calibration
- Continuing calibration standards
- Internal standards
- Analytical accuracy (matrix spike compound recoveries, laboratory control sample spike compound recoveries, surrogate compound recoveries)
- Analytical precision (comparison of duplicate sample results and duplicate spike results, expressed as RPD)
- Compound identification
- Compound quantitation and reported detection limits

Any outliers from laboratory or method QC criteria for the above-mentioned parameters will be qualified through an in-house data validation process. Results will be flagged with the

appropriate data qualifier and the effect on data usability. The following data flags are used by the laboratory (Source: National Functional Guidelines for Organic Data Review, USEPA 2/94):

U The analyte was analyzed for, but was not detected at concentrations greater than the sample reporting limit.

J The analyte was positively identified; the associated numerical value is the approximate concentration of the analyte in the sample.

UJ The analytes were not detected at concentrations greater than the sample reporting limit. However, the sample reporting limit is approximate and may or may not represent the actual limit of quantitation necessary to accurately and precisely measure the analyte in the sample.

The data qualifier "R" (data are rejected) is not used. Any situation requiring rejection of data will require corrective action and reanalysis with acceptable results.

C.8 Performance and System Audit

Data quality audits will be performed on each data set for comparison to instrumental and laboratory QC parameters. If the data quality audit indicates a significant laboratory problem, then performance audits of the laboratory will be conducted to identify and correct specific problems.

C.9 Quality Assurance Reports

All data will be reviewed for quality assurance. This will include checking for appropriate holding times, preservation, chains-of-custody, and field and laboratory quality control samples.

Appendix D
Health and Safety Plan (HASP)

Prepared For:
Environmental Security Technology Certification Program

Project Health and Safety Plan

DEVELOPMENT OF A DISSOLVED HYDROGEN ANALYZER AND A BIOAVAILABLE FERRIC IRON ASSAY

July 26, 2001

CDM
11811 N.E. 1st Street, Suite 201
Bellevue, Washington 98005
425/453-8383

CDM Project No. 4000-31212

TABLE OF CONTENTS

1.0 INTRODUCTION 67
1.1 GENERAL 67
1.2 CONTACT PERSONNEL 67
1.3 PROJECT RESPONSIBILITIES 67
1.4 SITE LOCATION AND DESCRIPTION 69
1.4.1 FORT LEWIS, WASHINGTON 69
1.4.2 NAVAL SUBMARINE BASE BANGOR, WASHINGTON 69
1.4.3 LAUREL BAY EXCHANGE, BEAUFORT, SOUTH CAROLINA 69
1.4.4 DOVER AIR FORCE BASE, DELAWARE 69
1.4.5 NAVAL AIR STATION PENSACOLA, FLORIDA 70
2.0 SCOPE OF WORK 71
3.0 CHEMICAL HAZARD ASSESSMENT 72
3.1 CHLORINATED SOLVENTS 72
3.2 PETROLEUM PRODUCTS 73
4.0 PHYSICAL HAZARD ASSESSMENT 75
4.1 TEMPERATURE-RELATED HAZARDS 75
4.2 FIRE AND EXPLOSION HAZARDS 75
4.3 NOISE HAZARDS 75
4.4 OXYGEN DEFICIENCY HAZARDS 75
4.5 UTILITY HAZARDS 75
4.6 CONSTRUCTION HAZARDS 76
5.0 SITE WORK ZONES 77
5.1 EXCLUSION ZONE 77
5.2 CONTAMINATION REDUCTION ZONE 77
5.3 SUPPORT ZONE 77
6.0 AIR MONITORING AND SAMPLING 78
6.1 AIR MONITORING 78
6.2 AIR SAMPLING 78
7.0 PERSONNEL PROTECTION 80
7.1 EXCLUSION ZONES AND CONTAMINATION REDUCTION ZONES 80
7.2 SUPPORT ZONES 80
7.3 SUMMARY 80
8.0 DECONTAMINATION PROCEDURES 82
8.1 PERSONNEL 82
8.2 SAMPLING EQUIPMENT 82
8.3 HEAVY EQUIPMENT 82
9.0 GENERAL SAFE WORK PRACTICES 83
10.0 EMERGENCY PROCEDURES 84
10.1 PHYSICAL INJURIES 84
10.2 CHEMICAL EXPOSURES 84
10.2.1 EYE EXPOSURES 84
10.2.2 SKIN EXPOSURES 84

10.2.3 INHALATION 84
10.2.4 INGESTION 85
10.3 FIRES 85
10.4 UNCONTROLLED RELEASE OF HAZARDOUS MATERIALS 85
10.5 EMERGENCY NOTIFICATION SYSTEM 85
10.6 EMERGENCY SERVICES 85
10.6.1 HOSPITAL ROUTE 86
10.6.2 EMERGENCY TELEPHONE NUMBERS 86
11.0 TRAINING 87
12.0 MEDICAL SURVEILLANCE 88
13.0 HASP MODIFICATIONS 89

FIGURES

Figure 1 Fort Lewis Hospital Route Map
Figure 2 SUBASE Bangor Hospital Route Map
Figure 3 Laurel Bay Hospital Route Map
Figure 4 Dover AFB Hospital Route Map
Figure 5 NAS Pensacola Hospital Route Map

ATTACHMENTS

Attachment A: Subcontractor Safety Agreement Form
Attachment B: Field Team Review Form
Attachment C: Supplementary Record of Occupational Injuries and Illnesses Form

1.0 INTRODUCTION

The purpose of this project is to demonstrate and validate two innovative analytical tools that can measure dissolved hydrogen (DH) and bioavailable ferrous iron. The efficiency of these two tools will be assessed at six Department of Defense sites (Fort Lewis and SUBASE Bangor in Washington; Laurel Bay in Beaufort, South Carolina; Dover Air Force Base in Delaware; and Naval Air Station Pensacola in Florida). The sixth site (Cape Canaveral in Florida or Moody Air Force Base in Georgia) will be selected at a later date.

1.1 GENERAL

This project Health and Safety Plan (HASP) provides guidance and procedures to Camp Dresser & McKee Inc. (CDM) personnel involved in field activities at the five sites listed in Section 1.4. This HASP applies to CDM personnel working within the scope of work outlined in Section 2.0.

If, during the course of work, information is obtained indicating additional hazards or a change in scope, field work will be temporarily halted, information regarding potential hazards reevaluated, and this HASP updated or modified as necessary. Project work will resume after field personnel are notified of modifications to the HASP.

1.2 CONTACT PERSONNEL

CDM Project/Field Manager	Dr. Patrick Evans	(425) 453-8383
CDM Health and Safety Manager	Monica Beckman	(425) 453-8383
CDM Occupational Physician	Dr. Calvin Jones	(425) 822-3651

1.3 PROJECT RESPONSIBILITIES

The CDM Health and Safety Manager (HSM) and CDM Project Manager (PM) are responsible for ensuring this HASP is implemented during project operations. The CDM Field Manager will act as the designated Site Safety Officer (SSO) and is responsible for day-to-day safety requirements during fieldwork. CDM personnel are responsible for following the procedures set forth in this HASP. When no policies or regulations apply, CDM employees should act in a manner to reduce potential risk of injury or health effects. Project-related safety responsibilities include the following:

Project Manager:

- Ensure subcontractors have submitted a completed Subcontractor Safety Agreement Form, included as Attachment A.
- Ensure site personnel and visitors comply with the requirements of the project HASP.
- Ensure site personnel meet the required qualifications.

Health and Safety Manager:

- Write and amend the project HASP.
- Investigate accidents, injuries, and illnesses.
- Conduct specialized and site-specific training as required.
- Address questions raised by the PM, SSO, or site personnel.

Site Safety Officer:

- Ensure site personnel comply with the requirements of the HASP and have submitted a completed Field Team Review Form (included as Attachment B) to the HSM.
- Monitor the site and work areas for health and safety hazards and address any unusual situations; consult the HSM if necessary.
- Investigate accidents, injuries, and illnesses; contact the HSM.

Oversee the proper use, maintenance, and care of safety equipment and ensure proper decontamination procedures are followed.

- Conduct regular site safety meetings.
- Stop work if necessary (i.e., an imminent danger or health hazard exists) and contact the HSM.

Site Personnel:

- Read and follow the HASP.
- Report accidents, illnesses, or unsafe conditions to the SSO or HSM.
- Properly clean and maintain safety equipment.

Prior to working at the site, each employee will receive a copy of this HASP from the PM or HSM. Employees are required to read the HASP and forward a completed copy of the Field Team Review Form to the HSM. Employees are expected to conduct site work in a safe manner and comply with this HASP and federal, state, and local regulations.

CDM may hire subcontractors to assist with field operations at the site. Subcontractors should follow the CDM project HASP or provide and implement their own project HASP. Subcontractor personnel should follow their company's HASP and conduct site work in a safe

manner. If a subcontractor is hired, an individual authorized to commit the company will read the CDM HASP and forward a completed copy of the Subcontractor Safety Agreement Form to the PM. Work performed on the site by subcontractors may include utilizing a Geoprobe to collect soil samples and decontaminating equipment.

1.4 SITE LOCATION AND DESCRIPTION

Five Department of Defense sites have been designated for field work. An additional site will be selected at a later date.

1.4.1 Fort Lewis, Washington

Fort Lewis Logistics Center is located in Washington State between the cities of Tacoma and Olympia. The source area for this study is the East Gate Disposal Yard (EGDY), which is in the northwest corner of the base. Originally the s EGDY was used for storage and disposal of various solid and liquid wastes, from the Fort Lewis Logistic Center. Studies have been conducted at the EGDY since 1982 to verify and delineate contamination. Affected media include soil and groundwater, with the prominent contaminant being trichloroethene. Additional information is available in Battelle Technology Demonstration Plan (2000).

1.4.2 Naval Submarine Base Bangor, Washington (SUBASE Bangor)

The source area for this study is Operable Unit (OU) 8, which is located in the Public Works Industrial Area (PWIA) of the base. SUBASE Bangor is located near the town of Silverdale, Washington. A UST located onsite is believed to be the source of a release of unleaded gasoline into the surrounding media for years spanning 1982 to 1986. In 1986, remediation efforts were undertaken to clean up the site of the release (soil vapor extraction/air sparging and product recovery). To date, liquid petroleum hydrocarbons remain in several monitoring wells at the PWIA. Chlorinated VOCs are also present in groundwater. Additional information is available in EA's Final Technical Memorandum (2000).

1.4.3 Laurel Bay Exchange, Beaufort, South Carolina

Laurel Bay is situated on Port Royal Island in the Sea Islands of the Atlantic Coastal Plain, near Beaufort, South Carolina. Contamination onsite was first discovered in March/April of 1993. Soil and groundwater had concentrations of contaminants above maximum contaminant levels (MCL). The source of this contamination was a gasoline leakage from a UST system associated with an onsite service station. The USTs and surrounding sediments were excavated and removed as part of the site remediation. Additional information is available in the USGS Water-Resources Investigations Report (1996).

1.4.4 Dover Air Force Base, Delaware

The source area for this study is Target Area 1. It is situated in the West Management Unit (WMU) of Dover Air Force Base. The likely contaminant source is the WP21 impoundment, which received hazardous waste from 1963 to 1984. Contamination was first discovered in the water supply of a trailer park during the 1980s. Contaminated soil has been excavated and the

area backfilled with clean soil. Additional information is available in an investigation report by the U.S. Army Corps of Engineers (1999).

1.4.5 Naval Air Station Pensacola, Florida

The source area for this study is the wastewater treatment plant located in the corner of the base (USGS, 1999). Naval Air Station Pensacola, Florida is situated in Pensacola Bay in the far northwest corner of the state. At the time this HASP was prepared, no further historical or facility information was available.

2.0 SCOPE OF WORK

CDM will be collecting environmental samples from each site. This HASP describes procedures to be followed and personal protective equipment (PPE) to be used by CDM personnel performing the following field tasks:

- Collect groundwater samples from existing site monitoring wells (10 total)
  - Measure DH with Dissolved Hydrogen analyzer
  - Measure DH by Bubble-Strip method
  - Measure chemical parameters of groundwater
    - Obtain pore water samples from wells
    - Contain purge water
- Collect soil samples
  - Drill borings using a hollow-stem auger, Geoprobe, or hand auger
  - Collect 20 subsurface soil samples from each site
  - Contain excess soil cuttings and decontamination water
  - Conduct air monitoring using an organic vapor meter equipped with a photoionization detector (OVM-PID)
- Perform laboratory analysis
  - Bioavailable Ferric Iron Assay (performed by CDM in Bellevue, Washington)
  - Redox characterization of sediment and Aquifer samples (work will be conducted at Georgia Institute of Technology, Georgia)
  - Mineralogical Characterization of Precipitants (work will be conducted at the University of Colorado, Colorado)

3.0 CHEMICAL HAZARD ASSESSMENT

Personnel may be exposed to hazardous chemicals during field operations at the site. Exposure could result from physical contact with, inhalation of compounds volatilizing from, or inadvertent ingestion of contaminated soil or water. The following potential contaminants are present at each site:

Fort Lewis: trichloroethene, *cis*-1,2-dichloroethene, *trans*-1,2-dichloroethene, ethene, vinyl chloride

- SUBASE Bangor: dichloroethane, benzene, trichloroethane
- Laurel Bay: benzene, toluene, ethylbenzene, xylenes, methyl-tert-butyl-ether
- Dover AFB: trichloroethane, tetrachloroethene, trichloroethene, dichloroethene

NAS Pensacola: 1,3-dichlorobenzene, 1,2-dichlorobenzene, 1,4-dichlorobenzene, chlorobenzene

In general, acute short-term exposure to potential site contaminants may result in eye, nose, skin, and upper respiratory tract irritation. Mild narcosis, chest pain, difficulty breathing, nausea, vomiting, and diarrhea are indications of severe exposure. Some potential site contaminants are considered carcinogenic; therefore, exposure should be minimized. Observable symptoms in site personnel may indicate a chemical's permissible exposure level (PEL) is being exceeded. If such symptoms are observed, CDM personnel should leave the site and inform the CDM HSM, who will reevaluate conditions at the site and implement engineering controls before allowing CDM personnel to reenter.

3.1 CHLORINATED SOLVENTS

The most common chlorinated solvents include trichloroethene (TCE), trichloroethane (TCA, methyl chloroform), tetrachloroethene (PCE, perchloroethylene), dichloroethane (DCA, ethylene dichloride), and vinyl chloride. Dermal contact, inhalation, and ingestion are considered the most common exposure routes for chlorinated solvents. Many chlorinated solvents act as central nervous system depressants and are considered carcinogens of the liver, lung, skin, and blood-forming tissues.

Eye and skin irritation may result from prolonged or repeated dermal contact. Contact with some of these compounds may result in skin tissue freezing due to rapid evaporation. Toxic effects may result from repeated exposures to concentrations too low to cause narcotic effects that would normally produce an adequate warning of exposure; individual susceptibility varies widely. Symptoms of exposure include hallucinations and distorted perceptions, dizziness, drowsiness, lack of coordination, confusion, nausea, vomiting, and other gastrointestinal effects.

Symptoms indicating acute exposure to TCE include narcosis and anesthesia; death may occur and are attributed to ventricular fibrillation resulting in cardiac failure. Symptoms of chronic

exposure include eye effects, somnolence, hallucinations or distorted perceptions, gastrointestinal changes, and jaundice. Prolonged inhalation of moderate concentrations of TCE may result in headaches and drowsiness. TCE is also considered an eye and severe skin irritant. Chronic exposure to TCE may result in damage to the liver and other organs. In addition, TCE is considered a potential carcinogen by some organizations. The American Council of Governmental Industrial Hygienists (ACGIH) recommends an 8-hour time weighted average-threshold limit value (TWA-TLV) of 50 parts per million (ppm) and short-term exposure limit (STEL) of 100 ppm for occupational exposure to TCE. The Occupational Safety and Health Act (OSHA) permissible exposure level (PEL) for TCE is 100 ppm and the OSHA STEL is 200 ppm.

Symptoms indicating acute exposure to TCA include headache, lassitude, central nervous system depression, poor equilibrium, irritated eyes, dermatitis, and cardiac arrhythmia. Chronic exposure to TCA may result in damage to the skin, central nervous system, cardiovascular system, and eyes. TCA is also considered an eye and severe skin irritant. ACGIH recommends an 8-hour TWA-TLV of 350 ppm and STEL of 450 ppm for occupational exposure to TCA. The OSHA PEL for TCA is 350 ppm.

Symptoms indicating acute exposure to PERC include irritated eyes and skin, respiratory system anesthetic, and depression of the central nervous system. Chronic exposure to PCE may result in dermatitis and irritation of the gastrointestinal system in addition to those systems affected by acute exposure. ACGIH recommends an 8-hour TWA-TLV of 25 ppm and a STEL of 100 ppm for occupational exposure to PERC. The OSHA PEL established for PERC is 100 ppm and the OSHA STEL is 200 ppm.

Symptoms indicating exposure to DCA include irritated eyes, skin, and respiratory system; and depression of the central nervous system. Chronic exposure to DCA may result in damage to the respiratory system, eyes, and central nervous system. ACGIH recommends an 8-hour TWA-TLV of 10 ppm for occupational exposure to DCA. The OSHA PEL established for DCA is 50 ppm and the OSHA STEL is 100 ppm. DCA is considered a potential carcinogen.

Symptoms indicating acute exposure to vinyl chloride include severe irritation of the skin, eyes, and mucous membranes. Skin exposure may result in burns due to rapid evaporation and consequent freezing. At high concentrations, vinyl chloride acts as an anesthetic. Chronic exposure to vinyl chloride may result in damage to the reproductive system and liver. ACGIH recommends an 8-hour TWA-TLV of 5 ppm for occupational exposure to vinyl chloride. The OSHA PEL established for vinyl chloride is 1 ppm. Vinyl chloride is considered a potential carcinogen.

3.2 PETROLEUM PRODUCTS

Petroleum products usually include benzene, ethylbenzene, toluene, and xylenes (BTEX). Petroleum products also may contain cyclohexane, methyl tert butyl ether, and tetraethyl lead (leaded gasoline only.) The most common exposure routes for these compounds include inhalation and skin contact or absorption. Acute short-term inhalation of petroleum hydrocarbon concentrations up to 1,000 ppm may result in headache, dizziness, loss of appetite, weakness,

loss of coordination, and upper respiratory tract irritation. Inhalation of vapor concentrations in excess of 5,000 ppm may result in loss of conscious-ness, coma, and death. Dermal contact may result in eye and skin irritation. Benzene is considered carcinogenic; therefore, exposure should be minimized.

Symptoms indicating acute exposure to benzene compounds include irritated eyes, nose, and respiratory system; giddiness; headache; nausea; staggered gait; fatigue; and dermatitis. Chronic exposure to benzene may result in damage to the blood, central nervous system, skin, bone marrow, eyes, and respiratory system. The ACGIH recommends an 8-hour TWA-TLV of 0.5 ppm for occupational exposure to benzene. The OSHA PEL for benzene is 1.0 ppm and the STEL is 5 ppm.

4.0 PHYSICAL HAZARD ASSESSMENT

4.1 TEMPERATURE-RELATED HAZARDS

Ambient work site temperatures and the amount of physical activity performed may contribute to temperature-related illnesses in employees ranging from heat stress to hypothermia. Personnel performing physical labor while wearing protective clothing at temperatures greater than 70°F are subject to developing heat-related disorders. Employee temperatures and radial pulse rates should be monitored to ensure an adequate work/rest regimen is followed and heat-related illnesses are prevented. If temperatures exceed 80°F, personnel should take a 15-minute rest from strenuous activity every hour and drink plenty of water or an electrolytic beverage (e.g., Gatorade). Appropriate clothing should be worn if outside temperatures decrease to less than 40°F for more than 2 hours.

4.2 FIRE AND EXPLOSION HAZARDS

The risk of fire or explosion may be present during field activities. A combustible gas meter (CGM) should be utilized if OVM-PID readings indicate elevated volatile organic vapors in the work zone. If the CGM indicates combustible gas levels in the general work area at 20 percent of the lower explosive limit (LEL), work shall cease and the tasks will be reevaluated. Work involving welding or cutting shall not be performed if the CGM indicates concentrations have reached 10 percent of the LEL in the general work area. Engineering controls, such as ventilation, will be implemented to control combustible gas levels. As a precautionary measure, smoking will not be permitted on site at any time.

4.3 NOISE HAZARDS

Heavy equipment and drill rigs (Geoprobe) may be a source of high noise levels. Because noise levels vary for each piece of equipment, hearing protection will be provided as necessary. Personnel should utilize hearing protection while working within 15 feet of operating heavy equipment and drill rigs.

4.4 OXYGEN DEFICIENCY HAZARDS

Site personnel are not expected to encounter an oxygen-depleted atmosphere during site activities. Entry into a confined space is considered a last resort and requires an addendum to this HASP. Confined spaces are defined as any space having a limited means of egress and subject to the accumulation of toxic or flammable contaminants or an oxygen-deficient atmosphere. This definition includes, but is not limited to, tanks, silos, utility vaults, trenches over 4 feet deep and open-topped vessels with walls greater than 4 feet high.

4.5 UTILITY HAZARDS

CDM personnel should be aware of any overhead power lines located within 20 feet of the work area. If such lines are present, they should be guarded, insulated, or turned off. In addition, the Geoprobe contractor should utilize a locating service to determine whether underground utilities are in the area prior to beginning soil-sampling activities. Most State laws require a minimum 48-hour notice to utilities prior to the start of underground work. CDM personnel should be

satisfied utilities have been located and that this notice has been given. Since subsurface soil samples will be collected, any required dig permits will be acquired prior to fieldwork activities.

4.6 CONSTRUCTION HAZARDS

The principal construction hazards are expected to be those associated with Geoprobe sampling and traffic movement. Operation of the Geoprobe will be conducted by a qualified subcontractor and will be performed in accordance with applicable regulations.

When equipment is being loaded and unloaded, CDM personnel should stand clear to prevent injuries in case the load falls. CDM personnel should be aware of moving equipment and traffic at the site and stay out of the way; particular attention should be paid when backup alarms are sounding because operator visibility in the direction of travel may be decreased.

5.0 SITE WORK ZONES

Three work zones, described in the following paragraphs, will be established during site activities as a contamination control measure.

5.1 EXCLUSION ZONE

The exclusion (or work) zone is the area that contains or is suspected of containing contaminated soil or open monitoring wells. An area having an approximately 15-foot radius should be established around each sampling location to serve as the exclusion zone during work activities. These areas will cease being exclusion zones when contamination is no longer present or has been contained. Personnel should not be allowed to enter an exclusion zone unless they have been given permission by the SSO and otherwise follow all applicable portions of this HASP.

5.2 CONTAMINATION REDUCTION ZONE

A contamination reduction zone will be established adjacent to each exclusion zone to act as a transition area for personnel and equipment decontamination. The contamination reduction zone is also considered a restricted area; therefore, personnel must meet training and medical surveillance qualifications.

5.3 SUPPORT ZONE

The support zone is the area considered uncontaminated. This area is used to stage clean equipment and other support facilities. Visitors must stay in the support zone unless proof of training and medical clearance is shown to the SSO.

6.0 AIR MONITORING AND SAMPLING

Air monitoring will be conducted during site operations having a high potential to release contaminants. Monitoring will be used to document exposure levels and confirm that necessary precautions are taken to protect onsite personnel and the general public. In addition, air sampling may be performed if personnel exposures to organic vapors are suspected of exceeding established exposure limits.

Monitoring and sampling equipment will be calibrated daily in accordance with manufacturers' requirements. Calibration data, background readings, predominant wind direction, air monitoring readings, and air sampling information will be recorded as part of the daily field logs. If instrument readings are questionable or abnormal, the HSM should be notified.

6.1 AIR MONITORING

The organic vapor action level is based on readings obtained with an OVM-PID. Measurements are taken in the breathing zone, which is considered to encompass a sphere of 1-foot radius around a worker's nose during normal work operations.

Because the OVM-PID measures total organic vapors and cannot readily distinguish between compounds, a conservative organic vapor action level has been established. The organic vapor action level will be a sustained (5-minute) reading of 2.5 ppm (one-half the STEL for benzene) above background, measured in the breathing zone. If organic vapor levels exceed 2.5 ppm above background and cannot be controlled utilizing engineering controls, half-face respirators should be worn. If levels exceed 5 ppm above background, full-face respirators should be worn. If organic vapor concentrations exceed 50 ppm above background, work should cease and personnel should leave the site.

The action levels discussed above were determined to be sufficient based on a comparison of air sampling analytical results to air monitoring readings obtained using an OVM-PID or OVM equipped with a flame ionization detector (OVM-FID) during sampling. Action levels may be adjusted as additional information is obtained. CDM employees are instructed to stay outside the exclusion zone or upwind as much as possible. Such work practices will minimize the potential for exposures above established PELs.

6.2 AIR SAMPLING

Air samples have been collected for CDM employees observing, directing, and documenting operations at hazardous waste sites to document exposure of CDM personnel to benzene and total petroleum hydrocarbons (TPH). These air samples have been collected at various project locations during different phases of site operations. Analytical results received from these samples indicate no exposures to benzene greater than the PEL of 1 ppm measured as an 8-hour TWA at any site.

Additional air sampling may be conducted at the discretion of the CDM HSM, PM, or SSO. Personnel air sampling of organic vapors may be conducted using organic vapor diffusion

(OVD) badges or a charcoal tube and pump assembly. For personnel sampling, the OVD badge or charcoal tube should be placed within the breathing zone of the individual with the greatest potential exposure for 8 to 10 hours. OVD badges and charcoal tubes may be exposed for shorter durations if personnel leave the exclusion zone. Upon sampling completion, the OVD badges or charcoal tubes are collected and sealed, exposure times recorded, and the badges are sent to an independent laboratory accredited by the American Board of Industrial Hygiene (ABIH) to perform industrial hygiene analysis.

7.0 PERSONNEL PROTECTION

7.1 EXCLUSION ZONES AND CONTAMINATION REDUCTION ZONES

This section describes the PPE to be worn by personnel performing field operations within site exclusion and contamination reduction zones. Appropriate PPE was determined using information in Sections 3.0 and 4.0.

Head protection - American National Standards Institute (ANSI) approved hard hats shall be worn near heavy equipment and drill rigs, and whenever there is an overhead hazard.

Eye and face protection - Safety glasses shall be worn during sampling activities. When there is a high splash potential, face shields also shall be worn.

Foot protection - Steel-toe and -shank work boots shall be worn.

Skin protection - Coveralls should be worn. If direct contact with contaminated material is expected, Tyvek coveralls also should be worn. If the probability of being splashed or coming in contact with wet contaminants is high, personnel should wear polyvinyl chloride (PVC) rain suits or Saranax-coated Tyvek coveralls.

Hand protection - Personnel should wear two pairs of chemically protective gloves during sampling activities. An inner, surgical-type glove should be worn to lessen the chance of cross contamination during decontamination activities. Outer gloves should be made of Nitrile. If necessary, heavy-duty work gloves also may be worn. If work gloves are worn over chemically protective gloves, they should be considered disposable. An alternative is to wear the work gloves under the chemically protective gloves.

Respiratory protection - If organic vapor concentrations (measured in the breathing zone) exceed sustained (i.e., 5 minutes) readings of 2.5 ppm, personnel should wear National Institute of Occupational Safety and Health (NIOSH) approved properly fitted half-face respirators. Respirators should be equipped with organic vapor (OV) cartridges. Cartridges should be changed a minimum of once per day or more often if break-through is suspected. At organic vapor levels between 5 and 50 ppm measured in the breathing zone, personnel should wear full-face respirators equipped with the same type cartridge. At sustained concentrations greater than 50 ppm, work shall cease. Additional information concerning air monitoring is included in Section 6.0.

7.2 SUPPORT ZONES

Personnel working in a support zone, or in an exclusion or contamination reduction zone before or after contaminated material is present, are not required to wear protective clothing or respirators. Regular work clothing should provide adequate protection during operations in these areas. Hard hats, safety glasses, and steel-toe and -shank boots must be worn while heavy equipment is being mobilized.

7.3 SUMMARY

Levels of protective clothing have been assigned to each field task. Level D is considered general work clothing; Level C is considered general work clothing with the addition of chemically protective clothing and respirators. In some cases, personnel may wear respirators and no chemically protective clothing; this is referred to as Modified Level C protection. The levels of protection listed below may be altered based on additional information and field conditions. Final determinations concerning levels of protection will be made by the SSO and are subject to approval of the HSM. The following is a list of field tasks and the levels of protective clothing assigned to them:

- Collect groundwater samples from existing site monitoring wells - Level C or D (as determined on site)

- Collect soil samples - Level C or D (as determined on site)

- Perform laboratory analysis - Level D

8.0 DECONTAMINATION PROCEDURES

Decontamination procedures should be used for equipment and personnel to ensure contamination is controlled and not spread from the site. In addition, contact with contaminated material should be limited. Methods to minimize the spread of contamination include using plastic covers over field equipment and limiting personnel contact rates and areas. Used disposable protective equipment and decontamination water will be contained for offsite disposal.

8.1 PERSONNEL

Personnel should don protective equipment before entering exclusion zone and follow decontamination procedures before reentering the support zone. The level of protective equipment and therefore decontamination procedures may be altered based on additional information and field conditions. Decontamination should include the following steps:

- Wash and rinse outer clothing, boots, and gloves. A soap and water solution should be used for the wash.
- Remove outer gloves and protective clothing (if worn).
- Remove respirator and cartridge assembly (if worn); clean respirator.
- Remove inner gloves.
- Wash hands and face.
- Shower as soon as possible after leaving the site.

8.2 SAMPLING EQUIPMENT

Sampling equipment should be brought through the decontamination line with personnel and cleaned before returning it to CDM. Samples and sample coolers should be wiped down to prevent contaminating laboratory personnel.

8.3 HEAVY EQUIPMENT

Heavy equipment should be decontaminated before leaving the site. Heavy equipment is difficult to decontaminate; methods generally include washing with high pressure water or steam cleaning while scrubbing accessible parts. Particular care should be given tires, tracks, augers, buckets, and other components in direct contact with potentially contaminated material.

9.0 GENERAL SAFE WORK PRACTICES

If respiratory protection is required, a buddy system will be used to readily detect when emergency aid is required. No person will be allowed to work out of sight of other personnel.

A first aid kit and fire extinguisher will be available during site activities. Fire extinguishers should be within 50 feet of the work operation. A first aid kit , cell phone, and fire extinguisher will be present in CDM onsite vehicle.

Personnel shall not eat, drink, chew gum or tobacco, smoke, or perform any other practice that increases the probability of hand-to-mouth contact in site exclusion zones or contamination reduction zones.

The use of controlled substances or alcohol is forbidden at the site. In addition, personnel shall not work at the site while under the influence of such substances.

10.0 EMERGENCY PROCEDURES

Emergency response procedures have been developed for extraordinary events that could occur during field operations. These events include injuries, chemical exposures, fires, and spills. In general, the following actions should be implemented in the event of an emergency:

First aid or other appropriate initial action should be administered by those closest to the accident or emergency situation. This assistance should be conducted such that those giving assistance are not placed in a situation of unacceptable risk.

The CDM PM and HSM should be contacted immediately.

A Supplementary Record of Occupational Injuries and Illnesses Form (included as Attachment C) should be completed by the injured individual or witness and forwarded to the PM. The PM will review the form prior to forwarding it to the HSM. Changes to the operation should be made to prevent the same event from occurring in the future.

10.1 PHYSICAL INJURIES

If a person is physically injured or suffers a medical emergency, first aid procedures should be followed. Depending on the severity of the injury or medical condition, emergency medical response may be sought. Contaminated clothing may need to be decontaminated and removed prior to transport to an emergency medical facility.

10.2 CHEMICAL EXPOSURES

If the injury to the worker is chemical in nature, the following first aid procedures should be followed.

10.2.1 Eye Exposures

If contaminated solid or liquid enters the eyes, they should be flushed immediately with large amounts of clean water while occasionally lifting the upper and lower eyelids. Medical attention should be obtained immediately.

10.2.2 Skin Exposures

If contaminated material contacts the skin, the affected area should be washed promptly with soap and water. If contaminated materials penetrate clothing or protective equipment, the items should be removed and affected skin areas washed. Medical attention should be obtained if symptoms warrant.

10.2.3 Inhalation

Anyone inhaling a large volume of potentially toxic vapors should be moved to fresh air at once. If breathing has stopped, artificial respiration should be performed. Medical attention should be obtained immediately.

10.2.4 Ingestion

If contaminated material is swallowed, medical attention should be obtained immediately and the poison control center contacted for further directions.

10.3 FIRES

Fire extinguishers should be available on site and in vehicle cabs. In case of fire at the site, the following actions should be taken:

- Evacuate personnel from the site to an upwind location
- Notify the fire department and emergency response agencies
- Attempt to extinguish the fire using portable fire extinguishers or by smothering (only if the fire is small)

10.4 UNCONTROLLED RELEASE OF HAZARDOUS MATERIALS

The primary considerations during a hazardous materials spill are to prevent additional personnel from entering the area, contain existing spillage, and prevent further spillage. In the event of a hazardous materials spill at the site, the following actions should be taken:

- Evacuate personnel from the area.
- Summon emergency medical or fire services if the spill involves extremely toxic or flammable materials.
- Contain the spill with absorbent booms and block off the area. Drains, sewers, etc. should be blocked to prevent material from migrating.
- Attempt to stop the flow of material from its point of origin.

10.5 EMERGENCY NOTIFICATION SYSTEM

Generally, emergency notification is given by an air horn or car horn. The following signals are considered standard:

- One Long Blast - Warning; personnel should give necessary aid, prepare to evacuate, and await further instructions.
- Two Long Blasts - Evacuate; all personnel should evacuate the area.
- Three Long Blasts - All Clear; personnel may reenter the site.

10.6 EMERGENCY SERVICES

The telephone closest to each site should be located by the SSO prior to starting site work. If outside services (e.g., ambulance, fire, and police) are required, field personnel should

immediately telephone the local emergency number (911). The SSO should notify CDM at (425) 453-8383 after the emergency situation has been stabilized. If medical attention is needed but the situation is not an emergency, the injured employee may be transported to the hospital by other field personnel.

10.6.1 Hospital Route

Hospital route maps are shown on the following figures for each of the five sites:

- Figure 1 Fort Lewis
- Figure 2 SUBASE Bangor
- Figure 3 Laurel Bay
- Figure 4 Dover AFB
- Figure 5 NAS Pensacola

In cases involving severe emergencies, personnel should await emergency medical transport.

10.6.2 Emergency Telephone Numbers

The following emergency telephone numbers should be available at the site:

Fire 911

Ambulance 911

Paramedics 911

Police.....911

Poison Control Center.....911

Occupational Medical Consultant
(Dr. Calvin Jones) .....(425) 822-3651

CDM Health and Safety Manager (Monica Beckman).....(425) 453-8383
(Home).....(206) 760-1013

11.0 TRAINING

Personnel working at the sites will have received the required 40-hour training for work at hazardous waste sites in accordance with Occupational Safety and Health Administration (OSHA) regulations. Site personnel also will be up to date with respect to 8-hour annual refresher training requirements. At least one individual working at the site will be currently certified in First Aid and Cardiopulmonary Resuscitation (CPR) procedures. The PM will have completed 8 hours of specialized training for supervising workers at hazardous waste sites in accordance with OSHA requirements. Training records are maintained at CDM by the HSM.

12.0 MEDICAL SURVEILLANCE

CDM employees working at the sites will participate in a Medical Surveillance Program. The CDM Medical Surveillance Program is administered by Dr. Calvin Jones of Virginia Mason Occupational Medicine Clinic in Bellevue, Washington. Medical surveillance documentation is maintained at CDM by the HSM; actual medical examination results are maintained at the Virginia Mason Occupational Medicine Clinic.

Direct hire and new employees are given a baseline physical and annual examinations thereafter. The examining physician verifies in writing whether each individual is fit to work at hazardous waste sites and utilize protective equipment, including respirators. Additional medical examinations may be required during the course of the project if overexposure to site contaminants or an injury occurs.

The content of the medical examinations has been determined by the CDM Occupational Physician. The following are the minimum requirements of the medical surveillance examinations:

- Baseline head-to-toe examination
- Medical history, including work history, past exposures, hobbies, and family history
- Complete blood count and blood chemistries (including liver function, kidney function, heart function, and thyroid function screening)
- Urinalysis
- Spirometry
- EKG (every 2 years)
- Chest X-ray (every 2 years)
- Audiogram
- Vision acuity test

Additional tests may be conducted at the discretion of the examining physician.

13.0 HASP MODIFICATIONS

This project HASP should be reviewed and amended when:

- Applicable regulations are revised.
- Additional information concerning site contaminants, operations, personnel, and emergency services is obtained.
- Site operations are revised.

When the HASP is revised or addenda prepared, personnel shall review the changes or addenda and file a new Field Team Review Form with the HSM.

Attachment A

SUBCONTRACTOR SAFETY AGREEMENT FORM

_____ (hereafter called Subcontractor) has been retained by CDM Technologies (CDM) to assist CDM with field work at (_____). Subcontractor has read and understands the project Health and Safety Plan (HASP) dated July 26, 2001 for this project. Subcontractor is aware that their employees may be exposed to potentially hazardous materials and physical hazards during the performance of work at the above-referenced site.

Subcontractor shall ensure their employees, agents, subcontractors, and other invitees to the project site comply with all applicable health and safety laws and regulations, and the most recent version of their project HASP. Subcontractor is responsible for examining regulatory requirements and determining whether additional or more stringent health and safety provisions are required for their portion of work.

_____
Authorized Signature

_____
Printed Name

_____
Title

_____
Date

Completed copies of this form should be forwarded to the CDM Project Manager.

Attachment B

FIELD TEAM REVIEW FORM

FIELD TEAM REVIEW FORM

I have read and reviewed the most recent revision dated July 26, 2001 of the project Health and Safety Plan (HASP) for fieldwork at (_____). I have been given a chance to ask questions regarding the project HASP and understand the information contained therein. I agree to comply with all aspects of the project HASP.

Name: _____

Signature: _____

Company: _____

Date: _____

Completed copies of this form should be forwarded to the CDM Health and Safety Manager.

Attachment C

SUPPLEMENTARY RECORD OF OCCUPATIONAL INJURIES AND ILLNESSES FORM

SUPPLEMENTARY RECORD OF OCCUPATIONAL INJURIES AND ILLNESSES FORM

CASE NO: _____

THIS IS AN OFFICIAL DOCUMENT, BE THOROUGH AND ACCURATE.

This section to be completed by injured employee or witness:

Employer Name: CDM Technologies

Employer Address: 11811 N.E. 1st Street, Suite 201, Bellevue, Washington 98005

Project Name/Location: _____

Date of Accident/Incident: _____ Time: _____

Was place of accident/incident on employer's premises? Yes( ), No( )

Employee Name: _____

Employee Home Address: _____

Social Security Number: Age: Sex: M( ), F( )

Occupation/Department: _____

What was being done at time of accident/incident?_____

_____

_____

_____

_____

_____

How did the accident/incident occur? _____

_____

_____

Employee Signature: _____

Date: _____

SUPPLEMENTARY RECORD OF OCCUPATIONAL INJURIES AND ILLNESSES FORM (CONTINUED)

CASE NO: _____

THIS IS AN OFFICIAL DOCUMENT, BE THOROUGH AND ACCURATE.

This section to be completed by the Project Manager/Supervisor:

Time reported: _____ Did employee leave work? _____ When: _____

Date and time returned: _____

Nature of injury: _____

Exact body part affected: _____

Check one: Near Miss ( ), First Aid ( ), Doctor ( ), Hospitalized ( )

Doctor/Hospital Name: _____

Address: _____

Why did accident/incident occur? _____

_____

_____

_____

_____

What corrective action has been initiated to prevent recurrence? _____

_____

_____

_____

_____

Project Manager/Supervisor Signature: _____
Date: _____

This section to be completed by Health and Safety Manager:

Concur with action taken? Yes ( ), No ( ); Remarks: _____

_____

_____

_____

_____

Health and Safety Manager Signature: _____
Date: _____

Appendix E
Dissolved Hydrogen Analyzer Development

E.1 Technology Development and Application

The DH analyzer was largely developed under a Phase II Small Business Innovative Research (SBIR) grant funded by the Air Force and was documented in AGI 1999. This appendix details the chronology of development of the analyzer that was first used in the ESTCP demonstrations. Enhancements that were made to the analyzer during the ESTCP demonstrations are described in Section 3.4 of the text.

E.1.1 Sensor Procurement and Evaluation

Research into alternatives for measuring DH led to literature on metal oxide semiconductor devices that could detect hydrogen. With this discovery, work focused on developing a DH analyzer that used semiconductor-based hydrogen sensors.

The original sensors were manufactured by Professor C-C Liu of Case Western Reserve University (CWRU) using silicon-based microfabrication technology. The process included a platinum resistance temperature detector (RTD), platinum heater, and Shottky diode with a hydrogen-sensitive gate. The Shottky diode was a metal-insulator-semiconductor (MIS) diode with p-type silicon semiconductor, an insulator composed of silica, and a metal palladium/silver gate. The semiconductor, including the heater, RTD, and diode, was enclosed in a protective housing.

Calibration curves were established for sensors by relating response to hydrogen concentration. At high concentrations, solid-state sensors for hydrogen yield a steady-state output voltage that is directly related to the hydrogen concentration. However, at low concentrations, these sensors did not yield a steady-state output voltage. The sensor output increased continuously, and the rate of this output increase was linearly related to the hydrogen concentration. The reasons for this unexpected observation may be diffusional limitations of hydrogen through the gate that occur at low hydrogen concentrations.

E.1.2 Prototypes I and II Development

Initial testing of the semiconductor-based hydrogen sensors was performed on Shottky diode sensors containing a sputtered coating of 13 percent silver plus 87 percent palladium. Prototype I was fabricated with a millivolt (mV) output for hydrogen and temperature. The temperature on the sensor was controlled by powering the heater with a constant voltage; thus, sensor output fluctuated because of temperature fluctuations. These fluctuations led to the fabrication of Prototype II, which included an operational amplifier to control the temperature. Although the temperature was stable, the instrument was extremely sensitive to electromagnetic fields (EMFs), and was thus unsuitable for use. Prototypes I and II were designed to directly use the sensor as a probe.

During the testing of Prototype II, concurrent experiments were performed exploring the equilibration of DH in water with a carrier gas. Successful laboratory experiments performed with manual valves to direct gas flow to the sensor led to the development of Prototype III.

The sensor was incorporated into a probe that could be submerged directly into groundwater. The probe was constructed using a MiniMag (Valor Corporation, Sunrise, Florida) flashlight for the sensor housing. Various membranes were placed over the sensor element to prevent water from contacting the sensor. Potential membranes included a Goretex® pipe thread tape membrane, a 0.45-micrometer (µm) pore filter membrane made of cellulose nitrate, and a Goretex 0.45-µm pore filter membrane with polyester spunbound backing were evaluated. The 0.45-µm Goretex filter membrane was selected because planned experiments involved placing the sensor directly in water and hydrogen transfer was expected to be high through the 0.45 µm pores.

Sensor response using the probe was slow and inconsistent, possibly because of liquid-phase mass transfer limitations. This inconsistency led to the construction of a more efficient sampling device designed to measure hydrogen in a gas phase equilibrated with flowing groundwater. This device was constructed with a 250-milliliter (mL) gas-sampling bulb made from glass and typically used for DH sampling with the RGD2. A glass #15 Ace thread was fused to the bulb to hold the sensor housing. A #15 Teflon® stopper to house the sensor was fitted with 0.45-µm Goretex filter membrane mounted on a polycarbonate ring.

This apparatus was tested by (1) connecting the bulb to the discharge of a peristaltic pump, (2) filling the bulb with water, (3) injecting 10 mL of nitrogen through the septum, and (4) maintaining the water flow through the bulb while the bulb was held vertically. The DH in the flowing stream of water equilibrated with the nitrogen bubble. The sensor detected hydrogen that diffused through the Goretex filter membrane. Gas sampling for comparison was done by placing the bulb in a horizontal position so the gas bubble is under the septum. The gas bubble sample was analyzed using the RGD2.

During the week of March 9, 1998, field tests of the DH analyzer were conducted at the Natural Attenuation Test Site (NATS) in Columbus, Mississippi. The tests used the gas-sampling bulb device to measure hydrogen in a gas phase equilibrated with groundwater. Results at the NATS site demonstrated that the hydrogen sensor could measure DH directly in groundwater. The sensor was sensitive to DH concentrations in the range of 10 nM. Lower concentrations were not consistently detectable, apparently because of the dissolved oxygen in the groundwater.

Sensor Modifications to Address Oxygen Interference

During development of the DH analyzer, CWRU produced variations of the Shottky diode sensor to eliminate or minimize oxygen interference.

Evaporated Gate – In an attempt to increase the sensitivity of the sensor in the presence of oxygen, the palladium-silver gate was evaporated rather than sputtered. A greater range of

response was observed with the sputtered sensor. Based on these results, further testing of the evaporated type of sensor was terminated.

Alumina – The alumina series sensors had a thin film of alumina between the gate and the oxide layer. This design has greater baseline stability in nitrogen but is still sensitive to oxygen. The alumina sensors were selected for further use.

Nafion – To reduce the sensor sensitivity to oxygen, experiments with sensors that had a Nafion layer deposited on the silicon surface were performed. Nafion is a perfluorinated ion-exchange membrane with a wide variety of commercial uses. Nafion is designed to be permeable to protons, but molecular hydrogen permeability through a commercial Nafion 117 membrane is twice that of oxygen permeability.

Tests results with the Nafion-coated sensors showed a reduced sensitivity in hydrogen when compared with the sputtered sensors. In addition, response in 1.0 ppmv hydrogen in nitrogen with 5 percent oxygen present resulted in a 30-fold decrease in response compared to without oxygen, indicating that Nafion did not prevent oxygen interference.

Oxygen Removal From Groundwater – Results from testing the sensor at the NATS site in Columbus, Mississippi and laboratory testing confirmed that oxygen decreased the sensitivity of the sensor to hydrogen. Therefore, efforts were made to remove oxygen from water.
A copper oxide catalyst named R3-11 (BASF Corporation, Mount Olive, New Jersey) was reduced with hydrogen, placed in a 250-mL gas-sampling bulb, and connected to the discharge of a peristaltic pump. The reduced copper oxide (now elemental copper) was able to remove dissolved oxygen from water from saturation down to 0.4 parts per million (ppm). However, complete removal of oxygen was required. In addition, reducing the copper oxide with hydrogen was a safety hazard. Thus, other methods were explored.

Sodium bisulfite and ferrous sulfate were added directly to distilled water saturated with oxygen to lower the dissolved oxygen concentration. Both additions were successful in nearly complete removal of dissolved oxygen; however, this was not considered a practical field application because at least 10 grams (g) were required to completely remove dissolved oxygen from 2 gallons of water.

A sulfite-containing resin for dissolved oxygen removal [model number D0811 manufactured by Barnstead (Dubuque, Iowa)] demonstrated the capability to remove dissolved oxygen from groundwater to less than 0.1 ppm. The resin was contained in a column 10 inches (in.) long by 2.5 in. wide. Groundwater was pumped through the resin before it entered a gas sampling bulb. Experiments done in a closed loop indicated that the resin generated DH.

E.1.3 Prototype III Development

To optimize performance and minimize time required for each test, results from laboratory testing of the earlier prototypes were used to make several modifications to the DH analyzer. The

DH analyzer was divided into two process loops: one loop for gas-liquid equilibration (GLE) (left-hand side loop) and the other for carrier gas pretreatment (right-hand side loop).

E.1.3.1 Gas-Liquid Mass Transfer of Hydrogen

Several gas-permeable membranes were evaluated for hydrogen transfer from the aqueous phase to the vapor phase. The basic design of these membranes included hollow fibers and a shell surrounding the fibers. A carrier gas travels within the hollow fibers, while the liquid travels outside the fibers. In addition, various sparging devices were also evaluated.

Proprietary Hollow-Fiber Membrane – A proprietary hollow-fiber membrane was tested for hydrogen transfer. This model had 16 square feet (ft^2) of membrane. Hydrogen transfer experiments of the membrane were unsuccessful.

Neomecs – A hollow-fiber membrane manufactured by Neomecs (Eden Prairie, Minnesota) contained 0.5 ft^2 of a coated microporous hollow fiber. The Neomecs model GT-02010013 module, which had 0.13 ft^2 of the identical membrane, was substantially inferior to the model GT-0204005. This inferiority was mainly because of the liquid flow design and not because of the difference in membrane surface area. A mass transfer time of 10 minutes was sufficient for equilibration of DH. Results indicated that at higher concentrations of hydrogen the equilibration time was slightly longer.

Liqui-Cel® – A Liqui-Cel membrane contactor (Celgard LLC, Charlotte, North Carolina) was also evaluated. The contactor could transfer 10 ppm hydrogen within 15 minutes; however, to achieve the desired transfer rate, a liquid flow rate of at least 1.7 liters per minute (L/min) was required. Thus, the contactor was not a practical option given the smaller modules available that operated efficiently at flow rates less that 1 L/min.

FiberFlo – A FiberFlo (Minntech Corporation) hollow fiber capsule filter module was tested and proved as efficient as the Neomecs module. The polypropylene membrane had a surface area of 0.95 m2. The fibers were enclosed in a polycarbonate shell measuring 6.5 in. long by 0.75 in. wide. The FiberFlo transferred 10 ppm hydrogen within 15 minutes.

Sparging Devices – In an attempt to reduce equilibration time, several non-membrane gas-liquid mass transfer devices were tested. Hydrogen mass transfer rates for these devices were not as high as those for the hollow fiber devices. The reason is that these devices contained a greater gas equilibration volume relative to the hollow fiber devices.

E.1.3.2 Removal of Interferences

Throughout development of the DH analyzer, interfering gases were found to inhibit sensor performance. In an effort to remove these interferences, various laboratory experiments were performed to test several products. The following paragraphs describe these experiments.

Oxygen Removal From Carrier Gas – Oxy-Trap (Alltech Associates, Deerfield, Illinois) contains crushed catalyst R3-12 (BASF Corporation) that is effective in removing oxygen from a

gas. The R3-12 catalyst is composed of copper oxide and zinc oxide on an alumina support. This catalyst is widely used for gas purification. An Oxy-Trap cylinder that was 10.5 in. long by 1.5 in. wide, and an Oxy-Trap 0.25-in. coil of the packed R3-12 were tested and found to remove oxygen; however, hydrogen was produced since the Oxy-Traps were made by first adding oxidized R3-12 to the containers and then reducing the catalyst with hydrogen gas.

R3-11 is another BASF product and is a copper oxide catalyst on an aluminum oxide support. The R3-11 catalyst removed oxygen but also produced hydrogen. The catalysts were reduced with pure hydrogen; thus, hydrogen remained in the pores of the catalysts. Attempts were made to flush hydrogen from R3-11 and R3-12 using nitrogen, but experiments performed after the nitrogen purge show that hydrogen was still present in the catalysts. Alternatively, CO was used to reduce the catalysts; however, this approach was unsuccessful because hydrogen was adsorbed by these catalysts.

Hydroquinone was a potential alternative for oxygen removal. A solution of 500 millimolar (mM) hydroquinone was prepared by boiling 1 normal (N) sodium hydroxide while sparging with nitrogen. An aliquot of the solution was transferred to a 4 in. long by 0.5 in. diameter cartridge purged with nitrogen containing an absorbent cotton ball. The cartridge was placed in a loop with a vacuum pump. Oxygen, hydrogen, and CO were monitored over time. The gas in the loop initially was air. When the pump was turned on, the hydroquinone immediately turned green and then dark brown. Oxygen was removed within 5 minutes, hydrogen remained constant, and CO was produced to greater than 0.1 percent. Although oxygen was removed using hydroquinone, preparation of the solution is inconvenient and hydroquinone is toxic.

In-vitro (Mitsubishi Gas Chemical Corporation, New York, New York), an iron powder-based product for food preservation via oxygen removal, was also tested. The *In-vitro* powder (54.9 g) was placed in a 5 in. long by 0.5 in. diameter tube. Air was passed through the tube at 900 milliliters per minute (mL/min). Oxygen and hydrogen were monitored over time. Results from this experiment showed that oxygen removal by *In-vitro* was too slow and that *In-vitro* also generated hydrogen.

An ascorbic acid-based preparation named Anaeropack™ (referred to as MGC in this report), manufactured by Mitsubishi Gas Chemical Corporation America, Inc. (New York, New York), was tested for oxygen removal efficiency. Although MGC could remove oxygen, it produced CO when exposed to oxygen. Sensor response was found to decrease dramatically in the presence of CO.

Although MGC produced CO, it was selected over the other alternatives. MGC was selected because it removed oxygen from a gas stream faster than the other alternatives tested, and it did not require additional treatment before use.

CO Removal From Carrier Gas – Testing indicated that sensor response to hydrogen in nitrogen was attenuated by CO. Therefore, CO that was produced by MGC required removal. Carulite™, formerly known as Hopcalite, is a low-temperature CO oxidation catalyst composed

of manganese dioxide, copper oxide, and aluminum oxide. Carulite is manufactured by Carus Chemical Company (Peru, Illinois). It was placed in a cartridge with MGC and tested for CO removal efficiency. CO was not removed.

Catalyst R3-11 in its oxidized form could remove CO from a carrier gas when heated. Temperature was significant because, at temperatures that were too low, sufficient CO removal did not occur; at too high temperatures, corrosion processes caused hydrogen generation. Vendor literature indicates that a minimum of 100 degrees Celsius (°C) was required for CO removal. However, R3-11 was efficient at removing CO at temperatures between 55°C and 80°C. When heated to 55°C, the catalyst removed CO to less than 0.001 percent without producing hydrogen. Testing results show that at temperatures of 62°C and higher, CO was removed; however, hydrogen was generated at temperatures of 87°C and higher.

CO was likely adsorbed to oxidized R3-11, but was not oxidized to carbon dioxide at temperatures below 100°C. Hydrogen was not adsorbed on oxidized R3-11 at these temperatures and at room temperature. These observations were unexpected and resulted in the use of oxidized R3-11 (instead of reduced R3-11) for removing CO. The R3-11 would have a finite lifetime because CO would likely be adsorbed rather than oxidized to carbon dioxide. When saturation of the available binding sites occurs, the R3-11 would require replacement or regeneration.

The presence of water vapor also limited the lifetime of the R3-11. The likely reason was that the metal oxide composition was being used at temperatures below the boiling point of water; thus, water vapor condensed on the metal oxide surface and decreased the capacity for CO adsorption. The moisture produced by the MGC appeared to inhibit adsorption of CO by the R3-11. This led to the use of a 13X molecular sieve and Drierite (Hammond, W. A. Drierite Company, Ltd.; Xenia, Ohio) for moisture removal from the carrier gas.

The R3-11 catalyst was placed in a brass pipe 5 in. long by 1 in. wide with brass end caps and parts. A 12-V subminiature temperature controlled heater, model DN-515-1528 manufactured by Dawn Electronics Inc., was mounted on the outside of the pipe. A 500-ohm resistor was soldered to the heater to maintain the temperature at 55°C. A thermometer was mounted on one end of canister so that temperature would be viewed. The brass pipe was insulated with 0.5-in.-thick pipe insulation. Brass hose barbs were connected to the pipe for gas flow.

Hydrogen Sulfide Removal – Sulfur compounds such as H_2S can interfere with measurement of hydrogen by the sensor. Sulfur compounds, when present, are more problematic than oxygen and CO because they can poison the sensor and disable it from further use. Use of hydrated iron oxide was evaluated and found to be capable of H_2S removal. Catalyst R3-11 can also remove H2S; thus, it was used for this purpose in addition to CO removal.

E.1.3.3 Prototype III Electrical/Mechanical Design

Prototype III was built to contain a Model 205 programmable logic controller (PLC) with a liquid crystal display (LCD) screen by Koyo Corporation (Westlake, Ohio), and a network of automated solenoid valves to control gas flow. Sensor temperature was controlled in this unit by

a proportional-integral-derivative controller. The analyzer used a 12-volt direct current (VDC) or 12-volt alternate current (VAC) power supply and connected to the discharge of a groundwater extraction pump such as a bladder pump or peristaltic pump. Prototype III was designed as a flow-through unit in which the sensor detects hydrogen in a carrier gas equilibrated with extracted groundwater.

During testing of the prototypes, hydrogen concentrations in gas were verified by injecting a sample of the gas into a RGD2 reductive gas analyzer manufactured by Trace Analytical (Menlo Park, California). Hydrogen concentrations in water were verified using the bubble-strip method with the reduction gas analyzer. The RGD2 was connected to a Carbosieve II (Supelco, Bellefonte, Pennsylvania) column operated at room temperature. Carbon monoxide (CO) was also monitored on this system.

Oxygen removal was monitored by collecting samples from the gas streams and analyzing them on a Hewlett Packard Company (Palo Alto, California) 5890 gas chromatograph with thermal conductivity detection.

Stage 1 - Analyzer Stabilization

During the sensor preparation stage, the air pump pulled air in through the solenoid valve. The air then discharged from the pump through the molecular sieve, the heated R3-11, and the hydrogen sensor before discharging into the atmosphere. The purpose of the air purge was to allow any residual hydrogen on the sensor to be oxidized by the oxygen present in air. A sensor output voltage that did not return to its baseline voltage following exposure to hydrogen typically indicated the presence of residual hydrogen on the sensor.

The length of the air purge stage depended on the characteristics of the sensor. For a metal-oxide semiconductor Shottky diode with a palladium/silver gate and an alumina insulator, a 1-minute air purge was sufficient. Preconditioning was regularly required. This pre-conditioning included exposure to nitrogen or hydrogen at a temperature of 150°C for 1 minute during a test or 0.5 to 1 hour if the analyzer had not been used for more than 24 hours.

During the nitrogen purge stage that followed the air purge, nitrogen gas was used to purge air and traces of hydrogen from the MGC, molecular sieve, heated R3-11, and tubing. The purpose of this stage was to remove traces of hydrogen that could interfere with quantification of low concentrations of DH. Nitrogen entered the analyzer through a solenoid valve from a compressed gas cylinder. Nitrogen passed through the MGC, pump, molecular sieve, heated R3-11, and hydrogen sensor before discharging through the vent.

Stage 2 - Gas-Liquid Equilibration

In the GLE stage, solenoid valves were adjusted to promote flow through the pump, molecular sieve, heated R3-11, and gas side of the GLE device, in this case the Neomecs. The liquid being analyzed was pumped through the liquid side of the Neomecs by the water pump. The time required for hydrogen in the liquid to equilibrate with the carrier gas was typically 10 minutes.

Stage 3 - Carrier Gas Preconditioning
In the third stage, oxygen, CO, water, and sulfur compounds were removed from the carrier gas. Solenoid valves were adjusted to promote carrier gas flow through the molecular sieve, heated R3-11, MGC, and back to the air pump. During gas flow through this circuit, oxygen, CO, water, and sulfur compounds were removed from the carrier gas to levels such that the hydrogen sensor could detect low levels of hydrogen in the carrier gas.

Stage 4 - Hydrogen Detection
In the final stage, the hydrogen sensor measured hydrogen. Solenoid valves were adjusted to promote flow past the sensor. During the measurement stage, data were recorded from the sensor. The output from the sensor was monitored over time, and the rate of voltage increase was calculated. This rate was compared with a calibration curve to quantify the hydrogen concentration. For example, a concentration of 0.1 ppm hydrogen (approximately 0.08 nM) yielded a rate of about 10 millivolts per minute (mV/min); a concentration of 1.0 ppm hydrogen (approximately 0.8 nM) yielded a rate of about 100 mV/min, and a concentration of 10 ppm hydrogen (approximately 8 nM) yielded a rate of about 1,000 mV/min.

Sensor Calibration
Sensor calibration was completed in the same manner as a test for water. Instead of hooking up the discharge from a water pump, a cylinder of compressed hydrogen gas was connected to the gas-liquid mass transfer device. During the GLE stage, the hydrogen in the calibration gas was equilibrated with the carrier gas. A calibration factor was then calculated based on sensor response.

The DH analyzer prototype III gave a linear response that was sensitive to less than 0.2 nM. Groundwater flow rates through the prototype III ranged from 0.75 to 1.0 L/min. Each analysis took about 20 minutes, which was in four stages, each lasting about 5 minutes: analyzer stabilization, GLE, carrier gas preconditioning, and hydrogen detection.

E.1.4 Prototype IV Development
Design of Prototype IV was based on the same process flow diagram as Prototype III. Prototype IV was controlled by a PK2110 Microcontroller manufactured by ZWorld (Davis, California). The controller has a variety of digital and analog inputs and outputs, a built-in LCD, a keypad, and a protected enclosure. Programs for the PK2110 were developed using the Dynamic C software development system also provided by ZWorld.

Compressed gas cylinders for nitrogen and calibration gasses were mounted inside the unit with fill ports on the instrument for refilling. The FiberFlo hollow-fiber module was used in Prototype IV in place of the Neomecs module. Neomecs was unable to fill order requirements; thus, the FiberFlo was selected as a suitable alternative.

Catalyst R3-11 in the Prototype IV was equipped with a thermocouple and transmitter; with these, the controller could detect whether the catalyst is at the required temperature.

The proportional-integral-derivative controller for the sensor heater was embedded in the Z-World controller code. Connections for tubing were completed using one-touch pneumatic fittings that dramatically lessened leaks. Leaks had been a continuing problem with Prototype III.

Prototype IV is the design that was first used in the ESTCP demonstration.

Appendix F
Site 1 – SUBASE Bangor
Site Information

Table F-1: Site Selection Information for SUBASE Bangor		
(Source: EA, January 2000)		
Well Information		
Number of wells	76	
Well depth	Shallow Wells: are screened within 30 ft below the water table	
	Intermediate Wells are screened within the middle 40 ft of the Vashon aquifer thickness	
	Deep Wells are screened within 30 ft of Lawton Clay	
Well development	Yes	
Extraction flow rate	500 mL /minute	
Groundwater Information		
Depth to GW	19 – 22 ft bgs (EFA NW comments 10/25/00)	
Groundwater sampling	Low-flow purge sampling techniques w/ peristaltic pump	
Aquifer thickness	(approximately 125 ft thick in public works area)	
GW flow direction	Southeast	
Hydraulic conductivity	67 ft/day	
Soil Information		
Soil Types	**Thickness**	**Depth (ft)**
Construction Fill		2 to 3 ft bgs
Vashon Till	20 to 40 ft	15 to 45 ft bgs
Vashon Advanced Outwash	100 to 130 ft	30 to 160 ft bgs
Silty Transition zone	20 to 50 ft	110 to 160 ft bgs
Lawton Clay		100 to 160 ft bgs

Table F-1: Site Selection Information for SUBASE Bangor (cont.)						
Contaminant Information (Based on wells in Appendix A, EA, January, 2000)						
Contaminants	**Depth to Contaminants**			**Max. (µg/L)**	**Min. (µg/L)**	**Average (µg/L)**
1,2-DCA	Shallow			1500	0	214
Benzene	Shallow			7800	0	1330
1,1,2-TCA	Shallow			2.1	0	0.16
1,2-DCA	Intermediate			48	0	8.9
Benzene	Intermediate			2.3	0	0.30
1,1,2-TCA	Intermediate			29	0	3.5
	Shallow			**Intermediate**		
Groundwater Chemistry	**Max.**	**Min.**	**Average**	**Max.**	**Min.**	**Average**
Turbidity (NTU)	644	0	220	280	0	53
Temperature (C)	27.4	10.22	14.6	24.9	10.1	14.1
Sulfide (mg/L)	1.2	0	0.16	0	0	0
Sulfate (mg/L)	27	0	6.7	12	5	6.6
pH	7.24	6	6.54	7.42	6.25	6.91
BOD(mg/L)	34.5	0	11.7	0	0	0
Nitrite (mg-N/L)	0.57	0	0.04	0	0	0
Nitrate (mg-N/L)	4	0	0.52	1.0	0	0.31
N as Ammonia (mg/L)	0.47	0	0.21	0.26	0.11	0.16
Methane (mg/L)	1.48	0	0.14	0.02	0	0
Manganese (µg/L)	6730	0	3410	2700	0	400
Iron-II (mg/L)	1.35	0.04	1.35	1.4	0	0.34
Iron (µg/L)	15200	0	2460	734	0	116
Hydrogen (nM)	36.72	0	4.0	10.84	0	1.82
Eh (mV)	187	-217	-9.2	149	-26	63.9
DO (mg/L)	7.7	0	1.6	4.63	0.08	1.22
Conductivity (mS/cm)	0.86	.095	0.42	0.28	0.1	0.17
Chloride (mg/L)	61	2.8	11.3	7.7	1.4	3.8
TIC (mg/L)	128	13.2	79.3	55	14.4	26.6
TOC (mg/L)	114	0	16.1	2.1	0	0.52
Carbon dioxide (mg/L)	400	47.8	190	118	20	51.8
Bromide (mg/L)	1.1	0	0.23	0	0	0
Total Alkalinity	447	61.2	242	276	58.4	123

Table F-2: Water Quality Parameters at Site 1 – SUBASE Bangor

Well	Temp (C)	Spec. Cond. (µmhos/cm)	pH	ORP (mV)	DO (mg/L)
28MW01	25.82	1019	6.7	-124	0.13
8MW06	14.52	791.9	6.91	-153	0.00
8MW24	17.23	623.5	6.84	-141	0.02
8MW30	16.69	551.9	7.06	-244	0.00
8MW42	14.59	823.8	6.37	-25	0.00
8MW47	17.57	537.7	6.51	-120	0.01
8MW48	14.81	757.8	6.68	-268	0.70
8MW53	22.63	726.9	6.85	-219	0.01
MW03	14.24	768.7	6.34	-111	0.09
MW05	13.95	505.1	6.49	-156	0.14

Appendix G
Site 2 – Fort Lewis Logistics Center
Site Information

Table G-1: Site Selection Information for Fort Lewis					
(Source: Draft RABITT Technology Demonstration Plan, Battelle, May 2000)					
Well Information					
Number of wells	80 + monitoring wells and piezometers				
Well construction	1/2 in. dia. / 26.75 to 28.25 ft bgs screen interval/				
	slot size 0.01, PVC				
Well development	sampled quarterly				
Extraction flow rate	0.833 l/min				
Groundwater Information					
Depth to GW	8-15 ft (in source area)				
	10-35 (down gradient)				
Aquifer Info	unconfined water table aquifer				
	mostly anaerobic				
	Shallow aquifer				
	Lower aquifer				
Groundwater sampling	peristaltic pump				
Hydraulic conductivity	10-100 ft/day				
GW flow rate	3-3.5 ft/day				
GW flow direction	west to northwest				
Soil Information					
Soil Types	Thickness	Depth (ft)			
Alluvial sands and gravel					
Sandy coarse gravel	13 ft				
Vashon Till (sand, silt, clay)		260 ft msl			

Table G-1: Site Selection Information for Fort Lewis (cont.)					
(Source: Draft RABITT Technology Demonstration Plan, Battelle, May 2000)					
Contaminant Information					
Contaminants	**Depth to contaminants**	**Max. (µg/L)**	**Min. (µg/L)**	**Average (µg/L)**	
TCA				< 5	
TCE (source area)	shallow zones	80,000	0		
DCE (source area)	shallow zones	500	0		
VC (source area)	shallow zones	200	0		
TCE (downgrade plume)		100	10		
DCE (downgrade plume)		10	1		
Groundwater Chemistry	**Max.**	**Min.**	**Average**		
Temperature (C)	13	10			
Sulfate (mg/L)	10	4			
pH	7.5	6.5			
Nitrate (mg/L)			< 1.0		
Iron-II (mg/L)	0.77	0.05			
Iron (mg/L) (aerobic)	0.79	0.08			
Iron (µg/L) (anaerobic)	1500	300			
DO (mg/L)	3.26	0.24			
TOC (mg/L)	1.9	0.2			
Total Alkalinity	95	55			

Table G-2: Water Quality Parameters at Site 2 – Ft. Lewis

Date/Time	Well	Temp (C)	Spec. Cond. (µmhos/cm)	pH	ORP (mV)	DO (mg/L)	Comments
2/22/2001 7:54	BACKGROUND WELL	9	106.4	6.67	68	11.72	
2/19/2001 0:00	BACKGROUND WELL	10.43	103	6.69	75	13.92	
2/23/2001 9:54	MW9	9.89	920.1	6.54	25	0.00	Initially turbid
2/23/2001 15:00	PZ1	10.73	800.4	5.80	-52	0.00	Strong odor, slight eff, slight tint
2/22/2001 12:02	PZ2D	9.82	298.1	6.44	61	4.27	Strong effervescense, did not equilibrate
2/22/2001 16:42	SP07	9.04	149.2	6.43	89	1.57	
2/22/2001 14:52	SP10	9.59	95.1	16.72	79	6.71	Initially turbid, slight brown tint
2/21/2001 12:30	SP5	8.93	209.9	6.14	-143	0.00	Odor, turbid
2/23/2001 8:40	ST3	8.97	97	6.52	168	9.37	
2/23/2001 13:40	ST7	10.2	101	6.50	10	1.93	Odor, color, turbid, TCE contaminated
2/23/2001 10:55	ST9	10.99	851.3	5.50	-52	0.00	Effervescence, slightly turbid, strong odor, brown tint

Appendix H
Site 3 – Pensacola Naval Air Station
Site Information

Table H-1: Site Selection Information for Naval Air Station Pensacola

(Source: USGS December 1999)			
Well Information			
Number of wells	17		
Age of wells	Installed 1998		
Well construction	Installed with a Geoprobe, the wells consist of 3/4 inch PVC threaded casing.		
Well development	yes		
Extraction flow rate	0.5 to 1 liter/min		
Groundwater Information			
Depth to GW	3-5 feet		
Hydraulic conductivity	88.65 ft/day		
GW flow rate	0.21 ft/day		
GW flow direction	Northeast		
Soil Information			
Soil Types	**Thickness**		
Sediments	40 ft		
Silts and clays	20 ft		
Permeable sands and gravel			
Soil sampling methods	Direct push		
Contaminant Information			
Contaminants	**Depth to contaminants**	**Max.(µg/L)**	**Min.(µg/L)**
1,3-DCB	20-40 ft bgs	1250	<5
1,2-DCB	20-40 ft bgs	1240	<5
1,4-DCB	20-40 ft bgs	784	<5
CB	20-40 ft bgs	56.7	<5

Table H-1: Site Selection Information for Naval Air Station Pensacola (cont.)

(Source: USGS December 1999)

Groundwater Chemistry	Max.	Min.
Total Sulfide (mg/L)	3.5	0
Methane (mg/L)	5.8	0
Iron-II (mg/L)	6.5	0.1
Hydrogen (nM)	10.8	0.1
DO (mg/L)	0.1	0

Appendix I
Dissolved Hydrogen Analyzer Design

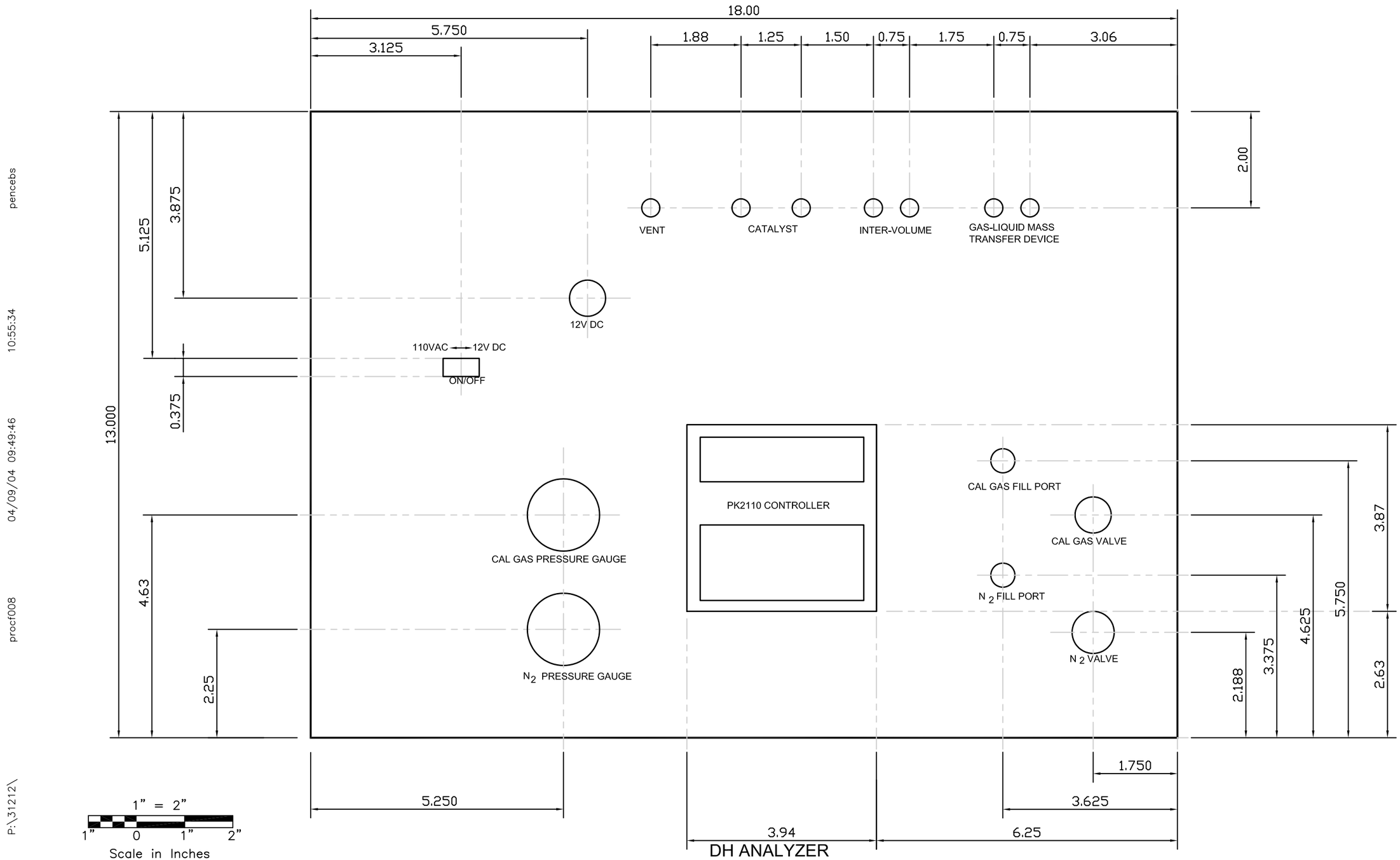

DH ANALYZER
US PATENT No. 6,277,329

CDM

Figure No. I–1
Layout – Top of Panel

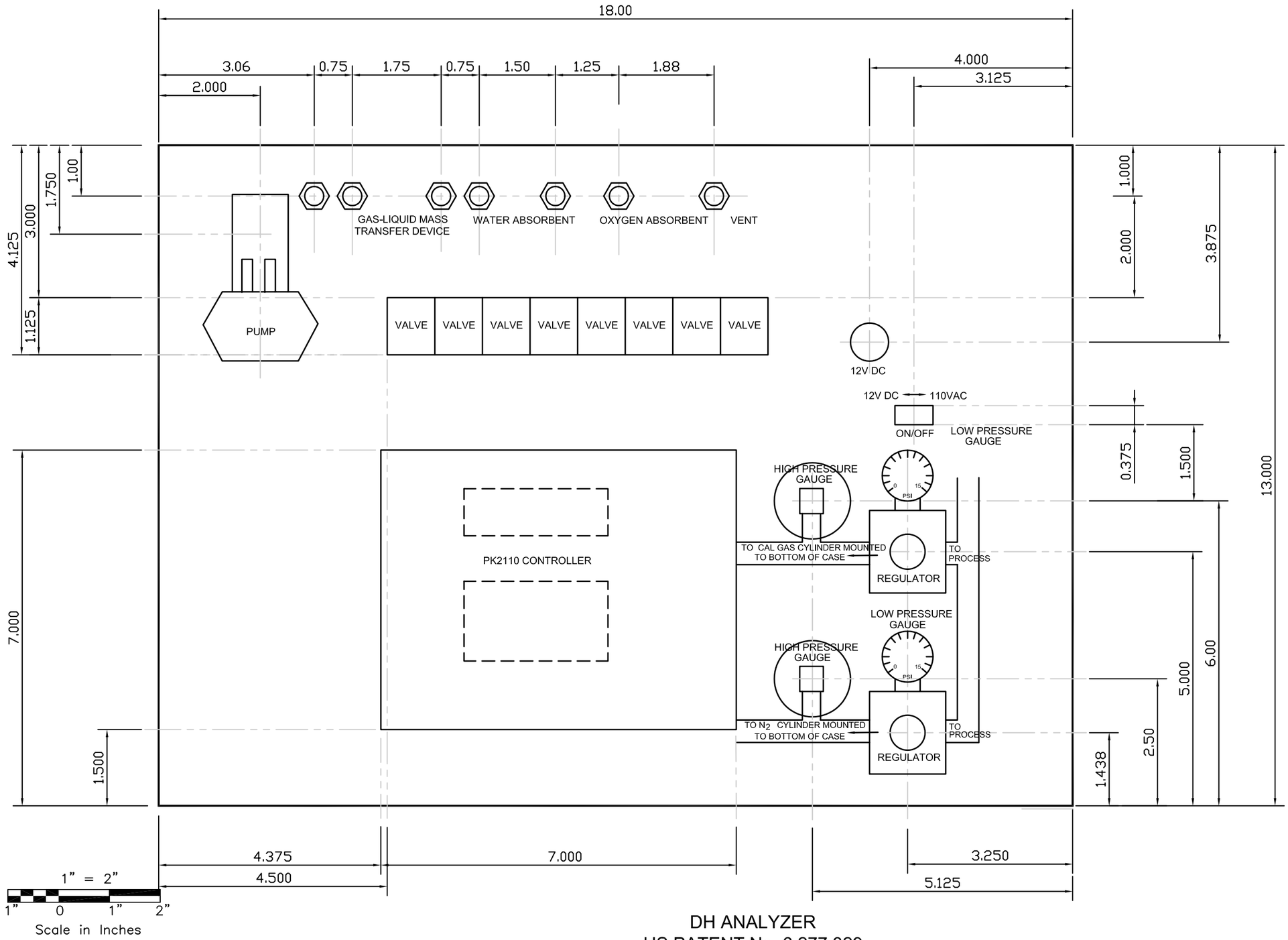

DH ANALYZER
US PATENT No. 6,277,329

Figure No. I–2
Layout – Underside of Panel

CDM

pencebs
8:43:03
04/09/04 10:12:42
proc009
P:\31212\

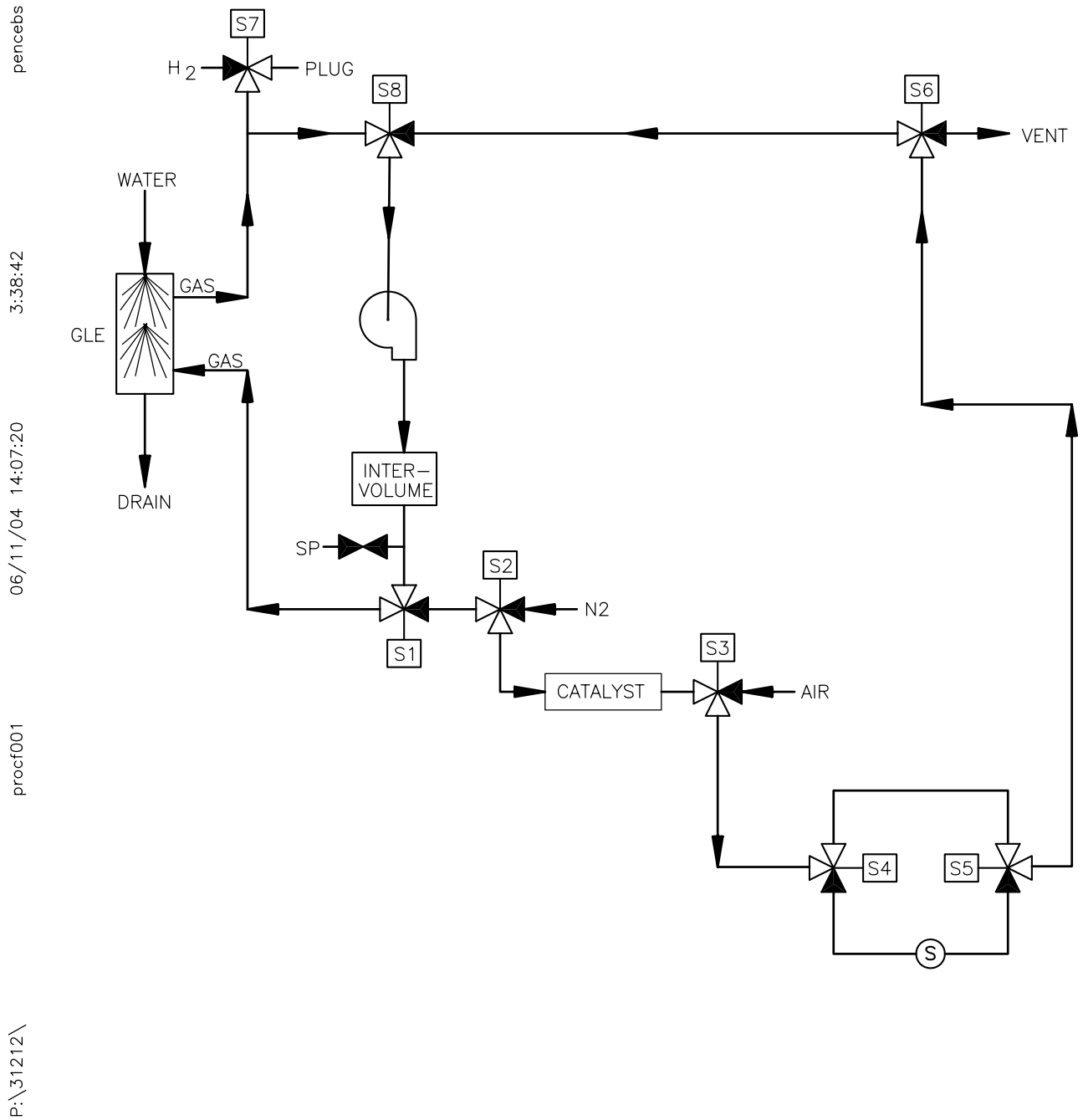

DH ANALYZER
US PATENT No. 6,277,329

Figure No. I–3
Process Flow Diagram

CDM

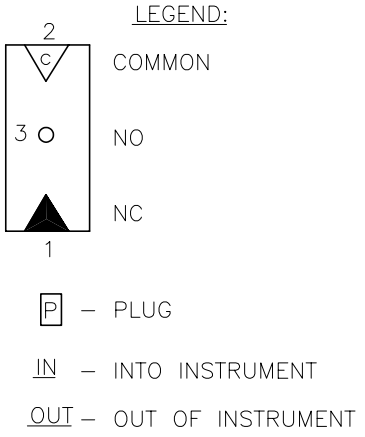

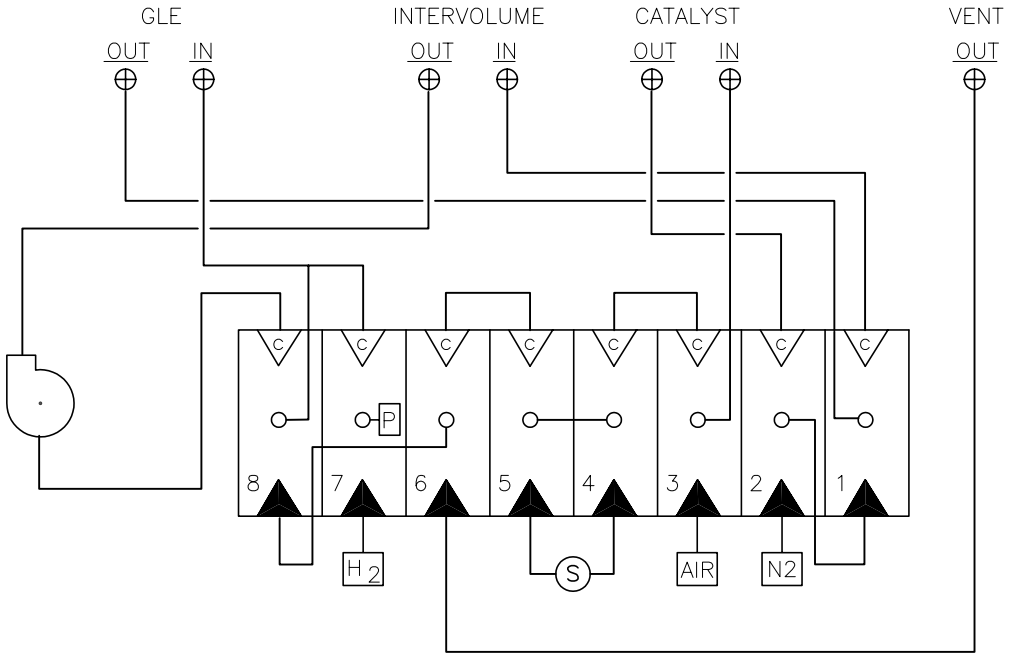

VALVE	AIR (1)	N2 (2)	CAL (3A)	GLE (3B)	CAT (4)	MEAS (5)
1	0	0	0	0	1	1
2	0	1	0	0	0	0
3	1	0	0	0	0	0
4	1	1	0	0	0	1
5	1	1	0	0	0	1
6	0	1	0	0	0	0
7	0	0	1	0	0	0
8	1	0	0	0	1	1
PUMP	1	0	1	1	1	1

DH ANALYZER
US PATENT No. 6,277,329

Figure No. I–4
Valve Connection

CDM

pencebs 4:23:56 04/09/04 12:57:09 procf002 P:\31212\

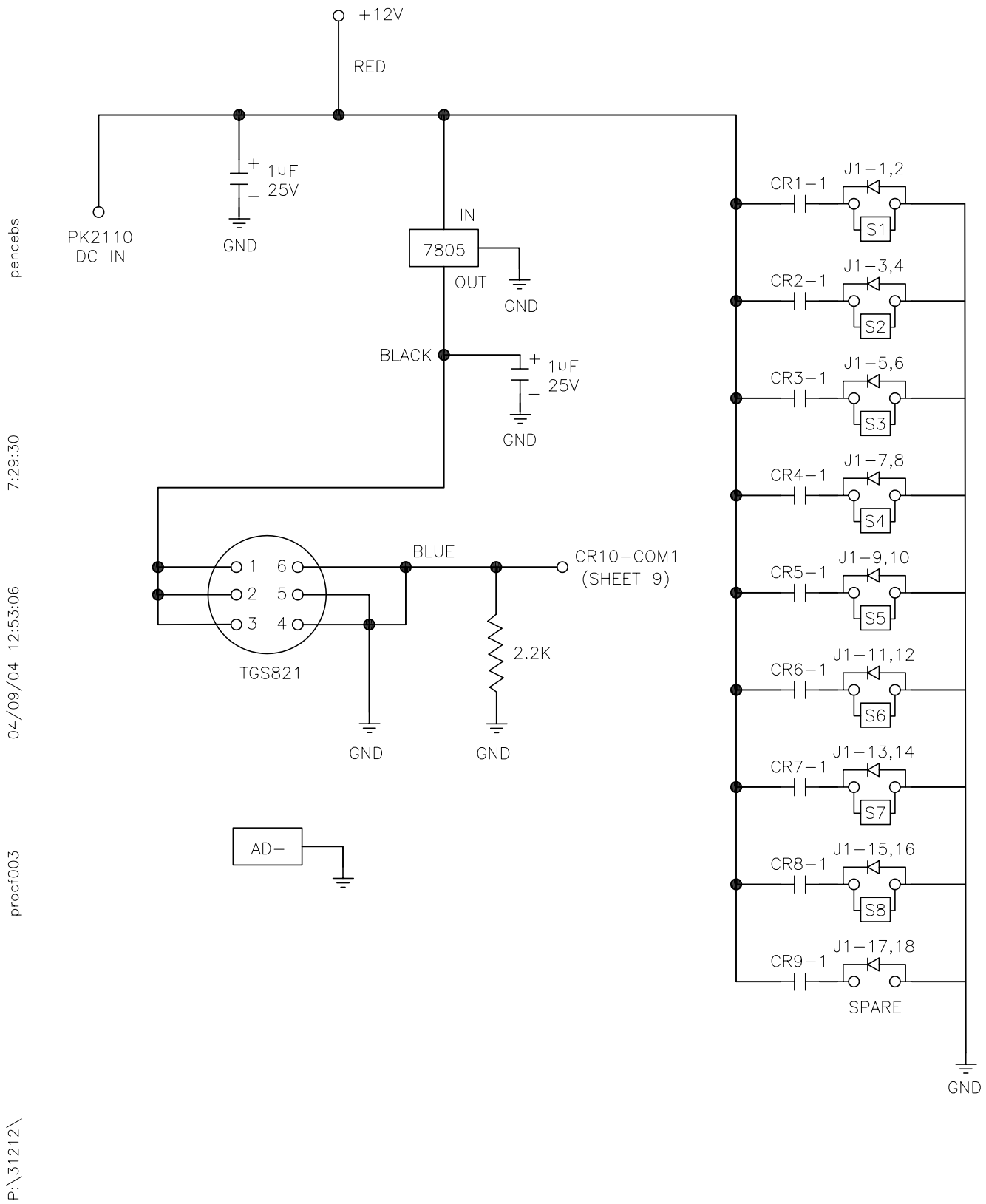

DH ANALYZER
US PATENT No. 6,277,329

Figure No. I–5
Relay Board Wiring

CDM

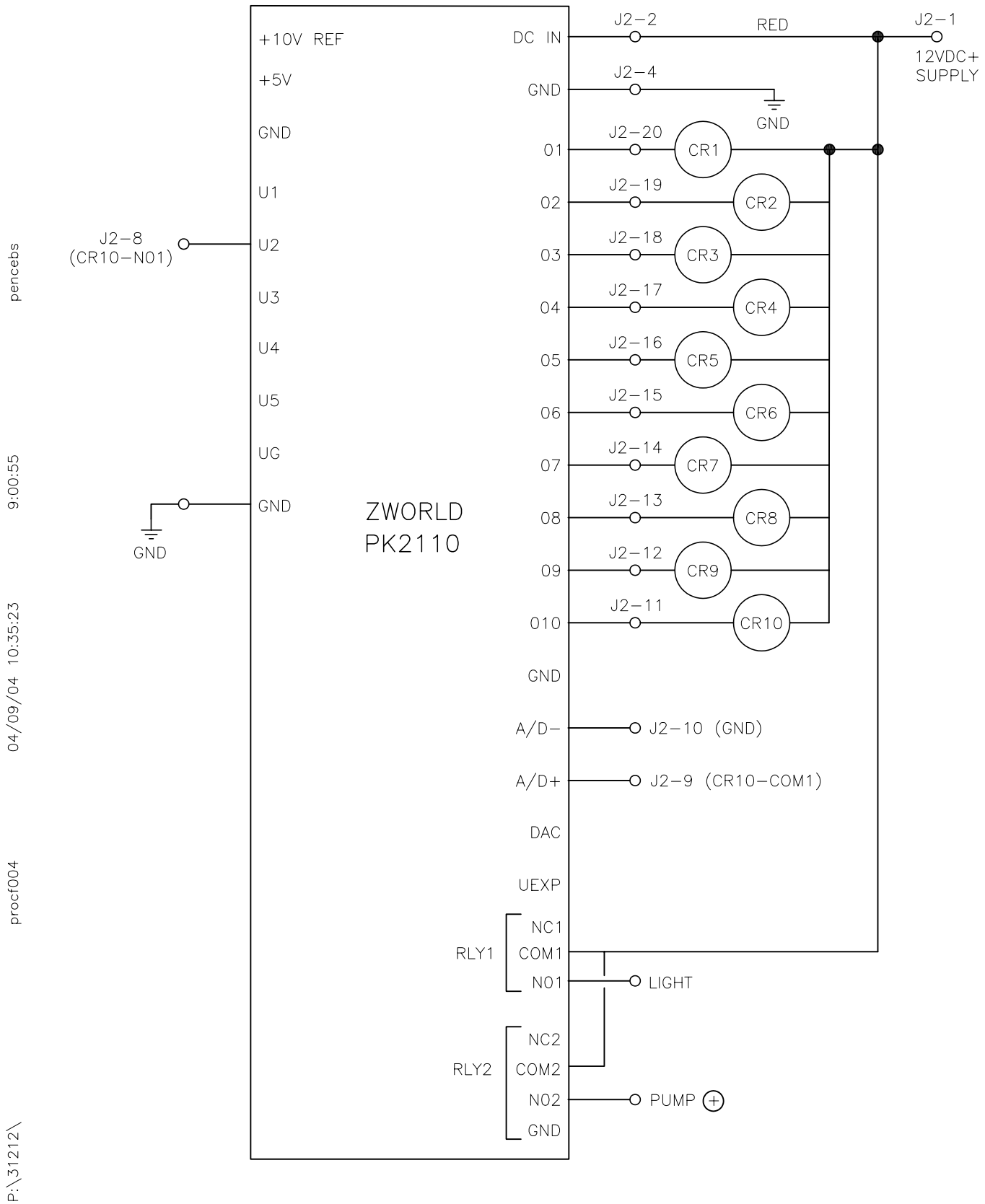

DH ANALYZER
US PATENT No. 6,277,329

Figure No. I−6
PK2110 Connections

CDM

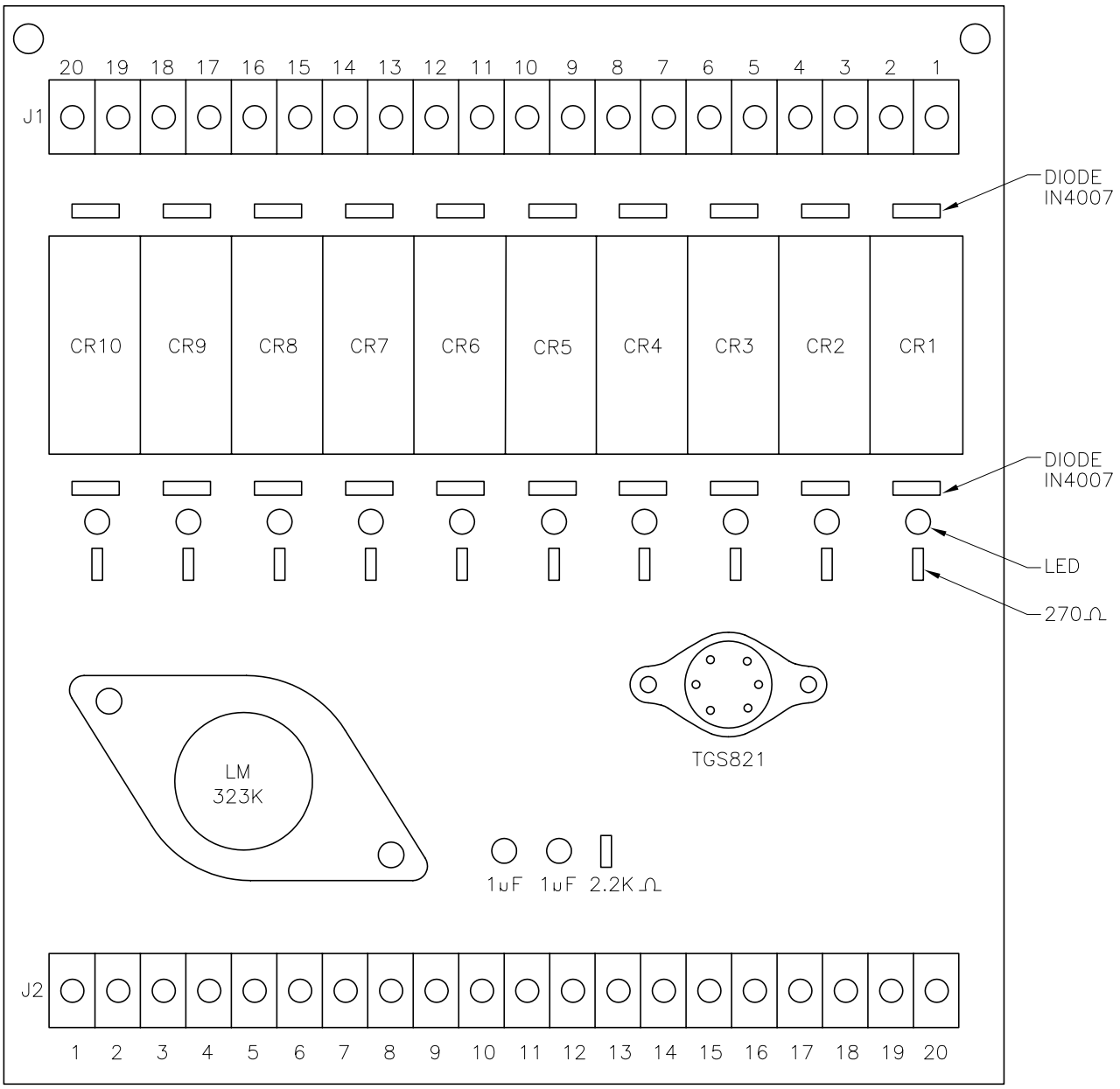

pencebs 9:16:31 04/09/04 10:28:33 procf005

P:\31212\

DH ANALYZER
US PATENT No. 6,277,329

Figure No. I–7
Relay Board Layout

CDM

CR1 TO CR9

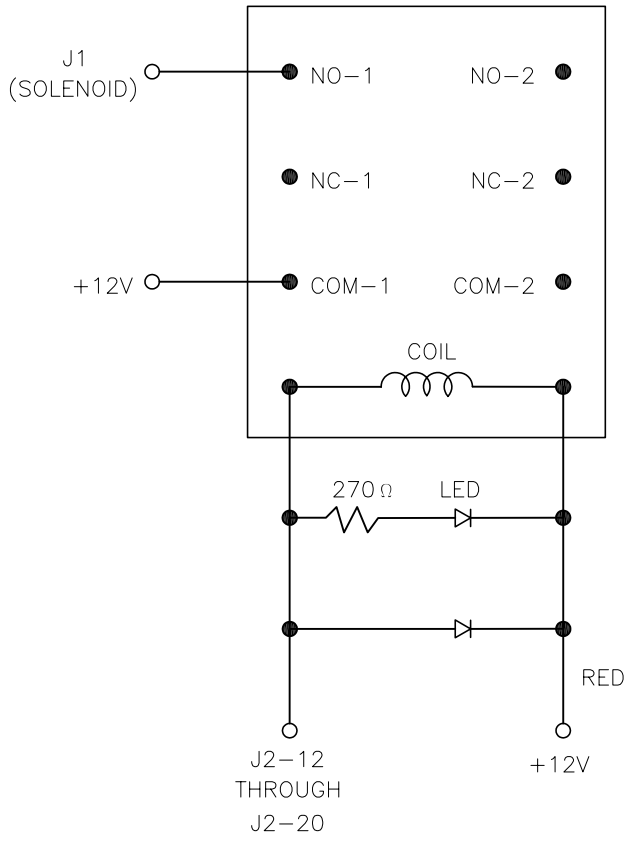

RELAY	NAIS DS2E−S−DC12V
DIODE	IN4007

pencebs 10:19:47 04/09/04 10:23:18 procf006 P:\31212\

DH ANALYZER
US PATENT No. 6,277,329

Figure No. I−8
Relay Connection (CR1−9)

CDM

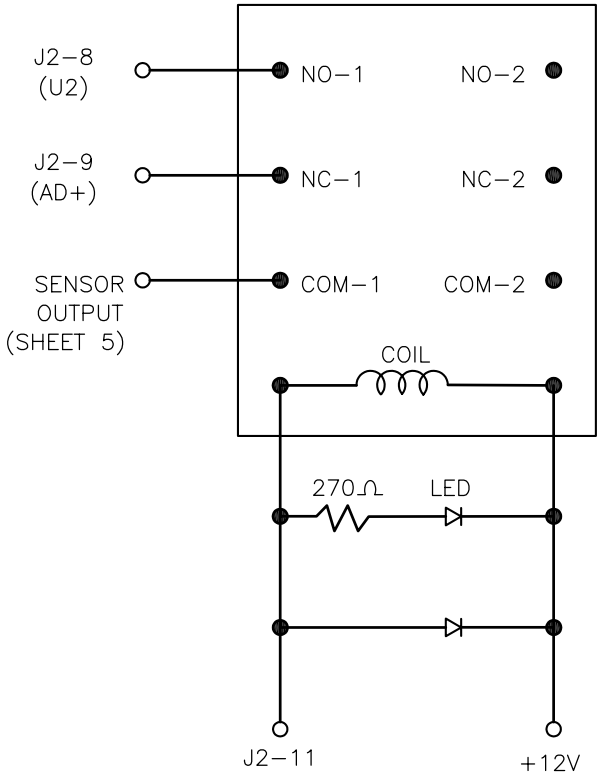

pencebs 11:13:41 06/11/04 13:51:12 procf007 P:\31212\

DH ANALYZER
US PATENT No. 6,277,329

Figure No. I-9
Relay Connection (CR10)

CDM

Appendix I - DH Analyzer Parts List
Table I-1
List of Parts for the Dissolved Hydrogen Analyzer

Item	Manufacturer	Vendor	Model No.	Quantity	Unit	Unit Cost	Cost	Description
Electrical								
Micro-Controller	Z-World	Z-World	PK2110	1	ea	$ 414.00	$ 414	12 V DC, with LCD and keypad
Subminiature Temperature Controlled Heater	Dawn Electronics		DN-515-1528	1	ea	$ 85.00	$ 85	12 V DC
Temperature Transmitter	Omega		TX93-K2	1	ea	$ 89.00	$ 89	4-20 mA output
Subminiature Thermocouple	Omega		KMTSS-125U-6	1	ea	$ 26.00	$ 26	6"
Relays	NAIS	Active Electronics	DS2E-S-DC12V	10	ea	$ 5.00	$ 50	
Connector Panel Mount	Active Electronics	Digi-Key Corporation	CP-1260-ND	1	ea	$ 0.74	$ 1	6 pin female circular pin connector
Din Connector	Active Electronics	Digi-Key Corporation	CP-1060-ND	1	ea	$ 0.56	$ 1	6 pin male circular pin connector
Power Switch	C & K		NA	1	ea	$ 5.00	$ 5	
12 V Jack and Plug		Radio Shack	NA	1	ea	$ 10.00	$ 10	
Sensor	Figaro	Figaro	TGS-821	1	ea	$ 56.30	$ 56	
332 ohm resistor		Future Active	CR08053320FTR	1	ea	$ 0.10	$ 0	
100K ohm resistor		Future Active	468-7018	3	ea	$ 0.10	$ 0	
Diode		Future Active	1N4007T	10	ea	$ 0.06	$ 1	VRRM-1000V, RMS-700
IC socket		Future Active	IC7805	1	ea	$ 2.00	$ 2	
IC socket		Future Active	IC317	1	ea	$ 3.00	$ 3	
Capacitor 1uF		Future Active	50V1-H	3	ea	$ 0.09	$ 0	50V
Bread Board		Future Active	64P44XXXP	1	ea	$ 5.05	$ 5	4.5' x 6.5' board w/ 0.042' hole
Mechanical								
Micro Air Pump	Sensidyne		C120CNSNF60VB1	1	ea	$ 137.00	$ 137	Max power=300 mA, Flow=9.5 LPM, Vac=19" Hg
3-Way Solenoid Valve	Fabco	Warden Fluid Dynamics	3853-04-838B	9	ea	$ 24.50	$ 221	Rated for 28" Hg vacuum, 12 V, 1.2 Watts/solenoid
Tubing	SMC Pneumatics		TIUBO7BU-20	1	20m	$ 24.30	$ 24	1/4-inch O.D. polyurethane, blue
Flow Control Valve	SMC Pneumatics		NAS2301F-N01-07S	2	ea	$ 10.03	$ 20	1/8-inch NPT; body ported; 1.14" x 0.98"
Fitting	SMC Pneumatics		KJU07-99	1	ea	$ 4.89	$ 5	Plug in "Y"
Fitting	Festo		QSMS-4	1	pk(10)	$ 38.40	$ 38	Bulkhead union
Fitting	Festo		QSL-1/8-4-	2	pk(10)	$ 23.10	$ 46	Male Elbow 1/8" thread size
Containers for Adsorbents	Machine Design		NA	3	ea	$ 82.50	$ 248	1-inch PVC w/PVC endcaps
Compressed gas cylinder	Swagelok	Seattle Valve & Fitting	304L-HDF4-150	2	ea	$ 74.90	$ 150	1800 psi, 500 cm^3 (150 cm3)
Regulator	GO	PCE Pacific	LG-1-1A01ACC111	2	ea	$ 230.40	$ 461	3600 psi inlet, 15 psi outlet
Pressure Gauge	ENFM	Sea-Port Controls Inc.	7217U	2	ea	$ 25.00	$ 50	1.5", 1/8" NPT, 3000 psi
Braided Hose	Swagelok	Seattle Valve & Fitting	SS-4BHT-48	1	ea	$ 48.80	$ 49	Stainless Steel Braided Hose
Aluminum Panels	Cutting Edge Laser		Dwg-X	2	ea	$ 28.66	$ 57	0.125-inch aluminum, 0.04-inch aluminum
Aluminum Panels	Cutting Edge Laser		Dwg-Y	1	ea	$ 40.59	$ 41	1/8" Alum. 5052 w/holes
Panel Coating	Ross Technologies		NA	1	ea	$ 60.00	$ 60	Polane BY10, semi-gloss black w/light texture
Silk Screening	Nu Images		NA	1	ea	$ 451.40	$ 451	
Aluminum Case	Jensen		23-003	1	ea	$ 323.20	$ 323	Aero-Lyte case w/o pallets
Clamps		McMaster-Carr	1723A22	4	ea	$ 0.63	$ 3	Zinc-plated steel, $6 screw size
Pipe strap for cylinders		McMaster-Carr	9429T18	2	ea	$ 0.28	$ 1	Zinc-plated steel
Sprayer for GLE		McMaster-Carr	32885k31	1	ea	$ 13.91	$ 14	
25mm Filter holder	Pall Gelman		4320	1	pk(6)	$ 69.90	$ 70	
Steel Clamps		Home Depot		5	ea	$ 0.68	$ 3	
GLE filter housing machined from acetal	Limited Productions, Inc			1	ea	$ 190.00	$ 190	
Threaded Hose Barb		McMaster-Carr	5228k21	1	pk (10)	$ 4.06	$ 4	
Street Tee	Swagelok	Seattle Valve & Fitting	ST-6-S7	2	ea	$ 34.60	$ 69	
Reducing Female Elbow	Swagelok	Seattle Valve & Fitting	SS-8-8-RSE-6	2	ea	$ 34.90	$ 70	
Male Elbow	Swagelok	Seattle Valve & Fitting	SS-6-ME	2	ea	$ 16.20	$ 32	
Integral Bonnet Needle Valve	Swagelok	Seattle Valve & Fitting	SS-1RS6	2	ea	$ 66.50	$ 133	
						Capital total:	**$ 4,544**	
Consumables								
Molecular Sieve	Aldrich		20,864-7	28.1	g	$ 0.05	$ 1	13X, beads, 8-12 mesh
AnaeroPack	Mitsubishi Gas Company		S3000	1	ea	$ 2.45	$ 2	Oxygen adsorbent catalyst
Carulite	Carus Chemical Co.	Carus Chemical Co.		22.4	g	$ 0.09	$ 2	carbon monoxide adsorption catalyst

Z-World PK2110 Code
CDM DH Analyzer
US Patent No. 6,277,329

```
/*
        DHRev8E.C

        PK21xx/Rugged Giant and PK22xx Program to control the dissolved H2 analyzer
        Last update: 4/26/2002
        Version Notes:
        Modification of version 8.0D
        Change step 3 time to 30 minutes (C_GLE).

*/

#use "default.h"

#use srtk.lib

#use pk21xx.lib
#use cplc.lib

#if !(BOARD_TYPE==CPLC_BOARD)
#fatal "This program only runs on a PK21xx/Rugged Giant"
#endif

//----------------------------------------
// Don't touch these values...
#define RUNKERNEL               1

#define BTN_MENU        1
#define BTN_ITEM        2
#define BTN_FIELD  3
#define BTN_UP                  4
#define BTN_DOWN        5
#define BTN_HELP        6
#define BTN_F1                  7
#define BTN_F2                  8
#define BTN_F3                  9
#define BTN_F4                  10
#define BTN_DEL         11
#define BTN_ADD         12

#define TRUE            (-1)
#define FALSE                   0
//---------------------------------------------
```

```
//-------------------------------------------
// These are the edit values...
#define REV                     8.0
#define REL                     'E'

#define UPDTRATE                200
#define iAIRPURGE               60
#define bAIRPURGE               30
#define eAIRPURGE               60

#define INITDELAY               5       //300
#define DATADELAY    1

#define MAX_HIGAIN              500
#define DELTA                           5000
#define MEASTIME                1800

// all C_* Times in seconds
#define C_N2                    30
#define C_CAT                           300
#define C_CAL                           60
#define C_GLE                           1200

#define STORE_ACT_CONC                          0
#define STORE_INIT_CF                   0
//-------------------------------------------
// type definitions

// Function prototypes
int mainMenu(int State);
float CalibInst(void);
float RunTest(float cTest);
void AirPurge(long tVal);
void N2Purge(long tVal);
void ConditionMenu(void);
void WaitForF1(void);
float GetVal(float inVal, int LCDIdx);
void SetLinearization(void);
void SetActualConc(void);

float GetH2Sens();
float PVso;
float PVsf;

// String constants
```

```
char LCD_Displays[][26] =
{
        "    DH Analyzer    \0",          //0
                "Rev %4.1f%c CDM 2002\0",          //1
                "   Sensor zeroed?   \0",          //2
                "  Sensor heat on?   \0",          //3
                "F1 to MEAS F4 to CAL\0",  //4
                "Press F1 to proceed \0",          //5
                " Press del to abort \0",          //6
                "    CAL Set Up      \0",          //7
                "F2 = Yes     F3 = No\0",          //8
                " Press. in gas cyl? \0",          //9
                " Press. in N2 cyl?  \0",          //10
                "Must have pressure! \0",          //11
                "    CAL Ready!      \0",          //12
                "   CAL Air Purge    \0",          //13
                "Time Remain %5d s\0",             //14
                "Time Elapse %5d s\0",             //15
                "Sens Rdg %7.1f mV\0",             //16
                "Temperature %6.2f\0",             //17
                "    CAL N2 Purge    \0",          //18
                "    CAL Cal. Gas    \0",          //19
                "    CAL Catalyst    \0",          //20
                "    CAL Measure     \0",          //21
                "Cal. Factor  %7.1f\0",            //22
                "     RUN Set Up     \0",          //23
                "   H2O Connected?   \0",          //24
                "Press F1 when zeroed\0",          //25
                " press del to abort \0",          //26
                "  Press F2 to zero  \0",          //27
                "Restarting program..\0",          //28
                "Check list complete?\0",          //29
                "   Calibrating...   \0",  //30
                " Gain, reset, rate  \0",//31
                "Editor      Press F1\0",          //32
                "Gain value: %5.2f\0",             //33
                "Reset value: %5.2f\0",            //34
                "Rate value: %5.2f\0",             //35
                "  Initializing...  \0",    //36
                "RTD Output : %7.2f\0",            //37
                "Sensor   :  %7.1f\0",             //38
                "Time left: %2.0f:%2.0f\0",   //39
                "     Running...    \0",   //40
                "PVf-PVs = %d\0",                          //41
                "    RUN Ready!      \0",          //42
                "   RUN Air Purge    \0",          //43
```

```
                "    RUN N2 Purge    \0",        //44
                "  RUN Equilibration \0",        //45
                "  RUN Gas Treatment \0",        //46
                "    RUN Catalyst    \0",        //47
                "    RUN Measure     \0",        //48
                "Water on?  F1 = Done\0",        //49
                "Turn off water flow \0",        //50
                "    Run complete!   \0",        //51
                "DH = %9.4f nM\0",                          //52
                " Waiting for ready \0",         //53
                "      light... \0",                        //54
                "CAL Step %d of %d\0",                      //55
                "MEAS Step %d of %d\0",                     //56
                "Ready Sensor %7.1f\0",                     //57
                "Conditioning Menu\0",                      //58
                "F1 = N2  F4 = AIR\0",                      //59
                "N2 Conditioning...\0",                     //60
                "N2 Cond.  F1 to end\0",         //61
                "Air Conditioning...\0",         //62
                "Air Cond. F1 to end\0",         //63
                " Set Linear Values\0",                     //64
                "F1 = Fact F4 = Exp\0",                     //65
                "Cur. Fact = %6.3f\0",                      //66
//              "Cur. Exp = %7.5f\0",            //67
                "Cur. Exp = %9.4f\0",            //67
                "Inc = Top, Dec = Row",                     //68
                "Press ADD to exit",                        //69
                "Set Actual Conc.\0",            //70
                "Cur. Conc = %6.3f\0",                      //71
                "Conc Below Detect\0"                       //72
};

float           glbH2Sens;
int             glbH2Disp;
int             glbRunning;
long            glbTime2Meas;
long            glbStartTime;
float           glbInpFact;
float           glbInpExp;
float           glbActConc;

int             glbCatReady;

void main()
{
```

```
/*
Declare the process variables...
*/
int     i, j;
int     lCnt, dCnt;
int     bAddCnt, bHelpCnt;
int     cnt, inKey, cSelKey;
int     stayLoop, cState;
int     whlVal, fracVal, wrStat;

int     retVal, goOn;

long    stTime;
long    endTime;

float   calFact;

/*
        Initialize the variables...
*/

cState = 0;
cnt = 0;        stayLoop = 1;
cSelKey = -1;

// Initialize the global variables...
glbH2Sens = 0;

glbRunning = FALSE;
glbH2Disp = FALSE;
glbTime2Meas = 18 * 60;

/* calFact = 16.67;     */
if (STORE_INIT_CF == 1)
{
        whlVal = 30;
        fracVal = 0;
        wrStat = ee_wr(0, whlVal);
        if (wrStat == 0)
                wrStat = ee_wr(1, fracVal);
}

whlVal = ee_rd(0);
fracVal = ee_rd(1);

if ((fracVal >= 0))
```

```
{
	calFact = (float) whlVal + (((float) fracVal) / 100);
}
else
{
	calFact = 30.0;
}

if (STORE_ACT_CONC == 1)
{
	whlVal = 11;
	fracVal = 60;
	wrStat = ee_wr(2, whlVal);
	if (wrStat == 0)
		wrStat = ee_wr(3, fracVal);
}
else
{
	whlVal = ee_rd(2);
	fracVal = ee_rd(3);
}

glbActConc = (float) whlVal + (((float) fracVal) / 100);
/*
Set the linearization factors...
*/
glbInpFact = 1.00;
glbInpExp = 1.0;

/*
Initialize the hardware...
*/

uplc_init();
//	lc_kxinit();

glbCatReady = FALSE;

// initialize the rtk...
init_srtkernel();

// Initialize the DAC calibration...
init_daccal();

cState = mainMenu(cState);
```

```
// warm up the instrument

tdelay(3000);

goOn = FALSE;
stTime = clock();
endTime = stTime + INITDELAY;

lc_pos(0,0);
lc_printf(LCD_Displays[36]);

while (clock() < endTime)
{
	// wait for 5 minutes or until up to temp...

	lc_pos(1,0);

	lc_printf(LCD_Displays[14], (endTime-clock()));

}

up_setout(11,1);

glbRunning = TRUE;

// infinite loop
while (1)
{

	// wait for correct key press and move on...
	inKey = -1;

	// Verify that checklist is completed...
	glbH2Disp = FALSE;
	lcd_erase();
	lc_pos(0,0);
	lc_printf(LCD_Displays[29]);
	lc_pos(1,0);
	lc_printf(LCD_Displays[5]);
	lc_pos(0,0);

	stayLoop = TRUE;
	inKey = -1;
	bAddCnt = 0;
	bHelpCnt = 0;
```

```
// wait for user to press appropriate keys
while (stayLoop)
{

        inKey = lc_kxget(0);
        if (inKey != -1)
                stayLoop = FALSE;

        switch (inKey)
        {

        case BTN_F1:
                // User selected "yes"... continue on...
                stayLoop = FALSE;
                break;

        case BTN_DEL:
                // Restart the device...
                inKey = 99;
                stayLoop = FALSE;
                break;

        case BTN_ADD:
                // start counting loops
                bAddCnt = bAddCnt + 1;
                if (bAddCnt > 5)
                {
                        glbH2Disp = FALSE;
                        ConditionMenu();
                        glbH2Disp = FALSE;
                        lcd_erase();
                        lc_pos(0,0);
                        lc_printf(LCD_Displays[29]);
                        lc_pos(1,0);
                        lc_printf(LCD_Displays[5]);
                        lc_pos(0,0);
                        bAddCnt = 0;
                }
                else
                        tdelay(100);

        case BTN_ITEM:
                // start counting loops
                bAddCnt = bAddCnt + 1;
                if (bAddCnt > 5)
                {
```

```
                glbH2Disp = FALSE;
                SetLinearization();
                glbH2Disp = FALSE;
                lcd_erase();
                lc_pos(0,0);
                lc_printf(LCD_Displays[29]);
                lc_pos(1,0);
                lc_printf(LCD_Displays[5]);
                lc_pos(0,0);
                bAddCnt = 0;
        }
        else
                tdelay(100);

        stayLoop = TRUE;
        inKey = -1;
        break;

case BTN_HELP:
        // start counting loops
        bAddCnt = bAddCnt + 1;
        if (bAddCnt > 5)
        {
                glbH2Disp = FALSE;
                SetActualConc();
                glbH2Disp = FALSE;
                lcd_erase();
                lc_pos(0,0);
                lc_printf(LCD_Displays[29]);
                lc_pos(1,0);
                lc_printf(LCD_Displays[5]);
                lc_pos(0,0);
                bAddCnt = 0;
        }
        else
                tdelay(100);

        stayLoop = TRUE;
        inKey = -1;
        break;

default:
        stayLoop = TRUE;
        inKey = -1;

}
```

```
}

if (inKey != 99)
{

        inKey = -1;
        dCnt = 0;

        while (inKey == -1)
        {
                // Instrument is initialized...
                // wait for the user input...
                glbH2Disp = FALSE;

                dCnt = dCnt + 1;

                if (fmod(dCnt, UPDTRATE)<3)
                {
                        lcd_erase();
                        lc_pos(0,0);
                        lc_printf(LCD_Displays[57], glbH2Sens);
                        lc_pos(1,0);
                        lc_printf(LCD_Displays[4]);
                }

                if (dCnt > 10000)
                        dCnt = 0;

                stayLoop = TRUE;
                lCnt = 0;

                while (stayLoop)
                {

                        inKey = lc_kxget(0);
                        if (inKey != -1)
                                stayLoop = FALSE;

                        if (fmod(lCnt, UPDTRATE) < 5)
                        {
                                lcd_erase_line(0);
                                lc_pos(0,0);
                                //glbH2Sens = GetH2Sens();
                                //glbH2Sens = up_adcal(2);
                                lc_printf(LCD_Displays[57], glbH2Sens);
```

```
                                        }

                                        lCnt += 1;

                                        if (lCnt > 10000)
                                                lCnt = 0;

                                        switch (inKey)
                                        {
                                        case    BTN_MENU:           // menu key
                                                cState = mainMenu(cState);
                                                break;
                                        case    BTN_F4:                 // F4 - Calibrate
                                                glbH2Disp = TRUE;

                                                calFact = CalibInst();
                                                whlVal = floor(calFact);
                                                fracVal = floor((calFact - whlVal)*100);

                                                wrStat = ee_wr(0, whlVal);
                                                if (wrStat == 0)
                                                        wrStat = ee_wr(1, fracVal);


                                                stayLoop = FALSE;

                                                break;
                                        case BTN_F1:            // F1 - Run
                                                glbH2Disp = TRUE;

                                                RunTest(calFact);
                                                stayLoop = FALSE;

                                                break;

                                        }

                                        lc_pos(0,0);

                                }
                        }
                }

        }
}
```

```
srtk_lowtask()
{
	long eTime, dispTime;
	static	tCnt;

	if (glbRunning)
	{
		//up_daccal(glbHeatOut);

		glbH2Sens = GetH2Sens();

		if (fmod(tCnt, UPDTRATE/20) < 3)
		{
			if (glbH2Disp)
			{
				//glbH2Sens = GetH2Sens();
				lcd_erase_line(1);
				lc_pos(1,0);
				lc_printf(LCD_Displays[38], glbH2Sens);
			}
		}

		tCnt = tCnt + 1;

		if ((tCnt > 1000) || (tCnt < 1))
			tCnt = 1;

	}

}

float GetH2Sens()
{
	static int passCnt;
	// Retrieve the correct H2 sensor value...
	// if AD+/- <= 0, read that value in...
	// if not activate relay and read value from U2...
	static float H2val;

	if (H2val < MAX_HIGAIN)
	{
		// trigger the relay...
		up_setout(10, 0);
		H2val = up_higain(2) * 1000;

		passCnt = 1;
```

```
	}
	else
	{

		// activate relay...
		up_setout(10, 1);

		if (passCnt < 4)
			passCnt += 1;
		else
			H2val = up_adcal(2);

	}

	return (H2val);
}

void ConditionMenu()
{

	int	inKey;
	double tmpSetPt;

	lcd_erase();

	lc_pos(0,0);
	lc_printf(LCD_Displays[58]);
	lc_pos(1,0);
	lc_printf(LCD_Displays[59]);

	inKey = -1;

	while (inKey == -1)
	{

		inKey = lc_kxget(0);

		switch (inKey)
		{

		case BTN_F1:
			// User selected N2 purge...
			glbH2Disp = TRUE;

			lcd_erase_line(1);
```

```
                        lc_pos(0,0);
                        lc_printf(LCD_Displays[60]);
                        N2Purge(30);
                        lcd_erase_line(1);
                        lc_pos(0,0);
                        lc_printf(LCD_Displays[61]);
                        WaitForF1();
                        //inKey = -1;

                        glbH2Disp = FALSE;

                        break;

                case BTN_F4:
                        // User selected N2 purge...
                        glbH2Disp = TRUE;
                        lcd_erase_line(1);
                        lc_pos(0,0);
                        lc_printf(LCD_Displays[62]);
                        AirPurge(30);
                        lcd_erase_line(1);
                        lc_pos(0,0);
                        lc_printf(LCD_Displays[63]);
                        WaitForF1();
                        //inKey = -1;

                        glbH2Disp = FALSE;

                        break;

                case BTN_DEL:
                        // Restart the device...
                        inKey = 99;
                        break;

                default:
                        inKey = -1;
                }
        }
}

void SetLinearization()
{

        int     inKey;
```

```
lcd_erase();

lc_pos(0,0);
lc_printf(LCD_Displays[64]);
lc_pos(1,0);
lc_printf(LCD_Displays[65]);

inKey = -1;

while (inKey == -1)
{

	inKey = lc_kxget(0);

	switch (inKey)
	{

	case BTN_F1:
		// User selected to edit multiplier factor...
		glbH2Disp = FALSE;

		lcd_erase();
		lc_pos(0,0);
		lc_printf(LCD_Displays[66], glbInpFact);

		glbInpFact = GetVal(glbInpFact, 66);

		break;

	case BTN_F4:
		// User selected to edit exponent value...
		glbH2Disp = FALSE;
		lcd_erase();
		lc_pos(0,0);
		lc_printf(LCD_Displays[67], glbInpExp);

		glbInpExp = GetVal(glbInpExp, 67);
		glbH2Disp = FALSE;

		break;

	case BTN_DEL:
		// Restart the device...
		inKey = 99;
		break;
```

```
		default:
			inKey = -1;
		}
	}
}

void SetActualConc()
{

	int	inKey;
	int	whlVal;
	int	fracVal;
	int	wrStat;

	lcd_erase();

	lc_pos(0,0);
	lc_printf(LCD_Displays[70]);
	lc_pos(1,0);
	lc_printf(LCD_Displays[5]);

	inKey = -1;

	while (inKey == -1)
	{

		inKey = lc_kxget(0);

		switch (inKey)
		{

		case BTN_F1:
			// User selected to edit actual concentration of the standard...
			glbH2Disp = FALSE;

			lcd_erase();
			lc_pos(0,0);
			lc_printf(LCD_Displays[71], glbActConc);

			glbActConc = GetVal(glbActConc, 71);

			// write the values back out to EEPROM...

			whlVal = floor(glbActConc);
			fracVal = floor((glbActConc - (float) whlVal) * 100);
```

```
                        wrStat = ee_wr(2, whlVal);
                        if (wrStat == 0)
                                wrStat = ee_wr(3, fracVal);


                        break;


                case BTN_DEL:
                        // Restart the device...
                        inKey = 99;
                        break;

                default:
                        inKey = -1;
                }
        }
}

float GetVal(float inVal, int LCDIdx)
{

        int keepOn;
        int inKey;

        keepOn = -1;

        lc_pos(1,0);
        lc_printf(LCD_Displays[69]);

        tdelay(2000);

        lc_pos(1,0);
        lc_printf(LCD_Displays[68]);

        while (keepOn == -1)
        {
                inKey = lc_kxget(0);

                if (inKey == BTN_ADD)
                {
                        // we're done...
                        keepOn = 1;

                }
                else
```

```
		{
			switch (inKey)
			{
				case BTN_MENU:
					inVal = inVal + 1;
					break;
				case BTN_F1:
					inVal = inVal - 1;
					break;
				case BTN_ITEM:
					inVal = inVal + .1;
					break;
				case BTN_F2:
					inVal = inVal - .1;
					break;
				case BTN_FIELD:
					inVal = inVal + .01;
					break;
				case BTN_F3:
					inVal = inVal - .01;
					break;
				case BTN_UP:
					inVal = inVal + .001;
					break;
				case BTN_F4:
					inVal = inVal - .001;
					break;
				case BTN_DOWN:
					inVal = inVal + .0001;
					break;
				case BTN_DEL:
					inVal = inVal - .0001;
					break;
			}

			lc_pos(0,0);
			lc_printf(LCD_Displays[LCDIdx], inVal);
		}

	}

	return(inVal);
}

void WaitForF1(void)
{
```

```
	int inKey;

	inKey = -1;

	while (inKey == -1)
	{
		inKey = lc_kxget(0);

		if (inKey == BTN_F1 || inKey == BTN_DEL)
		{
			// do nutn
		}
		else
			inKey = -1;
	}
}

int mainMenu(int State)
{


	lcd_erase();

	lc_pos(0, 0);
	lc_printf(LCD_Displays[0], "  ");
	lc_pos(1, 0);
	lc_printf(LCD_Displays[1], REV, REL);

	lc_pos(0,0);

	return(0);
}


float CalibInst()
{

	int	bCont;

	double lPIDout;
	long	stTime;
	long	endTime;
	long	PVso;
	long	PVsf;
	float	calFact;
	float m;
```

```
long    tmpSetPt;
int     iLoop;
int     iKey;
int     inKey;

int lCnt;
//init_timer1(600);

bCont = TRUE;
glbH2Disp = TRUE;

lcd_erase();

lc_pos(0,0);
lc_printf(LCD_Displays[55], 1, 5);

// Air purge phase...

// turn relay 2 on via relay output #12...
up_setout(12, 1);

// turn on the appropriate valve functions...
up_setout(1, 0);
up_setout(2, 0);
up_setout(3, 1);
up_setout(4, 1);
up_setout(5, 1);
up_setout(6, 0);
up_setout(7, 0);
up_setout(8, 1);
up_setout(9, 0);
//up_setout(10, 0);


stTime = clock();
endTime = stTime + bAIRPURGE;

bCont = TRUE;

while (bCont)
{
        if (stTime > endTime)
                bCont = FALSE;

        stTime = clock();
```

```
        inKey = lc_kxget(0);
        if (inKey == BTN_DEL)
                bCont = FALSE;
}

up_setout(12, 0);
up_setout(1, 0);
up_setout(2, 0);
up_setout(3, 0);
up_setout(4, 0);
up_setout(5, 0);
up_setout(6, 0);
up_setout(7, 0);
up_setout(8, 0);
up_setout(9, 0);


bCont = TRUE;

while (bCont)

{
        PVso = GetH2Sens();//up_adcal(2);
        //if (PVso < 100)
                bCont = FALSE;

        inKey = lc_kxget(0);
        if (inKey == BTN_DEL)
                bCont = FALSE;
}

// Nitrogen purge...
lcd_erase_line(1);
lc_pos(0,0);
lc_printf(LCD_Displays[55], 2, 5);

//tmpSetPt = glbPID.SetPoint;
//glbPID.SetPoint = 75;

// set the valving...
// turn relay 2 off via relay output #12...
up_setout(12, 0);

// turn on the appropriate valve functions...
up_setout(1, 0);
up_setout(2, 1);
```

```
up_setout(3, 0);
up_setout(4, 1);
up_setout(5, 1);
up_setout(6, 1);
up_setout(7, 0);
up_setout(8, 0);
up_setout(9, 0);
//up_setout(10, 0);


stTime = clock();
endTime = stTime + C_N2;

bCont = TRUE;

while (bCont)
{
	if (stTime > endTime)
		bCont = FALSE;

	stTime = clock();

	inKey = lc_kxget(0);
	if (inKey == BTN_DEL)
		bCont = FALSE;
}

// Calibration gas...
lcd_erase_line(1);
lc_pos(0,0);
lc_printf(LCD_Displays[55], 3, 5);

// set the valving...
// turn relay 2 off via relay output #12...
up_setout(12, 1);

// turn on the appropriate valve functions...
up_setout(1, 0);
up_setout(2, 0);
up_setout(3, 0);
up_setout(4, 0);
up_setout(5, 0);
up_setout(6, 0);
up_setout(7, 1);
up_setout(8, 0);
up_setout(9, 0);
```

```
//up_setout(10, 0);

stTime = clock();
endTime = stTime + C_CAL;

bCont = TRUE;

while (bCont)
{
	if (stTime > endTime)
		bCont = FALSE;

	stTime = clock();

	inKey = lc_kxget(0);
	if (inKey == BTN_DEL)
		bCont = FALSE;
	if (inKey == BTN_MENU)
		endTime = endTime + 1000;
}

// Catalyst phase...
lcd_erase_line(1);
lc_pos(0,0);
lc_printf(LCD_Displays[55], 4, 5);

// turn relay 2 on via relay output #12...
up_setout(12, 1);

// turn on the appropriate valve functions...
up_setout(1, 1);
up_setout(2, 0);
up_setout(3, 0);
up_setout(4, 0);
up_setout(5, 0);
up_setout(6, 0);
up_setout(7, 0);
up_setout(8, 1);
up_setout(9, 0);
//up_setout(10, 0);

stTime = clock();

endTime = stTime + C_CAT;

lCnt = 0;
```

```
bCont = TRUE;

while (bCont)
{
	stTime = clock();

	if (stTime > endTime)
		bCont = FALSE;

	stTime = clock();

	inKey = lc_kxget(0);
	if (inKey == BTN_DEL)
	{
		//glbPID.SetPoint = tmpSetPt;
		bCont = FALSE;
	}
	if (inKey == BTN_MENU)
		endTime = endTime + 1000;
}

// Measure phase...
lcd_erase_line(1);
lc_pos(0,0);
lc_printf(LCD_Displays[55], 5, 5);

// turn relay 2 on via relay output #12...
up_setout(12, 1);

// turn on the appropriate valve functions...
up_setout(1, 1);
up_setout(2, 0);
up_setout(3, 0);
up_setout(4, 1);
up_setout(5, 1);
up_setout(6, 0);
up_setout(7, 0);
up_setout(8, 1);
up_setout(9, 0);
//up_setout(10, 0);

stTime = clock();
endTime = stTime + DATADELAY;

bCont = TRUE;
```

```
        PVso = GetH2Sens();//up_adcal(2);

        while (bCont)
        {
                if (stTime > endTime)
                        bCont = FALSE;

//      PVsf = GetH2Sens();
//                      if (PVsf < PVso)
//                      bCont = FALSE;

                stTime = clock();

                inKey = lc_kxget(0);
                if (inKey == BTN_DEL)
                        bCont = FALSE;
        }

        PVso = GetH2Sens();//up_adcal(2);

        bCont = TRUE;
        PVsf = GetH2Sens();//up_adcal(2);//PVso;
        stTime = clock();
        endTime = stTime + MEASTIME;
        lCnt = 0;

        while (bCont)
        {
        stTime = clock();
                PVsf = GetH2Sens();//up_adcal(2);

                if (stTime > endTime)
                        bCont = FALSE;

                stTime = clock();

                lCnt += 1;

                PVsf = GetH2Sens();//up_adcal(2);

                inKey = lc_kxget(0);
                if (inKey == BTN_DEL)
                        bCont = FALSE;
        }

        calFact = ((float) (PVsf - PVso));
```

```
//	calFact = ((float) (PVsf - PVso))/((float) endTime)/((float) glbInpFact * PVso +
glbInpExp);

	glbH2Disp = FALSE;
	lcd_erase();

	lc_pos(0,0);
	lc_printf(LCD_Displays[12]);
	lc_pos(1,0);
	lc_printf(LCD_Displays[22], calFact);

	// turn relay 2 on via relay output #12...
	up_setout(12, 0);

	// turn on the appropriate valve functions...
	up_setout(1, 0);
	up_setout(2, 0);
	up_setout(3, 0);
	up_setout(4, 0);
	up_setout(5, 0);
	up_setout(6, 0);
	up_setout(7, 0);
	up_setout(8, 0);
	up_setout(9, 0);
	//up_setout(10, 0);

	AirPurge(eAIRPURGE);
//	N2Purge(60);

	lcd_erase();

	lc_pos(0,0);
	lc_printf(LCD_Displays[22], calFact);
	lc_pos(1,0);
	lc_printf(LCD_Displays[5]);

	iLoop = -1;

	while (iLoop)
	{

		iKey = lc_kxget(0);
		if (iKey != -1)
		{
			if ((iKey == BTN_F1) || (iKey == BTN_DEL))
			{
```

```
                                iLoop = 0;
                        }
                }



        }

        glbH2Disp = TRUE;

        return(calFact);

}

float RunTest(float cFact)
{
        // run the actual test...
        int     bCont;
        int     iLoop;
        int     iKey;
        int     inKey;

        double lPIDout;
        long    stTime;
        long    endTime;
        long    elapseTime;
        long    PVso;
        long    PVsf;
        float   calcH2;
        float calcH2L;
        float m;
        long    tmpSetPt;

        int lCnt;
        //init_timer1(600);

        bCont = TRUE;

        lcd_erase();
        lc_pos(0,0);
        lc_printf(LCD_Displays[49]);

        iLoop = TRUE;

        while (iLoop)
        {
```

```
		iKey = lc_kxget(0);
		if (iKey != -1)
		{
			if ((iKey == BTN_F1) || (iKey == BTN_DEL))
			{
				iLoop = FALSE;
			}
		}

	}

	lcd_erase();

	lc_pos(0,0);
	lc_printf(LCD_Displays[56], 1, 5);

	// Air purge phase...
	// turn relay 2 on via relay output #12...
	up_setout(12, 1);

	// turn on the appropriate valve functions...
	up_setout(1, 0);
	up_setout(2, 0);
	up_setout(3, 1);
	up_setout(4, 1);
	up_setout(5, 1);
	up_setout(6, 0);
	up_setout(7, 0);
	up_setout(8, 1);
	up_setout(9, 0);
	//up_setout(10, 0);

	glbTime2Meas = clock() +  1080;

	stTime = clock();
	endTime = stTime + bAIRPURGE;

	bCont = TRUE;

	while (bCont)
	{
		if (stTime > endTime)
			bCont = FALSE;

		stTime = clock();
```

```
		inKey = lc_kxget(0);
		if (inKey == BTN_DEL)
			bCont = FALSE;
}

// Nitrogen purge...

lcd_erase_line(0);
lc_pos(0,0);
lc_printf(LCD_Displays[56], 2, 5);

// set the valving...
// turn relay 2 off via relay output #12...
up_setout(12, 0);

// turn on the appropriate valve functions...
up_setout(1, 0);
up_setout(2, 1);
up_setout(3, 0);
up_setout(4, 1);
up_setout(5, 1);
up_setout(6, 1);
up_setout(7, 0);
up_setout(8, 0);
up_setout(9, 0);
//up_setout(10, 0);


stTime = clock();
endTime = stTime + C_N2;

bCont = TRUE;

while (bCont)
{
		if (stTime > endTime)
			bCont = FALSE;

		stTime = clock();

		inKey = lc_kxget(0);
		if (inKey == BTN_DEL)
			bCont = FALSE;
}
```

```
// Gas-liquid equilibration phase...
lcd_erase_line(0);
lc_pos(0,0);
lc_printf(LCD_Displays[56], 3, 5);

// set the valving...
// turn relay 2 on via relay output #12...
up_setout(12, 1);

// turn on the appropriate valve functions...
up_setout(1, 0);
up_setout(2, 0);
up_setout(3, 0);
up_setout(4, 0);
up_setout(5, 0);
up_setout(6, 0);
up_setout(7, 0);
up_setout(8, 0);
up_setout(9, 0);
//up_setout(10, 0);

stTime = clock();
endTime = stTime + C_GLE;


bCont = TRUE;

while (bCont)
{
	if (stTime > endTime)
		bCont = FALSE;

	stTime = clock();

	inKey = lc_kxget(0);
	if (inKey == BTN_DEL)
		bCont = FALSE;

	if (inKey == BTN_MENU)
		endTime = endTime + 300;
}

// Gas treatment phase...

lcd_erase_line(0);
```

```
lc_pos(0,0);
lc_printf(LCD_Displays[56], 4, 5);

// set the valving...
// turn relay 2 on via relay output #12...
up_setout(12, 1);

// turn on the appropriate valve functions...
up_setout(1, 1);
up_setout(2, 0);
up_setout(3, 0);
up_setout(4, 0);
up_setout(5, 0);
up_setout(6, 0);
up_setout(7, 0);
up_setout(8, 1);
up_setout(9, 0);
//up_setout(10, 0);

stTime = clock();
endTime = stTime + C_CAT;

bCont = TRUE;

while (bCont)
{
	if (stTime > endTime)
		bCont = FALSE;

	stTime = clock();

	inKey = lc_kxget(0);
	if (inKey == BTN_DEL)
		bCont = FALSE;
}

// Measure phase...
lcd_erase_line(0);
lc_pos(0,0);
lc_printf(LCD_Displays[56], 5, 5);

// turn relay 2 on via relay output #12...
up_setout(12, 1);

// turn on the appropriate valve functions...
up_setout(1, 1);
```

```
        up_setout(2, 0);
        up_setout(3, 0);
        up_setout(4, 1);
        up_setout(5, 1);
        up_setout(6, 0);
        up_setout(7, 0);
        up_setout(8, 1);
        up_setout(9, 0);
        //up_setout(10, 0);

        stTime = clock();
        endTime = stTime + DATADELAY;

        bCont = TRUE;
        PVso = GetH2Sens();
        while (bCont)
        {
                if (stTime > endTime)
                        bCont = FALSE;
//              PVsf = GetH2Sens();
//              if (PVsf < PVso);
//                      bCont = FALSE;

                stTime = clock();

                inKey = lc_kxget(0);
                if (inKey == BTN_DEL)
                        bCont = FALSE;
        }

        PVso = GetH2Sens();//up_adcal(2);

        bCont = TRUE;
        PVsf = GetH2Sens();//up_adcal(2);//PVso;
        stTime = clock();
        endTime = stTime + MEASTIME;

        lCnt = 0;
        bCont = TRUE;

        while (bCont)
        {
                stTime = clock();
                PVsf = GetH2Sens();//up_adcal(2);

                if (stTime > endTime)
```

```
                bCont = FALSE;

            stTime = clock();

            inKey = lc_kxget(0);
            if (inKey == BTN_DEL)
                bCont = FALSE;
        }

        if (cFact != 0)
            calcH2 = 0.8 * (glbActConc/cFact) * ((float) (PVsf - PVso));
        else
            calcH2 = 0.8 * (glbActConc/30.0) * ((float) (PVsf - PVso));

        if (calcH2 < 0)
            calcH2L = 0;
        else
            calcH2L = glbInpFact * pow(calcH2, glbInpExp);
//          calcH2L = calcH2 / ((float) glbInpFact * PVso + glbInpExp);


        glbH2Disp = FALSE;

        lcd_erase();

        lc_pos(0,0);
        lc_printf(LCD_Displays[51]);
        lc_pos(1,0);
        if (calcH2L == 0)
            lc_printf(LCD_Displays[72]);
        else
            lc_printf(LCD_Displays[52], calcH2L);

        // turn relay 2 on via relay output #12...
        up_setout(12, 0);

        // turn on the appropriate valve functions...
        up_setout(1, 0);
        up_setout(2, 0);
        up_setout(3, 0);
        up_setout(4, 0);
        up_setout(5, 0);
        up_setout(6, 0);
        up_setout(7, 0);
        up_setout(8, 0);
        up_setout(9, 0);
```

```
	//up_setout(10, 0);

	AirPurge(eAIRPURGE);
	// N2Purge(60);

	lcd_erase();

	lc_pos(0,0);
	if (calcH2L == 0)
		lc_printf(LCD_Displays[72]);
	else
		lc_printf(LCD_Displays[52], calcH2L);

	lc_pos(1,0);
	lc_printf(LCD_Displays[5]);

	iLoop = -1;

	while (iLoop)
	{

		iKey = lc_kxget(0);
		if (iKey != -1)
		{
			if ((iKey == BTN_F1) || (iKey == BTN_DEL))
			{
				iLoop = 0;
			}
			else
			{
				if (iKey == BTN_MENU)
				{
					lcd_erase();
					lc_pos(0,0);
					lc_printf(LCD_Displays[22], cFact);
					lc_pos(1,0);
					lc_printf(LCD_Displays[5]);
				}
			}
		}

	}

	return(calcH2L);

}
```

```
void AirPurge(long tVal)
{

	long	stTime, endTime;

	// Air purge phase...
	// turn relay 2 on via relay output #12...
	up_setout(12, 1);

	// turn on the appropriate valve functions...
	up_setout(1, 0);
	up_setout(2, 0);
	up_setout(3, 1);
	up_setout(4, 1);
	up_setout(5, 1);
	up_setout(6, 0);
	up_setout(7, 0);
	up_setout(8, 1);
	up_setout(9, 0);
	//up_setout(10, 0);

	stTime = clock();
	endTime = stTime + tVal;

	while (stTime < endTime)
	{
		stTime = clock();
	}
	// turn relay 2 on via relay output #12...
	up_setout(12, 0);

	// turn on the appropriate valve functions...
	up_setout(1, 0);
	up_setout(2, 0);
	up_setout(3, 0);
	up_setout(4, 0);
	up_setout(5, 0);
	up_setout(6, 0);
	up_setout(7, 0);
	up_setout(8, 0);
	up_setout(9, 0);
	//up_setout(10, 0);
}

void N2Purge(long tVal)
```

```
{

        long    stTime, endTime;
        int     bCont;

        // set the valving...
        // turn relay 2 off via relay output #12...
        up_setout(12, 0);

        // turn on the appropriate valve functions...
        up_setout(1, 0);
        up_setout(2, 1);
        up_setout(3, 0);
        up_setout(4, 1);
        up_setout(5, 1);
        up_setout(6, 1);
        up_setout(7, 0);
        up_setout(8, 0);
        up_setout(9, 0);
        //up_setout(10, 0);


        stTime = clock();
        endTime = stTime + tVal;

        bCont = TRUE;

        while (bCont)
        {
                if (stTime > endTime)
                        bCont = FALSE;

                stTime = clock();

        }
        // turn relay 2 on via relay output #12...
        up_setout(12, 0);

        // turn on the appropriate valve functions...
        up_setout(1, 0);
        up_setout(2, 0);
        up_setout(3, 0);
        up_setout(4, 0);
        up_setout(5, 0);
        up_setout(6, 0);
        up_setout(7, 0);
```

```
        up_setout(8, 0);
        up_setout(9, 0);
        //up_setout(10, 0);
}
```

US006277329B1

(12) **United States Patent**
Evans

(10) **Patent No.: US 6,277,329 B1**
(45) **Date of Patent: Aug. 21, 2001**

(54) **DISSOLVED HYDROGEN ANALYZER**

(75) Inventor: **Patrick J. Evans**, Seattle, WA (US)

(73) Assignee: **Camp Dresser & McKee Inc.**, Cambridge, MA (US)

(*) Notice: Subject to any disclaimer, the term of this patent is extended or adjusted under 35 U.S.C. 154(b) by 0 days.

(21) Appl. No.: **09/273,958**

(22) Filed: **Mar. 22, 1999**

(51) **Int. Cl.**[7] **B32B 27/04**; B32B 27/12; B32B 5/02; G01N 33/18; G01N 1/22

(52) **U.S. Cl.** **422/80**; 422/94; 422/98; 422/88; 73/19.1; 73/19.12

(58) **Field of Search** 422/80, 94, 98, 422/88; 73/31.07, 19.1, 19.12

(56) **References Cited**

U.S. PATENT DOCUMENTS

3,661,010		5/1972	Neuwelt .	
3,920,396		11/1975	Schuy .	
3,922,904	*	12/1975	Williams et al.	73/19
4,111,036	*	9/1978	Frechette et al.	73/23
4,236,404		12/1980	Ketchum et al. .	
4,344,918	*	8/1982	Takahashi	422/80
4,916,079		4/1990	Baillie et al. .	
5,152,963	*	10/1992	Wreyford	422/80
5,279,795		1/1994	Hughes et al. .	
5,364,594	*	11/1994	Johnson et al.	422/90
5,476,637	*	12/1995	Fuhrmann	422/68.1
5,522,915	*	6/1996	Ono et al.	75/385
5,798,271	*	8/1998	Godec et al.	436/146
6,123,904	*	9/2000	Wright et al.	422/80
6,138,497	*	10/2000	Nix et al.	73/19.06

FOREIGN PATENT DOCUMENTS

0 122 511 A2 10/1984 (EP) .

OTHER PUBLICATIONS

Chapelle, F.H. et al., "Geochemistry of dissolved inorganic carbon in a Coastal Plain aquifer. 1. Sulfate from confining beds as an oxidant in microbial CO_2 production," *J. Hydrol.*, 127:85–108 (1991).

Lundström, I., "Hydrogen Sensitive MOS–Structures Part 1: Principles and Applications," *Sensors and Actuators*, 1:403–426 (1981).

(List continued on next page.)

Primary Examiner—Jill Warden
Assistant Examiner—B. R Gordon
(74) *Attorney, Agent, or Firm*—Christensen O'Connor Johnson Kindness PLLC

(57) **ABSTRACT**

The present invention provides apparatuses and processes for the measurement of hydrogen in aqueous solution at concentrations as low as about 0.1 nM. The present invention is capable of accurately and reproducibly measuring the concentration of dissolved hydrogen in an aqueous solution that also contains other dissolved gases, such as oxygen, carbon monoxide and sulfur compounds, such as hydrogen sulfide. In a presently preferred embodiment of a hydrogen analyzer **38** of the present invention, water containing dissolved hydrogen is equilibrated with a carrier gas by means of gas flow through a mass transfer device **10**. Carrier gas is equilibrated with hydrogen from the water within a gas equilibration volume **4** and is then circulated, by means of a pump **1**, through a circuit **14** that includes a moisture removal component **16**, an oxygen removal component **15** and a heated carbon monoxide and sulfur compound removal component **17**, which remove water, oxygen, carbon monoxide and sulfur compounds from the carrier gas without consuming or producing hydrogen. A sensor **7** measures the amount of hydrogen in the carrier gas from which moisture, oxygen, carbon monoxide and sulfur compounds have been removed.

19 Claims, 4 Drawing Sheets

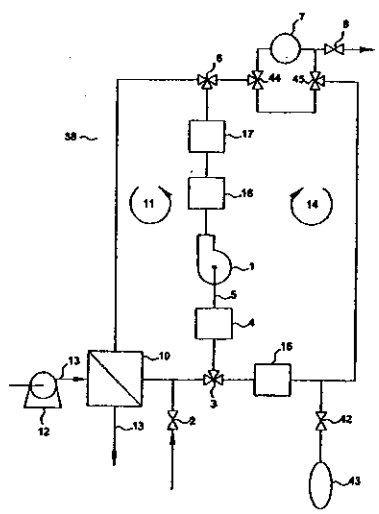

OTHER PUBLICATIONS

Robinson, J.A. et al., "Method for Measuring Dissolved Hydrogen in Anaerobic Ecosystems: Application to the Rumen," *Applied and Environmental Microbiology*, 41(2):545–548 (1981).

Pauss, A. et al., "Continuous Measurement of Dissolved H_2 in an Anaerobic Reactor Using a New Hydrogen/Air Fuel Cell Detector," *Biotechnology and Bioengineering*, 35:492–501 (1990).

Lundström, K.I. et al., "A hydrogen-sensitive Pd-gate MOS transistor," *J. Applied Physics*, 46(9):3876–3881 (1975).

Butler, M.A. et al., "Fiber Optic Hydrogen Sensor," *Sandia Report*, pp. 1–56 (1996).

Strong, G.E. et al., "An In Situ Dissolved–Hydrogen Probe for Monitoring Anaerobic Digesters Under Overload Conditions," *Biotechnology and Bioengineering*, 45:63–68 (1995).

Dornseiffer, P. et al., "Modeling of Anaerobic Formate Kinetics in Mixed Biofilm Culture Using Dynamic Membrane Mass Spectrometric Measurement," *Biotechnology and Bioengineering*, 45:219–228 (1995).

Hanus, F.J. et al., "Techniques for Measurement of Hydrogen Evolution by Nodules," *Methods in Enzymology*, 69:731–739 (1980).

Istok, J.D. et al., "Single–Well, "Push–Pull" Test for In Situ Determination of Microbial Activities," *Groundwater*, 25(4):619–631 (1997).

Gibeault, J.–P. et al., "New Instruments to Measure and Monitor Dissolved Hydrogen in Water," *Transactions of the American Nuclear Society*, 46:612–613 (1984).

Liu, C. et al., "An Advanced Pd/Pt Relative Resistamce Sensor for the Continuous Monitoring of Dissolved Hydrogen in Aqueous Systems at High Subcritical and Supercritical Temperatures," *J. Supercritical Fluids*, 8:263–270 (1995).

Westinghouse Electric Corporation, "Hydrogen–Evolution Monitoring as a Measure of Steam–Generator Corrosion," Research Project, Final Report (1992).

Stiblert, L. et al., "Hydrogen leak detector using a Pd-gate MOS transistor," *Rev. Sci. Instrum.*, 46(9):1206–1208 (1975).

* cited by examiner

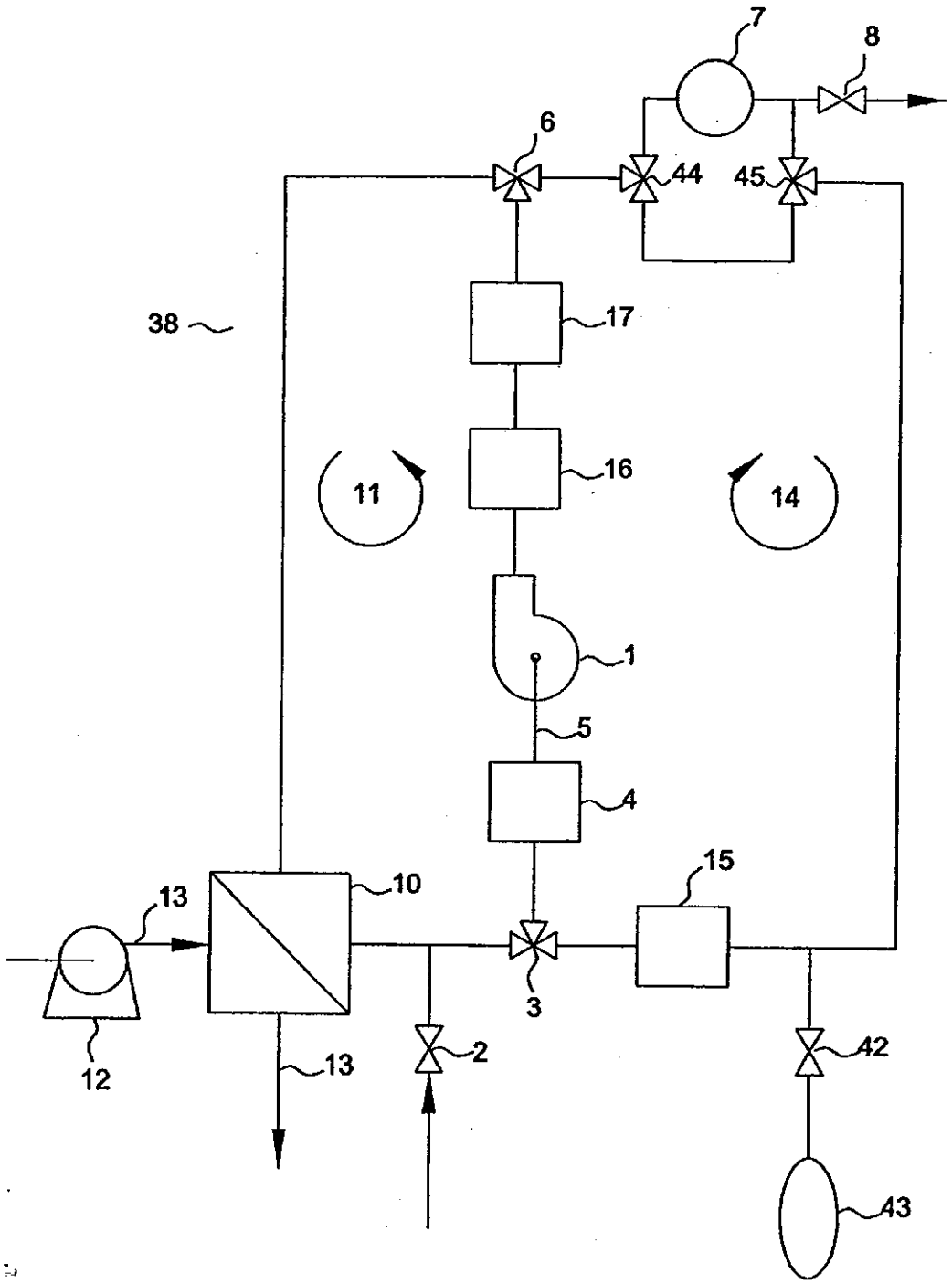

Figure 1

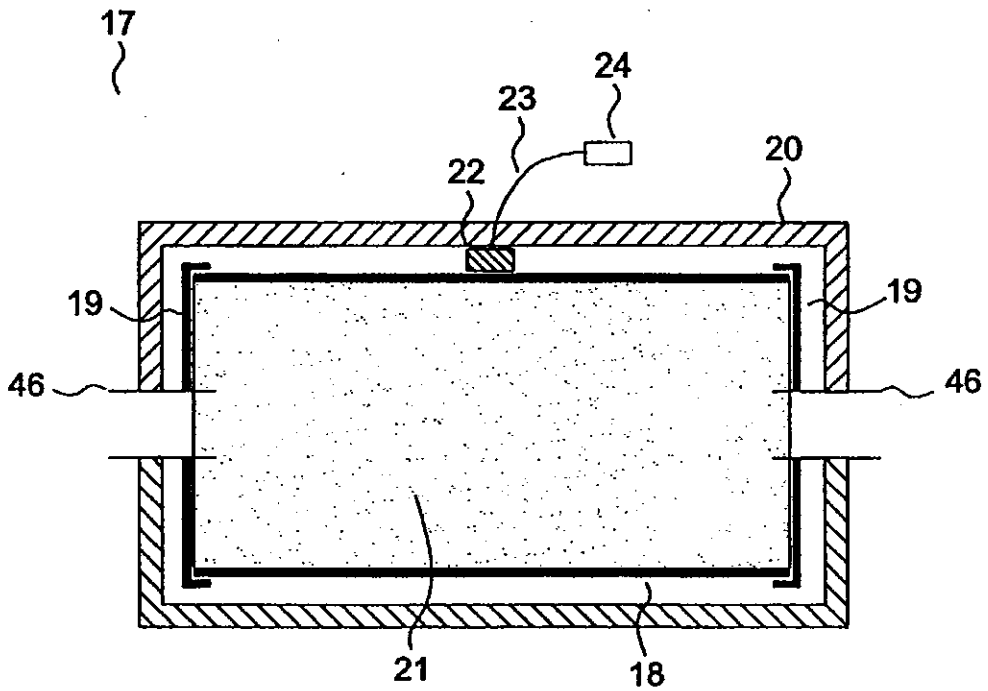

Figure 2

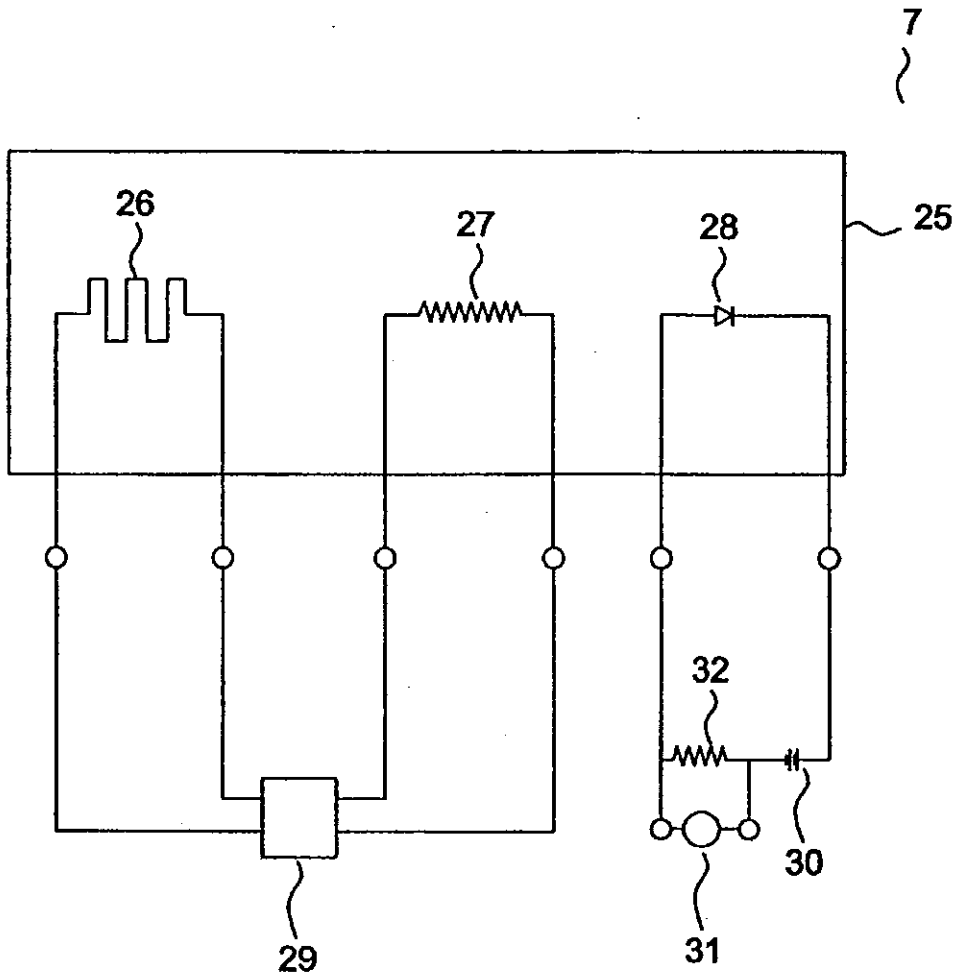

Figure 3

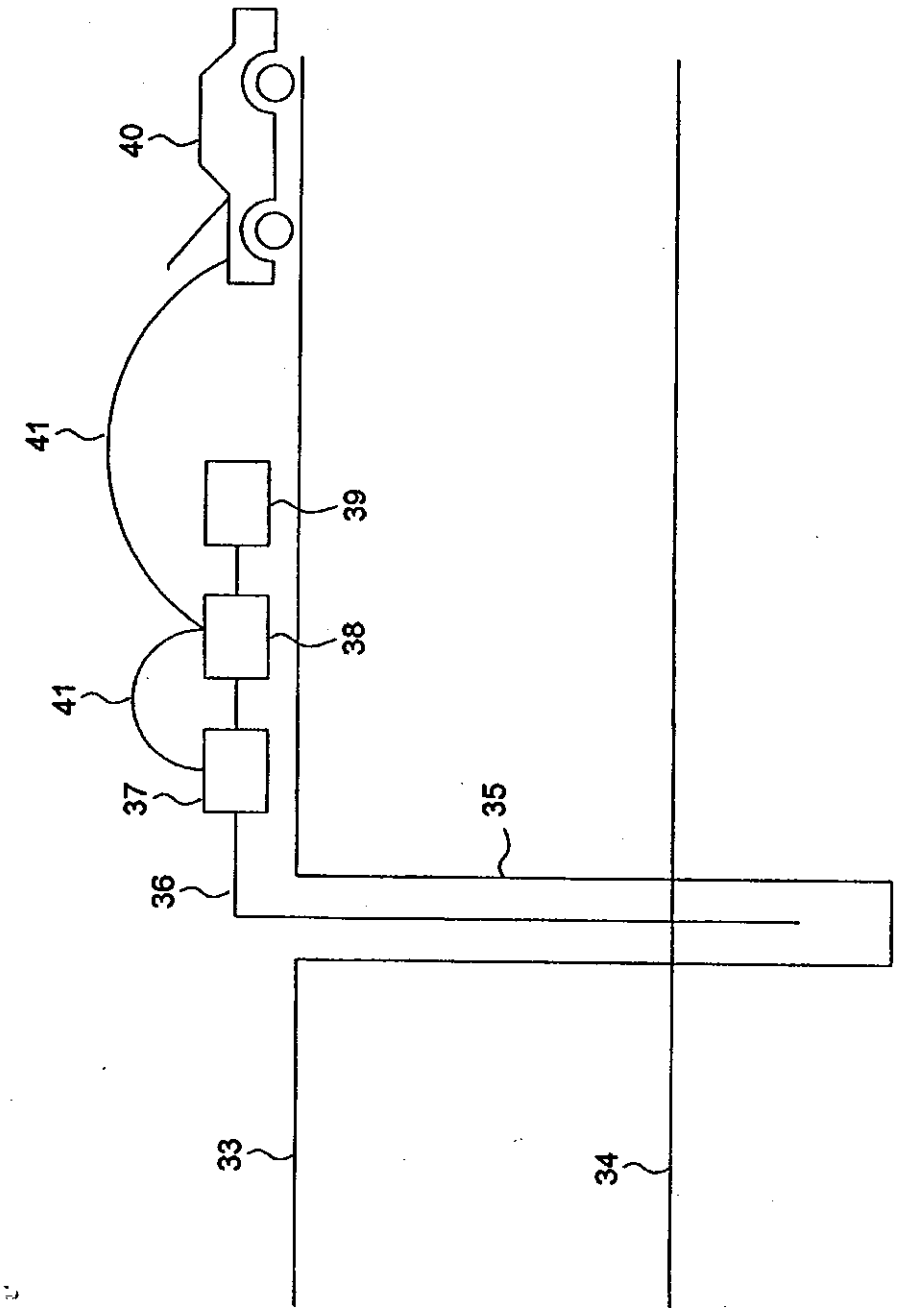

Figure 4

DISSOLVED HYDROGEN ANALYZER

DISSOLVED HYDROGEN ANALYZER

The U.S. Government may have certain rights in this invention as provided for in SBIR Contract No. F41624-97-C-0005 awarded by the Department of the Air Force.

FIELD OF THE INVENTION

The present invention relates to measurement of dissolved molecular hydrogen. In particular, the present invention relates to an apparatus and process for the measurement of hydrogen in water at concentrations as low as on the order of 0.1 nM.

BACKGROUND OF THE INVENTION

Molecular hydrogen present in water in a dissolved form (dissolved hydrogen) is an important indicator of various biological and chemical processes. These processes include in situ bioremrediation of groundwater by engineered methods or by natural attenuation, anaerobic reactors for waste treatment including anaerobic digesters, anaerobic bioprocesses for the manufacture of biochemicals, including fermentation, operation of subsurface, permeable metal-reactive walls for remediation of chlorinated chemicals in groundwater by reductive dehalogenation and corrosion of metals in process systems including boilers. Dissolved hydrogen can be an indicator of the nature, extent, or stability of these processes.

The concentration of dissolved hydrogen can be extremely low. For example, one class of anaerobic bacteria known as iron-reducing bacteria typically demonstrate dissolved hydrogen concentrations in groundwater in the range of 0.1 to 1.0 nM when at steady state (F. H. Chapelle and P. B. McMahon, *J. Hydrology*, 127:85–108 (1991)).

Methods available for measurement of dissolved hydrogen involve direct measurement in the liquid of interest or extraction of dissolved hydrogen into a carrier gas which is then analyzed. Only one method exists for measuring dissolved hydrogen concentrations as low as 0.1 nM and is called the "bubble strip" method (F. H. Chapelle and P. B. McMahon, *J. Hydrology*, 127:85–108 (1991)). This method involves equilibration of a bubble of nitrogen with a flowing stream of groundwater in a gas sampling bulb made from glass. Samples of the gas bubble are injected into a reduction gas analyzer over time until the gas bubble is in equilibrium with the groundwater. The reduction gas analyzer employs chemical reduction of a heated bed of mercuric oxide by hydrogen to form gaseous mercury that is sensed by an ultraviolet detector. Chromatographic separation of hydrogen from other reducing gases is required prior to mercuric oxide reduction. The gaseous hydrogen concentration is then related to the dissolved hydrogen concentration by Henry's law where 0.1 nM dissolved hydrogen approximately correlates to 0.125 ppm of gaseous hydrogen at equilibrium and ambient temperature and pressure. This method is difficult, time-consuming, and expensive to use and has therefore not gained widespread acceptance as an analytical method. Application of the reduction gas analyzer, in combination with hydrogen equilibration over Teflon tubing, to anaerobic digestion in particular is cited as being limited because of its "sophistication, high cost, detection limits, and interference from other solutes" (K. Kuroda, R. G. Silveira, N. Nishio. H. Sunahara, and S. Nagai, *J. Ferment. Boeing*, 71:418–423 (1991)). The gas bubble equilibration method also is greatly subject to operator error, in part because of mass transfer

limitations. A. Pauss, G. Andre, M. Perrier, and S. R. Guiot, *Appl. Environ Microbiol*, 56:1636–1644 (1990). Other methods that are available for hydrogen measurement are insensitive at these low concentrations and in environments of interest.

A Clark probe with reversed polarity is capable of hydrogen measurement in gases or liquids. The lower detection limit is 500 ppm in gases (F. J. Hanus, K. R. Carter, and H. J. Evans, *Methods in Enzymology*, 69:731–739 (1980)) and 15 μg/L (7,500 nM) in water (J. D. Istok, M. D. Humphrey, M. H. Schroth, M. R. Hyman, and K. T. O'Reilly, *Ground Water*, 35:619–631 (1997)). Another electrochemical probe for dissolved hydrogen described by Strong (G. E. Strong and R. Cord-Ruwisch, *BiotechnoL Boeing*, 45:63–68 (1995)) has a detection limit of 30 Pa partial pressure which is equivalent to 240 nM. Ozawa et al. in EP 0096417A1 describe an electrochemical hydrogen sensor that has a sensitivity of 500 nM dissolved hydrogen. Kitamura et al. in EP 0122511 A2 describe a similar electrochemical hydrogen sensor that compensates for oxygen but does not remove its influence and has an insufficient sensitivity in the nM range. Other electrochemical methods employing fuel cells have been described with detection limits of 1 μM (1,000 nM) (J.-P. Gebeault, J. Van Berlo, and M. Dymarski, *Trans. Amer. Nucl Soc.*, 46:612–613 (1984)) and 80 nM. A. Pauss, R. Samson, S. Guiot and C. Beauchemin, *Biotechnol. Bioeng.*, 35:492–501 (1990). Hydrogen sulfide and oxygen interfere with the performance of these probes. A. Pauss, R. Samson, S. Guiot and C. Beaucherun, *Biotechnol. Bioeng.*, 35:492–501 (1990). In one case, oxygen did not interfere as long as it was present in lower concentrations than hydrogen (N. Hara and D. D. Macdonald, *J. Electrochem. Soc.*, 144:4152–4157 (1997)). In the practice of the present invention, very low hydrogen concentrations render this requirement impractical.

Gas chromatography with thermal conductivity detection can be used to detect hydrogen in gases. This method can be used to detect 0.5 nmoles of injected hydrogen (F. J. Hanus, K. R. Carter, and H. J. Evans, *Methods in Enzymology*, 69:731–739 (1980)) which, based on a 1-ml injection, translates to a concentration of 12 ppm in gas or an equilibrium dissolved concentration of 9.6 nM.

An instrument based on thermal conductivity has been developed to measure hydrogen in steam or hydrogen dissolved in water and has an inadequate detection limit of 100 nM (C. R. Wilson, Electric Power Research Institute Report NP-2650 (1982)).

Equilibration of dissolved hydrogen in water with a carrier gas followed by removal of coexisting gases (e.g., oxygen, hydrogen sulfide, carbon dioxide) that can interfere with or dilute hydrogen during analysis has been attempted but not at sufficiently low detection limits. Removal of carbon dioxide from carrier gas equilibrated with rumen fluid followed by gas chromatography resulted in a detection limit of 10 nM (J. A. Robinson, R. F. Strayer, and J. M. Tiedje, *Appl. Environ. Microbiol*, 41:545–548 (1981)). This method is not applicable where carbon dioxide is present in low concentrations.

Mass spectrometry can be used to detect hydrogen in gases or, via use of a membrane system, in liquids (P. Dornseiffer, B. Meyer, and E. Heinzle, *Biotechnol. Bioeng.*, 45:219–228 (1995)). Hydrogen concentrations detected in liquids are in the low μM (1,000 nM) range and accurate measurement can be compromised by biofilm growth on the membrane surface which requires periodic maintenance and cleaning.

A palladium-coated micromirror fiber optic sensor developed by Sandia National Laboratories was shown to be capable of sensing 50 ppm of hydrogen in transformer oil (M. A. Butler, R. Sanchez, and G. R. Dulleck, Sandia Report SAND96-1133. UC-706 (1996)).

Various types of solid state sensors are capable of hydrogen detection. eithley (Cleveland, Ohio) sells a hot wire semiconductor type sensor named CH-H. This sensor contains a platinum wire in a sintered tin oxide semiconductor bead. Hydrogen reacts with oxygen on the platinum wire thereby generating heat. The altered resistance of the platinum wire is sensed in a bridge circuit. This sensor requires the presence of oxygen and is sensitive to approximately 10 ppm hydrogen in gas or an equilibrium dissolved concentration of 8 nM.

Sensors based on the observed change in the electrical resistance of platinum and palladium upon adsorption of hydrogen have been described. These sensors can be immersed in water but have a detection limit of 5,000 nM dissolved hydrogen (C. Liu and D. D. Macdonald, *J. Supercritical Fluids.*, 8:263–270 (1995)).

Lundstrom described metal oxide semiconductor (MOS) transistors containing a palladium gate (K. I. Lundstrom, M. S. Shivaraman, and C. M. Svensson, *J. Appl. Physics.*, 46:3876–3880 (1975); I. Lundstrom, *Sensors and Actuators.*, 1:403–426 (1981)). The sensitivity of these structures to hydrogen in gas is highly dependent on oxygen concentration. A 10 mV response was observed with 0.5 ppm hydrogen in air and with 0.03 ppb hydrogen in an inert gas such as argon or nitrogen. The difference in response is due to the oxygen content of air. These sensors are also sensitive to hydrogen sulfide albeit at ten-fold greater concentrations than hydrogen (I. Lundstrom, *Sensors and Actuators.*, 1:403–426 (1981)) and sulfur compounds are well known for their poisoning of metallic surfaces. A hydrogen leak detector based on such MOS sensors demonstrated a practical sensitivity of 1 ppm (L. Stiblert and C. Svensson, *Rev. Sci. Instrum.*, 46:1206–1208 (1975)).

A hydrogen sensor with a practical sensitivity of 1 ppm in gas is described by Hughes et al. in U.S. Pat. No. 5,279,795. This type of sensor is disadvantageous in part because of the slow response at low hydrogen concentrations. The sensitivity of this sensor is negatively affected by the presence of oxygen. It was reported that hydrogen sulfide does not poison the sensor; however, the tests were conducted in air where hydrogen sulfide poisoning is known to be mitigated by oxidation. This sensor has been incorporated into a hand held detector by DCH Technology which has a detection limit of 10 ppm in gas or an equilibrium dissolved concentration of 8nM.

Immersion of MOS devices in anaerobic water is not practical because of incompatibility. Protection of a MOS device with a gas-permeable membrane such as Goretex™ would be expected to work for detection of dissolved hydrogen in anaerobic water but does not. While anaerobic conditions in groundwater would seem to imply the absence of oxygen; in fact, oxygen is often observed in "anaerobic" groundwater, presumably due to the heterogeneous nature of many aquifers. Additionally, MOS devices are poisoned by hydrogen sulfide. Hydrogen sulfide is a common contaminant present in anaerobic groundwater and in anaerobic digesters. These sensors are also inhibited by carbon monoxide which is found in anaerobic environments.

Neuwelt in U.S. Pat. No. 3,661,010 describes a method employing an electrochemical sensor covered by a membrane over which flows the liquid. This method is disadvantageous because no method for removal of interferences is provided and insufficient sensitivity exists. A dissolved hydrogen analyzer manufactured by Orbisphere Laboratories (Inverness, Calif.) also uses an electrochemical sensor covered by a membrane but is sensitive only to 15 nM dissolved hydrogen and this sensitivity is adversely affected by oxygen.

Immersion of any type of hydrogen probe in a biological medium can also result in growth of biofihm on the probe. Such biofilm growth can subsequently result in dissolved hydrogen consumption or production which can affect the measurement accuracy. Such effects were observed with a gas diffusion probe used in conjunction with a reduction gas analyzer (H. Kramer and R. Conrad, *FEMS Microbiol. Ecol.*, 12:149–158 (1993)).

Schuy in U.S. Pat. No. 3,920,396 describes a membrane equilibration device that uses an extraction gas circulating in a closed loop to attain equilibrium between the gas and liquid sample of fixed volume. This method is disadvantageous because dissolved gases with high Henry constants will be predominately stripped into the gas phase, and the attained equilibrium will occur at a dissolved gas concentration that is significantly less than the original dissolved gas concentration. Furthermore, this method provides no means for removal of interfering gases that also equilibrate across the membrane.

Baillie et al. in U.S. Pat. No. 4,916,079 describe a gas-liquid equilibration device that uses a constant flow of liquid which overcomes the disadvantages of U.S. Pat. No. 3,920,396 by using a continuous flow of liquid and spiking the equilibration gas with a known quantity of the analyte to overcome interferences. This method is not applicable to the analysis of low levels of hydrogen in the practice of the present invention because the concentrations of hydrogen are too low relative to the concentrations of interfering gases.

Ketchum et al. in U.S. Pat. No. 4,236,404 describe a device to monitor hydrogen and other gases in electrical insulating liquids such as transformer oils that employs equilibration between gas and liquid and a thermal conductivity detection gas chromatography for analysis. This device overcomes interferences by chromatographic separation but does not have sufficient sensitivity for the low-concentration applications contemplated by this invention.

Thus, to the best of applicant's knowledge no practical device capable of detecting concentrations on the order of 0.1 nM dissolved hydrogen exists with the sole exception of the reduction gas analyzer which is expensive and must be used in combination with the bubble strip method which is difficult to use.

SUMMARY OF THE INVENTION

The present invention provides apparatuses and processes for the measurement of hydrogen in aqueous solution at concentrations of less than 1.0 nM, and preferably as low as about 0.1 nM. The present invention is capable of accurately and reproducibly measuring the concentration of dissolved hydrogen in an aqueous solution that may also contain other dissolved gases, such as oxygen, carbon monoxide and sulfur compounds, such as hydrogen sulfide.

In one aspect, the present invention provides a hydrogen analyzer that is capable of accurately measuring the amount of hydrogen in aqueous solution at concentrations of less than 1.0 nM, and preferably as low as about 0.1 nM. The hydrogen analyzer includes a mass transfer device, having an aqueous portion through which passes an aqueous

analyte, such as contaminated ground water, and a gaseous portion, through which passes a carrier gas, such as nitrogen gas. Within the mass transfer device, hydrogen gas is transferred from the aqueous analyte to the carrier gas. The hydrogen analyzer also preferably includes a gas equilibrium volume within which hydrogen gas transferred from the aqueous analyte is equilibrated with the carrier gas. The hydrogen analyzer also preferably includes a component for removal of carbon monoxide from the carrier gas containing hydrogen; a component for removal of sulfur compounds from the carrier gas containing hydrogen; a component for removal of oxygen from the carrier gas containing hydrogen; and a hydrogen sensor for measuring the amount of hydrogen in the carrier gas. Preferably the carbon monoxide removal component and the sulfur compound removal component are unitary, i.e., are not physically separate components. Preferably the hydrogen analyzer also includes a water removal component The foregoing components of the hydrogen analyzer of the present invention are in gaseous communication, for example by means of tubes or pipes, and a pump moves the carrier gas through the components of the hydrogen analyzer.

Carbon monoxide removal is necessitated because of the generation of carbon monoxide during the removal of oxygen in accordance with the preferred method of the present invention. Alternative methods of oxygen scavenging may be adapted for use in the present invention, however, which do not generate carbon monoxide, in which case a carbon monoxide removal component is not required. Likewise sulfur and water removal are only necessitated when present in the carrier gas.

In a presently preferred embodiment of the hydrogen analyzer of the present invention, water containing dissolved hydrogen is equilibrated with a carrier gas by means of gas flow through the mass transfer device. Equilibrated carrier gas within the gas equilibration volume is then circulated, by means of the pump, through a circuit that includes the moisture removal component, the oxygen removal component and a heated carbon monoxide and sulfur compound removal component, which remove water, oxygen, carbon monoxide and sulfur compounds from the carrier gas without consuming or producing hydrogen. Preferably the moisture removal cartridge is located before the carbon monoxide and sulfur compound removal cartridge in the gas flow path. A sensor measures the amount of hydrogen in the carrier gas from which moisture, oxygen, carbon monoxide and sulfur compounds have been removed.

The mass transfer device can be any device that allows equilibration of dissolved hydrogen with the carrier gas phase. Examples of acceptable mass transfer devices include hollow fiber gas transfer modules and sparging devices. Presently preferred moisture-removal compositions, for inclusion in the moisture removal component, are molecular sieves and calcium sulfate compositions.

Presently preferred carbon monoxide removal compositions, for inclusion in the carbon monoxide removal component, are metal oxide catalysts including those based on copper and zinc, such as the finely dispersed cupric oxide catalyst named R3–11, manufactured by BASF (Parsipany, N.J.). Preferably the carbon monoxide removal composition includes a colorimetric carbon monoxide indicator. The carbon monoxide removal component also preferably includes a heater for heating the carbon monoxide removal composition within. Preferably the carbon monoxide composition is also capable of adsorbing sulfur compounds. A presently preferred carbon monoxide removal composition that is also capable of adsorbing sulfur compounds is catalyst R3–11.

The oxygen removal component can contain any composition that is capable of efficiently and rapidly removing oxygen from the carrier gas without producing or consuming hydrogen. Presently preferred oxygen removal compositions are based on ascorbic acid.

Presently preferred hydrogen-sensing components include metal oxide semiconductors, such as Shottky diodes and field effect transistors (FET) having a palladium gate. The Shottky diode in the presently preferred embodiment of the hydrogen analyzer of the invention is capable of detecting hydrogen dissolved in water at concentrations from about 0.1 nM to about 100 nM. It is theorized that greater concentrations of up to 1,000,000 nM are easily detectable using different hydrogen-sensing components.

In another aspect, the present invention provides processes for measuring the amount of hydrogen in an aqueous solution including the steps of: (1) equilibration of water containing dissolved hydrogen with a carrier gas; (2) removal of oxygen and, where present, carbon monoxide, moisture and sulfur compounds from the carrier gas containing hydrogen; and (3) measuring the amount of hydrogen in the carrier gas that has been treated to remove oxygen, carbon monoxide, moisture and sulfur compounds. Step 2 of the processes of the present invention preferably further includes removal of moisture from the carrier gas containing hydrogen. The processes of the present invention neither consume nor produce hydrogen. Preferably a solid state sensor is used to measure the concentration of hydrogen. A presently preferred method of measuring hydrogen concentration is by monitoring an output voltage from the solid state sensor and calculating the rate of voltage increase.

BRIEF DESCRIPTION OF THE DRAWINGS

The foregoing aspects and many of the attendant advantages of this invention will become more readily appreciated as the same becomes better understood by reference to the following detailed description, when taken in conjunction with the accompanying drawings, wherein:

FIG. 1 shows a circuit diagram representing a presently preferred configuration of the hydrogen analyzer of the present invention.

FIG. 2 shows a cross-sectional view of a presently preferred embodiment of carbon monoxide and sulfur compound removal component 17.

FIG. 3 shows a circuit diagram representing a presently preferred embodiment of hydrogen sensor 7.

FIG. 4 shows a representative application of the hydrogen analyzer of the present invention to measure the concentration of dissolved hydrogen in groundwater.

DETAILED DESCRIPTION OF THE PREFERRED EMBODIMENT

The present invention provides apparatuses and processes for the measurement of hydrogen in aqueous solution at concentrations as low as about 0.1 nM. The apparatuses and processes of the present invention are capable of accurately and reproducibly measuring the concentration of dissolved hydrogen in an aqueous solution that may also contain other dissolved gases, such as oxygen, carbon monoxide and sulfur compounds.

FIG. 1 shows a presently preferred configuration of a hydrogen analyzer 38 of the present invention. Hydrogen analyzer 38 includes a hydrogen sensor 7, a mass transfer device 10, a gas reservoir 4, an oxygen removal cartridge 15, a moisture removal cartridge 16, and a carbon monoxide and

sulfur compound removal cartridge 17. In a preferred embodiment of the present invention, the carbon monoxide and sulfur compound removal cartridge 17 serves as the gas reservoir 4, in which case a separate reservoir is not required. In operation, water containing dissolved hydrogen, is equilibrated with a carrier gas by means of gas flow in a first flow circuit 11. Equilibrated carrier gas within gas equilibration volume 4 is then circulated through a second flow circuit 14 during which oxygen, water, carbon monoxide, and sulfur compounds are removed from the carrier gas without consuming or producing hydrogen. Sensor 7 then measures the amount of hydrogen in the carrier gas.

With reference again to FIG. 1, during the sensor preparation stage, called Stage A, air pump 1 pulls air in through first solenoid valve 2 and second solenoid valve 3 and gas reservoir 4 via tubing 5. The air is then discharged from pump 1 through moisture removal cartridge 16, heated carbon monoxide and sulfur compound removal cartridge 17, third solenoid valve 6 and fourth solenoid valve 44, and hydrogen sensor 7 prior to being discharged to the atmosphere through fifth solenoid valve 8. The purpose of Stage A is to allow residual hydrogen present on sensor 7 to be oxidized by oxygen present in air. Presence of residual hydrogen on sensor 7 is typically indicated by a sensor output voltage that does not return to its baseline voltage following exposure to hydrogen. Residual hydrogen on the sensor is especially problematic in oxygen-free gas, such as is generated within hydrogen analyzer 38 of the present invention.

The length of Stage A is dependent on the characteristics of sensor 7. In the case of a metal-oxide semiconductor Shottky diode with a palladium/silver gate and an alumina insulator, a one-minute Stage A is usually sufficient but may need to be longer. Preconditioning may be required regularly or intermittently with specific sensors 7. These preconditioning steps may include exposure to nitrogen or hydrogen at various temperatures for various times and will be dependent on the specific nature of sensor 7.

With reference again to FIG. 1, during Stage B, which is referred to as the nitrogen purge stage and which follows Stage A, nitrogen gas is used to purge air and traces of hydrogen from oxygen removal cartridge 15, tubing 5, gas reservoir 4, moisture removal cartridge 16, and heated carbon monoxide and sulfur compound removal cartridge 17. Alternately, other methods of hydrogen removal can be utilized within the scope of the present invention, such as a thermal oxidizer. The purpose of Stage B is to remove traces of hydrogen that can interfere with quantification of low concentrations of dissolved hydrogen in an aqueous sample that is being analyzed. Nitrogen enters through sixth solenoid valve 42 from cylinder 43 and passes through oxygen removal cartridge 15, second solenoid valve 3, gas reservoir 4, tubing 5, pump 1, moisture removal cartridge 16, heated carbon monoxide and sulfur compound removal cartridge 17, third solenoid valve 6 and fourth solenoid valve 44, and sensor 7, and exits through fifth solenoid valve 8.

Stage C follows Stage B and is referred to as the hydrogen equilibration stage during which hydrogen gas in the aqueous sample being analyzed is equilibrated with the carrier gas in gas reservoir 4 and first flow circuit 11. With reference again to FIG. 1, in Stage C sixth solenoid valve 42 and fifth solenoid valve 8 close and third solenoid valve 6 changes direction to promote flow in first flow circuit 11 through air pump 1, cartridges 16 and 17, third solenoid valve 6, the gas side of mass transfer module 10, second solenoid valve 3, and gas reservoir 4. The aqueous sample being analyzed is pumped through the liquid side of gas transfer module 10 by pump 12 via tubing 13. The duration of time allowed for Stage C is determined by the time required for hydrogen in the aqueous sample being analyzed to equilibrate with the carrier gas in gas reservoir 4 and first flow circuit 11. Stage C time is typically in the range of 1–10 minutes. The void volumes of moisture removal cartridge 16 and sulfur compound removal cartridge 17 can serve as an equivalent gas reservoir 4, if desired.

Mass transfer module 10 can be any device that allows equilibration of dissolved hydrogen with the carrier gas phase. Mass transfer module 10 is preferably constructed from hollow fiber gas transfer modules or sparging devices. These hollow fiber modules are composed of a plurality of hollow fiber membranes encased in a shell with integral manifold. The manifold mechanically supports the ends of the hollow fiber membranes and directs carrier gas in and out of the lumens of the hollow fiber membranes. The shell surrounds the hollow fiber membranes and directs liquid water past the outer surface of the hollow fiber membranes. Well-designed modules will optimize liquid flow patterns to minimize liquid phase mass transfer resistance. Additionally, well-designed modules will contain hollow fiber membranes that have a high permeability for hydrogen. The sparging devices are designed similarly to a continuous flow gravity settler in which carrier gas is introduced into a flowing liquid via a porous sparging element.

By way of non-limiting example, module GT-0204005 manufactured by NeoMecs (Eden Prairie, Minn.) contains 0.5 square feet of a coated microporous hollow fiber. The gas permeability (P/1) of this membrane is approximately $1\times10^4 cm^3/cm^2$-sec-cmHg which is sufficient for the present invention. However, design of the liquid flow pattern is more critical than membrane permeability. Evaluation of the NeoMecs model GT-02010013 module which has 0.13 square feet of the identical membrane was substantially inferior to the model GT-0204005 mainly because of the liquid flow design and not because of the difference in membrane surface area according NeoMecs. A mass transfer time of 1–10 minutes and preferably 2–5 minutes is usually sufficient for equilibration of dissolved hydrogen concentrations up to 10 nM where a NeoMecs GT-0204005 module is used which has 0.5 square feet of membrane surface area and a water flow of 100–1000 milliliters per minute. Water flow is preferably 300–1,000 milliliters per minute. Other mass transfer configurations are suitable and could be readily evaluated by one of ordinary skill in the art without undue experimentation, such as the spargers noted above.

Stage D follows Stage C and is referred to as the carrier gas preparation stage.

During Stage D, oxygen, carbon monoxide, water, and sulfur compounds are removed from the carrier gas, With reference again to FIG. 1, in Stage D, second solenoid valve 3 and third solenoid valve 6 reverse direction and fourth solenoid valve 44 and seventh solenoid valve 45 adjust to promote carrier gas flow through second circuit 14 while bypassing sensor 7. Gas flow through second circuit 14 entails discharge from pump 1 to moisture removal cartridge 16, heated carbon monoxide and sulfur compound removal cartridge 17, third solenoid valve 6, fourth solenoid valve 44 and seventh solenoid valve 45, oxygen removal cartridge 15, second solenoid valve 3, gas reservoir 4, and back to air pump 2. During gas flow through second circuit 14, oxygen, carbon monoxide, water, and sulfur compounds are removed from the carrier gas to levels such that detection of low levels of hydrogen in the carrier gas is possible by hydrogen sensor 7.

Oxygen can be present in the carrier gas due to transfer of oxygen, that is present in the aqueous solution being analyzed, across mass transfer module **10**. For example, groundwater that is referred to as "anaerobic", ie., lacking oxygen, may not always be devoid of dissolved oxygen. The presence of dissolved oxygen in "anaerobic" water is an unexpected observation. Traces of dissolved oxygen (ie., less than 1 milligram per liter) can be present in an aqueous solution, especially in groundwater, that is supporting an iron-reducing terminal electron accepting process. This process employs iron-reducing bacteria that can be facultative aerobes and thus can live in the presence of dissolved oxygen. These traces of oxygen prevent sensor **7** from having the required sensitivity to low concentrations of hydrogen. This problem is most notable for iron-reducing terminal electron accepting processes where the typical dissolved hydrogen concentrations are very low, namely 0.1 to 1.0 nM.

Oxygen is removed from the carrier gas by oxygen removal cartridge **15** during Stage D. Oxygen removal cartridge **15** removes oxygen from carrier gas that flows through an oxygen removal composition contained within the module. The oxygen removal composition within oxygen removal cartridge **15** is preferably capable of efficiently and rapidly removing oxygen from the carrier gas without producing or consuming hydrogen. The oxygen removal composition may be composed of any material as long as it possesses the foregoing characteristics. Ascorbic acid-based preparations such as Anaeropack and Anaeropouch manufactured by Mitsubishi Gas Chemical America, Inc. (New York, N.Y.) are the presently preferred oxygen removal compositions. Other oxygen removal compositions useful in the practice of the present invention include, but are not limited to: catalyzed ascorbic acid, alkaline hydroquinone or catechol, catalyzed hydroquinone or catechol, catalyzed sulfite, chelated salicylic acid, and catalyzed dicarboxylic acids. Preferably oxygen removal cartridge **15** will include a colorimetric oxygen indicator.

Oxygen absorbing compositions that are not useful as oxygen removal compositions in the practice of the present invention include: sodium borohydride (produces hydrogen), lithium aluminum hydride (produces hydrogen), carbon monoxide-reduced, finely-dispersed cupric oxide catalyst (adsorbs hydrogen), hydrogen-reduced, finely-dispersed copper catalyst (releases adsorbed hydrogen), iron powder-based preparations (not preferred because is slow and can produce hydrogen via corrosion), heated copper (can produce hydrogen from water via corrosion), lithium-based oxygen scavengers, such as Nanosorb resin (produces hydrogen from water), and zirconium sponge-based oxygen scavengers such as the High Capacity Gas Purifier by Supelco (produces hydrogen from water).

While catalyzed ascorbic acid or alkaline hydroquinone preparations are useful as oxygen removal preparations for use in cartridge **15**, their reaction with oxygen results in an unexpected side reaction that forms carbon monoxide. Removal of produced carbon monoxide is required and is accomplished by sulfur compound and carbon monoxide removal cartridge **17**. Carbon monoxide is removed so as to prevent interference with measurement of hydrogen by sensor **7**. Carbon monoxide removal is required only if generated during the process, such as when using the oxygen removal method of the preferred embodiment of the invention, but may not be required for alternate embodiments of the invention. Carbon monoxide can be present in anaerobic water that contains sulfidogenic or methanogenic bacteria and can be transferred to the carrier gas across gas transfer module **10**. For example, carbon monoxide is generated by *Methanosarcina barkeri* during formation of methane and carbon dioxide from acetate where carbon monoxide is an intermediate (G. Gottschalk, *Bacterial Metabolism*, Springer-Verlag, New York. pp. 257–259 (1996)).

FIG. 2 shows a cross-sectional view of a presently preferred design of carbon monoxide removal cartridge **17**. Carrier gas flows into and out of carbon monoxide removal cartridge **17** via ports **46**. Heat conducting tube **18** and end caps **19** are encased with insulation **20**. Carbon monoxide removal composition **21** is contained within tube **18**. A preferred carbon monoxide removal composition is a finely dispersed cupric oxide catalyst named R3–11 and manufactured by BASF (Parsippany, N.J.). Metal oxide catalysts including those based on copper and zinc, are suitable for use as a carbon monoxide removal composition in the practice of the present invention. Catalyst R3–11, in its oxidized form, is capable of removing carbon monoxide from carrier gas when heated.

Self-regulating heater **22** heats preparation **21** to the desired temperature when powered by power source **24** that is connected to heater **22** by wires **23**. The temperature control is significant because sufficient carbon monoxide removal does not occur at temperatures that are too low and hydrogen generation occurs due to corrosion processes at temperatures that are too high. Preferably the temperature should be between about 45° C. to 90° C., and preferably between about 55° C. and about 80° C. for Catalyst R3–11. The ability of oxidized R3–11 to remove carbon monoxide at these temperatures was not expected based on vendor literature that indicates a minimum temperature requirement of 100° C. Additionally, the vendor literature indicates that hydrogen will also be removed at temperatures greater than 100° C. However, at temperatures between 55° C. and 80° C. carbon monoxide is removed and hydrogen is not removed.

The present inventor discovered that carbon monoxide is adsorbed to R3–11 but is not oxidized to carbon dioxide at temperatures less than 100° C. Hydrogen is not adsorbed on oxidized R3–11 at these temperatures and at room temperature. Interestingly, hydrogen is adsorbed by carbon monoxide-reduced R3–11 at room temperature. These observations were unexpected and resulted in oxidized R3–11 (as opposed to reduced R3–11) having great utility for removal of carbon monoxide in the present invention. Other catalysts useful as carbon monoxide removal compositions in the practice of the present invention include, but are not limited to, Carulite, formerly known as Hopcalite. Carulite is a low-temperature oxidation catalyst composed of manganese dioxide, copper oxide, and aluminum oxide and is manufactured by Carus Chemical Co. (LaSalle, Ill.). Preferably the carbon monoxide removal composition will include a colorimetric carbon monoxide indicator.

Metal oxide, carbon monoxide removal compositions, such as R3–11, when used for carbon monoxide removal in the manner described above, will have a finite lifetime because carbon monoxide is being adsorbed rather than oxidized to carbon dioxide. Eventually the binding sites for carbon monoxide will become saturated and the preparation will have no further capacity for carbon monoxide removal. When saturation of the available binding sites occurs, the carbon monoxide removal composition will require replacement or regeneration. The presence of water vapor also limits the lifetime of metal oxides that are used to remove carbon monoxide. The likely reason is that the metal oxide composition is being used at temperatures below the boiling

point of water and thus water vapor condenses on the metal oxide surface and decreases the capacity for carbon monoxide adsorption.

In the practice of the present invention, moisture removal cartridge **16** is preferably included in hydrogen analyzer **38**, at a point in first flow circuit **11** and second flow circuit **14** prior to carbon monoxide removal cartridge **17**, in order to absorb water from the gas entering cartridge **17**, thereby minimizing the replacement frequency of carbon monoxide removal cartridge **17**. Moisture removal cartridge **16** can contain any moisture removal preparation as long as it does not consume or generate hydrogen and removes sufficient moisture to prevent premature limitation of the lifetime of carbon monoxide removal cartridge **17**. A presently preferred moisture-removal composition for inclusion in moisture removal cartridge **16** is 13× molecular sieves. Calcium sulfate preparations, such as Drierite (W A Hammond Drierite Company, Ltd., Xenia, Ohio), are also useful. Preferably, a colorimetric moisture indicator, such as $CoCl_2$, is included in moisture removal cartridge **16**. Placement of moisture removal cartridge **16** in the line of gas flow following oxygen removal cartridge **15** and preceding carbon monoxide removal cartridge **17** is required because certain compositions included in oxygen removal cartridge **15** may release moisture that must be removed from the carrier gas by moisture removal cartridge **16** prior to entering carbon monoxide removal cartridge **17**.

Sulfur compounds such as hydrogen sulfide can also interfere with measurement of hydrogen by sensor **7**. Sulfur compounds, when present, are more problematic than oxygen and carbon monoxide because they can poison sensor **7** and disable it from further use. One sulfur compound, hydrogen sulfide, is common in anaerobic water because sulfidogenic bacteria can produce it from sulfate. Because hydrogen sulfide is volatile, it is transferred across gas transfer module **10** into the carrier gas.

Sulfur compounds are preferably removed from the carrier gas by carbon monoxide removal cartridge **17** during Stage D. Any composition that is capable of adsorbing sulfur compounds can be included in carbon monoxide removal cartridge **17** so long as it does not consume or produce hydrogen and removes sulfur compounds sufficiently so as to prevent poisoning of sensor **7**. Copper oxide catalysts, such as R3–11, are presently preferred for sulfur compound removal and thus serve a dual purpose in the present invention: they can remove carbon monoxide and sulfur compounds simultaneously. Other preferred sulfur adsorbing compounds include, but are not limited to: BASF catalyst R3–12 (Parsippany, N.J.) which includes zinc oxide as well as copper oxide, and hydrated iron oxide. Preferably, a colorimetric sulfur compound indicator is included in carbon monoxide removal cartridge **17**.

The duration of Stage D depends, in part, on the identity of the specific compositions used in oxygen removal cartridge **15**, moisture removal cartridge **16**, and carbon monoxide removal cartridge **17**. Based on the presently preferred configuration of hydrogen analyzer **38** of the present invention, the time period for removal of oxygen, sulfur compounds, water, and carbon monoxide from the carrier gas is preferably from about 0.5 minutes to about 10 minutes, more preferably from about 2 minutes to about 4 minutes. Oxygen concentrations should be reduced to less than 0.1% v/v prior to proceeding to the next stage. Carbon monoxide concentrations should be reduced to less than 10 ppm in the carrier gas prior to proceeding to the next stage.

Stage E, referred to as the measurement stage, is the final stage during which hydrogen is measured by hydrogen sensor **7**. With reference again to FIG. **1**, fourth solenoid valve **44** and seventh solenoid valve **45** reverse direction to promote flow past sensor **7** in second flow circuit **14**. Sensor **7** is operated by an electrical circuit shown in FIG. **3** during Stages A, B, C, D, and E and data are recorded from sensor **7** during Stage E. FIG. **3** is a schematic representation of sensor **7** and associated electronics that are required for operation of sensor **7** in the presently preferred embodiment of hydrogen analyzer **38** of the present invention. As shown in FIG. **3**, a Shottky diode **28** operates as the hydrogen-sensing component of hydrogen sensor **7** in the presently preferred embodiment of hydrogen analyzer **38** of the present invention. Any device that is sensitive to hydrogen at the desired concentrations can be used as the hydrogen-sensing component of hydrogen sensor **7**. Another example of a useful hydrogen-sensing device is a field effect transistor (FET) with a palladium gate.

In the presently preferred embodiment, sensor **7** is manufactured using silicon-based microfabrication technology on silicon semiconductor substrate **25** and includes platinum resistance heater **26**, platinum resistance temperature detector (RTD) **27**, and Shottky diode **28**, with a hydrogen-sensitive gate. The Shottky diode is a metal-insulator-semiconductor (MIS) diode with p-type silicon semiconductor, a two-part insulator composed of silica adjacent to the semiconductor and alumina adjacent to the gate, and a metal palladium/silver gate. Substrate **25**, including platinum resistance heater **26**, platinum resistance temperature detector (RTD) **27**, and Shottky diode **28**, is manufactured by Case Western Reserve University. Substrate **25**, including platinum resistance heater **26**, platinum resistance temperature detector (RTD) **27**, and Shottky diode **28** are all enclosed in a TO-5 housing. The temperature of sensor **7** is controlled by controller **29** that takes a temperature input from RTD **27** as its process variable and produces an output directed to heater **26** as its control variable. The temperature of sensor **7** is preferably maintained between about 100° C. and about 200° C. The lower limit of the temperature range is selected to prevent moisture condensation. The upper limit of the temperature range is selected based on the specific characteristics of sensor **7**. Shottky diode **28** is integrated into a circuit comprising power source **30**, voltmeter **31**, and resistor **32**.

Hydrogen dissolved in water is detectable with the presently preferred embodiment of hydrogen analyzer **38** down to concentrations of about 0.1 nM using the Shottky diode type sensor **7** described herein. This sensor is especially suited for detection of low hydrogen concentrations but can be used to measure dissolved hydrogen concentrations up to about 100 nM. Hydrogen analyzer **38** of the present invention can also be readily modified to detect higher concentrations of dissolved hydrogen.

To the best of the inventor's knowledge, output from the Shottky diode in the present invention is utilized in a novel manner. Typically solid state sensors for hydrogen yield a steady state output voltage that is directly related to the hydrogen concentration. However, in the presence of trace levels of hydrogen contained in a carrier gas devoid of oxygen, these sensors have been observed to be incapable of attaining a steady state voltage output within a reasonable timeframe. Rather the output increases continuously and the rate at which this output increases is linearly related to the hydrogen concentration. The reasons for this unexpected observation appear to be kinetic and diffusional limitations that occur at low hydrogen concentrations.

Thus, during Stage E, the output from sensor **7** is monitored over a period of time and the rate of voltage increase

is calculated. This rate is compared to a calibration curve in order to quantify the hydrogen concentration. For example, a concentration of 0.1 ppm hydrogen yields a rate of approximately 10 millivolts per minute, a concentration of 1.0 ppm hydrogen yields a rate of approximately 100 millivolts per minute, and a concentration of 10 ppm hydrogen yields a rate of approximately 1,000 millivolts per minute. The carrier gas hydrogen concentrations can then be related to dissolved hydrogen concentrations in water by Henry's law coefficients (R. H. Perry and C. H. Chilton, *Chemical Engineers' Handbook*, McGraw-Hill Book Company, New York, P. 3–97. (1973)) or Ostwald coefficients (P. Gerhardt, R. G. E. Murray, W. A. Wood, and N. R. Krieg, *Methods for General and Molecular Bacteriology*, American Society for Microbiology. Washington D.C., pp. 145 and 184 (1994)). For example, at 20° C., Henry's coefficient for hydrogen in water is 6.83×10^4 atmospheres. The dissolved hydrogen concentration in water is calculated by the following equation:

$$C_L=10^9P_AC_GC_W/H$$

where C_L is the dissolved hydrogen concentration in liquid water in units of nM, 10^9 is for conversion from units of M to nM, P_A is the ambient pressure in units of atmospheres (typically equal to 1), C_G is the hydrogen concentration measured in the carrier gas in units of ppm, C_W is the concentration of pure water in molarity (M) units and is equal to 55.6 M, and H is Henry's constant in units of atmospheres. H is temperature-dependent and at 20° C. this equation can be reduced for most applications to:

$$C_L=0.81C_G$$

At 10° C. the equation can be reduced to:

$$C_L=0.87C_G$$

Finally, FIG. 4 depicts field application of hydrogen analyzer **38** of the present invention for measurement of dissolved hydrogen in groundwater. Contaminated ground **33** includes groundwater at level **34** and a groundwater monitoring well **35**. Groundwater is pumped through tubing **36** via pump **37** to dissolved hydrogen analyzer **38** which discharges to waste container **39**. Pump **37** and dissolved hydrogen analyzer **38** are powered by a 12-volt battery in automobile **40** via jumper cables **41**. Typically, the total time required to complete Stages A–E and obtain a measurement of the concentration of dissolved hydrogen is approximately 15–20 minutes.

Hydrogen analyzer **38** of the present invention has numerous uses. In general, the concentration of dissolved hydrogen can be used to monitor the nature, extent, rate, or stability of anaerobic biological systems.

Natural attenuation, also known as passive remediation or intrinsic remediation, is based on the natural ability of microorganisms present in groundwater to biodegrade environmental contaminants. Different microorganisms are capable of mediating these biodegradation processes. One method of classification of these bacteria is by the type of terminal electron accepting process (TEAP) used during oxidation of organic contaminants. For example, the aerobic TEAP is employed by bacteria using oxygen as the terminal electron acceptor. Different TEAPs are employed by anaerobic bacteria. Anaerobic TEAPs include denitrification, manganese reduction, ferric iron reduction, sulfidogenesis, and methanogenesis. Knowledge of which TEAPs exist in a given aquifer is important with respect to understanding biodegradation processes that are occurring.

Dissolved hydrogen concentration is an indicator of the type of TEAPs that are present in a body of water. Dissolved hydrogen concentrations ranging from 0.1–1.0 nM are associated with the iron-reducing TEAP, dissolved hydrogen concentrations ranging from 2–6 nM with the sulfidogenic TEAP, and dissolved hydrogen concentrations ranging from 10–20 nM with the methanogenic TEAP (F.H. Chapelle and P. B. McMahon, *J. Hydrology*, 127:85–108 (1991)). One application of the present invention is to measure dissolved hydrogen concentrations in groundwater at contaminated sites. Measurement of dissolved hydrogen allows determination of the types of TEAPs that are present, and thus provides information about specific biodegradation processes. For example, reductive dechlorination is one mechanism of biodegradation of chlorinated organic contaminants. These contaminants can include trichloroethene (TCE) among others. Reductive dechlorination of TCE via a biological mechanism can involve the pathway: TCE→cDCE→VC→CO_2 where cDCE is cis-dichloroethene, VC is vinyl chloride, and CO_2 is carbon dioxide. The first two reactions (TCE→cDCE→VC) are based on reductive dechlorination and typically occur in methanogenic and sulfidogenic TEAPs. The last reaction (VC→CO_2) is known to occur in the iron-reducing TEAP. Knowledge of which TEAPs exist in different zones of an aquifer can indicate which of these reactions are occurring at a site.

Enhancement of reductive dechlorination can also be accomplished by increasing or adjusting the dissolved hydrogen concentration in groundwater to a desired level. Dissolved hydrogen can be adjusted by sparging a mixture of hydrogen in nitrogen into groundwater thereby increasing the dissolved hydrogen concentration. Dissolved hydrogen can also be adjusted by adding the lactic acid-based preparation known as Hydrogen Release Compound (HRC) manufactured by Regenesis (San Juan Capistrano, Calif.). Lactic acid is slowly released by this preparation and is subsequently consumed by anaerobic bacteria that generate hydrogen. No matter how dissolved hydrogen in groundwater is adjusted, a means for measurement is required. The present invention can be used to measure dissolved hydrogen in such an application and thus facilitate accurate hydrogen concentration adjustment.

Anaerobic digesters are used to biodegrade waste water containing various organic compounds. These digesters employ consortia of anaerobic bacteria to accomplish the overall reaction: Organic matter →CO_2+CH_4 where CO_2 is carbon dioxide and CH_4 is methane. Instability of these consortia and thus of the digestor is a major problem in waste water treatment. Digestors commonly become unstable and "go sour" which is attributable to excess acid production. Measurement of pH is not a useful process variable for controlling digestor stability because it does not indicate instability at a sufficiently early point in time. Dissolved hydrogen concentration is a better indicator of digestor stability and is useful as a process variable to be used in a process control algorithm. Dissolved hydrogen has been described as an "ideal variable" for monitoring and control of anaerobic systems (J.-C. Frigon and S. R. Guiot, *Enzyme Microb. Technol.*, 17:1080–1086 (1995)). Nonetheless, the dissolved hydrogen may be present at concentrations less than 100 ppm (W. R. Slater, M. Merigh, N. L. Ricker, F. Labib, J. F. Ferguson, and M. M. Benjamin, Wat. Res., 24:121–123 (1990)). The present invention, which is capable of sensing dissolved hydrogen down to a concentration of about 0.1 nM, is thus useful for monitoring digestor stability.

Many useful biochemical products are produced in bioreactors that employ microorganisms. Many of these bioreactors are operated anaerobically. Examples of biochemical products produced in bioreactors that employ microorganisms include antibiotics, amino acids, proteins, vitamins, growth regulators, hormones, steroids, beer, and wine. Control of these processes is often difficult because the process variables are not easily measured. For example, antibiotics are sometimes measured using a bioassay that requires an inordinate amount of time for completion. Such assays are not amenable to incorporation into process control strategies. Surrogate process variables are of interest in the biochemical process industry and include pH, carbon dioxide evolution rate, and carbon source concentration, among others. These surrogate process variables are incorporated into a process control algorithm to enable prediction of biochemical reaction extent or rate. Dissolved hydrogen is another process variable that is usefull in this regard and has been used to evaluate antibiotic susceptibility (E. G. Homnsten, H. Elwing, E. Khilstrom, and I. Lundstrom, *J. Antimicrobial Therapy*, 15:695–700 (1985)) and bioreactor mixing inhomogeneity (N. Cleland, E. G. Horsten, H. Elwinng, S.-O. Enfors, and I. Lundstrom, *Appl. Microbiol. Biotechnol.*, 20:268–270 (1984)). Pd-MOS sensors have been used for these applications but may not be applicable in cases where hydrogen sulfide, carbon monoxide, or oxygen are present In these cases, hydrogen analyzer 38 of the present invention will be useful.

Subsurface permeable walls composed of iron filings or other metallic materials are a usefull remediation tool for chlorinated solvent plumes in aquifers. These metal-reactive walls promote reductive dechlorination by anaerobic corrosion processes that produce hydrogen. The rates of corrosion and reductive dechlorination are related to the rate of hydrogen production (E. Reardon, *Environ. Sci. Technol.*, 29:2936–2945 (1995)). Dissolved hydrogen concentrations are a potentially important parameter that can be used to monitor the rate or extent of such processes. These metal-reactive walls are in effect consumed over time because of corrosion. In addition, the rate can decrease due to passivation of the metal surfaces. Thus measurement of dissolved hydrogen can also be used to monitor the status of these metal-reactive walls. Upon a significant decrease in dissolved hydrogen concentration, for example, the metal-reactive wall may be in need of regeneration or replacement. The present invention will be useful for making these determinations.

Dissolved hydrogen can be used as an indicator of corrosion. Hydrogen is formed from water when metals undergo corrosion in the absence of oxygen. Hydrogen can also cause embrittlement stress cracking corrosion (SCC) of stainless steels. Measurement of dissolved hydrogen to assess and monitor corrosion is another use for the present invention. Monitoring of corrosion pertains to operation of process equipment, pipelines, boilers, and any metal system that involves the processing, storage, or conveyance of water-based liquids.

While the presently preferred use of the present invention is measurement of dissolved hydrogen in aqueous solution, measurement of dissolved hydrogen in nonaqueous liquids such as transformer oil is possible.

The following examples merely illustrate the various embodiments now contemplated for practicing the invention, but should not be construed to limit the invention.

EXAMPLE 1

Dissolved Hydrogen Transfer to Gaseous Nitrogen Across NeoMecs GT-0204005 Hollow Fiber Membrane Module

Groundwater containing different concentrations of dissolved hydrogen was circulated through a NeoMecs GT-0204005 hollow fiber gas membrane module. This module contains 0.5 square feet of membrane surface area. The water containing dissolved hydrogen was pumped through the shell of the module at a flow rate of 220 milliliters per minute. A volume of 12 milliliters of nitrogen gas was circulated through the lumen of the hollow fibers at a flow rate of 5,000–7,000 milliliters per minute.

The concentration of dissolved hydrogen in the water was determined using the bubble strip method in conjunction with a reduction gas analyzer (F. H. Chapelle and P. B. McMahon, *J. Hydrology*, 127:85–108 (1991)). This concentration is reported in Table I as C_G, the equilibrated gas-phase hydrogen concentration in ppm. Table I shows that an equilibrated gas-phase hydrogen concentration of 0.43 ppm (equivalent to 0.34 nM dissolved hydrogen) equilibrated across the hollow fiber membrane module in 4 minutes. An equilibrated gas-phase hydrogen concentration of 87 ppm (equivalent to 70 nM dissolved hydrogen) equilibrated across the hollow fiber membrane module in 6 minutes.

TABLE I

Gas-Phase Hydrogen Concentration (ppm) Transferred Across NeoMecs GT-0204005 Hollow Fiber Membrane Module

Bubble Strip Hydrogen Concentration C_G	Time (minutes)			
(ppm)	0	2	4	6
0.43	0.15	0.36	0.41	—
87	1.5	47	72	90

EXAMPLE 2

Hydrogen Sensor Response (mV/min) in Presence of Oxygen or Carbon Monoxide in Nitrogen Carrier Gas

A Shottky diode MIS hydrogen sensor containing an alumina insulator and a palladiun/silver metal gate was fabricated and tested for hydrogen sensitivity in nitrogen containing oxygen and carbon monoxide. The sensor temperature was controlled at 143° C. for these tests. Table II shows the response of the sensor to hydrogen in nitrogen as Test 1. The response was significantly lower in the presence of low concentrations of oxygen (Test 2) or carbon monoxide (Test 3).

TABLE II

Hydrogen Sensor Response (mV/min) in Presence of Oxygen and Carbon Monoxide in Nitrogen Carrier Gas

		Gas Phase Hydrogen Concentration (ppm)		
Test	Conditions	0.1	1	10
1	Control	49	252	2173
2	0.5% O_2	2.9	38.2	546.5
3	0.1% CO	−6.3	34.8	87.9

EXAMPLE 3

Removal of Oxygen and Carbon Monoxide from Carrier Gas

Oxygen and carbon monoxide removal from nitrogen carrier gas was tested with different compositions capable of removing oxygen and carbon dioxide, and gaseous hydrogen concentrations were monitored. The ascorbic acid-based

preparation named Anaeropack manufactured by Mitsubishi Gas Chemical Corporation (MGC) America, Inc. (New York, N.Y.) was used for oxygen scavenging and the copper oxide-based preparation named Catalyst R3–11 manufactured by BASF Corporation was used for carbon monoxide scavenging. Anaeropack was used as purchased and was placed in a plastic module through which carrier gas flowed. Catalyst R3–11 was used as purchased and was placed in a brass pipe through which carrier gas flowed and heated to a constant temperature of 70° C. A 500-milliliter volume of nitrogen carrier gas containing oxygen was circulated and gas samples were collected and analyzed on a gas chromatograph for oxygen and on a reduction gas analyzer for hydrogen and carbon monoxide.

Table III shows results for a control test (Test 1) where no scavengers were used, a second test (Test 2) where only the oxygen scavenger was used, and a third test (Test 3) where both scavengers were used. The results show that oxygen was not removed in Test 1. Oxygen was removed to 0% in Test 2 and hydrogen did not increase significantly. The carbon monoxide concentration did increase significantly due to reaction of oxygen with the oxygen scavenging preparation. Test 3 shows that in the presence of both scavengers oxygen and carbon monoxide were both removed. During Test 3 hydrogen did not increase significantly.

TABLE III

Removal of Oxygen and Carbon Monoxide from Carrier Gas

		Concentration					
		Oxygen (%)		Hydrogen (ppm)		Carbon Monoxide (ppm)	
Test	Conditions	Initial	Final	Initial	Final	Initial	Final
1	Control	2.6	2.9	1.87	1.97	1.2	1.3
2	O_2 Scavenger	2	0	0.23	0.25	1.6	15
3	O_2 & CO Scavengers	2	0	0.18	0.21	0.65	0

EXAMPLE 4

Effect Of Water On Carbon Monoxide Removal by Catalyst R3–11

The effect of water on carbon monoxide removal by copper oxide-based Catalyst R3–11 was tested. A quantity of R3–11 was placed in a steam autoclave and treated for 15 minutes at 121° C. to saturate the catalyst with water vapor. The catalyst was then placed in a brass module through which gas flowed and was heated to 70° C. A 10-milliliter volume of nitrogen carrier gas was circulated through the heated catalyst and 0.1 milliliter of carbon monoxide was injected into the carrier gas. Carbon monoxide concentration was monitored over time. Table IV shows that carbon monoxide concentration did not decrease significantly over four minutes. A control test where new Catalyst R3–11 was used and was not treated in the autoclave demonstrated significant removal of carbon monoxide from the carrier gas in less than four minutes as shown in Table IV.

TABLE IV

Effect of Water on Carbon Monoxide Concentration (ppm) in Presence of Catalyst R3-11

	Time (minutes)			
Condition	0	2	2.5	4
Control	2,900	14	—	1.3
Water	1,200	—	610	530

In practice, water removal from carrier gas is preferred because of humidity that is created during equilibration of groundwater with the carrier gas in the hollow fiber membrane module, and because the ascorbic acid-based oxygen removal preparation is moist and releases moisture during use. Use of drying agents such as molecular sieves have proven to be useful in this regard. Tests using Catalyst R3–11 in combination with 13× molecular sieves to remove water from carrier gas show that carbon monoxide removal is sustained for at least 20 cycles of oxygen removal. Use of Catalyst R3–11 in the absence of 13× molecular sieves results in dramatic reduction of carbon monoxide removal capability within two to three cycles.

EXAMPLE 5

Analysis of Groundwater Containing Dissolved Hydrogen

Groundwater containing dissolved hydrogen was analyzed using dissolved hydrogen analyzer **38** depicted in FIG. 1 and results were compared to the bubble strip/reduction gas analyzer method. The groundwater was removed from a former manufacturing facility contaminated with chlorinated hydrocarbons. cis-1,2-Dichloroethene (cDCE) and vinyl chloride (VC) are the predominant contaminants present in groundwater. Groundwater samples were collected using a pneumatic bladder pump at a volumetric flow rate of 1,000 milliliters per minute. The actual dissolved hydrogen concentrations were as shown in Table V. Hydrogen analyzer **38** was operated with Stage A (sensor preparation) for 2 minutes, Stage B (nitrogen purge) for 1 minute, Stage C (hydrogen equilibration) for 3 minutes, Stage D (carrier gas preparation), and Stage E (measurement). Catalyst R3–11 was operated at 70° C. The sensor was operated at 117° C. for these tests. Table V shows analyzer **38** was capable of measuring dissolved hydrogen with a percent error ranging from –6.2% to 14%.

TABLE V

Hydrogen Analyzer Results with Groundwater Samples

	Hydrogen Concentration (nM)		
Test	Actual	Analyzer	Difference (%)
1	1.4	1.6	14.3%
2	0.96	1	4.2%
3	0.96	0.9	-6.2%

While the preferred embodiment of the invention has been illustrated and described, it will be appreciated that various changes can be made therein without departing from the spirit and scope of the invention.

The embodiments of the invention in which an exclusive property or privilege is claimed are defined as follows:

1. A hydrogen analyzer comprising in gaseous communication:

a mass transfer unit, having a liquid portion and a gaseous portion, through which hydrogen gas is transferred from a liquid analyte to a carrier gas;

a gas equilibrium reservoir within which hydrogen gas transferred from the analyte is equilibrated;

an oxygen unit for removal of oxygen from the carrier gas containing hydrogen;

a hydrogen sensor for measuring the amount of hydrogen in the carrier gas from which oxygen has been removed, wherein the hydrogen sensor is capable of detecting hydrogen in carrier gas equilibrated with hydrogen dissolved in an aqueous medium at a concentration of on the order of 0.1 nM; and

a pump for moving the carrier gas through the mass transfer unit, gas equilibrium reservoir, oxygen unit and hydrogen sensor, all of which are connected in fluid flow communication.

2. The hydrogen analyzer of claim **1**, further comprising a carbon monoxide unit for removal of carbon monoxide from the carrier gas containing hydrogen.

3. The hydrogen analyzer of claim **2**, further comprising a sulfur unit for removing sulfur compounds from the carrier gas containing hydrogen.

4. The hydrogen analyzer of claim **1**, further comprising a sulfur unit for removing sulfur compounds from the carrier gas containing hydrogen.

5. A hydrogen analyzer comprising in gaseous communication:

a mass transfer unit, having a liquid portion and a gaseous portion, through which hydrogen gas is transferred from a liquid analyte to a carrier gas;

a gas equilibrium reservoir within which hydrogen gas transferred from the analyte is equilibrated;

an oxygen unit for removal of oxygen from the carrier gas containing hydrogen;

a hydrogen sensor for measuring the amount of hydrogen in the carrier gas from which oxygen has been removed;

a pump for moving the carrier gas through the mass transfer unit, gas equilibrium reservoir, oxygen unit and hydrogen sensor, all of which are connected in fluid flow communication;

a carbon monoxide unit for removal of carbon monoxide from the carrier gas containing hydrogen; and

a sulfur unit for removing sulfur compounds from the carrier gas containing hydrogen, wherein the sulfur and carbon monoxide removal units comprise a unit including a composition that is capable of removing both carbon monoxide and sulfur compounds from the carrier gas.

6. The hydrogen analyzer of claim **5**, wherein the gas equilibrium reservoir is defined by the sulfur and carbon monoxide removal unit.

7. The hydrogen analyzer of claim **5**, wherein the carbon monoxide and sulfur compound removal composition is catalyst R3–11.

8. The hydrogen analyzer of claim **7**, further comprising a heater coupled to heat the carrier gas containing hydrogen to a temperature of 55° C. to 80° C. as the carrier gas flows through the carbon monoxide unit.

9. The hydrogen analyzer of claim **6**, further comprising a moisture removal unit for removing moisture from the carrier gas.

10. The hydrogen analyzer of claim **9**, wherein the moisture removal unit further comprises a moisture-removal composition selected from the group consisting of molecular sieves and a calcium sulfate preparation.

11. The hydrogen analyzer of claim **6**, wherein the carbon monoxide and sulfur compound removal composition is a catalyst preparation comprising magnesium dioxide, copper oxide and aluminum oxide.

12. A hydrogen analyzer comprising in gaseous communication:

a mass transfer unit, having a liquid portion and a gaseous portion, through which hydrogen gas is transferred from a liquid analyte to a carrier gas;

a gas equilibrium reservoir within which hydrogen gas transferred from the analyte is equilibrated;

an oxygen unit for removal of oxygen from the carrier gas containing hydrogen;

a hydrogen sensor for measuring the amount of hydrogen in the carrier gas from which oxygen has been removed;

a pump for moving the carrier gas through the mass transfer unit, gas equilibrium reservoir, oxygen unit and hydrogen sensor, all of which are connected in fluid flow communication;

a carbon monoxide unit for removal of carbon monoxide from the carrier gas containing hydrogen; and

a heater coupled to heat the carrier gas containing hydrogen as the carrier gas flows through the carbon monoxide unit.

13. A hydrogen analyzer comprising in gaseous communication:

a mass transfer unit, having a liquid portion and a gaseous portion, through which hydrogen gas is transferred from a liquid analyte to a carrier gas, wherein the mass transfer unit is selected from the group consisting of a hollow fiber gas transfer module and a sparger;

a gas equilibrium reservoir within which hydrogen gas transferred from the analyte is equilibrated;

an oxygen unit for removal of oxygen from the carrier gas containing hydrogen;

a hydrogen sensor for measuring the amount of hydrogen in the carrier gas from which oxygen has been removed;

a pump for moving the carrier gas through the mass transfer unit, gas equilibrium reservoir, oxygen unit and hydrogen sensor, all of which are connected in fluid flow communication.

14. A hydrogen analyzer comprising in gaseous communication:

a mass transfer unit, having a liquid portion and a gaseous portion, through which hydrogen gas is transferred from a liquid analyte to a carrier gas;

a gas equilibrium reservoir within which hydrogen gas transferred from the analyte is equilibrated;

an oxygen unit for removal of oxygen from the carrier gas containing hydrogen, wherein the oxygen removal unit comprises an oxygen removal composition;

a hydrogen sensor for measuring the amount of hydrogen in the carrier gas from which oxygen has been removed; and

a pump for moving the carrier gas through the mass transfer unit, gas equilibrium reservoir, oxygen unit and hydrogen sensor, all of which are connected in fluid flow communication.

15. The oxygen removal component of claim **14**, wherein the oxygen removal unit is an ascorbic acid derivative.

16. The hydrogen analyzer of claim 14, wherein the hydrogen sensor comprises a metal oxide semiconductor.

17. A hydrogen analyzer comprising in gaseous communication:

a mass transfer unit, having a liquid portion and a gaseous portion, through which hydrogen gas is transferred from a liquid analyte to a carrier gas;

a gas equilibrium reservoir within which hydrogen gas transferred from the analyte is equilibrated;

an oxygen unit for removal of oxygen from the carrier gas containing hydrogen;

a hydrogen sensor for measuring the amount of hydrogen in the carrier gas from which oxygen has been removed, wherein the hydrogen sensor is selected from the group consisting of a Shottky diode and a field effect transistor; and

a pump for moving the carrier gas through the mass transfer unit, gas equilibrium reservoir, oxygen unit and hydrogen sensor, all of which are connected in fluid flow communication.

18. A hydrogen analyzer comprising in gaseous communication:

a mass transfer unit, having a liquid portion and a gaseous portion, through which hydrogen gas is transferred from a liquid analyte to a carrier gas;

a gas equilibrium reservoir within which hydrogen gas transferred from the analyte is equilibrated;

a carbon monoxide unit for removal of carbon monoxide from the carrier gas containing hydrogen;

an oxygen unit for removal of oxygen from the carrier gas containing hydrogen;

a sulfur unit for removing sulfur compounds from the carrier gas containing hydrogen;

a moisture unit for removing moisture from the carrier gas;

a hydrogen sensor for measuring the amount of hydrogen in the carrier gas from which carbon monoxide, oxygen, sulfur compounds and moisture have been removed, said hydrogen sensor being capable of detecting hydrogen in carrier gas equilibrated with hydrogen dissolved in an aqueous medium at a concentration of on the order of 0.1 nM; and

a pump for moving the carrier gas through the mass transfer unit, gas equilibrium reservoir, carbon monoxide, oxygen, sulfur and moisture units and hydrogen sensor, all of which are connected in fluid flow communication.

19. A hydrogen analyzer comprising in gaseous communication:

a mass transfer unit, having a liquid portion and a gaseous portion, through which hydrogen gas is transferred from a liquid analyte to a carrier gas;

a gas equilibrium reservoir within which hydrogen gas transferred from the analyte is equilibrated;

an oxygen unit for removal of oxygen from the carrier gas containing hydrogen that neither produces nor consumes hydrogen;

a hydrogen sensor for measuring the amount of hydrogen in the carrier gas from which oxygen has been removed; and

a pump for moving the carrier gas through the mass transfer unit, gas equilibrium reservoir, oxygen unit and hydrogen sensor, all of which are connected in fluid flow communication.

* * * * *