NSTD-06-166

Moving Belt Metal Detector (MBMD)

SEED Project MM-1448
Final Report

March 2006

Carl V. Nelson
Deborah P. Mendat
Toan B. Huynh

Task No: SE106
Contract No: W912HQ-05-C-0007

The Johns Hopkins University
APPLIED PHYSICS LABORATORY

11100 Johns Hopkins Road
Laurel, MD 20723

Distribution Statement A: Approved for Public Release, Distribution is Unlimited

This report was prepared under contract to the Department of Defense Strategic Environmental Research and Development Program (SERDP). The publication of this report does not indicate endorsement by the Department of Defense, nor should the contents be construed as reflecting the official policy or position of the Department of Defense. Reference herein to any specific commercial product, process, or service by trade name, trademark, manufacturer, or otherwise, does not necessarily constitute or imply its endorsement, recommendation, or favoring by the Department of Defense.

This page intentionally blank.

CONTENTS

Contents ii

List of Figures iii

1 Introduction 4

2 Sensor Concept 5

3 System Description 7

3.1 Mechanical Design 8
3.2 Electronic Design 9
3.3 System Operation 12

4 Test Results 13

5 Discussion and Conclusion 14

6 Recommendations 16

6.1 Mechanical System 17
6.2 Electronics 17
6.3 RF telemetry 17
6.4 Firmware 18
6.5 Ground Sensing 18

Acknowledgements 18

Publications 18

References 19

Abbreviations and Acronyms 20

LIST OF FIGURES

Figure 1 MBMD design concept..... 6

Figure 2 Comparison of MBMD sensor array (A) to single sensor (B) moving at 10 m/s. 7

Figure 3 Simplified mechanical drawing of the laboratory prototype MBMD. 8

Figure 4 Laboratory prototype MBMD. 9

Figure 5 Simplified electronics block diagram of prototype MBMD..... 9

Figure 6 MDDCs mounted on the MBMD 10

Figure 7 Details of Data Collection Subsystem 11

Figure 8 Data control and collection system..... 12

Figure 9 Simplified MBMD operation diagram. 12

Figure 10 Conventioanl scanning MD response as a function of speed. 13

Figure 11 Comparison of MBMD and conventional scanning MD response as a function of normalized speed. 14

1 INTRODUCTION

The Johns Hopkins University Applied Physics Laboratory (JHU/APL) has developed a prototype metal detection survey system that will increase the search speed of conventional technology while maintaining high sensitivity. Higher search speeds will reduce the time to locate unexploded ordnance (UXO) at Base Realignment and Closure (BRAC) sites, thus potentially reducing remediation costs. The new survey sensor system is called the moving belt metal detector (MBMD) [1] and operates by both increasing sensor speed over the ground while maintaining adequate sensor dwell time over the target for good signal-to-noise ration (SNR) and reducing motion-induced sensor noise. The MBMD uses an array of metal detection sensors mounted on a flexible belt similar to a tank track. The belt motion is synchronized with the forward survey speed so individual sensor elements remain stationary relative to the ground. In the prototype MBMD, a single pulsed transmitter coil is configured to provide a uniform magnetic field along the length of the receivers in ground contact. Individual time-domain electromagnetic induction (EMI) receivers are designed to sense a single time-gate measurement of the total metal content. Each sensor module consists of a receiver coil, amplifier, digitizing electronics and a low power UHF wireless transmitter. This report presents the survey system design concepts, details of the prototype system, metal detection data from at several survey speeds and recommendations for future work. Although the laboratory prototype is designed to demonstrate metal detection survey speeds up to 10 m/s, higher speeds are achievable with a larger sensor array. In addition, the concept can be adapted to work with other sensor technologies not previously considered for moving platforms.

BRAC site remediation generally starts with the detection of buried metallic anomalies that are potential UXO. Typically, the metallic anomalies are located by conducting large-scale geophysical surveys of the contaminated sites with either “mag and flag” operations or towed sensor systems. Towed sensor systems fall into two general categories: hand-towed [2] or vehicle-towed sensor carts [3]. The speed of the hand-towed sensor cart is limited to walking speeds of about 1m/s, while the speed of a vehicle-towed sensor array is limited to about 1.5 to 2.0 m/s. Typically, the vehicle tow survey speed is limited by the need for high spatial resolution of target signatures, adequate data collection sensor SNR requirements, and motion-induced sensor noise on rough terrain. High spatial resolution and good SNR of target signatures allow for the possibility of inversion of the signature data for accurate target depth and classification estimation. The MBMD is estimated to improve data collection survey speed by a factor of 5 to 10 over a conventional vehicle-towed metal detector (MD) array.

To demonstrate the potential advantage of a fast UXO survey system we can develop an estimate for the time to survey a BRAC site with a conventional vehicle-towed MD array. Consider a survey of a 40 acre (1.6 x 105 m2) remediation site using a 3 m wide array. If there are no overlapping lanes and the array moves at 1.5 m/s, it would take about 10 hours to conduct the survey. Surveying the estimated 20 million acres contaminated with UXO (81x 109 m2) [4] with a conventional vehicle-towed MD array would require approximately 560 years operating continuously with no overlapping lanes, or about 2500 years at 8 hours per day with 50% overlapping lanes. Even with multiple sensor systems, there remains the need to reduce UXO remediation site survey time

Like all sensors, metal detectors are characterized by a response time. A sensor response time is the time it takes for the sensing hardware to respond to the measurement parameter and to sample, integrate, and/or process the resulting signal. A typical MD sensor response time is relatively fast compared to a walking person searching for metal objects; the sensor's response time does not limit the metal detection survey speed. However, in a vehicle-towed sensor system, the survey vehicle speed must not exceed the data collection response time of the MD sensor system. A slow sensor data collection response time results in a slow survey speed.

Some MD sensors are adversely influenced by vehicle-induced motion noise [2]. Advanced signal processing and/or mechanical stabilization techniques may be required to use these types of sensors on a moving platform in rough terrain. One implementation of the MBMD technique places the MD sensor in stationary contact with the ground (another implementation has the sensor belt speed synchronized with the ground speed without direct contact). Some MD technologies are adversely impacted by sensor motion in the earth's magnetic field, which generate spurious signals. Since sensor data are collected during a time when the MD sensing elements are stationary with respect to the ground (earth fixed coordinate system), these spurious signals are potentially not present in the MBMD technique.

In addition to the survey speed and cart motion issues described above, a UXO's time response affects measurement time and classification potential. After a MD's transmitter pulse excites the UXO, the MD receiver must collect data over many milliseconds to accurately capture the UXO's eddy current time decay signature. On a fast moving vehicle-towed sensor system, the MD sensor may not be able to dwell over the target long enough to collect the eddy current time decay signature accurately at high SNR. The MBMD technique allows the sensor to dwell over the UXO for a longer period of time compared to a conventional sensor, thus improving the late time performance of the time decay measurement.

A prototype, laboratory proof-of-concept MBMD system is described in this report. The MBMD concept and its advantage over a conventional sensor are briefly described. Several design approaches and the detailed design of the prototype sensor are then presented. We next present preliminary laboratory test results comparing the MBMD concept to a conventional sensor. Finally, a short discussion is presented on the important design and operational issues discovered in this preliminary study. These design and operational issues would need to be addressed in a potential full scale, fieldable MBMD development effort.

2 SENSOR CONCEPT

The MBMD, shown conceptually in Figure 1, is an array of metal detector sensors integrated onto a movable, flexible belt. The sensor belt is mounted on a cart that can be either towed or self-propelled. There are two potential configurations of the MBMD: (1) the sensor belt can be in contact with the ground, or, (2) the sensor belt's motion can be synchronized with the cart speed over the ground so that the individual sensor elements are stationary with respect to the ground. With the MD array in contact with the ground, the sensor elements are stationary with respect to the ground minimizing cart-induced sensor motion. The MD is stationary over a target for the length of the belt on the ground. The length of the sensor belt in contact with the ground can be tailored for a given MD sensor's response time and cart speed. The MBMD concept

could have applications beyond the scope of this paper. For example, it could support advanced sensor technology not previously considered for moving platform applications.

Comparing all of the sensor and data collection system properties of a MBMD with those of a single moving MD sensor is beyond the scope of this paper. Complex issues such as the convolution of a MD spatial and time response with a non-uniform sensing volume typical of EMI metal detectors, and X, Y, Z cart-motion-induced sensor noise are not discussed. However, we can better understand the advantage of the MBMD concept by considering an idealized one-dimensional sensor comparison shown in Figure 2. In Figure 2a, we assume the MBMD has a 1 m long sensor track, three 33 cm diameter sensors in contact with the ground, and a 0.1 s data collection time (one data point). Cart motion is from left to right over a buried target at position T. At a cart speed of 10 m/s, each sensor in the array is in contact with the ground for 0.1s before the belt lifts it off the ground for the return travel. As shown in the figure, sensor B is stationary directly over the target for the full 0.1s data collection time. For a given sensor response time, the length of the sensor track controls the data collection speed.

Now consider the case of a single 33 cm diameter sensor mounted on a moving cart as shown in Figure 2b. We assume that the single sensor has a response time of 0.1s and moves at 10 m/s. In 0.1 seconds, the single sensor moves 1 m from the starting point 1 to point 2 over the target at T. As the sensor moves over the target, it collects data from many different aspect angles over the target. Its response signal may not be an accurate representation of the true target response.

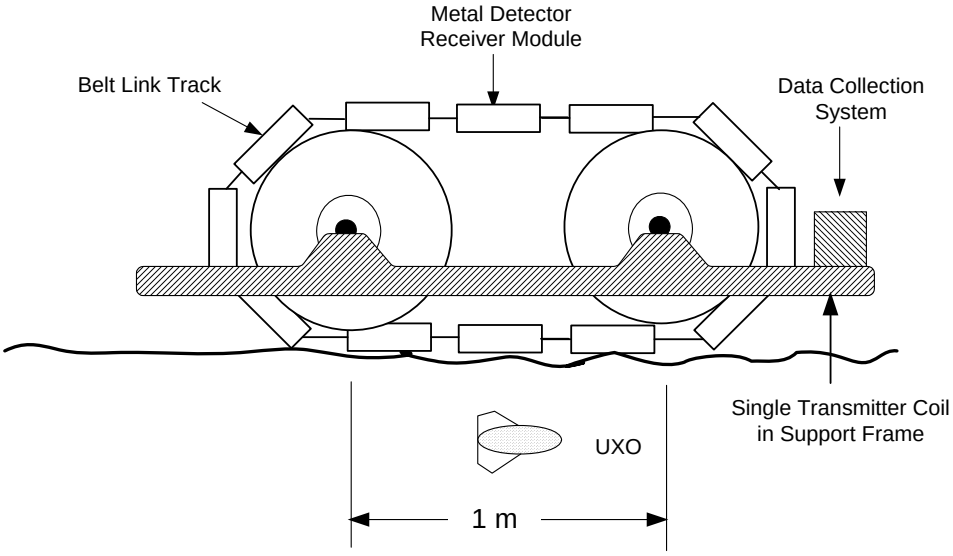

Figure 1 MBMD design concept.

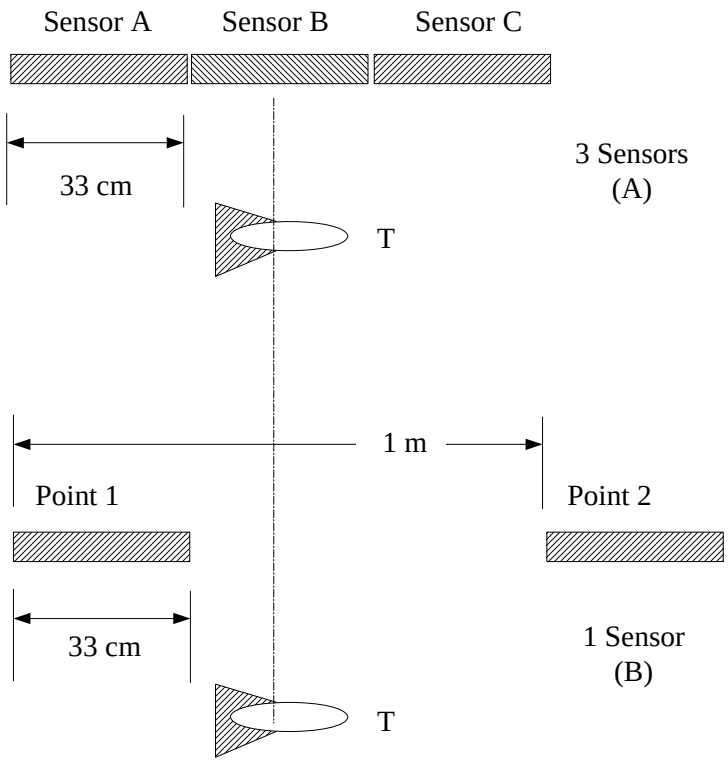

Figure 2 **Comparison of MBMD sensor array (A) to single sensor (B) moving at 10 m/s.**

3 SYSTEM DESCRIPTION

There are several design approaches for each aspect of the MBMD concept. With respect to the MD technology, we could have purchased a number of individual metal detectors and attached them directly to the track/belt system. The signals from each MD could then have been routed through a hardwired slip ring assembly to a data collection computer. Either frequency or time domain type MD could have been selected for this application. However, this approach would have required each individual MD to be synchronized with the others, so that each transmitter would not interfere with the other receivers. Reverse engineering of existing commercial MD technology and efforts to synchronize 18 metal detectors were deemed risky and time-consuming. Since APL has experience building time-domain MD [5] we decided to construct our own synchronized MD.

The next choice was whether to build 18 self-contained, synchronized MD with individual transmitter and receiver coils, or to use a common transmitter coil fixed to the MBMD frame together with individual MD receiver coils placed on the belt. We selected the latter option, since the transmitter is the single most power-intensive component of the MBMD concept. Placing the transmitter on the fixed frame avoided the need to construct a slip ring assembly to power individual MD transmitters.

One of the major mechanical design choices was what type of belt system were we going to use to support the MD receiver coils. The two main approaches were: (1) a belt made from a flexible

material like neoprene rubber with embedded receiver circuits or, (2) a belt constructed like tank tracks with rigid links connected by flexible joints. The first approach had the attraction of an elegant design with few mechanical parts to breakdown. However, a flexible belt MD receiver system is a new technology and we felt the risks, on a limited budget and tight development schedule, precluded this approach. We instead selected the second option; a conventional tank-thread type tracks with individual links.

3.1 MECHANICAL DESIGN

Figure 3 shows a simplified mechanical drawing of the laboratory prototype MBMD. The mechanical system is composed of:

- A stationary support frame made from wood and fiberglass bolts
- Target support shelf
- Two track support drums (66 cm diameter) with large gear teeth
- A continuous loop, tank-tread type track composed of eighteen links made of plywood, nylon webbing and plastic bolts
- Eighteen printed circuit board (PCB) Metal Detector Receiver Modules (MDRM) consisting of the metal detector receiver and metal detector data collection (MDDC) subsystems
- Plastic pipe axles (PVC)
- A stationary 10-turn transmitter coil

The stationary support frame is 1.8 m tall and 2 m long. Each track link measures 38 cm by 38 cm. The continuous track is supported by the track support drums. Each MDDC subsystem is composed of a 33 cm square PCB with electronics at the center and a receiver coil along the edges of the PCB. The MDDC subsystem is attached to a track link with nylon bolts. The nylon webbing is attached to each track link and forms a flexible coupling between the links. The drums and track links spin freely on the PVC plastic pipe axles and are turned manually. The lower portion of the track between the two drums is supported by several pieces of straight wood. A target support shelf is located about 10 cm below the lower track.

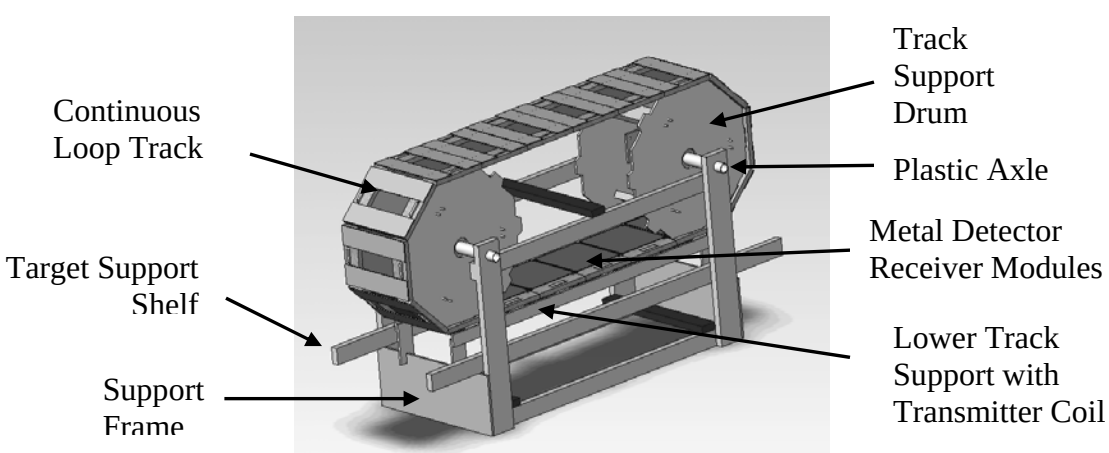

Figure 3 Simplified mechanical drawing of the laboratory prototype MBMD.

Figure 4 shows a picture of the laboratory prototype MBMD. Eight MDRM are attached to the track links. The picture also shows the transmitter antenna.

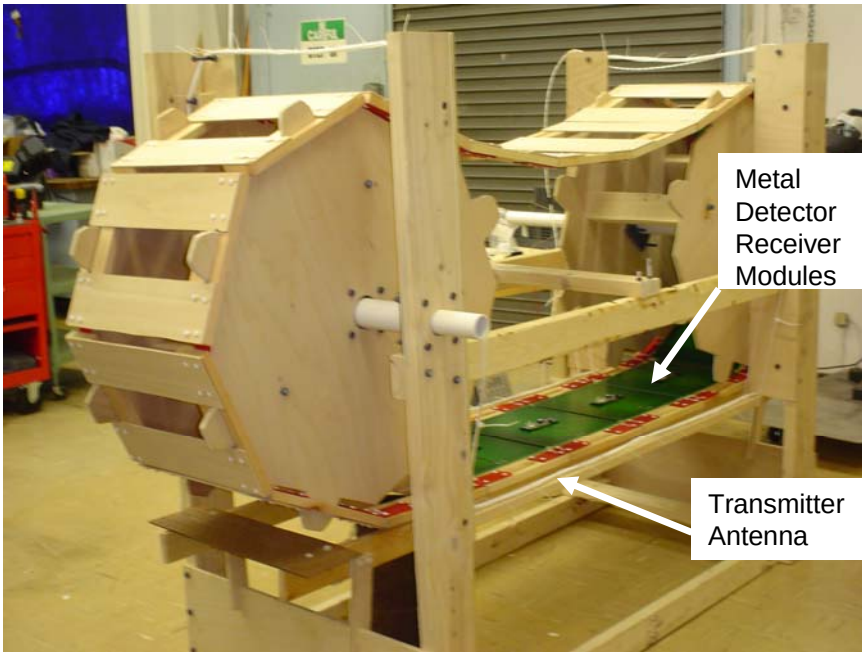

Figure 4 Laboratory prototype MBMD.

3.2 ELECTRONIC DESIGN

Figure 5 shows a simplified block diagram of the electronic system of the MBMD. The prototype MBMD system was designed for 18 MDRM, a single data collection sampling time and a fixed speed of 10 m/s. Although all system parameters could have been user programmable or automatically set by the system based on the speed of rotation of the belt, these

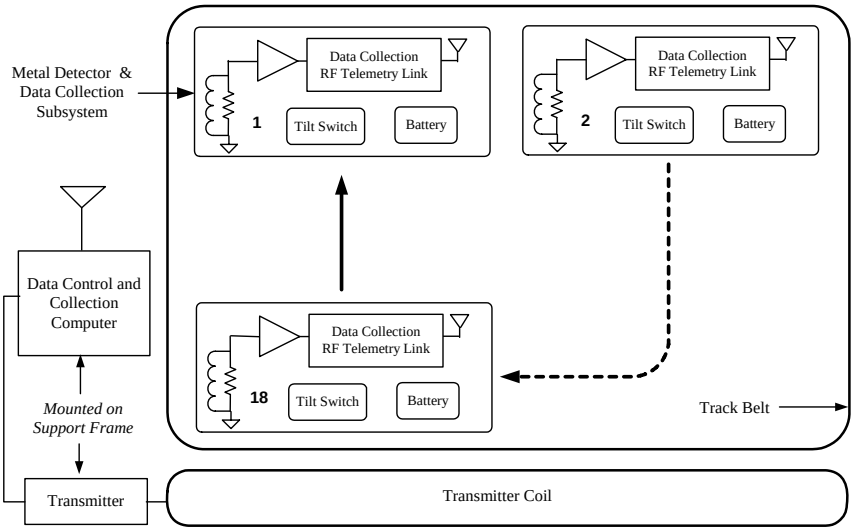

Figure 5 Simplified electronics block diagram of prototype MBMD.

parameters were fixed in the firmware for simplicity and speed of development. The electronic system is composed of:

- Eighteen MDRM
- Data control and collection system
- RF telemetry link between MDDC and data control and collection system
- A pulsed inductive transmitter circuit
- A transmitter coil antenna
- Laptop computer

The 18 MDDC subsystems were mounted directly on the belt links with no electrical connections to the stationary support frame. Since each subsystem was battery operated, each was designed with low-power circuitry. Figure 6 shows several MDRM and Figure 7 is a close-up of the data collection subsystem with the RF telemetry link, tilt switch, battery and microcontroller. Each of the 18 MDRM consists of:

- A receiver coil
- An amplifier/integrator
- An analog-to-digital converter (ADC)
- A microcontroller
- RF telemetry link
- Tilt switch
- Battery

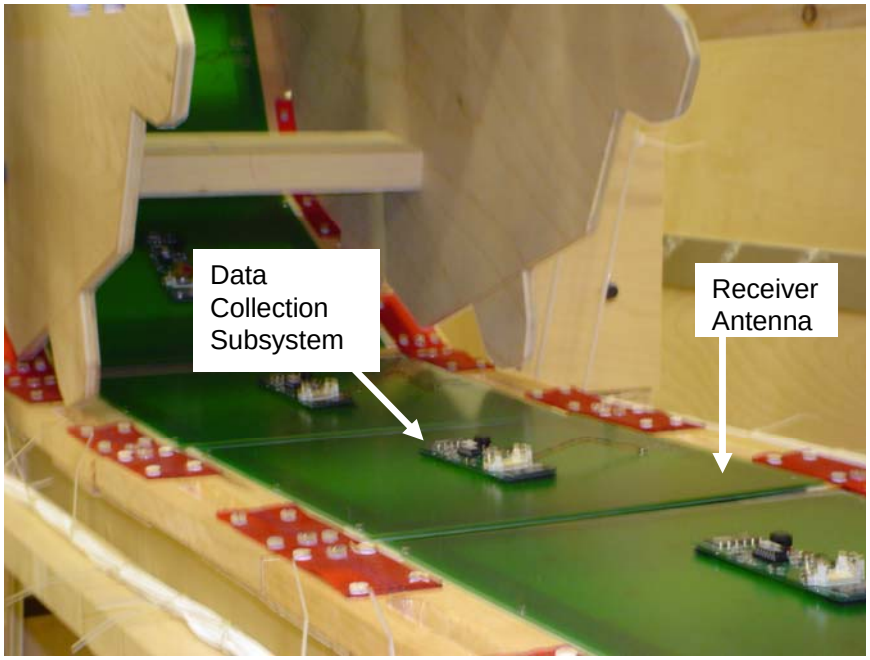

Figure 6 MDDCs mounted on the MBMD

The 20-turn square PCB receiver coil measures 30 cm on a side. The receiver coil output is connected to an LMV-722M low noise, low power, low voltage dual op amp. The input to the

first stage of the amplifier is protected with diodes so that the large inductive voltage spike of the transmitter coil turn off transient does not damage the amplifier circuitry. The first stage of the amplifier is configured with a gain of 100, and the second stage of the amplifier is configured as an integrator.

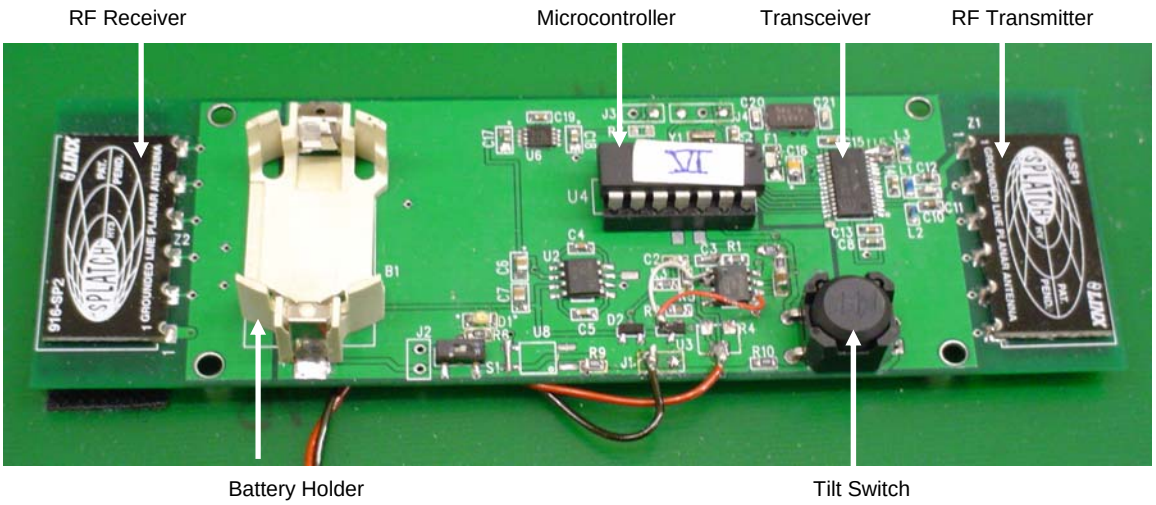

Figure 7 Details of Data Collection Subsystem

The output of the amplified receiver coil signal is fed to the input of a 10-bit ADC embedded in a CMOS Flash-based 8-bit microcontroller (Microchip PIC16F676). Conversion speed of the ADC is 1.6 μs. The microcontroller controls the operation of the ADC, uses software to integrate the MD signals, and transmits the MD data to the stationary data collection system via the RF link. Software integration results in a data point every 100 ms.

The RF link is composed of two Chipcon CC1000 ultra-low-power, short-range CMOS single-chip UHF RF transceivers. One CC1000 is configured as a receiver operating at 916 MHz, and a second CC1000 is configured as a 416 MHz transmitter. The data rate for the RF links is 38.4 kbps.

In order for the MDDC to collect target data only during ground contact, the MDDC needs to detect where it is relative to the ground. Several options were investigated. For speed and simplicity of development, we selected an optical tilt switch (NKK DS-B1P) to perform this task. When a MDDC is on the top part of the rotation cycle, the MDDC boards are upside down. The title switch sends a signal to the microcontroller that indicates that the MDDC is not ready to take data. When the MDDC rotates around to a position close to the ground (30 degrees from horizontal) a signal from the tilt switch is sent to the microcontroller that the MDDC is ready to start taking data. Data is not collected immediately but is delayed based on the rotation speed of the belt. In this prototype system, this delay is user programmed. Typically, at a speed of about 10 m/s, a delay of about 1 data collection cycle is needed before the MDDC board is level and target data are collected.

Since the MDDCs are to be operated by batteries, all components in the design were selected to have minimum power consumption. We selected as the primary power source a 3V ion-lithium battery. The battery power was regulated with high efficiency DC/DC converters.

Figure 8 shows the cart-mounted Data Control and Collection System.

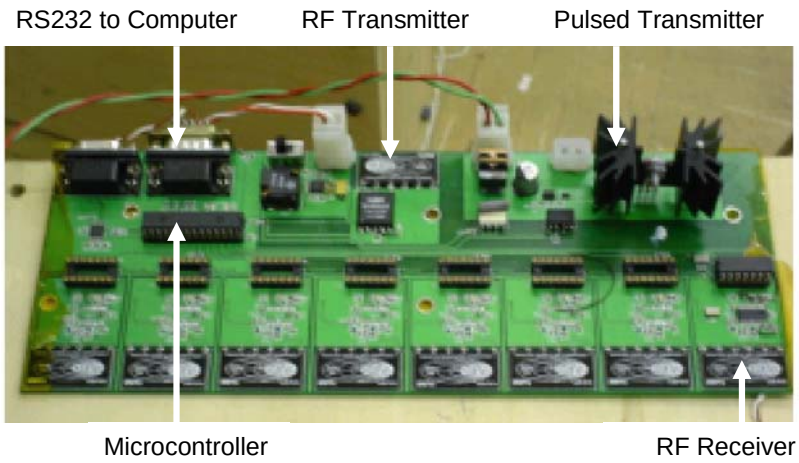

Figure 8 Data control and collection system.

3.3 SYSTEM OPERATION

A simplified diagram of the MBMD operation is shown in Figure 9. Starting at point A in the diagram, as a MDRM moves from a vertical to a horizontal position the tilt switch activates and the data collection operation is started. During the data collection period, the MDDC is on the ground and collecting target data. At point B, the tilt switch starts to move to a vertical position at which time it de-activates. At this point, the MDDC goes into a data transmission operation. During the data transmission operation, data collection is stopped, the MDDC data transmitter is powered on and data are sent to the data collection system on the support frame. After all data are transferred to the data collection system, the MDDC powers down the data transmitter to conserve power. While the MDDC is upside down on the return path, it is not collecting data.

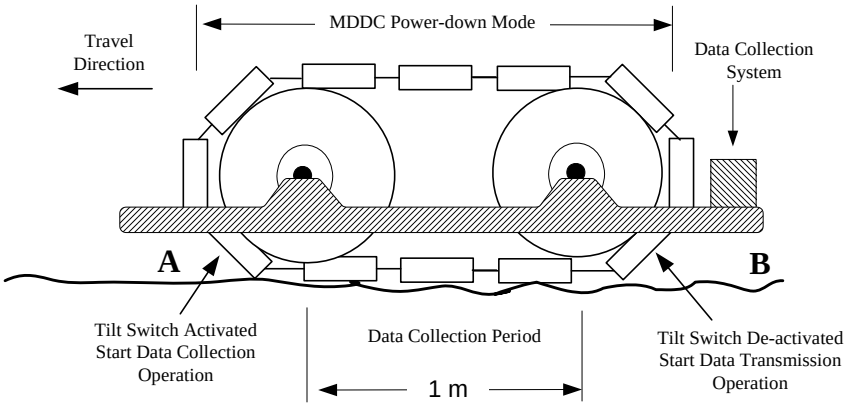

Figure 9 Simplified MBMD operation diagram.

4 TEST RESULTS

To validate the MBMD concept, we compared its response to that of a conventional MD as constructed from a modified MDRM. The MDDC was modified to act as a stand-alone MD with the same time constant as a MBMD sensor. Figure 10 compares the response to a metal target of a conventional scanning MD as a function of scan speed. We placed a metal target (20 cm steel disc) on a wooden stand and the MD and moved the modified MDRM across the target. The output of the MD was collected with the data collection system of the MBMD system. The fastest speed we were able to reach with this arrangement was about 2 m/s. Trace A shows MD data collected at a low speed of about 0.5 m/s. The waveform clearly shows the target response voltage going from about 1.5 V to about 1.18 V. At 1.18 V the MD output plateaus at a maximum voltage for a few tenths of a second. Trace B shows MD data collected at about 1.5 m/s. At the higher speed the waveform clearly shows a reduced response from the MD: The output voltage goes from about 1.46 V to about 1.22 V. Trace B has almost no plateau at 1.22 V before the response goes back up to about 1.46 V.

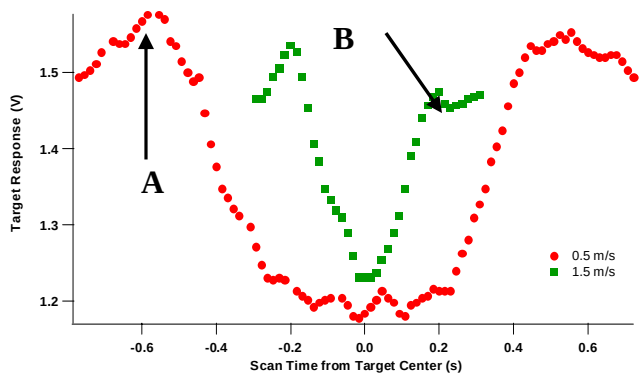

Figure 10 Conventioanl scanning MD response as a function of speed.

The laboratory MBMD prototype was designed with a target support shelf (Figure 3). The objective was to have a metal target placed on the support shelf and have its motion synchronized with the belt mounted MD sensor. This technique proved to be difficult to reliably implement. Since the objective was to have the target and MD stationary with respect to each other, we decided to attach the target directly to MD belt. Physically, the two approaches accomplish the same objective.

The MBMD prototype was turned manually. Due to the simple, low-cost mechanical construction of the MBMD support frame, belt alignment problems caused the system to jam at speeds greater than about 2 m/s. Although the MBMD timing was designed for 10 m/s, the electronics still functioned at the 2 m/s level. Therefore, our testing was conducted at these lower speeds.

Figure 11 shows a comparison the MBMD and the conventional scanning MD. Normalized MD output is plotted against normalized speed. The plot clearly shows that, as speed increases, the amplitude of the stationary MD falls while the amplitude of the MBMD remains constant.

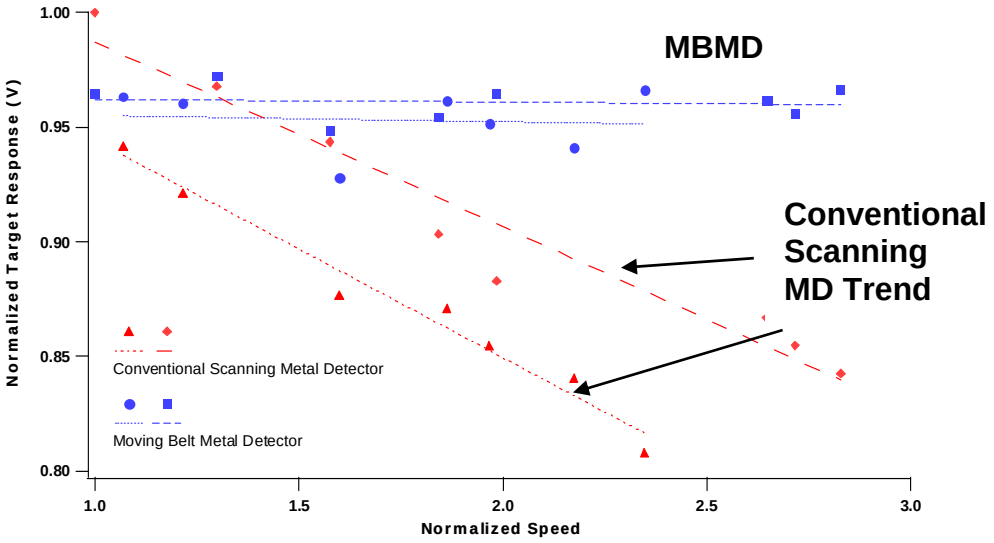

Figure 11 Comparison of MBMD and conventional scanning MD response as a function of normalized speed.

5 DISCUSSION AND CONCLUSION

The results of Figure 10 and Figure 11 show the obvious: A single sensor, with a response time slower than the scan speed, will not measure a correct response from a target. Conversely, a single sensor allowed to sit stationary over a target for a time greater than the sensor response time will measure a correct response from the target. However, the objective of this study was not to prove the obvious, but to demonstrate, via construction of a laboratory proof-of-concept MBMD prototype, that such a system is feasible to construct and that there are no major technological issues to impede further MBMD development. The MBMD speed is limited only by the time-response of the MD and the length of the track/belt that is on the ground. Compared to a conventional towed-vehicle system, the MBMD has the potential to reduce the time required to survey a site by a factor of 5 to 10. Because the concept places the sensor in a fixed earth reference frame during the sensor's measurement time, improved sensor performance may be realized through reduced motion-induced noise and increased signal processing averaging time. Conventional ensemble averaging, or adaptive signal processing, could be applied to sensor data. In addition, extra target dwell time would allow computer processors to do computationally intensive real-time detection and target classification.

The discussion of the MBMD concept has primarily focused on the stationary nature of the individual receivers over a buried target. The MBMD advantage was improved speed of data collection over the target. At first glance, one advantage of a conventional cart data collection system over the MBMD concept is the fact that metal signature data can be collected at different aspect angles over the target. Algorithms have been developed that try to exploit this spatial data for target depth estimation and target classification. Although not as spatially efficient as a single cart moving slowing over a target, the MBMD also collects data at different aspect angles over a target. If we look at Figure 2, the array of MD on the belt measure target signatures at fixed positions over the target in a ground-based reference frame. Depending on the target size,

depth and receiver belt size, potentially three spatial target signals are measured by the MBMD system.

With respect to a time-domain MD technology, there is a fundamental MBMD concept issue that should be explored further: What is the optimal way to mount the metal detectors on the moving belt array? Should the MD array be composed of a single transmitter and individual MD receiver antennas, as in this study, or should the MD array be composed of self-contained metal detectors with both the transmitter and receiver antennas mounted on the belt array?

As mentioned in the design section, primarily because of power issues, we selected to place a single, large transmitter antenna on the stationary portion of the MBMD system. The single transmitter was able to illuminate the search area beneath the sensor system with a relatively uniform magnetic field. As the individual MD receiver antennas traversed the target area, time decay signals from the target could be accurately measured. In a fully developed MBMD design, any actual transmitter magnetic field non-uniformities would be factored into a signal transfer function applied to each transmitter pulse data collection to improve the accuracy of the received signals.

If power was needed for individual MD on the belt array, there is no technological hindrance to accomplish this task. For example, rotary power transfer devices (e.g., slip rings) are readily available to route power from the stationary frame (cart) to the wheels of the MBMD. The individual MD are in contact with two wheels of the MBMD during each data collection cycle. During this time, power could be transferred to a rechargeable battery on each MD via inductive coupling technology or direct electrode contact. Inductive coupling technology may provide a more robust power coupling method due to the susceptibility of the direct contact electrode method to dirt fouling. The battery on the individual MD would then power the transmitter for one data collection cycle. Transferring power to the individual MD on a belt array will be more costly than the single transmitter approach due to the increased number of system components. System reliability will also be a factor due to the added number of components and the potential for battery failure.

The timing of the individual MD transmitters would be synchronized in such a way that the pulses of one transmitter did not interfere with the data collection of the receivers. One way to accomplish this would be to have all transmitters pulse at the same time.

The single transmitter design also had the advantage that the system timing was simple to implement. All that was needed was a simple control signal from the stationary control computer to the individual MDRM to start collecting data. Each MDDC on the ground was synchronized to collect and average data after each transmitter pulse and transfer the data to the stationary data collection computer at the end of the ground run. This approach maximized the MDDC efficiency while it minimized the data transfer rates of the RF telemetry link.

A potential disadvantage of the single transmitter multiple receivers (STMR) approach is the issue of excessive cart motion. If we consider that the cart is traversing very rough terrain, maybe at high speed, the MD receiver antennas will be truly stationary on the ground, but the transmitter antenna will be moving up and down with the cart motion. While this potential problem may not be serious for initial metal target localization in a fast area sweep, it may be a

problem if the target signatures (both time decay and spatial signatures) are used for target classification and depth determination. Even for a large transmitter antenna, the excitation magnetic field strength falls off rapidly with depth. If the transmitter antenna is moving (bouncing) up and down by tens of centimeters, the magnetic field strength will vary dramatically. This potential issue should be explored further with modeling using realistic cart motion data.

The STMR MD design approach works well for a time-domain MD technology. However, at this time, we believe the STMR MD approach will not work for frequency-domain (FD) MD technology. Typically, FD MD technology requires the transmitter and receiver coils be in a well-defined physical relationship to each other so that the primary magnetic field can be nulled in the receiver coil. If the transmitter coil were mounted on the cart and the receiver coils were mounted on the belt array, a FD MD probably would not work.

If the MBMD used FD MD technology, the preferred design approach would be to mount individual FD MD sensors on the belt links. As discussed above, power is not an issue. FD MD technology is well developed and multiple-frequency systems are available to collect metal signatures for potential target classification. However, data collection timing would have to be studied more closely since FD MD operating near each other may cause interference that is not present in TD MD technology.

The MBMD prototype used small MD antenna elements for convenience of development. A future follow-on MBMD may want to implement a MD array using antenna sizes that are more typical of conventional, fielded UXO detection technologies. As an example, a MBMD could be constructed with antenna elements the size of the EM61/EM63 systems made by Geonics Limited of Canada.

The MBMD concept is potentially useful for different metal detection technologies while still achieving speed improvements. One example would be to implement an array of total field or vector magnetometers into the belt array. Because the belt array allows extra time over a target, the MD and magnetometer could use a time-multiplex data collection scheme thus gathering simultaneous data over a target.

6 RECOMMENDATIONS

This initial feasibility study revealed several important issues that require attention in any potential follow-on MBMD development efforts. This initial study underlined the importance of:

- Robust mechanical system
- Low-power electronics
- RF telemetry link
- Firmware design
- Ground sensing

6.1 MECHANICAL SYSTEM

The mechanical system development is probably the most important for a successful MBMD system. It is also potentially the most expensive component. Care must be taken in designing a robust mechanical MD array. We selected to demonstrate the MBMD concept with a conventional tank-track belt system for development time reasons. Tank-track systems are a well developed technology both commercially and militarily. We would suggest that a simple and reliable track design be selected from existing track systems. With proper design and material selection, a successful track design with embedded MD can be accomplished. The best solution may be to out-source the track design to a commercial company that specializes in track systems.

As an alternative to the link track approach a new belt MD array technology could be implemented. The belt MD array approach would embed the MD electronics and antenna coils into a robust flexible material. The main advantage of this approach would be the simplicity of implementation: place the belt array between two wheels and a belt tensioning system and the mechanical system design is finished. The major disadvantage of such a MD belt array system is initial development cost and time. Additionally, because of the flexible nature of the belt, the approach would probably only work for time-domain MD technology.

6.2 ELECTRONICS

Low-power electronics are now commonplace in the electronics industry, and the electronic design implemented in this initial prototype system is very power conservative. However, we expect that improved power efficiency can be obtained by using advanced electronic design techniques such as Application Specific Integrated Circuits (ASIC) technology. This technology can integrate both the analog “front-end” and micro-controller circuitry into a single integrated circuit. In addition to power saving, the ASIC technology will reduce the circuitry footprint on the PCB and be cost effective for mass produced MD sensors. The downside to ASIC technology is the initial development cost, which may be on the order of $100K - $200K.

The current micro-controller speed is 5Mhz (20Mhz clock speed / 4 cycles-per-instruction). Although adequate for our prototyping purposes, any future design may want to consider a faster processor so that system design parameters are not limited by processor speed.

6.3 RF TELEMETRY

The design of the RF telemetry link turned out to be more complex than originally envisioned due to the many design choices in the electronics market. The trade-offs in RF link design are complex, but for our purposes come down to three choices: development time, link transfer speed and power consumption.

The RF link selected for the initial prototype development was a good first choice. The Chipcon CC1000 ultra-low-power, short-range CMOS single-chip UHF RF transceivers have good data transfer rates and are low-powered. However, the development time to get the RF link up and running reliably took longer than anticipated. Additionally, the RF circuitry layout was more complex and link transmission issues were a problem.

We would recommend that a review of current RF link technologies be conducted at the time of any follow-on MBMD development. The Blue-tooth and the "Mesh Zigbee Network" are two new technologies that may be useful for the RF link in a future MBMD system.

6.4 FIRMWARE

We would suggest that all system parameters be user programmable and tied automatically to the speed of belt rotation. The microcontroller on the MD array would download the system parameters at system start-up or could have the parameters dynamically adjusted during system operation. These parameters would optimize the MD data collection timing for optimal SNR based on system speed.

6.5 GROUND SENSING

An optical tilt switch was used for ground sensing in the prototype MBMD. Although the tilt switch worked well for concept validation, it was limited in telling the system where the individual MD were in the data collection cycle. If we were to implement a transmitter correction transfer function to the MD data, as described above, we would need to know where the MD were relative to the transmitter at all times during the data collection operation. The tilt switch only tells the system that it is time to start and stop collecting data. In addition, the tilt switch has a 30 degree 'dead zone' at the beginning and end of the data collection cycle.

One suggestion would be to add a photo-optical or inductive sensing array to a fixed support member on the stationary cart. For example, this sensing array could be added to the lower track support as indicated in Figure 3. The sensing array would tell the data collection computer where each individual MD is in the system.

ACKNOWLEDGEMENTS

The authors would like to thank Matthew P. Para for designing the mechanical hardware and Michael J. Morrison for constructing the hardware.

PUBLICATIONS

Carl V. Nelson, Deborah P. Mendat, Toan B. Huynh, "Moving belt metal detector (MBMD)" accepted SPIE Defense & Security Symposium, Detection and Remediation Technologies for Mines and Minelike Targets, Orlando, FL, April 2006.

REFERENCES

1. C. V. Nelson, "Moving Belt Sensor," US Patent Application 20050270154, December 8, 2005.

2. A number of publications are available on hand cart EM systems at the Geonics website http://www.geonics.com/html/uxo.html

3. H. H. Nelson, B. J. Barrows, T. H. Bell, B. San Filipo, and I. J. Won, "Characterization of a GEM-3 array for UXO classification," Proceedings of SPIE Vol. 5089, Detection and Remediation Technologies for Mines and Minelike Targets VIII; R.S. Harmon, J. H. Holloway, Jr., J. T. Broach; Eds., September 2003.

4. J. R. McDonald and H. H. Nelson, "Man-Portable Adjuncts for the MTADS," NRL/PU/6110-01-434, February 2001.

5. C. V. Nelson, C. B. Cooperman, W. Schneider, D. S. Wenstrand, and Dexter G. Smith, "Wide Bandwidth Time-domain Electromagnetic Sensor for Metal Target Classification," IEEE, Trans. Geoscience and Remote Sensing, Vol. 39, No. 6, pp 1129-1138, April 2001.

ABBREVIATIONS AND ACRONYMS

ADC	Analog-to-Digital Converter
APL	The Johns Hopkins University Applied Physics Laboratory
ASIC	Application Specific Integrated Circuits
BRAC	Base Realignment and Closure
CMOS	Complementary Metal-Oxide Semiconductor
DC/DC	Direct Current/Direct Current
EMI	Electromagnetic Induction
FD	Frequency-domain
MBMD	Moving Belt Metal Detector
MD	Metal Detector
MDDC	Metal Detection and Data Collection
MDRM	Metal Detector Receiver Module
PCB	Printed Circuit Board
PVC	Poly-vinyl Chloride
RF	Radio Frequency
SNR	Signal-to-Noise Ratio
STMR	Single Transmitter Multiple Receivers
UHF	Ultra High Frequency
UXO	Unexploded Ordnance