FINAL REPORT

Demonstration of a Solar Thermal Combined Heating, Cooling and Hot Water System Utilizing an Adsorption Chiller for DoD Installations

ESTCP Project EW-200928

DECEMBER 2013

Tim Hansen
Eric Ringler
William Chatterton
Southern Research Institute

Distribution Statement A

This document has been cleared for public release

REPORT DOCUMENTATION PAGE

Form Approved
OMB No. 0704-0188

Public reporting burden for this collection of information is estimated to average 1 hour per response, including the time for reviewing instructions, searching existing data sources, gathering and maintaining the data needed, and completing and reviewing this collection of information. Send comments regarding this burden estimate or any other aspect of this collection of information, including suggestions for reducing this burden to Department of Defense, Washington Headquarters Services, Directorate for Information Operations and Reports (0704-0188), 1215 Jefferson Davis Highway, Suite 1204, Arlington, VA 22202-4302. Respondents should be aware that notwithstanding any other provision of law, no person shall be subject to any penalty for failing to comply with a collection of information if it does not display a currently valid OMB control number. **PLEASE DO NOT RETURN YOUR FORM TO THE ABOVE ADDRESS.**

1. REPORT DATE *(DD-MM-YYYY)*
31-12-2013

2. REPORT TYPE
Final

3. DATES COVERED *(From - To)*
Oct 2009 – Dec 2013

4. TITLE AND SUBTITLE

Demonstration of a Solar Thermal Combined Heating, Cooling and Hot Water System Utilizing an Adsorption Chiller for DoD

5a. CONTRACT NUMBER
W912HQ-09-C-0034

5b. GRANT NUMBER

5c. PROGRAM ELEMENT NUMBER

5d. PROJECT NUMBER

5e. TASK NUMBER

5f. WORK UNIT NUMBER

6. AUTHOR(S)

Hansen, Timothy; Ringler, Eric; Chatterton, William

7. PERFORMING ORGANIZATION NAME(S) AND ADDRESS(ES)

Southern Research Institute
2000 Ninth Ave S
Birmingham, AL 35205-2708

8. PERFORMING ORGANIZATION REPORT NUMBER
12950

9. SPONSORING / MONITORING AGENCY NAME(S) AND ADDRESS(ES)

SERDP Program Office
901 North Stuart Street, Ste
Arlington, VA 22203

10. SPONSOR/MONITOR'S ACRONYM(S)
SERDP/ESTCP

11. SPONSOR/MONITOR'S REPORT NUMBER(S)
EW-200928

12. DISTRIBUTION / AVAILABILITY STATEMENT

Approved for public release; distribution is unlimited

13. SUPPLEMENTARY NOTES

14. ABSTRACT

Technologies used to provide cooling for buildings at DoD sites represent a substantial portion of the energy consumption at fixed installations and forward operating bases. With increasing energy costs, the economic and security impacts of cooling loads are an important consideration when planning for retrofit improvements and new installations. The objective of this demonstration was to demonstrate the technical and economic efficacy of a solar-thermal cooling system using an adsorption chiller at the Parris Island Marine Corps Recruit Depot. Performance objectives included demonstrating peak cooling capacity, maximum capacity using solar energy alone, steam and electrical energy reductions and associated emissions footprint reductions, operability and reliability, and economic benefits. The primary components of the demonstrated technology are an adsorption chiller, an array of evacuated tube solar panels, and balance of plant equipment necessary to support operation of the system as integrated with existing HVAC equipment at the site. The system design also included the ability to utilize excess solar thermal energy for domestic water heating.

15. SUBJECT TERMS
Solar thermal cooling, Adsorption chiller, energy reductions, emission reductions

16. SECURITY CLASSIFICATION OF:			17. LIMITATION OF ABSTRACT	18. NUMBER OF PAGES	19a. NAME OF RESPONSIBLE PERSON
a. REPORT	b. ABSTRACT	c. THIS PAGE		83	Tim Hansen, SRI
U	U	U			19b. TELEPHONE NUMBER *(include area code)* 919-282-1050

Standard Form 298 (Rev. 8-98)
Prescribed by ANSI Std. Z39.18

REVIEW NOTICE

This report has been peer and administratively reviewed by Southern Research Institute, Vanir Energy. PowerPartners, Parris Island MCRD, and the U.S. Department of Defense ESTCP program, and approved for publication. Mention of trade names or commercial products does not constitute endorsement or recommendation for use.

Acknowledgments:

This project is funded under the U.S. Department of Defense Environmental Security Technology Certification Program (ESTCP), Sustainable Infrastructure Program. This report has been developed by Southern Research Institute in accordance with the requirements of this program.

We would like to acknowledge the following organizations, programs, and individuals for the valuable contribution to this document.

Parris Island Marine Corps Recruit Depot:

- Lt Col Miller, Facilities Maintenance Officer
- Richard Pierce, Energy Manager (Project champion and POC)
- Dr. Herman Brown, Resource Efficiency Manager, (contractor)
- LCDR Rob Zhang, Public Works Officer
- Roy McAlhany, Planner and Estimator (HVAC/Electrical Engineering Technician)
- Ronnie Myers, Deputy Facilities Maintenance Officer (Second POC)

Vanir Energy

- Steve Hunter
- Steve Toy
- Don Haase

Power Partners

- Tom Lopp
- Wes Livingston
- Phillip Sullivan

Table of Contents

EXECUTIVE SUMMARY **1**

1.0 INTRODUCTION **4**
1.1 Background 4
1.2 Objective of the Demonstration 4
1.3 Regulatory Drivers 5

2.0 TECHNOLOGY DESCRIPTION **6**
2.1 Technology Overview 6
2.1.1 Adsorption Chiller 6
2.1.2 Evacuated Tube Solar Panels 7
2.1.3 Applications within DoD 7
2.2 Technology Development 8
2.3 Advantages and Limitations of the Technology 8
2.3.1 Adsorption Chiller Advantages and Limitations 8
2.3.2 Solar Collector Array Advantages and Limitations 9

3.0 FACILITY/SITE DESCRIPTION **10**
3.1 Facility Operations 10
3.2 Facility Conditions Prior to Demonstration 10
3.3 Implementation Criteria 12

4.0 PROJECT NARRATIVE **13**
4.1 Site Selection 13
4.2 Baseline Testing 13
4.3 Factory Acceptance Test 14
4.4 Construction 14
4.5 Initial Commissioning, Re-design, and Re-commissioning 14
4.6 Operations 16
4.7 Domestic Hot Water System Implementation 18
4.8 System Handover to Parris Island 19
4.9 Operations Summary 19

5.0 TEST DESIGN **21**
5.1 Conceptual Test Design 21
5.2 Design and Layout of Technology Components 21
5.3 Baseline Characterization 22
5.4 Factory Acceptance Test 23
5.5 Operational Testing 23
5.6 Sampling Protocol 23
5.7 Sampling Results 24

6.0 PERFORMANCE ASSESSMENT **25**
6.1 Summary of Performance Objectives and Results 25
6.2 Performance Results for Demonstration Plan Objectives 25
6.2.1 Peak Cooling Capacity 26
6.2.2 Maximum Cooling Capacity Driven by Solar Energy Alone 26
6.2.3 Steam Energy Reduction 26
6.2.4 GHG Emission Footprint Reduction 29
6.2.5 Availability and Reliability 31
6.2.6 Economic Performance 31
6.2.7 Operability/Ease of Use 31

6.3 Performance Results for Major System Sub-Components 32
6.3.1 Adsorption Chiller 32
6.3.2 Solar Array 36
6.4 Data Quality 37
6.4.1 Heat Flow Determinations 37
6.4.2 Flow Meter Failures 38
6.4.3 Heat Input to Chiller 38

7.0 COST ASSESSMENT 40
7.1 Cost Model 40
7.1.1 Capital Costs 40
7.1.2 Operation and Maintenance Costs 41
7.1.3 Service Life 42
7.2 Cost Drivers 42
7.3 Cost Analysis 42
7.3.1 Parris Island Installation 42
7.3.2 Differential Cost Analysis 44
7.3.3 Alternative Performance Scenarios 45
7.4 Cost Comparisons 46

8.0 IMPLEMENTATION ISSUES 48

9.0 TECHNOLOGY TRANSFER 50

10.0 REFERENCES 51

APPENDICES 52
Appendix A: Points of Contact 52
Appendix B: Project Timeline 53
Appendix C: Control Sequence 55
Appendix D: Baseline Results Summary 56
Appendix E: Test System Parasitic Loads 58
Appendix F: Major Component Specifications 59
Appendix G: Factory Acceptance Test Results 64
Appendix H: Chiller Performance Summary Data 67
Appendix I: System Performance Charts 68
Appendix J: System Schematics 75

Figures

Figure 1. Adsorption chiller schematic 6
Figure 2. Evacuated Tube Solar Collectors 7
Figure 3. Location of Building 590 and central steam plant 10
Figure 4. Diurnal DHW Usage 57
Figure 5. System Performance Charts 10/21-26, 2011 68
Figure 6.System Performance Charts 3/29 -4/6. 2012 69
Figure 7. System Performance Charts 4/9-12, 2012 70
Figure 8. System Performance Charts 5/13-16, 2012 71
Figure 9. System Performance Charts 5/17-22, 2012 72
Figure 10. System Performance Charts 6/15-18, 2013 73
Figure 11. System Performance Charts 6/22-26, 2013 74
Figure 12. Baseline System Configuration 75
Figure 13. Test System Configuration 76

Tables

Table 1. Operational Summary 19
Table 2. Performance Objectives and Demonstration Results 25
Table 3. Steam Energy Reduction over Baseline 27
Table 4. GHG Emissions Reductions 29
Table 5. Absorption Chiller Performance Summary 33
Table 6. Solar Array Thermal Output 36
Table 7. Capital Costs 40
Table 8. Incremental Operation and Maintenance Costs 41
Table 9. Cost Analysis 43
Table 10. Differential Cost Analysis 45
Table 11. Economic Projections for Alternate Performance Scenarios 46
Table 12. Technology Transfer 50
Table 13. Points of Contact 52
Table 14. Project Timeline 53
Table 15. Summary of Baseline Monitoring Results 56
Table 16. Test System Parasitic Loads 58
Table 17. Factory Acceptance Test Results 64
Table 18. Chiller Performance Summary 67

Acronyms

Acronym	*Definition*
AHRI	Air-Conditioning, Heating and Refrigeration Institute
APLV	Applied Part Load Value is similar to NPLV, except the weighting of COP at 25%, 50%, 75% and 100% have been adjusted to match the actual percent of time the system will operate at these loadings.
ASHRAE	American Society of Heating Refrigeration and Air-conditioning Engineers
BLCC	NIST Building Lifecycle Cost program
BMS	Building Management System
BTU	British thermal units (energy, usually thermal or chemical)
BTU/h	British thermal units per hour (rate of energy transfer or use)
CFC	Chlorofluorocarbons
CH_4	Methane
CO	Carbon monoxide
CO_2	Carbon dioxide
COP	Coefficient of Performance, a unit-less efficiency measure (relates to refrigeration cycle). The ratio of chilling energy transfer over driving energy input.
C_p	Heat capacity, normally expressed in BTU/lb/F
DHW	Domestic Hot Water
DoD	United States Department of Defense
DQO	Data Quality Objective
ECAM	Environmental Cost Analysis Methodology
EIA	Energy Information Administration
ESTCP	Environmental Security Technology Certification Program, Department of Defense
F	Fahrenheit Degrees
FAT	Factory Acceptance Test
FMD	Facilities Maintenance Division
gpm	US gallon per minute
HVAC	Heating, Ventilation and Air Conditioning
kW_e	kilo Watt (electric) (rate of energy use or transfer), 0.001 Mwe
kWe h	kilo Watt hour (electric) (energy), 0.001 MWe h
kW_S	Solar radiant power. Usually presented normalized per unit area.
lb	Pound
LtCol	Lieutenant Colonel
MCRD	Marine Corps Recruit Depot
MM	Million (prefix)
MMBTU	Million British Thermal Units
MW_e	mega Watt (electric) (rate of energy use or transfer), 1000 kWe
MW_e h	mega Watt hour (electric) (energy), 1000 kWe h

Acronym	***Definition***
N/A	Not applicable or not available
NIST	National Institute of Standards and Technology
NPLV	Non-standard Part Load Value – industry standard means of calculating annual COP; similar to IPLV using measurements that can be performed in the field.
NPV	Net present value
O&M	Operation and maintenance
OMB	Office of Management and Budget
P&ID	Piping and Instrumentation Diagram
PI	Parris Island
PIFMD	Parris Island Facilities Management Division
PLC	Programmable Logic Controller
POC	Point of Contact
PRV	Pressure Relief Valve
Q*	Rate of heat transfer or consumption
QA	Quality Assurance
QC	Quality Control
RT	Tons refrigeration (cooling energy units)
scf	Standard cubic feet
sf	Square foot (square feet)
SUT	System Under Test
P	Fluid density

EXECUTIVE SUMMARY

OBJECTIVES OF THE DEMONSTRATION

Technologies used to provide cooling for buildings at DoD sites represent a substantial portion of the energy consumption at fixed installations and forward operating bases. Conventional vapor compression and absorption cooling systems involve refrigerants and chemicals that require special handling to prevent toxic exposure or harmful discharge into the environment. With increasing energy costs, the economic and security impacts of cooling loads are an important consideration when planning for retrofit improvements and new installations.

The objective of this demonstration was to demonstrate the technical and economic efficacy of a solar-thermal cooling system using an adsorption chiller at the Parris Island Marine Corps Recruit Depot (MCRD) in South Carolina. Quantitative and qualitative performance objectives included demonstrating:

- Peak cooling capacity
- Maximum capacity using solar energy alone
- Steam and electrical energy reductions and associated emissions footprint reductions
- Operability and reliability
- Economic benefits

TECHNOLOGY DESCRIPTION

The primary components of the demonstrated technology are an adsorption chiller, an array of evacuated tube solar panels, and balance of plant equipment (e.g., pumps and piping) necessary to support operation of the system as integrated with existing HVAC equipment at the site (e.g., air handlers and controls). The system design also included the ability to utilize excess solar thermal energy (e.g., in winter months) for domestic water heating.

Adsorption chillers are better suited than absorption chillers for solar thermal applications due to their ability to operate over a wider range of hot water supply temperatures (as low as 120 °F). Adsorption chillers, like all chillers, extract heat from the environment by way of vaporization of a refrigerant liquid. In an adsorption chiller, the refrigerant (water) is evaporated under vacuum conditions. It is then adsorbed (condensed) onto a solid sorbent; in this case, silica gel. The silica gel is regenerated (desorbed) using hot water supplied by solar energy and/or steam.

Evacuated tube solar panels were employed due to their higher efficiency and higher output temperatures compared to flat panel collectors.

The demonstration was conducted at the 1st Battalion Mess Hall (Building 590) located at Parris Island MCRD. The baseline cooling system was an absorption chiller (90 RT) powered by steam for cooling the dining area. An electric chiller (60 RT) was used to cool the kitchen area.

The conceptual test design was to evaluate the performance of the existing system before modification as a baseline and compare this to the performance of the modified system to determine energy savings. In addition, the performance of major sub-components of the system was to be evaluated. Major sub-components included the adsorption chiller, the solar array loop, and the domestic hot water (DHW) system.

DEMONSTRATION RESULTS

Table ES-1 summarizes the demonstration plan performance objectives, success criteria and demonstration results. None of the demonstration objectives were fully satisfied. Although operation of the adsorption chiller was not demonstrated at full rated capacity, analysis shows that this limitation resulted from balance of plant design and implementation issues, not inherent problems with the

adsorption chiller. The solar array performed exactly as expected. Due to construction delays, system design, and site integration issues, the DHW system was not operational prior to the end of the demonstration. Additional details that impacted demonstration results are discussed in the following section on implementation issues.

Table ES-1 Performance Objectives and Outcomes

Performance Objective	Success Criteria	Results
Quantitative Performance Objectives		
Determine peak cooling capacity of the SUT	Peak cooling capacity of SUT must be greater than 80 RT	Objective not met. Maximum sustained cooling was 52.8 RT.
Determine max cooling capacity of the SUT when driven by solar energy only	When DHW solar energy demand is zero, peak cooling capacity of SUT must be greater than 60 RT without supplemental steam	Objective could not be evaluated. The final system design did not permit the system to be operated on solar output alone.
Steam energy reduction	Steam energy reduction will exceed 800 MMBtu/yr including Cooling and DHW	Objective not met. Annualized net steam energy reduction over baseline was 703.8 MMBtu/yr.
Emission foot print reduction	Reductions exceed: 79 metric tons CO2e per year relative to baseline.	Objective not met. Net GHG emissions reduction was 32.1 metric tons CO2e per year.
Equipment Availability and Reliability	>99% availability. >99% reliability.	Objective not met. Overall system availability and reliability could not be quantitatively assessed due to ongoing operational issues throughout the demonstration.
Assess Economic Performance	Simple payback < 7 years; Positive NPV based on ECAM and BLCC	Objective not met. Site-specific payback will not be achieved within the system lifetime.
Qualitative Performance Objectives		
Determine Ease of use	The average points above neutral (or above three points)	Objective could not be fully evaluated as the system did not achieve stable, routine operations during the demonstration period. The system is complex and unfamiliar. Training and documentation were incomplete as of the end of the demonstration. Implementation issues complicated operations.

IMPLEMENTATION ISSUES

Unexpected technical and management issues were encountered during the course of the project that negatively impacted the outcome of the demonstration. Significant issues included:

- The available roof area was insufficient to support the planned solar thermal capacity.
- The initial design for chiller operation on solar or steam energy alone was unworkable due to insufficient solar capacity to operate the chiller on solar energy alone as well as piping design issues that prevented operation on steam without utilizing the solar buffer tank.
- The piping design failed to account for normal water transfer between the hot water and tower loops within the chiller.
- The solar field piping construction, though built to manufacturer specifications, was inadequate to withstand high temperatures during stagnation events.

- The initial piping design had inadequate provision for pressure relief and release of entrapped air.
- The initial control sequence was incomplete, which caused delays in system commissioning.
- The design failed to make adequate provisions to ensure that chiller supply flows and temperatures would meet the chiller submittal specifications.

In Southern's opinion, the original design was incomplete and inadequate. Southern's technology partner, Vanir Energy, was not fully responsive to the requirements of a demonstration project, resulting in delays in addressing design and operability issues as they arose with the result that Southern was unable to optimize or fully evaluate all aspects of system performance before the end of the demonstration period.

The adsorption chiller factory acceptance test conditions matrix did not anticipate the range of possible supply flow and temperatures to the chiller that might be encountered in the field, or span the range of chiller cycle timing that might be employed to optimize performance under field conditions. This inadequate testing made it impossible to quantitatively determine whether the chiller performance in the field was within the expected range, and complicated efforts to optimize chiller performance in the field.

There were also issues with building HVAC systems maintenance that negatively impacted Southern's ability to fully evaluate the performance of the test system. In particular, during much of the 2012 cooling season, maintenance issues with the electric chiller (installed in series with the adsorption chiller) affected adsorption chiller performance such that results were not representative of normal chiller performance

Based on Southern's experience with this demonstration and findings from other researchers [8,9], the capital cost of a solar thermal chiller system using evacuated tube collectors is unlikely to be recovered from energy savings alone. A thorough design effort accounting for net parasitic loads, piping friction head, and building HVAC system operating details would be required to achieve payback within the system lifetime (20-30 years).

1.0 INTRODUCTION

This project demonstrated the technical and economic efficacy of a solar-thermal cooling and heating system using an adsorption chiller deployed at Parris Island Marine Corps Recruit Depot (PIMCRD). Solar energy was collected using an array of 85 evacuated tube solar panels each with a total effective aperture area of 4,131 square feet. The resulting hot water was used to drive an adsorption chiller rated to provide 80 RT of comfort cooling to the host facility. Energy not required for cooling may be used to heat domestic hot water (DHW).

1.1 Background

Present technologies used to provide heating and cooling for buildings at DoD sites represent a substantial portion of the energy consumption at fixed installations and forward operating bases. A combination of electric power and steam energy is used, often from coal or hydrocarbon combustion. Conventional mechanical and absorption cooling systems involve refrigerants and chemicals that require special handling to prevent discharge into the environment. With increasing energy costs, the economic and security impacts of heating and cooling loads are an increasingly important consideration when planning for retrofits and future installations.

The adsorption chiller demonstrated for this project replaced an aging absorption chiller operated on steam. The adsorption chiller uses municipal quality water as the refrigerant. The water is cyclically adsorbed and desorbed from a silica gel desiccant. Both the desiccant and the refrigerant are environmentally benign. The adsorption chiller is capable of utilizing low grade (> 120 °F) solar thermal or waste heat sources, is capable of operating over a wide range of thermal input and heat removal conditions, and has very low maintenance and power requirements.

Thermally driven absorption chillers are well proven; however, they depend on the use of toxic or corrosive refrigerant solutions (typically lithium bromide), require more tightly controlled thermal input and heat removal conditions, and have significant maintenance and power requirements. Compared to mechanical chillers, adsorption chillers have lower maintenance, lower operating costs, lower noise, and do not require hydrofluorocarbon (HFC) refrigerants. HFC refrigerants are relatively costly and require special handling to avoid atmospheric release due to their high global warming potential.

Benefits of the solar thermal cooling and DHW heating system include:

- Reducing energy consumption and exposure to energy price volatility,
- Reducing electricity and boiler associated emissions of criteria pollutants and greenhouse gases,
- Reducing life-cycle environmental impacts of cooling equipment by using water as the refrigerant,
- Reducing dependence on petroleum-based fuels providing enhanced security.

1.2 Objective of the Demonstration

The objective of this project was to demonstrate the technical and economic efficacy of a solar-thermal heating and cooling system using an adsorption chiller at the Parris Island MCRD in South Carolina. Quantitative and qualitative performance objectives are presented in section 6.1 and include demonstrating:

- Peak cooling capacity
- Maximum capacity using solar energy alone
- Steam and electrical energy reductions and associated emissions footprint reductions
- Operability and reliability
- Economic benefits

1.3 Regulatory Drivers

Energy security, environmental sustainability, improved reliability and long-term savings are all drivers for the subject technology. On October 5, 2009 President Obama issued Executive Order 13514 titled "Federal Leadership in Environmental, Energy and Economic Performance". This Order challenges all federal agencies to establish greenhouse gas emissions reduction targets, specifically "reducing energy intensity in agency buildings;" and "increasing agency use of renewable energy…" The order goes on to require plans that will, among other things "decreasing agency use of chemicals where such decrease will assist the agency in achieving greenhouse gas emission reduction targets…" as well as beginning in 2020 requiring all new buildings commencing planning will be "designed to achieve zero net energy by 2030" and "pursuing cost-effective, innovative strategies to minimize consumption of energy, water and materials".

Executive Order 13423, titled "Strengthening Federal Environmental, Energy, and Transportation Management", includes the following goals: Energy efficiency improvements and greenhouse gas emissions reductions by way of reduction in energy intensity by (i) 3 percent annually through FY 2015 or (ii) 30 percent by FY 2015, relative to FY03 baseline; and 50% of statutorily required renewable energy consumed has to come from new renewable sources.

Finally, the Defense Authorization Act FY 2007, SEC. 2852 focuses on renewable energy application for electricity needs, referencing the Energy Policy Act of 2005. Although not directly applicable, in some applications, the proposed technology may offset grid electricity usage via implementation of a renewable energy technology and energy efficiency measures.

2.0 TECHNOLOGY DESCRIPTION

2.1 Technology Overview

The primary components of the demonstrated technology are (1) an adsorption chiller and (2) an array of evacuated tube solar panels. Each of these components is described below, followed by a short discussion of possible DoD applications.

2.1.1 Adsorption Chiller

Vanir Energy (formerly Appalachian Energy) selected the Eco-Max adsorption chiller manufactured by Power Partners, Inc. of Athens GA for the demonstration. Vanir Energy purchased Appalachian Energy shortly after the demonstration began, but before construction commenced.

The Eco-Max chiller is based on technology created by Nishiyodo of Japan, with consultation from their engineering team and suppliers. Nishiyodo was the developer of the first commercial application of the technology. Chillers were a small but growing division of the company when Nishiyodo was forced to close its primary manufacturing business.

PowerPartners continues to manufacture the Eco-Max chiller in capacities ranging from 3-330 tons using silica gel or 250-450 tons using zeolite desiccant. Adsorption chillers are also currently manufactured by:

- Mayekawa (20-100 tons using zeolite desiccant)
- Union (10-125 tons using silica gel)
  Sortech - 2 ton units for residential use
- InvenSor - 3 ton units for residential use

Several other companies (GBU, AAA Machine, Mitsubishi AQSOA, Weatherite) claim to produce adsorption chiller units, but in fact rebrand units from one of the companies listed above.

Adsorption chillers, like all chillers, extract heat from the environment by way of vaporization of a refrigerant liquid. In a closed system, the liquid must then be re-condensed in some manner. In an adsorption chiller, the refrigerant (water) is evaporated under vacuum conditions. It is then adsorbed (condensed) onto a solid surface: silica gel.

The Eco-Max adsorption chiller has 4 chambers; an evaporator, a condenser and two adsorption chambers. All four chambers are operated at nearly full vacuum. The adsorption chiller cycles Chambers 1 and 2 between adsorbing and desorbing service. Water vapor is evaporated from the surface of the water in the evaporator, creating the chilling effect that produces the cold water output.

The water vapor enters Chamber 1 and is adsorbed into the silica gel in the chamber. Cool water is circulated in this chamber to remove the heat deposited in the silica gel by the adsorption process.

Chamber 2 is regenerated during this portion of the cycle. In the regeneration stage, the water vapor is driven from the silica gel by hot water supplied to the machine. This water vapor rises to the condenser chamber, where it is condensed by the cooling water.

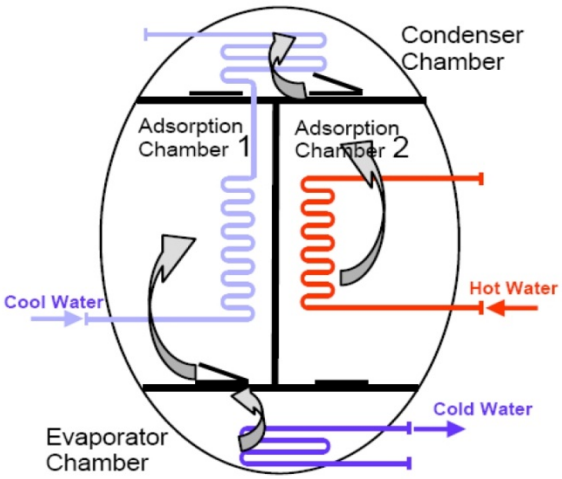

Figure 1. Adsorption chiller schematic

The condensed water flows to the bottom of the machine where it is available for reuse.

During this initial cycle, the pressure in Chamber 1 is slightly lower than in the evaporator. A portion of the refrigerant evaporates and expands into Chamber 1. At the same time, the pressure in Chamber 2 is slightly elevated as the water vapor is driven from the silica gel. That water vapor is pushed into the condenser which is at a lower pressure.

When the silica gel in Chamber 1 is saturated with water and the silica gel in Chamber 2 is dry, the machine reverses the functions of the two chambers. The first step is to open the valves between the two chambers and allow the pressures to equalize. Then cool water is sent through Chamber 2 to transfer residual heat to Chamber 1 and begin the heating process. Reversal is then completed and the adsorption in Chamber 2 commences and Chamber 1 is dried by the desorption heating.

2.1.2 Evacuated Tube Solar Panels

Vanir Energy (Southern's partner on this demonstration) selected Paradigma evacuated tube solar collectors manufactured by Ritter. The evacuated tube collectors have lower thermal losses than conventional glazed panels. The circular absorbing surfaces combined with an integrated reflector optimize energy yield at varying solar angles throughout the day and effectively capture diffuse as well as direct solar radiation. The tubes are resistant to hail impact and are easily replaced individually if damage occurs. Figure 2 shows the structure of the evacuated tubes.

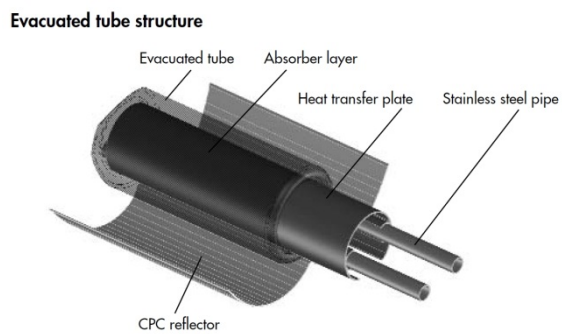

Figure 2. Evacuated Tube Solar Collectors

The solar panel array installed at Building 590 was designed by the manufacturer (Ritter) to operate in a closed loop. When there is no solar thermal demand, the water in the panels will flash to steam. Such an occurrence is called 'stagnation' of the array. During stagnation, high pressures and temperatures in excess of 350 °F may be generated. Expansion tanks are provided to take up the increased volume. Following stagnation, no further heat may be recovered from the solar array until the panels cool down (generally overnight).

2.1.3 Applications within DoD

According to a database of DoD real estate, DoD operates approximately 189,000 buildings in southern states with ~1,283 million square foot area. Approximately 1% of the square footage was in buildings of 60,000 sf (corresponding to 60RT chiller) or greater. This means that there are about 214 potential applications in the Southern US (some of these will be larger capacity units resulting in fewer total units, i.e., a 125 RT unit would displace ~ 2x60 RT.) Mess halls normally have much higher cooling load/square foot than the average. As a result, the potential applications may be higher. Assuming a 20% penetration into this market, there could be as many as 43 installations at DoD facilities. The most common installations involve chiller of either 15-40 RT or 100-150 RT capacity.

2.2 Technology Development

No technology development work was conducted prior to the field demonstration as part of this ESTCP project. Silica-gel adsorption chilling was first commercially applied in 1986 by Nishiyodo. PowerPartners began manufacturing adsorption chillers in the United States in 2008. In the U.S., there are about 15 adsorption chillers currently installed. Worldwide, there are about 250 commercial units installed primarily in Japan, and approximately 100 residential units, installed mostly in Germany.

2.3 Advantages and Limitations of the Technology

The following sub-sections present advantages and limitations of the major technology sub-components: the adsorption chiller and the evacuated tube solar collector panels.

2.3.1 Adsorption Chiller Advantages and Limitations

Alternatives to heat driven adsorption chillers include absorption chillers (also heat driven) and mechanical chillers (compressor driven). Adsorption chillers are capable of running on low grade or variable quality heat input such as provided by thermal solar panels. The main disadvantage of the adsorption chiller is the large minimum size (cooling capacity), prohibiting the technology from entering the house-hold or small commercial air conditioning markets. Current adsorption chillers can be sized from 10 to 1,000 tons of refrigeration.

Adsorption vs. Absorption chillers

In general, the capital cost of equipment and balance of plant is higher for adsorption than absorption chillers. The efficiency (COP) of absorption vs. adsorption chillers is similar for similarly designed chillers, but tends to be somewhat higher for absorption chillers. PowerPartners has specified an adsorption chiller COP of 0.62 for loads exceeding 60 RT. The COP for absorption chillers typically falls in the range of 0.65 to 0.7.

Compared to typical absorption chillers using lithium bromide solution as absorbent, the EcoMax adsorption chillers have the following advantages:

- The silica gel adsorbent in the EcoMax chiller is non-toxic and the initial charge should last for the lifetime of the equipment. The lithium bromide charge in an absorption chiller typically needs to be replaced every 4-5 years. Lithium bromide is corrosive, increasing component replacement frequency, increasing maintenance requirements and shortening equipment lifetime relative to absorption chillers. Lithium bromide can crystallize within the system if operating conditions are not maintained within relatively tight tolerances. Lithium bromide is a hazardous material that requires special handling during maintenance and decommissioning.
- The EcoMax adsorption chiller can operate over a wide range of hot water supply temperatures (122F to 205F+). Absorption chillers typically require hot water supply temperatures in excess of 180F and hot water supply temperatures must be maintained within a fairly narrow band to prevent crystallization.
- Power requirements for the EcoMax adsorption chiller (excluding BoP) are very low (<0.5 kW). The absorption chiller that was replaced at the demonstration site consumed 5 kW.

Adsorption vs. Mechanical Chillers

Mechanical chillers cannot make use of low grade thermal energy such as solar or waste heat; however, the efficiency for a mechanical chiller is much higher than for an adsorption or absorption chiller. For the same tonnage rating, a mechanical chiller will have a much smaller footprint and much lower weight. Noise and vibration levels are higher for mechanical chillers. The HFC or HCFC refrigerants used in mechanical chillers require special handling by certified technicians.

2.3.2 Solar Collector Array Advantages and Limitations

Solar thermal collector panels can effectively collect solar energy at minimal operating cost for the pump circulating the heat transfer fluid. The heat transfer fluid temperature can be high enough for the adsorption chiller to operate.

The main disadvantage of the solar heat collector is that it cannot provide energy if sunlight is not available. For most projects, a supplemental heat source is required. Another disadvantage of the solar system is the extent of the collector surface needed to capture the required energy. Many buildings may not have sufficient, unobstructed roof area available to mount the solar panels and many buildings may not have the correct, unobstructed orientation to the path of the sun for solar collectors to operate effectively.

3.0 FACILITY/SITE DESCRIPTION

The facility selected for the demonstration was the First Battalion Mess Hall (Building 590) at the Marine Corps Recruit Depot at Parris Island, SC. The site was selected over other suitable sites due to responsiveness and interest of the Parris Island energy manager and Facilities Maintenance Division (FMD) management and staff. A map showing the location of Building 590 is shown in Figure 3.

Figure 3. Location of Building 590 and central steam plant.

3.1 Facility Operations

The First Battalion Mess Hall serves 700 persons per seating, three seatings per meal, and three meals (breakfast, lunch, and dinner) per day, seven days per week. As a result, the live load (cooling load due to occupancy) is significant and fairly consistent each day. The amount of hot water used for preparing meals and washing dishes is also relatively consistent each day averaging about 8,100 gallons per day with a typical range from 6,000 to 10,000 gallons per day.

3.2 Facility Conditions Prior to Demonstration

Prior to the demonstration, the dining area of the 1st Battalion Mess Hall was cooled by a steam driven absorption chiller (Trane model ABSC-01B). This chiller was nominally rated at 112 refrigeration tons (RT) capacity but was de-rated to 90 tons. The chiller was 12-15 years old at the time of replacement and was reportedly nearing the end of its useful life. The existing absorption chiller served an air handler unit (AHU-1B) rated at 87.5 RT to provide cooling for the dining area which comprises about 10,500 square feet.

In the pre-demonstration configuration, the kitchen and scullery (dish washing area) areas were cooled by an air cooled electric chiller rated at 60 refrigeration tons. The kitchen area was served by an air handler (AHU-1A) rated at 43 RT. The scullery area was served by an air handler (AHU-2A) rated at 5 RT. The kitchen and scullery areas, together, comprise about 5200 square feet, excluding refrigerator and freezer

space, and a dry storage area that is independently cooled.

The steam plant is located about one mile from Building 590 and runs primarily on natural gas with fuel oil backup. The location of the steam plant is shown in Figure 3 above. Steam is supplied to Building 590 via a base-wide above ground steam distribution system. The steam supply pressure at Building 590 is regulated to 15 psi.

The cooling set-point temperature for the building is 78 ^{o}F. The traditional roof was replaced with a reflective "cool roof" in October 2009. Hot water for the kitchens and scullery is currently provided via steam converters. Comfort heat is provided by direct steam coils in the air handling units.

The existing HVAC air handlers, piping and cooling tower were deemed by Vanir to be suitable for conversion to the new solar driven adsorption technology. This pre-existing equipment was left in place and continues to serve. The building was inspected by the system contractor (Vanir) and satisfactory sun-path orientation and unobstructed area of Building 590 for solar collection was confirmed. On March 26, 2010 Vanir made detailed measurements on the roof of Building 590 to determine placement and mounting of the solar panels.

In order to conduct a fair and unbiased demonstration, baseline and extended testing were planned to be conducted with the building HVAC systems in 'as found' condition – with the implicit assumption that the HVAC system was generally functioning and in a reasonable state of repair. As such, Southern made no attempt to assess the condition of building HVAC system prior to baseline testing. However, during baseline testing, it became apparent that a number of building HVAC components were not fully functioning. Southern felt that in order to be able to properly assess the performance of the new solar chiller system, the condition of the building HVAC system should be known and in a reasonable state of repair. On February 1, 2011, Southern met on site with PIFMD's HVAC contractor to assess the condition of the existing HVAC system. A large number of problems were found and some of these were addressed over the following months as construction of the solar chiller system commenced. In short, the condition of the existing HVAC system was such that the building cooling load was much higher than it should have been. A record of findings and recommendations from this survey is on file [1].

In August, 2012 an engineer from PowerPartners conducted an additional survey of the building HVAC system, maintenance practices, and environmental controls. The conclusion of this survey was also that the building heat and humidity loads were much higher than necessary and recommendations were provided to reduce the cooling load [2].

In another instance, Southern noted that the facility BMS data showed that the fresh air damper for the main dining air handler was closed when, in fact, it was open: substantially increasing the building cooling load. Southern also noted discrepancies between BMS temperature sensor values used to control the solar chiller system and Southern's independent sensors. Southern was unable to coordinate with PIFMD to assess the impact of these discrepancies on system control. Despite significant efforts to understand and address Building 590 HVAC issues, Southern was unable to fully characterize Building 590 HVAC system performance.

Southern's conclusion is that conditions at Building 590 may not be representative of typical HVAC system performance at other sites. This conclusion does not substantially impact the ability to evaluate of the performance of the solar chiller system in isolation, but did have an effect on the evaluation strategy as presented in the demonstration plan. Specifically, Southern was forced to conclude that comparison of system performance with baseline conditions using the strategy presented in the demonstration plan would not be representative and a new approach to evaluate energy savings based on direct measurements of solar energy input the system was adopted.

The condition of the HVAC system at Building 590 also has an impact on the perceived acceptability of the system to the building occupants and PIFMD. If the building remains uncomfortable, the new system may be perceived as inadequate. In addition, the energy savings gained by installation of the solar chiller

system might have been more easily realized by proper maintenance and repair of existing system as well as modifications to building usage practices as outlined in the PowerPartners report.

3.3 Implementation Criteria

Solar thermal hot water and adsorption chilling systems are suitable for installation at buildings/facilities where there is sufficient, unobstructed, un-shaded roof or other nearby area to install solar collector capacity adequate to provide a hot water supply that is sufficient to offset the costs of the system over a reasonable period of time. There must also be space available for the chiller and associated piping and equipment including piping, pumps, hot water storage, and heat removal equipment. The location must also provide sufficient solar radiation on an average, annualized basis to realize the benefits of the system.

For retrofit applications (as opposed to new construction), the existing HVAC system should be compatible with centralized chilled water distribution to air handlers for cooling. In such applications, particular attention must be given to integration of existing and new systems and controls in order to fully realize the benefits of the system. It is also important to verify that existing HVAC components and controls are properly maintained and operating within specification so that accurate information is available to support retrofit system design and integration and so that the integrated system will function as intended.

4.0 PROJECT NARRATIVE

Multiple implementation issues and changes to plan were encountered over the course of this project such that interpretation of the results is not straightforward without an understanding of the issues encountered. The following project narrative summarizes and explains each of these issues in a chronological manner. The narrative is intended to serve as an aid to interpreting the demonstration results and as documentation of the efforts undertaken to achieve a successful demonstration. A complete project timeline is provided in Appendix B.

4.1 Site Selection

Site selection activities took place in the fall of 2009, and the site selection memorandum was submitted on December 3, 2009. The 1st Battalion mess hall (Building 590) located at Parris Island Marine Corps Recruit Depot (PIMCRD) was selected from a number of candidate sites due to a number of favorable factors including:

- greater than 5000 annual cooling degree-days
- greater than 60 RT cooling load
- substantial domestic hot water load
- existing absorption chiller nearing the end of useful life
- availability of substantive technical documentation and drawings for the building HVAC system
- availability of compatible existing equipment (e.g., air handlers and piping)
- availability of a supplemental heat source (steam)
- availability of a facility-wide Building Management System (BMS) that might be used to facilitate demonstration data acquisition
- enthusiastic support and responsiveness from the PIMCRD energy manager

4.2 Baseline Testing

On March 26, 2010, Southern made a site visit to Parris Island to meet with Parris Island Facilities Management Division (PIFMD) personnel and mark sensor locations on existing piping in the Building 590 mechanical room for baseline monitoring. Following this visit, PIFMD installed sensor ports at the marked locations.

After the demonstration plan was approved on July 12, Southern returned to Parris Island (PI) to install baseline monitoring instruments and connect them to the BMS for data acquisition. PIFMD had agreed to provide an expansion panel to the Automated Logic BMS that would serve for data acquisition from Southern's sensors. Upon arrival, Southern found that the expansion panel had not been provided and that, due to security restrictions, Southern's programmer would not be permitted to perform the necessary BMS programming. Nonetheless, Southern was able to quickly procure and assemble the necessary equipment and baseline data acquisition began on July 17, 2010. Baseline monitoring continued through December 15, 2010.

Following the baseline monitoring period, it was discovered that, due to erroneous information on the routing of existing piping, the chiller return temperature sensor was improperly located on supply piping with the result that no data on the baseline absorption chiller load (serving the dining area) was acquired. In addition, Southern's field team was provided with an incorrect version of the baseline monitoring schematic that omitted sensors intended to measure the cooling load on the electric chiller, so these sensors were not installed and the baseline cooling load on the kitchen area was also not determined. An

estimate of the kitchen area cooling load during the months of November and December may be obtained from power consumption measurements for the conventional chiller that were obtained during baseline monitoring. Extended test data show that, when operating properly, the conventional chiller consumed about 1.1 kW per refrigeration ton output.

Overall, the baseline data are of limited utility for determining the comparative energy savings realized from the solar chiller system. That said, the heat input to the system from the solar array was continuously monitored during the long term monitoring period as were parasitic loads from the additional pumps and equipment. These data allow the net energy savings due to the solar chilling system to be determined as an offset from the solar energy input to the system, accounting for the difference in parasitic loads between the baseline and test system. Details of this approach are presented in section 6.2.3 below.

Details of the baseline monitoring results are presented in section 5.3 below.

4.3 Factory Acceptance Test

Southern witnessed the factory acceptance test (FAT) of the adsorption chiller on July 26, 2010 at the PowerPartners facility in Athen's Georgia. PowerPartners maintains a test cell that is able to supply chilled water, hot water to power the chiller, and cooling water to remove rejected heat over a range of temperature and flow conditions. The chiller cycle time can be adjusted to optimize either tonnage output or chiller efficiency (COP) for a given set of chilled water, hot water, and cooling water conditions. Southern observed tests under four sets of conditions and PowerPartners delivered results to Southern for a total of 32 sets of test conditions. Chiller performance was deemed acceptable by Southern based on a test (number CT109) that yielded 76 RT chilling capacity at a COP of 0.57 using hot water at 160 °F.

FAT conditions spanned the specified conditions in the chiller submittal package; however, site conditions did not match FAT conditions at any time during the extended monitoring period, so it was not possible to verify that the field performance of the chiller matched FAT performance. Details of the FAT test results are presented in section 5.4.

4.4 Construction

On January 6, 2011, Southern convened a construction kick-off meeting at the PIFMD offices. The meeting was attended by representatives from PIFMD, Vanir Energy, PowerPartners, and PIFMD's controls contractor (CTS, Inc.). A number of details were worked out during the meeting. PIFMD committed to decommissioning and removal of the existing chiller, provision of a temporary power plant to be used during construction, modification of the Building 590 mechanical room door to allow for removal of the old chiller and installation of the new chiller, and providing receiving and warehouse space for construction materials. Permitting and inspection details were addressed.

Racking material to mount the solar panel arrived on site in February 2011 and construction commenced shortly thereafter. The adsorption chiller was installed on May 24, 2011, at which time mechanical room piping modifications were largely complete and SRI made a site visit to locate and mark sensor port locations for extended monitoring.

Southern installed extended monitoring sensors and data acquisition equipment during June, 2011 and extended monitoring data collection began on July 1, 2011. Initial construction activities proceeded according to plan and approximately on schedule; however system commissioning was a drawn out process due to design and controls changes necessary to allow the system to function.

4.5 Initial Commissioning, Re-design, and Re-commissioning

System commissioning was initially planned for the week of August 10, 2011; however, due to delays in finalizing the control specification, controls programming could not be completed and commissioning was delayed. Initial system commissioning took place September 28-29.

In the original system design, the chiller was to receive hot water from either the solar array or steam according to solar availability as controlled by a 3-way diverter valve. However, there was no buffer capacity designed into the short run of piping from the 3-way valve through the steam heat exchanger to the chiller. PIFMD's controls contractor (CTS) had expressed reservations about the ability to adequately control the steam valve to maintain a constant hot water supply temperature to the chiller given the limited buffer capacity; however, an attempt was made to operate the chiller in the original design mode. When the chiller was initially brought on-line using steam heat, thermal expansion of the hot water in the limited piping volume was sufficient to separate hot water supply pipe couplings on the chiller and release hot water into the mechanical room. The pipe couplings were refitted and the 3-way valve was manually set to deliver hot water first through the solar buffer tank and then to the steam heat exchanger. The chiller was then brought on line and successfully produced chilled water using steam heat. However, the building steam supply was inadequate on that day (9/28) due to a faulty pressure relief valve, so continued use of the portable chiller was necessary to maintain a comfortable indoor temperature.

The following day (9/29), the solar array was brought on line and the solar hot water served to increase the hot water temperature in the solar buffer tank above the 155 °F set point maintained by steam to 170 to 180 °F during daylight hours. Chiller output increased from about 40 RT at the base temperature maintained by steam to about 50 RT at the higher hot water supply temperatures when additional solar heat was provided. The system continued to operate for about four days before shutting down due to an interruption of the hot water flow. It was later determined that air entrapped in the hot water supply piping was the cause of the flow interruption.

During this trip, PowerPartners also conducted operator training on the operation of the chiller with PIFMD staff.

On October 3, 2011, Southern met with Vanir Energy and their HVAC contractor, Central Carolina Air Conditioning (CCAC) to finalize an operational and control strategy given that the original design configuration was unworkable. It was decided to continue operation with the 3-way valve fixed such that the solar buffer tank would be pre-heated by steam to a minimum temperature and heat input from the solar array would increase the buffer tank temperature as solar energy was available. Chiller output would increase as the hot water supply temperature increased due to solar heat input and this would occur during the hot part of the day when additional chilled water tonnage was needed. As operating experience was gained, the steam heat set point and chiller cycle time would be adjusted to provide adequate cooling on steam heat alone while keeping the steam heat set point (baseline buffer tank temperature) as low as possible to take maximal advantage of solar heat input. The 3-way valve would be eliminated and piping re-routed in a permanent configuration to preheat the solar buffer tank using steam.

Over the remaining weeks in 2011, the system ran intermittently due in part to planned shut downs to install a new cooling tower and repair building steam piping. In addition, there were shut downs due to entrapped air in the hot water and condenser loops. Vanir discovered that a pressure equalization line was required across the chiller between the hot water and condenser loops to prevent over-pressurizing the hot water loop. The equalization line was installed on December 5, 2011. The system was restarted and ran for several days before shut down due to entrapped air in the condenser line.

During this time, Southern discovered that the solar array was sized to provide a maximum of only about 20-30 RT cooling from the chiller (see section 6.2.1). The contract specification was for the solar array to be able to provide at least 60 RT of cooling at a chiller COP of 0.6. The change in specification was made by Vanir Energy based on limited available roof area and cost considerations, but this decision was not communicated to or approved by Southern prior to having been carried out. When Southern independently calculated the expected output of the solar array after installation, Vanir confirmed the change in specification. With this change, the original design intent to supply heat to the chiller from either solar or steam energy alone would not have been able to provide sufficient cooling on solar energy alone, and the buffer tank would have to have been preheated by steam as turned out to be necessary for

other reasons as described above.

On January 24, 2012, Southern met with Vanir, CCAC and the solar system representative, Ritter, to kick off a design review intended to address all of the deficiencies in system operation. On February 13, 2012, Vanir submitted an action plan to Southern to resolve the operability issues that included the following tasks.

- Installation of a new condenser side expansion tank
- Installation of an improved pressure balance line between the hot and cold sides
- Installation of an additional PRV between chiller and steam heat exchanger
- Installation of air purge vents

In addition, the 3-way valve was removed and piping re-routed to preheat the solar buffer tank with steam. Piping was also rerouted so that hot water was pulled from the top of the buffer tank rather than the bottom (due to an error during the installation).

On March 20, 2012, system reconditioning had been completed and Vanir was on site with CCAC, Ritter, and PowerPartners to re-commission the system. The absorption chiller resumed operation on steam, but damage was found in the solar array piping that prevented the solar array from being brought back on line. During this trip, the chiller was re-sealed, re-commissioned and deemed to be operating properly by PowerPartners.

Repairs to the solar array involved bypassing the supply header piping to the solar array and abandoning the existing piping in place. The design of the original supply headers to the solar array was integral to the panels and proved inadequate to withstand the high pressure that occurred when the system stagnated during a period when manual valves were closed preventing the expansion tanks from taking up the excess pressure. It was also found that the solar loop pumps had failed, and these were replaced. The repairs were completed and the solar array was re-commissioned on May 16, 2012.

4.6 Operations

The system continued to operate over the Summer of 2012, however, chiller performance was lower than expected, not exceeding about 45 RT, with hot water supply temperatures ranging from a base of 160 °F on steam to about 175 °F with solar heat input. According to PowerPartners, the cause of the lower than expected chiller output was inadequate heat removal in the cooling tower loop. Cooling water supply temperatures often approached 100 °F over the summer versus the chiller submittal package specification of 85 °F. In addition, cooling water flow, at about 470 gpm, was well below the 550 gpm specification. Although, the chiller itself appeared to be functioning normally, PowerPartners was unable to predict the expected performance of the chiller under conditions that deviated to this degree from design conditions.

Another factor that had a confounding impact on chiller performance was that the condensate removal system for the steam heat exchanger utilized existing equipment that was undersized. The steam heat exchanger would flood with condensate and its efficiency was greatly reduced. This situation was temporarily remedied by cracking open the valve at the bottom of the heat exchanger and allowing the condensate to drain into a floor drain. PIFMD reportedly installed adequately sized condensate removal equipment during the summer of 2013, after Southern's monitoring had ceased.

Southern independently prepared calculations that showed that the 1.5 inch steam control valve was undersized and would not be able to provide sufficient steam to realize the full 80 RT rated capacity of the chiller. Vanir completed their own calculations and concurred with the result.

On August 10, 2012, Southern was on site to perform maintenance on the monitoring system and noticed, based on pressure gauge readings, that the heat exchanger on the cooling loop between the cooling tower and the chiller appeared to be fouled. Southern confirmed this by measuring the flow on the tower side of the heat exchanger with an Ultrasonic flow meter. The flow on the tower side was 120 gpm versus 470

gpm on the chiller side of the heat exchanger.

On September 12, 2012, PIFMD attempted to chemically clean the heat exchanger in place, but this was found to be ineffective. On December 1, 2012, PIFMD disassembled the cooling tower heat exchanger and found severe mineral build up. It was discovered that when the cooling tower had been replaced in late 2011, the water treatment system had been removed and was not re-installed to treat the water in the new tower. In January 2013, PIFMD commenced work to mechanically clean the heat exchanger and install a water treatment system on the cooling tower to prevent mineral buildup in the tower and heat exchanger. This work was completed on March 8, 2013.

In September of 2012, Southern renegotiated with Vanir Energy to ensure that Vanir met a number of conditions to ensure successful operation and handover of the system. These conditions included:

- making a reasonable effort to achieve 80 RT of continuous output capability from the adsorption chiller , specifically providing at least 550 gpm condensing flow and providing sufficient energy input and heat removal to achieve 80 RT at the expected coefficient of performance (COP),
- making provisions to deliver sufficient thermal energy utilizing PIFMD delivered steam at 15 psi supply pressure to achieve 60 RT output from the adsorption chiller with 50F chilled water output during normal indoor temperature conditions,
- completing the interconnection between the BMS controls system provided by PIFMD and the domestic hot water (DHW) system previously installed by Vanir, and commissioning and demonstrating satisfactory operation of the DHW system,
- delivering final mechanical and construction drawings and control specifications incorporating all system changes during the optimization process,
- delivering a handover package that includes equipment specifications, control sequences, and operating and maintenance procedures for the system and providing training to PIFMD operators
- submitting all documentation reasonably required to facilitate transfer and acceptance of the system by PIFMD

Installation of a larger (2 inch) steam valve and larger pumps (rated at 575 gpm) for the cooling loop was completed as of April 26, 2013; however wiring of the pumps was delayed since the larger motor controllers did not fit in the existing motor control panel and a new panel and controllers had to be installed.

On May 28, 2013, Vanir and Southern were on site to restart the system. Vanir found that the solar field was leaking at a number of solder joints in the copper piping and was unable to re-commission the solar array. The leaks were apparently caused by high temperatures that occurred during frequent stagnation events when the chiller was inoperable that melted the solder that was used during assembly. The solar system had stopped functioning in mid-November 2012. Though this failure was reported in Southern's weekly updates and monthly status reports, Vanir did not assess the condition of the solar system prior to a site visit on May 7, 2013. At that time, a few leaks were located and repaired, but the full extent of the leakage was not determined. Also on the May 28 trip, the cooling tower heat exchanger was found to be leaking significantly after cleaning and reassembly by PIFMD. The system was not restarted.

The system was restarted on June 10, 2012 using steam only. The tower heat exchanger was still leaking; however PIFMD determined that the pressure differential was such that water would move from the condenser side to the hot water side and, as there was make up water on the condenser side, the system could be operated while the leak continued.

While waiting for solar field repairs to be complete, Southern initiated efforts to increase tonnage output from the chiller to better meet the cooling demand of the building. On June 21, 2013 PIFMD increased the hot water supply set point to 185F and chiller output increased about 5 RT (from 47 to 52 RT). On June 27, 2013, PowerPartners worked remotely with PIFMD to decrease the chiller cycle time from 7

minutes to 4 minutes to observe the effect on tonnage output. PowerPartners requested that Southern increase the data recording frequency from 10 minutes to 10 seconds in order to record diagnostic data that would allow PowerPartners to evaluate chiller performance in detail. When the data recording interval was decreased, a relay in Southern's data logger seized resulting in a short circuit in the data acquisition system causing system failure.

As there had been numerous delays in project implementation and Southern's contract with ESTCP was drawing to a close, Southern consulted with ESTCP on whether monitoring should continue. ESTCP concurred with Southern that monitoring should be concluded and directed Southern to proceed with reporting. ESTCP directed Southern to ensure that all system implementation issues were thoroughly documented in the report.

Solar field repairs were completed and the system reportedly resumed operation with solar energy input on July 18, 2011. Southern made arrangements for PowerPartners to use Southern's cellular router to receive data from the chiller's PLC so that efforts to optimize chiller performance could be continued; however, to date, PowerPartners has been unable to successfully coordinate this effort with PIFMD. Southern also offered to assist Vanir in utilizing Southern's monitoring equipment so that Vanir could continue to monitor system performance. Vanir did not respond to this offer.

4.7 Domestic Hot Water System Implementation

The project narrative given above is focused on the solar chiller system; however the system design and demonstration plan also provided for utilizing solar thermal energy for domestic hot water (DHW)when not required for cooling, such as in winter months or other times of low cooling demand.

Vanir's initial design for the DHW system was to use solar thermal energy to preheat water fed into the existing Armstrong steam heated demand DHW system. During system construction, it was discovered that the proposed solar preheating solution was not compatible with the existing equipment. During July, 2011, Vanir devised an alternative system wherein the solar domestic water system operated in parallel with the Armstrong system and solar hot water was provided when available.

The DHW system was installed during the fall of 2011, but controls wiring and programming were not completed. Operation of the DHW system was not a top priority during the winter of 2011/12 as there were significant issues being addressed with operation of the solar chiller system as described above. Southern made a number of efforts throughout 2012 to encourage Vanir and/or PIFMD to complete controls wiring and programming so that the performance of the DHW system could be evaluated. Southern renewed these efforts in the fall of 2012 as the winter of 2012 would be the last chance for the DHW system to function before the conclusion of the demonstration. These efforts were unsuccessful.

In the fall of 2012, Southern provided Vanir with DHW usage data to be used to estimate the effective capture of solar thermal energy for DHW heating. Using these data, Vanir's engineer calculated that the DHW system would be able to utilize 56 percent of the available solar thermal energy, but that the solar array would stagnate (see section 2.1.2) before noon each day due to the building's DHW usage pattern. DHW usage at Building 590 peaks each day at about 0600, 1200 and 1800 corresponding with preparation and cleanup of the three daily meals. After the morning peak, DHW usage is low and, as there is insufficient demand for the solar energy, the panel array will stagnate and no further solar thermal energy will be generated until the following day. Vanir made no provision in the DHW system design to dissipate excess solar heat to prevent stagnation although this issue was discussed during the DHW system re-design process during the summer of 2011.

Vanir reports that the DHW wiring and controls were completed in July 2013 - after the conclusion of the demonstration period. Since this occurred after the demonstration period was formally concluded, Southern was unable to evaluate the performance of the DHW system. Since the chiller system at Building 590 is enabled year-round and can easily utilize all of the solar thermal capacity, Southern does

not expect the DHW system to provide a significant benefit.

4.8 System Handover to Parris Island

Southern initiated property handover arrangements with Parris Island in April 2013. Parris Island's energy manager indicated that he would accept the property transfer and put Southern in touch with Parris Island's property manager. The property manager inspected the equipment at Building 590 over the summer of 2013 and on September 4, 2013 requested that Southern submit a draft form DD1354 to complete the transfer. Southern submitted the DD1354 form the same day. The final property transfer was concluded on October 1, 2013.

4.9 Operations Summary

Table 1 below summarizes the operating status of the test system from initial commissioning (September 2011) through the end of the demonstration monitoring period (June 2013). The only significant period of full system operation was between May and October, 2012; however, during this period, chiller performance was sub-par due to inadequate heat removal caused by insufficient condenser loop flow and (as it was later discovered), a partially plugged heat exchanger in the condenser loop. In addition, during much of this period system performance was unrepresentative because the conventional chiller installed in series with the adsorption chiller was not properly controlled, which altered, and tended to suppress, adsorption chiller output. Finally, there were fairly frequent power or steam supply outages at Building 590 which further restricted the operational periods available for evaluation.

In sum, during the extended course of the demonstration, there were only a select few periods where the adsorption chiller performance could be properly evaluated. Southern's assessment of chiller performance during these periods is presented in section 6.3.1. Southern's assessment of solar array performance is presented in section 6.3.2.

There were no operational periods when all system conditions matched the submittal specifications or factory acceptance test data for the chiller. Thus, it was not possible to determine quantitatively whether the field performance of the chiller met expectations.

Table 1. Operational Summary

Start Date	End Date	System Status	Notes
9/28/11 0:00	10/26/11 2:30	Intermittent operations and troubleshooting.	
10/27/11 0:00	3/20/12 0:00	System offline for repairs and redesign.	
3/26/12 0:00	5/2/2012 15:30	Chiller operating, solar field out of service. Building steam supply limited. Hot water supply temperature to chiller was 150 F (165 F set point).	Chiller started on 3/20, but went down until 3/26 due to building steam system repairs.
5/2/12 15:30	5/16/12 23:50	Chiller operating, solar field out of service.	Cycle time changed from 11 minutes to 7 minutes on May 9.
5/17/12 0:00	5/24/12 15:00	Full system operating, but sub-par chiller performance due to inadequate heat removal (later determined to be caused by a fouled heat	

Start Date	End Date	System Status	Notes
		exchanger).	
5/24/12 15:00	6/28/12 0:00	Full system operating, but sub-par chiller performance due to inadequate heat removal (fouled heat exchanger). Operating period not representative due to conventional chiller performance issues.	Loud bang heard on 5/24. Appears that conventional chiller was damaged. Conventional chiller power consumption was high and chilling output low.
6/28/12 0:00	7/15/12 0:00	Full system operating, but sub-par chiller performance due to inadequate heat removal (fouled heat exchanger). Operating period not representative due to uncharacteristic conventional chiller performance.	One or more conventional chiller compressors off line.
6/28/12 0:00	10/7/12 15:10	Full system operating, but sub-par performance due to inadequate heat removal (fouled heat exchanger). Operating period not representative due to conventional chiller control issues.	Conventional chiller appears to have been set to operate only at maximum output, with the result that adsorption chiller output was suppressed.
10/7/12 0:00	6/10/13 0:00	System operated intermittently for part of the remainder of October 2012, then was off line until June 2013.	
6/10/13 0:00	6/27/13 9:50	Chiller only, solar field out of service.	SRI monitoring stopped at the end of this period.

5.0 TEST DESIGN

The test design as set forth in the demonstration plan evolved during the conduct of the demonstration in response to system design changes, implementation issues, and baseline data collection issues. The following sub-sections describe the intended test design and, where applicable, describe changes to the test design from the demonstration plan. Details of the demonstration plan test design may be found in the demonstration plan document [3].

5.1 Conceptual Test Design

As described above (section 3.2), the existing cooling system for Building 590 consisted of a lithium bromide absorption chiller powered by central plant provided steam. The demonstrated system consisted of a silica gel adsorption chiller powered by a solar thermal panel array with backup steam and a conventional electric vapor compression chiller operated in series with the adsorption chiller to provide backup cooling or make up the balance of the building cooling load as necessary.

In essence, the conceptual test design was to evaluate the performance of the existing system before modification as a baseline and compare this to the performance of the modified system to determine energy savings. Details of this approach are provided in the demonstration plan. In addition, the performance of the overall system, as well as the performance of major sub-components of the system, was to be characterized. Major sub-components included the adsorption chiller, the solar array loop, and the DHW system.

Due to limitations of the baseline data (see sections 4.2 and 5.3) and the condition of the facility HVAC systems, energy savings could not be determined by comparison of baseline and modified system performance. Instead, the solar thermal energy input to the system was considered to offset steam input to the system and the energy savings and associated emissions reductions were determined based on this offset. To make a valid comparison, the difference in efficiency (COP) between the pre-existing absorption chiller and the new adsorption chiller is taken into account, as well as the incremental difference in parasitic electrical load between the two systems. The methodology employed to determine energy savings is given in section 6.2.3 below.

5.2 Design and Layout of Technology Components

The System Under Test (SUT) consisted of the following:

- Roof-mounted solar collectors intended to be capable of driving the adsorption chiller to meet 60 RT peak cooling load. Note: Vanir actually delivered a solar panel array capable of meeting a maximum 20-30 RT cooling load (depending on achieved COP of the chiller and the duration the load is required to be sustained).
- An adsorption chiller rated at 80 RT cooling capacity. The difference between the solar collector availability and capacity and adsorption chiller capacity is met using steam.
- A 1000 gallon hot water storage tank. Note: the original design called for a 6000 gallon thermal storage tank. The tank size was decreased to fit within the mechanical room, avoiding the additional piping and expense of an outdoor tank installation.
- A steam heat exchanger sized to provide sufficient energy to the adsorption chiller to meet 80 RT cooling load.
- A cooling tower sized to meet the heat removal requirements of the chiller system. Note: the original plan called for using the existing cooling tower, but it was later determined that the existing tower lacked adequate capacity.
- A solar thermal powered domestic hot water system.
- Pumps, piping, expansion tanks, a compressor, backup generator and other ancillary equipment

necessary for operation of the system.
- Associated controls and instrumentation.

The existing air cooled electric chiller (60 RT capacity), formerly used solely for cooling the kitchen area, was integrated in series with the adsorption chiller to handle cooling loads in a manner intended to optimize the energy consumption and economics of the project. Although the operation of this conventional chiller is integrated with the SUT and its operational data was collected during the extended testing and partially collected during the baseline testing, the electric chiller was not formally considered part of the SUT. Schematics of the system before and after modification are provided in Appendix J.

Specifications for the absorption chiller and evacuated tube solar panels are provided in Appendix F.

The initial control specification was designed to maximize utilization of solar thermal energy and called for utilizing solar only or steam only to power the adsorption chiller. Utilization of available solar energy was to be prioritized in all cases. Due to the high cost of steam at the installation, the electric chiller was to be brought on line before steam was brought on line. Provision was made to alter the control priority should relative prices for steam and electricity change.

Due to inadequacy in the system design and the reduction in solar thermal capacity (as described in section 4.5 above), steam energy provided the base heat supply to the chiller in the demonstrated system and solar energy was utilized to increase chiller output as available. The electric chiller would make up the balance of the load as needed. Because the building cooling load was typically higher than could be met by the absorption chiller alone, the electric chiller operated and made up the balance of the load under most conditions. The control specification is provided in Appendix C.

The system configuration, as implemented, may sacrifice a portion of the available solar energy. The solar loop pumps run only when the temperature in the buffer tank is lower than the temperature in the solar array's collection header. Since the buffer tank is maintained at a fixed minimum temperature using steam energy, the pumps will not run as frequently and less of the available energy from the solar array may be captured for use by the system. That said, the measured solar capture precisely matched the expected solar capture (see section 6.3.2), so the impact of preheating the buffer tank with steam appears to have been negligible. This lack of impact is due to the fact that the chiller is able to immediately utilize all of the available solar heat input to the system. With a larger capacity solar field, preheating the buffer tank using steam would likely sacrifice a portion of the available solar energy as described above.

5.3 Baseline Characterization

In the demonstration plan, the measured steam and electricity consumption of the existing absorption and electric chillers were to be correlated against measured cooling loads in the dining and kitchen areas, respectively. In addition, the cooling loads were to be correlated against weather data. These relationships were to be used to predict the steam and electric energy consumption of the baseline system as a function of weather and cooling load. Energy savings were to be determined as the difference in baseline and test energy inputs adjusting for weather/cooling load. These differences were to be determined on a daily or hourly basis using a methodology for mapping test data to baseline data based on cooling degree-days/hours. Details of the method proposed to relate energy consumption and cooling loads to ambient conditions were provided in a technical article prepared by Southern [4].

The baseline data collected were found to be of limited representativeness and utility because, prior to construction of the new system, it was discovered that a number of existing building HVAC system subcomponents were not functioning properly (see section 3.2). The building condition would likely have confounded attempts to establish the necessary correlations between energy input and load that were necessary to the demonstration plan approach.

In addition, it was discovered that one of the baseline sensors was installed in an incorrect location due to misinformation on piping locations with the result that no valid data were collected on the cooling load of

the existing absorption chiller. Finally, no data on the electric chiller baseline cooling load was collected because Southern's field team were supplied with an incorrect drawing that did not show the required sensors, with the result that the sensors were not installed. The electric chiller power consumption was measured during a later portion of the baseline monitoring period. In sum, the collected baseline data are of limited utility for determining the comparative energy savings realized from the solar chiller system.

The baseline monitoring did serve, however, to provide information on the characteristics of the existing system that were used to help troubleshoot performance issues with the existing HVAC equipment with which the new system was integrated. The baseline data also provided DHW usage information that was used as input for the design of the DHW system. Finally, the baseline monitoring provided information that helped ensure that the monitoring system for the extended test would provide valid data. Due to the limited utility of the baseline monitoring data, a new approach was developed to determine energy savings and economic and environmental benefits based on the measured solar input as offset by the incremental parasitic electrical loads between the baseline and demonstration systems (see section 6.2.3).

A summary of baseline results is provided in Appendix D.

5.4 Factory Acceptance Test

Southern attended and observed the factory acceptance test on July 26, 2010 at the PowerPartners manufacturing plant in Athens, GA.. Southern observed four test runs; however, PowerPartners conducted numerous additional tests and provided data to Southern for a total of 32 test runs. The results of these test runs are provided in Appendix G.

Southern formally accepted the chiller based on the results of run CT109. In this run, the chiller was able to maintain a COP of 0.57 at an average temperature of 160 degrees Fahrenheit and at 76T capacity using a 21 minute cycle time.

Due to integrated system design and implementation issues, none of the FAT run conditions duplicated field conditions, so it was not possible to evaluate quantitatively whether the field performance of the chiller matched FAT performance. PowerPartners has reviewed the field performance results for the chiller and, in their best engineering judgment; the field performance of the chiller was acceptable given field conditions (e.g., supply temperatures and flows to the chiller).

5.5 Operational Testing

The demonstration plan called for a period of controlled testing wherein the peak output of the adsorption chiller and the performance of the conventional chiller would be evaluated. Due to ongoing system redesign and reconfiguration efforts and the inability to establish system conditions comparable to the chiller submittal specifications or factory test conditions there was no occasion during the demonstration when the controlled testing could be conducted. An assessment of adsorption chiller performance based on available data is given in section 6.3.1 below. When operating properly, the conventional chiller consumed about 1.1 kW per RT cooling output.

A summary of operational periods and system status during each of these periods is presented above in section 4.9.

5.6 Sampling Protocol

In general, the sampling protocol consisted of continuously logged measurements of temperature and flow sufficient to determine the heat input and output (RT or Btu/hr) in each heat input/output of the system. These components included:

- solar heat input,
- steam heat input,

- adsorption chiller output,
- cooling tower heat removal,
- electric chiller output,
- DHW loop heat output (from solar)

In addition, power consumption of all parasitic loads was either continuously monitored, or in the case of constant loads, spot measurements were made. These measurements included the power consumption of the:

- cooling tower fan,
- cooling tower pumps,
- chilled water pump,
- solar loop pumps,
- DHW loop pumps,
- chiller control and auxiliary power

Ambient conditions, including temperature, solar irradiance, and relative humidity were also monitored.

Data were logged at a 10 minute recording frequency using DataTaker DT85 data logger. Most sensors utilized 4-20 mA analog outputs. A total of over 40 sensor inputs were logged. The logger was connected to a cellular router with web interface that provided remote data acquisition and system configuration.

Southern downloaded and reviewed data on a weekly basis throughout the demonstration and issued status updates by email each week to all direct project participants (PIFMD, Vanir, and Power Partners). Data review consisted primarily of examination of time series plots of all parameters for each heat loop, comparison of measured and calculated values with expected results, and reasonableness and consistency checks.

When performance issues were noted, Southern requested corrective action from PIFMD, Vanir or PowerPartners as appropriate. When issues with sensor function were detected, Southern initiated corrective action to repair or replace the failed sensors. In some cases, surrogate data were used until a sensor issue could be resolved. For example, the solar flow meter failed in early July 2012 and it was several months before the unit could be retrieved from the field, repaired and put back into service. During the interim, power consumption readings from the solar pumps were used as a surrogate for solar loop flow. This was a valid substitution since the solar loop flow known (from prior data) to be constant whenever the pumps were operating.

5.7 Sampling Results

Monitoring data for all sensors were collected continuously throughout the demonstration. This resulted in very large data files. As discussed above (see section 4.9) there were relatively few periods where site and system conditions were such that system performance could be properly evaluated. Results for these periods are summarized in summary tables presented in Appendix H. Performance charts including an energy summary and building conditions summary are provided in Appendix I.

6.0 PERFORMANCE ASSESSMENT

Due to the numerous implementation issues described in detail in the project narrative (section 4.0 above) and elsewhere in this report, few of the demonstration plan performance objectives could be fully evaluated as set forth in the demonstration plan. Given these limitations, the following sub-sections present Southern's best effort to evaluate performance for each demonstration plan objective.

6.1 Summary of Performance Objectives and Results

Table 2 summarizes the demonstration performance objectives and results. None of the performance objectives were met.

Table 2. Performance Objectives and Demonstration Results

Performance Objective	Success Criteria	Results
Quantitative Performance Objectives		
Determine peak cooling capacity of the SUT	Peak cooling capacity of SUT must be greater than 80 RT	Objective not met. Maximum sustained cooling was 52.8 RT.
Determine max cooling capacity of the SUT when driven by solar energy only	When DHW solar energy demand is zero, peak cooling capacity of SUT must be greater than 60 RT without supplemental steam	Objective could not be evaluated. The final system design did not permit the system to be operated on solar output alone.
Steam energy reduction	Steam energy reduction will exceed 800 MMBtu/yr including Cooling and DHW	Objective not met. Annualized net steam energy reduction over baseline was 703.8 MMBtu/yr.
Emission foot print reduction	Reductions exceed: 79 metric tons CO2e per year relative to baseline.	Objective not met. Net GHG emissions reduction was 32.1 metric tons CO2e per year.
Equipment Availability and Reliability	>99% availability. >99% reliability.	Objective not met. Overall system availability and reliability could not be quantitatively assessed due to ongoing operational issues throughout the demonstration.
Assess Economic Performance	Simple payback < 7 years; Positive NPV based on ECAM and BLCC	Objective not met. Site specific payback will not be achieved within the system lifetime.
Qualitative Performance Objectives		
Determine Ease of use	The average points above neutral (or above three points)	Objective could not be fully evaluated as the system did not achieve stable, routine operations during the demonstration period. The system is complex and unfamiliar. Training and documentation were incomplete as of the end of the demonstration. Implementation issues complicated operations.

6.2 Performance Results for Demonstration Plan Objectives

The following sub-sections provide details on how each performance result was determined, and discuss the issues encountered in evaluating each objective.

6.2.1 Peak Cooling Capacity

The maximum sustained cooling output of the test system that was measured during the demonstration (exclusive of the contribution of the electric chiller), was 52.8 RT (see section 6.3.1). This result falls short of the 80 RT performance objective. Improved cooling capacity might be achieved by optimizing the chiller cycle time set point, providing a higher hot water supply temperature or increasing condenser or chilled water flow rates. The chiller was shown to be capable of producing up to 109 RT chilling output under optimal conditions during the factory acceptance test.

6.2.2 Maximum Cooling Capacity Driven by Solar Energy Alone

Due to the reconfiguration of the system such that steam energy provided a base heat input to the chiller supplemented by solar energy as available (see section 4.5), the chiller was not able to be driven by solar energy alone. In addition, due to the reduction in solar array capacity from the original design (see section 4.5 and 6.3.2), the system would have been incapable of meeting the building cooling load on solar energy alone. For these reasons, it was not possible to evaluate the maximum cooling capacity of the system when the chiller was driven by solar energy alone.

Nonetheless, a first order estimate of the maximum cooling capacity of the installed system when driven by solar energy alone can be obtained given the chiller COP and the maximum measured output of the solar field.

Chiller COP ranged from 41% to 53% over the representative operational periods summarized in Appendix H. This range is somewhat lower than the 53% specified in the chiller submittal package figures. Overall, the achieved chiller COP may reasonably be taken as 50%.

The maximum solar field output measured was 4.5 MMBtu/day, equivalent to an average of 15.6 RT output over a 24 hour period. On clear, sunny days, solar field output typically peaked at over 60 RT. The maximum solar output in any 10 minute data collection interval was 71.4 RT. At 50% COP, the peak cooling capacity on solar heat input alone would be about 30RT.

On a maximum solar output day (e.g., 6/29/12) , total solar output was 4.5 MMBtu and the solar field was active (pumps cycling) for a total of 9.33 hours, yielding an average output during solar energy production of 40.1 RT. At 50% chiller COP, the maximum sustained cooling output on solar energy alone would be about 20 RT.

Thus, it is reasonable to state that the maximum cooling capacity of the system, as built, is in the range of 20-30 RT. However, this estimate presumes that the solar heat input would be sufficient to maintain a high enough buffer tank temperature for the chiller to operate effectively.

6.2.3 Steam Energy Reduction

Due to the limitations of the baseline data (see section 5.3), and given the few periods when the installed system was operating near specification (see section 4.9), it was not possible to apply the demonstration plan strategy for determining the steam energy reduction. Therefore, the only means available to estimate the steam energy reduction is to regard the solar energy input to the buffer tank as an offset to energy that would otherwise have been supplied by steam.

This approach neglects heat losses in the hot water piping from the buffer tank to the chiller; however, such heat losses would be minimal due to short piping length and high flow.

The approach also neglects the impact of any difference in load on the electric chiller between the baseline and test system operation. Such differences could have an impact on the steam energy reduction if, for example, the electric chiller was taking on more of the building load with the test system than with the baseline system so that the demand on the adsorption chiller was reduced resulting in lower steam usage. Although the electric chiller load was measured (indirectly via power consumption measurements)

during part of the baseline monitoring period (Nov/Dec 2010), and throughout the extended monitoring period, there were no comparable periods when the test system was operational that could be used to assess any difference in load. This was further complicated by the fact that there were frequent control and operational issues with the electric chiller such that, in many cases, the measured electric chiller load was not representative of normal operation.

Another factor to be considered in determining the steam energy reduction relative to the baseline system is the difference in efficiency (COP) between the pre-existing absorption chiller and the new adsorption chiller. Since the efficiency (COP) of the pre-existing absorption chiller was not able to be determined from the baseline monitoring data, this value was estimated from literature data. Typical values for the COP of absorption chillers range from 65 to 70 percent. For the purpose of this analysis, since the absorption chiller at Parris Island was nearing the end of its useful life, the COP is taken as 65%.

Because the solar field was never operational over the course of a complete year, a method was developed to annualize solar energy input to the system based on a standard industry model for forecasting the performance of solar thermal arrays (see section 6.3.2). Based on this combination of measured and modeled results, the most representative value of gross annual solar energy input to the system is 914.9 MMBtu/year.

If the achieved COP of the adsorption chiller is taken as 50% (see section 6.3.1), the relative COP of the test vs. baseline chiller is 50/65 or 76.9%. Thus, the net steam energy reduction for the test system would be 77% of 914.9 MMBtu/yr or 703.8 MMBtu.

This value (703.8 MMBtu/yr) approaches the success criteria of 800 MMBtu/yr for the steam energy reduction; however, due to the uncertainties in the analysis, it cannot be stated for certain whether the success criteria was achieved or not achieved. For example, if the achieved COP for the test chiller had been somewhat higher or the COP of the baseline chiller had been somewhat lower, the criteria might have been met. For example, if the COP for the adsorption chiller had been at the acceptance test condition (57%), the steam energy reduction would have been 802.3 MMBtu/yr – just meeting the success criterion.

Table 3 summarizes the values and calculations in the discussion above.

Table 3. Steam Energy Reduction over Baseline

Item	Value	Units	Source	Notes
Annualized solar input to buffer tank	**914.9**	MMBtu/yr	Representative value selected from available estimates. See section 6.3.2	This value taken as gross steam energy reduction.
COP of pre-existing absorption chiller	65%	%	DOE EERE	Typical COP values are 0.65 to 0.7, lower value used here because the equipment was nearing the end of its useful life.
COP of adsorption chiller	50%	%	Assessment of chiller performance (see section 6.3.1)	
Relative COP test: baseline	76.9%	%	Calculation.	

Item	Value	Units	Source	Notes
Net steam energy reduction compared to baseline	**703.8**	MMBtu/yr	Calculation.	

6.2.3.1 Domestic Hot Water

The foregoing analysis does not include consideration of any steam energy reduction due to the solar DHW system installed at Building 590. As discussed above (section 4.7), the DHW system was not completed and operational before the end of the demonstration monitoring period, so no assessment based on actual monitoring data can be made.

Using a DHW diurnal load profile supplied by Southern from baseline monitoring data, Vanir Energy modeled the performance of the DHW system, as installed. In summary, the available solar energy is sufficient to provide approximately 56% of the DHW demand at Building 590 on a year-round basis, and about 46.5% during the winter months (November through February). That said, due to the cyclical nature of DHW demand at Building 590 (3 daily peaks corresponding to meal preparation), the solar field would stagnate after the first peak each day and no longer be able to provide heat input to the DHW system. Therefore, the actual heat recovery from the solar field for DHW use would be only about 1/3 of the potential. The solar array currently has no provision for dumping excess heat to prevent stagnation; however, such a provision would increase the fraction of available solar array output that could be utilized for DHW.

That said, under current building management rules at PI, the cooling system at Building 590 is operational year-round and can readily consume all of the available solar energy even in winter months. So, under current building management rules, it is not expected that the DHW system will contribute at all to solar thermal utilization.

6.2.3.2 Parasitic Loads

In addition to the steam energy reduction, the test system had the potential to reduce the electrical demand of the cooling system at Building 590. For example, the demonstration called out the low electrical demand of the absorption chiller as an advantage of the system. The existing absorption chiller consumed 5 kW while the new adsorption chiller demands only 0.67 kW (including controls and an auxiliary air compressor and dryer). In addition, the cooling tower fan load on the new system was reduced by employing a VFD controlled fan that only consumes as much power as necessary to provide the necessary cooling.

However, the new system has additional pumps for the solar loop, plus an additional pump on the cooling tower loop as this loop is divided by a heat exchanger to prevent the open cooling tower water from contaminating the cooling water entering the adsorption chiller. Moreover, in the spring of 2013, the cooling tower loop pumps were increased from 7.5 HP to 15 HP in an effort to increase the cooling loop flow in order to achieve the expected output from the adsorption chiller. The net effect is that the electric power consumption of the new system significantly exceeds that of the baseline system. Baseline system parasitic loads totaled 23.3 kW (see Appendix D for a breakdown by component). Test system parasitic loads totaled 36.7 kW (see Appendix E for a breakdown by component). Thus, net parasitic loads for the test system versus baseline are 13.4 kW higher on a continuous basis. With the original 7.5 HP pumps, the net parasitic load was only 2.1 kW higher. This difference is taken into account in determining the emission footprint reduction in section 6.2.4 below.

Note that the net parasitic load will be site specific as this depends on the retrofit system configuration as well as particulars of piping head pressure in each loop for a given site.

6.2.4 GHG Emission Footprint Reduction

The GHG emission footprint reduction attributable to the solar chiller system compared to the baseline system is the result of (1) the decrease in natural gas usage attributable to the steam energy reduction and (2) the change in parasitic load between the baseline and test system. The considerations taken into account in determining GHG emissions reductions associated with each of these factors are presented in the sub-sections below. The decrease in natural gas usage is associated with a GHG emissions reduction of 76.3 metric tons CO_2e per year. There was an increase in electricity consumption of the installed solar chiller system over the baseline system that is associated with a GHG emissions increase of 44.1 metric tons CO_2e per year. Thus, the net GHG reduction is 32.1 metric tons CO_2e per year, which is significantly short of the 79 metric ton CO_2e GHG reduction goal.

Details of the calculation and values used in these determinations are given in Table 4 below.

6.2.4.1 Reduction in Natural Gas Combustion

The decrease in natural gas usage depends on the amount of natural gas that is consumed at the central steam plant to deliver a given amount of steam energy to the chiller at Building 590. This determination depends on the efficiency of the steam plant, the heat losses in the distribution system (distribution efficiency), and the efficiency of the steam heat exchanger. According to the PIFMD energy manager, a value of 74% is normally used at the base for efficiency of the PI steam plant.

Distribution efficiency is difficult to quantify. PIFMD does conduct periodic steam studies that account for heat losses in the distribution system overall, but the heat losses to a particular building cannot be derived from these studies. The steam distribution system at PI is an above ground system and is aging, so distribution losses are likely to be high.

Available estimates of steam distribution efficiency vary considerably and depend on multiple site specific factors. Typical distribution efficiencies for a well maintained plant are 85 to 95 percent. A neglected system may have a distribution efficiency of only 40 to 70% [5]. In a 1995 report, the USACE found that distribution losses were 50 percent or greater [6] at the installations studied.

For the purpose of estimating the decrease in emissions due to natural gas combustion attributable to the solar energy input, the larger the distribution losses, the larger the associated emissions reductions. Thus, a conservative estimate of distribution efficiency would be on the high end of published estimates. However, given the age and state of the distribution system at PI, it would be unrealistic to presume too high a value. Given these considerations, a distribution efficiency of 75% was selected for the purpose of obtaining a conservative estimate of emissions reductions.

Based on the discussion above, the GHG reduction associated with the reduction in natural gas usage at the PI central steam plant amounts to 76.3 metric tons CO_2e per year.

6.2.4.2 Reduction/increase in Electricity Consumption

As presented above (section 6.2.3.2), the total parasitic load of the solar chiller system installed at Building 590 exceeded the total parasitic load for the baseline system by 13.4 kW. This additional load is associated with an increase in GHG emissions amounting to 44.14 metric tons CO2e per year.

Table 4. GHG Emissions Reductions

Item	Value	Units	Source	Notes
GHG reduction associated with steam energy reduction (natural gas combustion)				
Net steam energy reduction relative to baseline	703.8	MMBtu/yr	See section 6.2.3.	This value taken as steam energy offset.

Item	Value	Units	Source	Notes
Steam plant efficiency	74%	%	Email with Rick Pierce, 9/26/2012	
Steam heat exchanger efficiency	90%	%	Heat exchanger specification.	
Distribution efficiency	75%	%	See report discussion, section 6.2.4.	
Total delivered efficiency	50%		Calculated	
HHV of natural gas	1012	Btu/scf	Constant	
NG annual energy offset	1409	MMBtu/yr	calculated using all efficiencies	
NG annual usage offset	1.39	MMscf/yr	calculated using heating value of natural gas	
Emission Factors				
CO2, natural gas combustion	120,000	lb/MMscf	EPA AP-42 Table 1.4-2	rating A
N2O, natural gas combustion	2.2	lb/MMscf	EPA AP-42 Table 1.4-2	uncontrolled, rating E
CH4, natural gas combustion	2.3	lb/MMscf	EPA AP-42 Table 1.4-2	rating B
CO2e emissions reduction from natural gas savings	**76.3**	metric tons CO_2e/yr		Uses IPCC GWPs, 23 (CH_4), 210 (N_2O)
GHG reduction/increase associated with parasitic loads				
Total baseline system parasitic electrical loads	23.3	kW	Baseline monitoring data.	
Total installed system (SUT) parasitic electrical loads	36.67	kW	Extended test monitoring data.	
Installed system (SUT) electric intensity savings	-13.37	kW	Calculation.	
Annual electricity savings (increase)	(117,121.20)	kWh/yr	Calculation.	
Local utility electric generation CO2e emission factor	0.8291	lbs CO_2/kWh	eGRID 2012 v1.0 South Carolina State annual CO2 equivalent total output emission rate (lb/MWh). Data are current 2009.	

Item	Value	Units	Source	Notes
2012 annualized emissions reduction (increase)	**-44.14**	metric tons CO_2e/yr	Calculation.	Note: Assumes that electric chiller power consumption is the same for baseline and SUT
Net GHG emissions reduction.				
Net system GHG reduction compared to baseline.	**32.1**	metric tons CO2e/yr	Calculation.	

6.2.5 Availability and Reliability

It was not possible to quantitatively assess the availability and reliability of the installed system because the system did not operate as intended at any time during the demonstration. A summary of operations is presented in section 4.9. Implementation issues are discussed in the project narrative presented in section 4.0 above and are summarized in section 8.0 below. The 99% goals for availability and reliability were not demonstrated.

For the most part, the absorption chiller operated successfully throughout the demonstration whenever its operation was supported by the necessary sub-components of the system (the steam/solar loop, the cooling tower loop and the chilled water loop). Initially, there was a minor vacuum leak on the chiller that reduced performance, but did not result in an outage. The vacuum leak was associated with a removable water column that was bolted on to the chiller to allow it to fit through the mechanical room door at Building 590 for installation. This configuration was particular to the PI installation. In most installations, the water column is welded in place. The leaks were promptly repaired by PowerPartners following installation. There was a chiller outage in April 2012 caused by the chiller controls failure to reload site specific set points following a power outage. This issue was promptly corrected by PowerPartners who reprogrammed the system to reload the correct default values following an outage. These were the only operability issues associated with the chiller.

The solar system was continuously operable over only an approximate five month period (May 16-October 7, 2012) out of the 20 months of monitoring since the initial system commissioning (October 2011 through June 2013). The solar panels themselves performed as expected; however, the balance of the solar loop suffered problems with piping leaks, over-pressurization, expansion tank capacity, air infiltration, and faulty pressure relief valves. In addition, Vanir Energy failed to respond as promptly as would be expected to correct issues as they arose.

6.2.6 Economic Performance

The solar chiller system installed at PI was not cost effective. Net energy consumption costs for the test system were higher than baseline. There was a small, overall net savings associated with the test system resulting from lower maintenance costs of the adsorption chiller compared to the absorption chiller. However, the savings was not large enough for the system to realize a payback over its lifetime. Details of the economic analysis are presented in section 7.0.

6.2.7 Operability/Ease of Use

According to the demonstration plan, ease of use was to be assessed based on responses to a brief questionnaire from PIFMD management and maintenance personnel. Southern received no responses to the questionnaire. However, Southern was on site at every stage of the installation and operation of the

system and had frequent interactions with PIFMD management and maintenance staff through face to face communication, and telephone and email contact. These interactions were documented via trip reports, responses from PIFMD to weekly status updates and implementation issues, and monthly status reports. Thus, Southern feels that it is in a good position to offer a fair assessment of the operability and ease of use of the system.

The adsorption chiller operates automatically and the controls, though initially unfamiliar to PIFMD, are straightforward and accessible via the touch screen control panel. Southern attended training provided by PowerPartners to PIFMD management and staff during initial commissioning in September 2011. The training was complete and well-presented and included both theoretical and operational information. A classroom training session was followed by hands on field training. Full documentation of chiller operation and maintenance was provided.

As of the end of the demonstration period, Vanir Energy had yet to provide training on the balance of the system operation and maintenance and had not provided as-built drawings or documentation on system component specifications, controls, and the operation and maintenance schedule and procedures. However, Vanir reports that they have since addressed the need for training with PIFMD and no further training was requested. PIFMD did gain considerable knowledge of and practice with the system over the course of the demonstration through interactions with Vanir Energy, PowerPartners, and Southern - and through providing hands on assistance with system troubleshooting, modification and repair on many occasions. Vanir reports that, at the time of this writing, they have completed compiling a full documentation package and will make this available to PIFMD.

Southern's assessment is that, with proper documentation, training and operating experience, the system will be successfully operated and maintained by PIFMD maintenance staff. However, as the system is fairly complex and somewhat unfamiliar to PIFMD maintenance staff, ongoing support may be necessary. While the system, as designed, should be able to operate automatically and unattended, there are nuances of the system configuration that require a full understanding of the system function, as implemented, in order to effectively troubleshoot problems and minimize downtime.

6.3 Performance Results for Major System Sub-Components

The following material is presented to supplement the evaluation of demonstration plan performance objectives by providing a performance assessment for each of the major system sub-components demonstrated: the adsorption chiller and the solar array.

6.3.1 Adsorption Chiller

One of the key issues encountered during the demonstration was that the adsorption chiller was not demonstrated to produce the 80 RT rated output under the conditions achieved at Building 590. This issue is obviously a concern for the success of the demonstration, as well as the acceptability of the system to Parris Island whose primary concern is cooling the building.

Although the performance at rated chiller output was not demonstrated; when the system was operational, indoor temperatures at Building 590 did remain at or near the 78 F set point. Following repair and re-commissioning of the solar field in July 2013, Parris Island accepted formal transfer of the equipment without noting any deficiency.

It is possible that, due to reduced adsorption chiller output, the electric chiller may have taken on more of the building load (compared to baseline). Baseline electric chiller power consumption averaged 13.5 kW (corresponding to 12.3 RT at 1.1 kW/RT) during baseline measurements in Nov 2010 compared to an average of 0.2 RT output during Oct 2011. Average high temperatures in Nov 2010 were 70 °F. Average high temperatures were 75 °F in October 2011. Indoor temps were maintained at set point during both periods. Unfortunately, this is the only comparable period of electric chiller operation during the

demonstration. Based on this very limited comparison, it does not appear that the electric chiller load increased over the baseline system.

There are a number of possible reasons why the performance of the adsorption chiller as integrated at Building 590 was below expectation. These include:

- cooling tower flows were significantly lower than specification,
- the tower loop heat exchanger was fouled during much of the demonstration,
- chilled water flows were somewhat lower than specification,
- hot water temperatures were lower than specification.

According to PowerPartners, the resulting chiller output was within the acceptable range given these site conditions. Neither PowerPartners nor Southern were able to detect any problem with the chiller itself that might result in reduced output at any time during the demonstration. Unfortunately, the range of FAT test conditions did not span actual site conditions, so it is not possible to quantitatively verify that the field performance of the chiller was within the expected range at site conditions.

Due to system outages and unrepresentative site conditions, Southern was able to identify only seven periods during the demonstration where chiller performance could be fairly assessed. These periods span 3-5 days each. For each of these periods, Southern tabulated key chiller input conditions (temperatures and flows) and heat input/output to/from the chiller in each thermal loop. Southern also tabulated the system status, building status, and an assessment of the reasons chiller performance was below expectation. Three operational scenarios (or Cases) are represented by the seven periods. Case A (one period) represents chiller operation with the original cooling tower, and a new, clean, heat exchanger. Case B (four periods) represents operation with the fouled tower heat exchanger and inadequate heat removal reducing chiller performance. Case C (two periods) represents operation once the tower heat exchanger had been cleaned, larger tower loop pumps installed, and a larger steam valve that enabled increasing the hot water supply temperature. PowerPartners reviewed this data summary and confirmed that the results are representative and reasonable. The full tabulation is provided in Appendix H. Time series plots for each period showing an energy summary and building conditions summary are provided in Appendix I.

Table 5 summarizes chiller output for each case with an assessment of the reason for lower than expected output.

Table 5. Absorption Chiller Performance Summary

Case	Start Date	End Date	Chiller Output (Avg. RT)	System Status	Building Status	Performance Assessment
Submittal	na	na	80.0	Submittal Specification	Na	na
FAT (CT109)	7/26/10	7/26/10	76.0	Factory Acceptance Test Run CT109 (21 minute cycle)	Na	Southern deemed performance acceptable based on this test run.

Case	Start Date	End Date	Chiller Output (Avg. RT)	System Status	Building Status	Performance Assessment
Case A	10/21/11	10/26/11	35.7	Solar field operating. Chiller on 11 minute cycle. Original cooling tower.	Dining temperature 75, kitchen temperature 75-90, daytime highs near 90.	Chiller output lower than expected due to low (155 F) hot water supply temperature and low condenser and chilled water flow.
Case B1	3/29/12	4/6/12	36.1	Chiller operating on steam only (11 minute cycle). Solar field out of service.	Indoor temperatures at or below set point (78F), daytime highs near 90.	Chiller output lower than expected due to low (150 F) hot water supply temperature and low condenser and chilled water flow.
Case B2	4/9/12	4/12/12	42.2	Chiller operating on steam only (11 minute cycle). Solar field out of service.	Indoor temperatures at or below set point (78F), daytime highs near 90.	Chiller output lower than expected due to low (150 F) hot water supply temperature and low condenser and chilled water flow.
Case B3	5/13/12	5/16/12	45.3	Chiller operating on steam only (7 minute cycle).	Indoor temperatures at or below set point (78F), daytime highs near 90.	Chiller performance below expectation due to inadequate heat removal (condenser water flow lower than specification and fouled heat exchanger)

Case	Start Date	End Date	Chiller Output (Avg. RT)	System Status	Building Status	Performance Assessment
Case B4	5/17/12	5/22/12	46.0	Solar field operating. Chiller on 7 minute cycle.	Indoor temperatures at or below set point (78F), daytime highs near 90.	Chiller performance below expectation due to inadequate heat removal (condenser water flow lower than specification and fouled heat exchanger)
Case C1	6/15/12	6/18/12	51.2	Chiller operating on steam only (7 minute cycle). Solar field out of service.	Indoor temperatures at or below set point (78F), daytime highs in the 90's.	Chiller performance improved due to higher hot water supply temperature and better heat removal (condenser heat exchanger cleaned and flow increased), but flow still below specification.
Case C2	6/22/12	6/26/12	52.8	Chiller operating on steam only (7 minute cycle). Solar field out of service.	Indoor temperatures at or below set point (78F), daytime highs in the 90's.	Chiller performance improved due to higher hot water supply temperature and better heat removal (condenser heat exchanger cleaned and flow increased), but flow still below specification.

Though monitoring ceased at the end of June, 2013, Southern's understanding is that, after the solar field was put back into operation in July 2013, the system continued to operate. Though further options to improve chiller output are available, such as adjusting the cycle time or increasing the buffer tank temperature, Southern is not aware if such efforts are planned.

6.3.2 Solar Array

Though the solar array was under-sized (see section 4.5), the measured thermal output from the array almost exactly matched Ritter specifications. The only extended period of solar array operation was between May 16, 2012 and October 7, 2012. During the full months of June through September, Southern metered a total of 364.6 MMBtu solar thermal energy delivered to the buffer tank. For the same period, using ambient solar radiation and temperature data collected by Southern, Ritter calculated (based on panel specifications), that 365.2 MMBtu solar thermal output would be expected. These figures agree to within 0.2%. On this basis, the projected annualized solar thermal output for all of 2012 would have been 834.8 MMBtu. Based on a 20 year average of NASA weather data for Parris Island, forecasted solar array output would be 914.9 MMBtu/yr, on average. This value was used as the basis for steam reduction and GHG emission reduction calculations presented in section 6.2 and for the economic results presented in section 7.0.

In addition, to the solar array output figures presented above several other estimates were available that are consistent with and support the results presented. All available solar array output figures are presented in Table 6.

Table 6. Solar Array Thermal Output

Item	Value	Units	Source	Notes
Measured solar energy delivered to the buffer tank June-Sept. 2012	364.6	MMBtu	Monitoring data.	Measured value is 99.8% of calculated value.
Calculated solar energy delivered to the buffer tank June-Sept. 2012	365.2	MMBtu	Ritter calculation based on solar radiation and ambient temperature data collected at PI for all of 2012.	
Average daily solar input to buffer tank	3.0	MMBtu	May-Sept. 2012 monitoring data.	
Annualized solar input to buffer tank	1095.0	MMBtu/yr	Estimate of annualized solar input based on average daily input captured in monitoring data.	Biased high because based on data collected only in Summer months.
Annualized solar input to buffer tank	1065.4	MMBtu/yr	Valentin energie software estimate provided as part of system commissioning package.	
Annualized solar input to buffer tank	1080.7	MMBtu/yr	Vanir energy model of monthly solar energy availability (11/9/2012).	
Annualized solar input to buffer tank	834.8	MMBtu/yr	Ritter calculation based on solar radiation and ambient temperature data collected at PI for all of 2012.	

Item	Value	Units	Source	Notes
Annualized solar input to buffer tank	914.9	MMBtu/yr	Ritter calculation based on 20 year average of weather data for Beaufort, SC.	Value used as in this report basis for projected energy savings and economics calculations.

Issues encountered with the solar array included:

- The installed solar field was under-sized. The project specification was for the solar array to be capable of producing 60 RT of peak chilling capacity at a COP of 0.6. The installed array was capable of producing peak chilling of only about 30 RT.
- Failure of the supply header piping joints integral to the panels. The failure was caused by over-pressurization during stagnation events when manual isolation valves had been inadvertently closed, preventing the expansion tanks from relieving excess pressure. The piping was abandoned in place and replaced with exterior-mounted piping.
- Failure of copper piping solder joints. The failure was caused by overheating during stagnation events and possibly use of incorrect solder for the application during installation.

While the system was designed to allow for stagnation, it was not anticipated that stagnation events would be a frequent occurrence since the chiller would typically utilize all of the available solar thermal output. The system currently has no provision for dumping or utilizing excess heat to prevent stagnation.

6.4 Data Quality

The performance of the sensors and data acquisition equipment used to monitor and record the performance of the solar chiller system at Parris Island was adequate to provide valid data for assessment of the demonstration's performance objectives.

All instruments were calibrated by the manufacturer or by Southern prior to installation. During installation, sensor function checks were completed per manufacturer instructions and source to data checks were completed for all measurements.

All data were reviewed on a weekly basis by examining time series plots of all raw and calculated data values and making comparisons with expected values and previous data collected. Any anomalies in the data were investigated and all issues were documented using comments embedded in the data analysis spreadsheet. Southern issued weekly system status updates to project participants (PIFMD, Vanir and PowerPartners) noting any issues observed and requesting information to assign a cause to each issue.

Southern verified flow meter readings for each loop via cross checks with a portable ultrasonic flow meter (Dynasonics TFX Ultra) during installation and approximately semi-annually thereafter. Power meter readings were cross checked with a hand held Fluke true-rms clamp ammeter. The Fluke meter was also used to quantify constant power loads via periodic spot checks.

The only significant data quality issues during the extended testing were related to (1) temperature measurements in heat flow determinations, (2) failure of the solar flow meter and hot water flow meter and (3) determination of hot water input to the chiller. These issues and their resolution are described in the follow sub-sections. Baseline data capture issues have been addressed in section 5.3 above.

6.4.1 Heat Flow Determinations

In heat flow measurements, small differences in temperature can result in large difference in heat flow. Thus, the stability and calibration of the temperature sensors is critical. Temperature sensors were Class A RTDs with integrated 4-20mA analog transmitters for data acquisition. Southern developed calibration

curves for each sensor using cold (40° F), hot (180 °F) and room temperature (70 °F) baths. The bath temperatures were verified with a laboratory reference thermometer. Calibration coefficients were applied to raw data within the analytical spreadsheet using named ranges for traceability. While sensor calibrations are important, sensor placement can significantly affect readings. The sensors were placed as carefully as possible in representative locations and using immersion thermowells and heat transfer paste. However, in some cases there were baseline shifts in the heat flow data indicating that the sensor pairs were not precisely matched. This is not unusual in Southern's experience. Southern was able to identify and quantify these baseline shifts during periods when the system was not operating, i.e., when the temperatures should be equal and the heat flow zero. In each case, Southern was able to correct the temperature data by adjusting the calibration offset. All adjustments were tracked in the data analysis spreadsheet.

An unusual number of temperature sensors failed during the demonstration. In two cases, the transmitters were damaged by water intrusion. In other cases, the cause was not apparent, but the transmitter appears to have failed. Southern contacted the transmitter manufacturer (Omega engineering), but they were not aware of any issues with the transmitters. In each case, the sensors were replaced at the earliest opportunity. However, in some cases, surrogate data were used to fill data gaps. Surrogate data were obtained from alternate sensors located in the same supply or return portion of the heat flow loop, but at different locations. Baseline adjustments as described above were employed to correct the heat flow to zero during periods of downtime. The only significant period where this occurred was between 5/24/12 16:20 to 8/7/12 16:30 when TT5306 data were used in place of TT5301 for the chilled water return temperature. TT5306 was located approximately 20 feet downstream of TT5301 (with no intervening equipment). TT5301 was located near the chiller exit. An attempt was made to replace TT5301 on 7/2/12; however the replacement sensor failed shortly after installation.

6.4.2 Flow Meter Failures

The hot water flow meter (FV5501) stopped reading consistently on 8/8/12, possibly due to air introduced into the piping when the cooling tower strainer was cleaned on that day. The meter was not re-commissioned when the system was re-commissioned in June 2013 because the system was operating and the meter could not be safely adjusted due to high temperature. An ultra-sonic cross check confirmed that the hot water flow was 300 gpm, where it had steadily remained throughout the duration of the project.

The solar flow meter failed on 7/2/12. The unit was removed during Southern's 8/8/12 site visit and sent to the manufacturer for diagnostics and warranty repair. A circuit board had failed in the meter. To fill in the missing data, data from the power meter for the solar loops was used as a surrogate. When the solar pumps were operating, the flow was consistent at 40 gpm. Thus, a value of 40 gpm was substituted whenever the power meter indicated that the pumps were operating. Southern found that this correction tended to over-estimate the total solar loop flow compared to the direct flow meter readings. The over-estimate was due to the fact that the power meter readings failed to capture off periods in the normal pump cycling at the 10-minute data collection frequency. Southern corrected the surrogate data by identifying a span of three clear, sunny days that occurred within two weeks before and after the meter failed and comparing total solar loop flow over each of these periods. The difference was approximately 15%, and the correction was applied to all data following the meter failure. The repaired meter was re-installed on 6/10/13.

6.4.3 Heat Input to Chiller

Because of chiller cycling, the return temperature from the chiller (TT5505) on the hot water loop fluctuates significantly during normal operation. With the 10 minute data collection frequency, these temperature fluctuations were not fully captured. This situation made it difficult to accurately determine the heat input to the chiller when operated on combined solar/steam heat input. However, when the chiller was operated on steam only, the heat input could be accurately determined using a temperature sensor

pair located immediately upstream and downstream of the steam heat exchanger (TT5506 and TT5502). This determination provided a check on the combined solar/steam heat input measurement using TT5502 and TT5505. Southern found that, in most cases, the combined solar/steam heat input was reasonably accurately determined when integrated over time, although the moment to moment heat input determination was highly variable. Nonetheless, Southern feels that energy balance and COP determinations are best represented in the data when the chiller was operating on steam only.

7.0 COST ASSESSMENT

The solar chiller system installed at Building 590 was not cost effective. The reasons for this include:

- The installed capacity of the solar array was much smaller than the original design capacity so that the associated steam energy reduction and natural gas savings were not sufficient to offset the capital and operating costs over time.
- The electric demand of the test system was higher than the baseline system. The increase in electric cost was higher than the natural gas cost savings.
- Maintenance costs for the adsorption chiller are considerably lower than that for the baseline absorption chiller, resulting in a small net savings for the test system at Building 590 compared to baseline. However, this savings is not large enough to provide a payback within the lifetime of the system.

Based on Southern's experience with this demonstration and recent findings from other researchers [8,9], a solar thermal chiller system based on evacuated tube collectors is unlikely to be cost effective under most implementation scenarios, especially as compared to alternative solutions (see section 7.3.3).

The following sections provide details supporting these conclusions.

7.1 Cost Model

The cost model for the solar chiller technology accounts for initial capital costs (including engineering and installation) and routine operation and maintenance costs. The demonstration plan baseline economic assumption is that the energy savings are intended to recover the capital and O&M costs of the entire retrofit installation.

7.1.1 Capital Costs

The Vanir invoiced costs for the system totaled $772,672 including engineering, equipment and installation. These costs may be taken as representative of a typical 'turn-key' installation consistent with the bid package specification. In addition, there were costs totaling $41,000 to replace the aging cooling tower and install control sensors, (including wiring and programming) that were covered by additional project funds or by PIFMD. Thus, the initial installed cost for the complete system totaled $813,672. A breakdown of these initial costs is given in Table 7.

Table 7. Capital Costs

Item	Cost	Notes
Heat Exchangers	$ 11,082	Vanir invoice
Pumps	$ 19,257	Vanir invoice
Valves	$ 23,278	Vanir invoice
Mechanical Room	$ 8,370	Vanir invoice
Chiller	$ 191,000	Vanir invoice
Piping	$ 49,200	Vanir invoice
Solar Panels	$ 171,907	Vanir invoice
Racking	$ 81,737	Vanir invoice
Storage Tank	$ 32,900	Vanir invoice

Item	Cost	Notes
Shipping	$ 9,300	Vanir invoice
Travel	$ 10,120	Vanir invoice
Subcontractors	$ 103,395	Vanir invoice
Indirect Charge	$ 35,577	Vanir invoice
Fee	$ 25,548	Vanir invoice
Subtotal Vanir invoice	$ 772,672	sub-total Vanir invoice
Additional Costs		
Cooling tower	$ 26,000	paid by ESTCP
Controls wiring and programming	$ 15,000	paid by PI (estimate)
Subtotal additional costs	$ 41,000	sub-total additional
Total installed system cost	$ 813,672	Total

In addition to the costs presented in Table 7 above, a number of cost over-runs were encountered during commissioning of the solar chiller system at Building 590. These were primarily related to repairs to the solar field due to over-pressure and over-temperature conditions that were encountered (see section 4.5). There were also additional costs for larger cooling tower loop pumps and a larger steam valve that were installed in an effort to realize the rated output of the chiller (see section 4.6). Vanir's actual expenditures totaled $814,052, or $41,380 over the fixed bid price, amounting to a 5.4% cost over-run exclusive of fee. Parris Island bore the cost of installing the larger cooling tower loop pumps, motor controls, and the larger steam valve. Southern does not consider the over-run costs as representative because they reflect deficiencies in the initial system design that should be avoided in future implementations.

7.1.2 Operation and Maintenance Costs

Routine operation and maintenance costs could not be tracked as the system did not achieve routine operation during the demonstration. Table 8 gives incremental O&M cost estimates provided by Vanir Energy and PowerPartners for test system components over the baseline absorption chiller. Costs are primarily for labor for inspections and adjustments as there are few required replacement parts and no consumables. A labor rate of $65/hour was applied.

Table 8. Incremental Operation and Maintenance Costs

Item	Cost	Notes
Adsorption chiller	$3,000	PowerPartners estimate
Solar Array	$4,160	Vanir Estimate
Solar DHW	$520	Vanir Estimate
Controls	$1,040	Vanir Estimate
Total	**$8,720**	Sum
Absorption chiller	$15,000	PowerPartners figure

Item	Cost	Notes
Incremental O&M cost over baseline	**($6,280)**	Cost savings

Because of the high estimated annual O&M cost for the absorption chiller, the O&M costs for the test system are lower than for the baseline system.

Non-annual maintenance or replacement costs for the test system are minimal. Vanir recommends that the solar controller be replaced after 5 years at a cost of $5,000.

7.1.3 Service Life

Southern determined the service life for the test system at 20 years based on published ASHRAE median service life data for major HVAC system components [7], adjusted downward for the coastal environment at Parris Island. Vanir concurs with Southern's estimate.

7.2 Cost Drivers

The solar chiller technology will not be cost effective unless there is sufficient solar radiation to power the system and offset sufficient electric or other fuel consumption to provide a payback in a reasonable period. The energy consumption of the entire system including pumps, heaters and controls must be carefully evaluated to ensure a net savings is realized. Compared to Parris Island, a higher radiation area, such as the Southwest USA where annual solar radiation is approximately twice that in South Carolina would yield a higher return on investment.

The candidate building must have sufficient solar exposure and available rooftop or adjacent area for the solar collector array. Solar array racking costs were increased at PI over other locations due to the need to withstand hurricane force wind loads. In areas with similar solar radiation to Parris Island, an array approximately twice the size of that employed at Parris Island (4500 square feet) could be effectively utilized for an equal tonnage cooling system. It is generally uneconomical to size the solar array larger than can be effectively utilized to offset solar induced cooling loads.

The candidate building must have sufficient space available to house the chiller, storage tank and balance of plant equipment. The EcoMax adsorption chiller may be installed outdoors.

Solar thermal chiller systems should be carefully evaluated against alternative solar cooling options such as solar PV/vapor compression chillers, which in many instances, may be more cost effective.

7.3 Cost Analysis

Net annual savings and system payback are examined from several perspectives in the following sub-sections. First, economic results are presented for the Parris Island installation with the demonstration plan baseline assumption that capital costs were to be entirely recovered from energy savings. Next, an assessment is presented based on the differential cost compared to a replacement in kind with new equipment of the same type. Finally, several alternate system performance scenarios are examined to determine whether probable improvements in system performance will result in acceptable economics.

7.3.1 Parris Island Installation

There was no net energy cost savings for the test system over baseline as the natural gas cost savings due to the steam energy reduction were overshadowed by increased electricity usage of the test system over baseline. Estimated annual O&M costs for the test system are lower than the baseline system due to the

lower maintenance costs for the adsorption chiller over the baseline absorption chiller. These two factors result in a small net cost savings of the test system over baseline of about $2,900 per year. This amount is clearly insufficient to recover the capital cost of the installed system over a 20-year service life.

The data and calculations supporting this conclusion are presented in Table 9.

Table 9. Cost Analysis

LCCA Element	Value	Units	Data Sources and Notes
Steam savings	703.8	MMBtu/yr	Net savings over baseline. See section 6.2.3.
Steam price	$6.42	MMBtu	Parris Island FY12 activity rate.
Steam cost savings	$4,518	$/yr	Calculated. Neglects distribution efficiency.
Natural gas savings	1,409	MMBtu/yr	NG savings equivalent to steam savings at delivered efficiency. See section 6.2.4.
Natural gas price	$4.22	$/MMBtu	EIA 2012 NG price, SC, industrial.
Natural gas cost savings	$5,946	$/yr	Calculated. Including distribution efficiency.
Electricity savings/(increase)	(117,121)	kWh/yr	Difference in parasitic load for test vs. baseline system. See section 6.2.4.
Electricity price	$79.56	$/MWh	Parris Island FY12 activity rate.
Electricity cost savings/(increase)	($9,318)	$/yr	Calculated.
Net energy cost savings/(increase)	($3,372)	$/yr	Calculated.
Capital Component: FP250, Investment Cost	$813,672	$	Vanir Energy invoicing for complete system. Does not include repairs costs, cost of cooling tower, controls programming and other costs covered by PI.
Capital Component: FP250, Investment Cost, Residual Value	$0	%	Straight line proration over study period (same as system lifetime) per FEMP 135 manual. Salvage value presumed equivalent to disposal cost.
Annual OM&R compared to baseline	($6,280)	$/yr	Annual average parts and labor compared to baseline. Based on Vanir and PowerPartners estimates.
Net incremental savings compared to baseline.	$2,908	$/yr	Calculated.

Early estimates projecting a seven year payback for the system did not anticipate that the electric usage for the test system would be significantly higher than the baseline system and assumed a much higher solar contribution than was realized given the reduction in solar array capacity. In addition, at the outset of the project, the Parris Island steam cost was very high ($41.85/MMBtu based on FY2009 activity rate), which led to under-estimates of the system payback period. This value includes the high cost of operating and maintaining Parris Island's aging steam plant and distribution system.

The steam cost was later revised significantly downward to $6.42/MMBtu (FY2012 activity rate) in response to concern from private party rate payers. This value is representative of the cost of the natural gas used to produce central plant steam, excluding distribution losses. The energy savings results given in Table 9 above are based on the cost of natural gas to produce a given quantity (MMBtu) of steam *as delivered to the chiller* accounting for boiler efficiency, distribution losses, and heat exchanger efficiency. As Parris Island does not currently account for the operating and maintenance cost for steam generating and distribution, these costs are neglected. Steam plant and distribution system O&M costs are highly site specific and representative information on such costs is not readily available.

Part of the reason that there was no net revenue for the Parris Island installation is that the solar field capacity was reduced by about 50% from the original project specification, so the steam energy reduction and associated natural gas savings were substantially lower than they might have been. Another contributing factor was that the demonstrated efficiency (COP) of the adsorption chiller was lower than the assumed efficiency for the baseline absorption chiller.

Because there was insufficient net savings for the test system compared to baseline to yield a payback period within the system lifetime, a more detailed life cycle cost analysis for the Parris Island solar chiller installation was not warranted under the demonstration plan assumption that the entire retrofit cost was to be recovered through energy savings. The following sections consider an alternative approach to the cost assessment and examine system economics under selected scenarios for optimizing system performance.

7.3.2 Differential Cost Analysis

The baseline scenario for the economic assessment might reasonably have been to consider the differential cost between the solar adsorption chiller system and replacement in kind with a steam driven absorption chiller. This approach is consistent with industry practice and, as has been stated above, the existing absorption chiller and cooling tower at Building 590 were nearing the end of their useful life, so it is reasonable to assume that this equipment might have been replaced in any case.

According to data from PowerPartners, the cost of an absorption chiller of similar capacity to the old chiller at Building 590 (90 RT) would be about $130,000. The 80 RT rated adsorption chiller cost to the project was $191,000, so the differential cost is $61,000. Since the cooling tower would also have been replaced in the baseline case, the differential cost of the cooling tower is zero.

It is more difficult to estimate the differential cost of balance of plant equipment such as pumps, piping, and controls. However, it is reasonable to assume that there would be significant costs to update the old system balance of plant components with a replacement absorption chiller installation.

Table 10 presents an estimate of installed capital costs in a differential cost scenario. A differential cost factor is used to apportion the cost for each capital cost item presented in Table 9 above. A differential cost factor of 30% of the total retrofit cost considered as a base. The 30% factor is consistent with the differential cost for the chiller as discussed above ($61k/$191k = approximately 30%) and is also consistent with Vanir experience with other installations. The base factor is adjusted upward for items where the line item costs are more associated with the solar part of the system. A differential cost factor of one (1.0) indicates that the capital cost item is associated with the solar portion of the system only.

Based on this analysis, the differential capital cost of the solar thermal chiller system is about $460,000. This is a very approximate figure, but the methodology may be useful to some in assessing site specific cost-effectiveness for solar thermal chiller systems.

Table 10. Differential Cost Analysis

Item	PI System Cost	Differential Cost Factor (DCF)	Differential Cost	Notes on Differential Cost
Heat Exchangers	$ 11,082	0.80	$ 8,866	all but the steam HX are specific to the solar chiller
Pumps	$ 19,257	0.60	$ 11,554	additional tower pump
Valves	$ 23,278	0.80	$ 18,622	largely due to solar chiller installation
Mechanical Room	$ 8,370	1.00	$ 8,370	changes to mechanical room specific to accommodating larger frame size of adsorption chiller
Chiller	$ 191,000	na	$ 61,000	from PowerPartners data
Piping	$ 49,200	0.30	$ 14,760	chiller
Solar Panels	$ 171,907	1.00	$ 171,907	solar only
Racking	$ 81,737	1.00	$ 81,737	solar only
Storage Tank	$ 32,900	1.00	$ 32,900	solar only
Shipping	$ 9,300	0.50	$ 2,325	less 50% for solar install
Travel	$ 10,120	0.50	$ 2,530	less 50% for solar install
Subcontractors	$ 103,395	0.50	$ 25,849	less 50% for solar install
Indirect Charge	$ 35,577	0.50	$ 8,894	less 50% for solar install
Fee	$ 25,548	0.50	$ 6,387	less 50% for solar install
Subtotal Vanir invoice	**$ 772,672**	na	**$ 455,702**	na
Cooling tower	$ 26,000	-	-	zero
Controls wiring and programming	$ 15,000	0.30	$ 4,500	base
Subtotal additional costs	$ 41,000	na	$ 4,500	na
Total installed system cost	**$ 813,672**	na	**$ 460,202**	na
Cost less solar portion	$ 518,758	32%	$ 165,287	Non-solar differential cost for BoP components comes to about 30% of total system cost (DCF = 1).

7.3.3 Alternative Performance Scenarios

Because the performance of the Parris Island system was non-optimal, it is useful to consider alternative scenarios where performance may be improved. Specifically, if any of the following had been the case for Parris Island installation, system economics would have been improved.

- Replacing the original 7.5 HP tower loop pumps with the 15 HP had been unnecessary, reducing the net parasitic load from 13.4 kW to 2.1 kW.
- The chiller COP had been demonstrated at the acceptance test performance level (0.57)
- The full 60 RT chilling capacity of the solar field had been installed

Finally, the hypothetical case is considered where a similar system is located in the desert Southwest where there is approximately twice the annual solar irradiance as that at Parris Island.

Table 11 gives annual energy savings and net annual savings (including O&M savings) for each alternate scenario. The Table also shows the simple payback period for both total retrofit cost recovery and differential cost recovery baseline assumptions.

Under the best case scenario, simple payback would occur in year 14. This is the only case where payback occurs within the expected service life of the equipment.

Table 11. Economic Projections for Alternate Performance Scenarios

Scenario	Net Annual Energy Savings	Net Annual Savings (Incl O&M)	Simple Payback for Total Retrofit Cost Recovery (years)	Simple Payback for Differential Cost Recovery (years)
Demonstrated Parris Island Performance	($3,372)	$ 2,908	280	158
With original 7.5 HP tower loop pumps	$ 4,482	$ 10,762	76	43
At acceptance level absorption chiller COP (0.57) and 7.5 HP pumps	$ 5,315	$ 11,595	70	40
At acceptance level absorption chiller COP (0.57) and 7.5 HP pumps and full specified 60 RT solar field capacity	$ 12,108	$ 18,388	44	25
At acceptance level absorption chiller COP (0.57) and 7.5 HP pumps, full specified 60 RT solar field capacity and maximum solar irradiance (e.g., SW US)	$ 25,680	$31,960	25	14
Note: Capital cost for total retrofit cost recovery is $813,672. Capital cost for differential cost recovery is $460,000). Natural gas cost at $4.22/MMBtu per EIA 2012 for South Carolina.				

7.4 Cost Comparisons

Adsorption chillers are roughly twice as costly as absorption chillers on a ton for ton capacity basis. This is partly due to more limited market penetration of adsorption chillers and partly due to higher materials and manufacturing costs. For the demonstration, the cost of the existing absorption chiller was considered a sunk cost and did not figure into the demonstration cost analysis. However, for a new system, if hot water supply temperatures can be maintained high enough (above 180 F), an absorption chiller might be a more economical choice.

Conventional electric powered vapor compression chillers have still lower initial capital cost per refrigeration ton capacity than either adsorption or absorption chillers. With low current photovoltaic panel costs, a photovoltaic powered vapor compression system may often be a better economic option for a solar chilling system. A further economic advantage of solar electric chilling systems is that solar

thermal chiller systems require backup chilling capacity, usually in the form of a vapor compression chiller, as it is typically uneconomical to size a solar thermal array and storage to provide 100% of the required chilling capacity for a building. Another advantage of solar photovoltaic is that a grid-tied system can easily and cheaply take up any excess PV capacity.

8.0 IMPLEMENTATION ISSUES

There were a number of technical and management issues that negatively impacted the success of the demonstration. These issues are best understood within the context of the chronological project narrative presented in section 0 above. However, in general, the issues may be summarized as follows.

There were a large number of issues with the original system design. Examples include:

- The available roof area was insufficient to support the planned solar thermal capacity.
- The initial design for chiller operation on solar or steam energy alone was unworkable.
- The design failed to account for water transfer between the hot water and tower loops within the chiller (though this fact was documented in the chiller manual).
- The solar field piping design and construction did not make adequate provision for high temperatures during stagnation events.
- The initial piping design had inadequate provision for pressure relief and release of entrapped air.
- The initial control sequence was incomplete, which caused delays in system commissioning.
- The design failed to make adequate provisions to ensure that chiller supply flows and temperatures would meet the chiller submittal specifications.

Essentially, the original design was incomplete and inadequate and Southern failed to ensure that a full design review was completed, and the design fully documented and approved, prior to the start of construction.

It is important that the selected technology vendor buys in to the demonstration nature of the project and that this commitment is reflected explicitly in the scope of work and contract. In addition to supplying the necessary equipment, engineering expertise and installation services, the vendor must support achieving demonstration objectives by providing, for example, engineering analyses and economic data and being responsive to meeting the objectives of the demonstration. As an example, Vanir's delays in completing the DHW system installation prevented evaluation of DHW system performance.

While a large number of chiller test runs were completed at the factory, the factory acceptance test conditions matrix did not anticipate the range of possible supply flow and temperatures to the chiller that might be encountered in the field, or span the range of chiller cycle timing that might be employed to optimize performance under field conditions. This made it impossible to fully evaluate whether the field chiller performance was within the expected range and complicated efforts to optimize chiller performance in the field. This shortcoming was partly a consequence of Southern's failure to ensure that the system design was complete prior to implementation.

There were also issues with building HVAC systems maintenance that impacted Southern's ability to fully evaluate the performance of the test system. In particular, the electric chiller was not controlling properly throughout most of the 2012 cooling season (May through October) such that the absorption chiller performance was unrepresentative during much of this period. For example, since the two chillers are installed in series, if the electric chiller is running at full output without responding to demand, the output of the adsorption chiller will be suppressed. This period happens to correspond with the only lengthy continuous period of operation of the full solar chiller system. In addition, the solar chiller system was down for nearly six months (October 2013 through March 2013) due to the time required to clean the tower loop heat exchanger. The heat exchanger was fouled because the cooling tower water treatment system was removed when the new tower was installed and not replaced.

Regulatory barriers for solar chiller installations are low. The project must meet local building and fire codes. At Building 590, there were significant costs associated with meeting the required hurricane wind load for the rooftop panel installation.

The end-user (PIFMD) concern was keeping the building cool and potentially realizing a renewable energy benefit. Although the system was not demonstrated to perform to expectations, indoor temperatures were maintained at set point. PIFMD also benefited in that the new equipment (primarily the chiller and cooling tower) replaced existing equipment that was nearing the end of its useful life. Southern left in place equipment to monitor the solar field input to the system so that PIFMD may quantify the renewable energy benefit.

It is worth noting that the problems encountered during the Parris Island demonstration are not unique. In a 2012 report [10], the Quality Assurance in Solar Heating and Cooling Technology (QAiST) group of Intelligent Energy Europe surveyed 57 solar cooling installations in 10 EU countries. The survey was especially focused on durability, maintenance and cost issues. The report notes many of the same issues encountered during this demonstration including:

- building maintenance issues,
- insufficient flow rates,
- lack of solar field capacity,
- leakage resulting from stagnation events,
- lower than expected chiller capacity and COP,
- heat exchanger and pipe fouling,
- chemical treatment failures.

9.0 TECHNOLOGY TRANSFER

Throughout the demonstration, Southern engaged in publicity and outreach activities intended to inform the DoD energy community, as well as the broader renewable energy community about opportunities and applications for the solar chiller system.

Southern has made presentations on the demonstration at annual SERDP/ESTCP symposia each year since 2009 as well as at the 2012 Environment, Energy Security and Sustainability (E2S2) Symposium.

Southern had an abstract accepted for the 2013 E2S2 symposium, but the conference was cancelled due to federal budget sequestration. Southern also prepared and distributed project fact sheets through Southern's web site and as conference handouts.

Table 12 lists outreach activities and resulting news stories known to have resulted from outreach activities conducted as part of this demonstration.

Table 12. Technology Transfer

Date	Type	Venue/Distribution
2009	ESTCP Symposium	Poster presentation
2010	ESTCP Symposium	Poster presentation
2011	Press Release	http://www.vanirenergy.com/Projects/Paris.pdf
2011	ESTCP Symposium	Poster presentation
2011	Chiller Workshop	Parris Island MCRD
2012	Conference presentation	NDIA E2S2 Conference
2012	Fact Sheet	Parris Island command
2012	Press Release	http://archive.constantcontact.com/fs064/1103840564614/archive/1109613105305.html
2013	News Story	http://www.r718.com/news/view/4520
2013	Industry Report	"Powering up America", Cater Communications
2013	Press Release	DoD and Industry publications

10.0 REFERENCES

[1] CTS Inc., "PIMCRD Building 590 Air Handler Repair List", February 2011.

[2] PowerPartners, "Parris Island 8/7/12" presentation, August 2012.

[3] Southern Research, "Demonstration Plan: Demonstration of a Solar Thermal Combined Heating, Cooling and Hot Water System Utilizing an Adsorption Chiller for DoD Installations", July 2010.

[4] Richard Adamson, Southern Research, "Technical Note: Projecting Heating or Cooling Energy Usage or Savings", April 2010.

[5] Frederic A. Hooper, Jr. and Ronald D. Gillette, "How Efficient Is Your Steam Distribution System?", http://www.trapo.com/howeffic.htm.

[6] Gary Phetteplace, "Efficiency of Steam and Hot Water Heat Distribution Systems", US Army Corps

of Engineers Cold Regions Research & Engineering Laboratory, September 1995.

[7] ASHRAE Service Life Query Dataset, http://xp20.ashrae.org/publicdatabase/

[8] Dickinson et. al, " Cost and Performance Analysis of a Solar Thermal Cooling Project", Proceedings of the ASME 2010 4th International Conference on Energy Sustainability, May 17-22, 2010, ES2010-90248

[9] Ishaya, S., "Solar Cooling Methods and Applications", Presentation, Pragmatic Professional Engineers

[10] Pilar Navarro-Rivero and Björn Ehrismann, "Durability issues, maintenance and costs of solar cooling systems, Task Report 5.3.2. QAiST, Intelligent Energy Europe, May 2012.

APPENDICES

Appendix A: Points of Contact

Table 13. Points of Contact

Name	Organization	Phone/Email	Role in Project
Tim Hansen	Southern Research	919.282.1050 hansen@sri.org	Principal Investigator
Bill Chatterton	Southern Research	919.282.1050 chatterton@sri.org	Project Manager
Eric Ringler	Southern Research	919.282.1050 ringler@sri.org	Technical Lead
Don Haase	Vanir Energy	916.870.2677 don.haase@vanir.com	Project Manager
Mike Quinn	Central Carolina AC	336.362.3255 mquinn@ccair.com	Construction Manager
Richard Pierce	Parris Island MCRD	843.228.2126 richard.pierce@usmc.mil	Energy Manager
Ronnie Myers	Parris Island MCRD	843.228.2720 ronnie.myers@usmc.mil	Facilities Manager

Appendix B: Project Timeline

Table 14. Project Timeline

Date	Event
9/18/2009	Original contract effective date.
9/18/2009	Contract with Vanir Energy.
12/3/2009	Site selection memo submitted.
3/26/2010	SRI on site to mark sensor locations for baseline monitoring period and meet with Parris Island participants.
7/12/2010	Final approval of demonstration plan.
7/17/2010	Start of baseline monitoring data collection.
7/26/2010	Factory acceptance test of adsorption chiller completed.
12/15/2010	End of baseline monitoring data collection
1/6/2011	Construction kick-off meeting at Parris Island with SRI, Vanir and Parris Island personnel attending.
2/1/2011	SRI on site to meet with controls contractor and verify performance of existing system. Baseline instruments and data acquisition system removed. Power metering locations and amperage checked for extended monitoring.
2/22/2011	Material to mount solar panels arrives on site. Construction begins.
5/24/2011	Adsorption chiller installed.
5/25/2011	Piping mostly complete. SRI on site to locate and mark extended monitoring sensor locations for port installation.
6/6/2011	SRI on site to install sensors and data acquisition system.
6/20/2011	SRI on site to complete sensor installation.
7/1/2011	Start of extended monitoring data collection.
8/10/2011	SRI on site to observe initial commissioning activities and install and calibrate remaining sensors that could not be installed previously due to incomplete system installation.
9/27/2011	SRI on site to observe further commissioning, control programming and operator training. Several failed temperature sensors were replaced.
9/28/2011	Adsorption chiller first produces chilling from solar energy.
10/3/2012	SRI meeting with Vanir and CCAC to finalize control strategy.
11/10/2011	New cooling tower installed.
12/5/2011	SRI on site to observe 'final' commissioning activities and check sensors. Pressure equalization line installed between hot water and condenser loops.
1/24/2012	Meeting with Vanir, Ritter and CCAC to kick off design review.
1/30/2012	As built drawings for current configuration delivered to Southern by Vanir.
2/13/2012	Vanir delivers action plan to resolve operability issues.
2/23/2012	Vanir on site to assess system. System condition found as expected and plans were made to recondition the system as planned for in the 2/13 action plan.

Date	Event
3/20/2012	System reconditioning complete and Vanir on site with CCAC, Ritter, and PowerPartners to recommission system. The absorption chiller resumed operation on steam, but cracks were found in the solar array piping that will need repair before the solar loop is brought back on line.
3/22/2012	Chiller sealed, recommissioned and performing well. One-year warranty period begins.
5/9/2012	PowerPartners on site to reprogram the adsorption chiller to reload correct system settings after a power outage.
5/16/2012	SRI on site to repair and recalibrate flow meters and observe re-commissioning of solar loop.
7/2/2012	Solar flow meter failed. Surrogate data based on power consumption used (correction applied).
7/3/2012	Replacement sensors for the hot water return (TT5505) and chilled water output (TT5301) from the adsorption chiller were installed by Parris Island FMD. TT5301 failed again within a day. TT5505 failed again within two weeks.
8/10/2012	SRI on site to replace failed sensors. Solar loop flow meter removed for service. Found that the cooling tower heat exchanger was plugged. PowerPartners onsite to check chiller performance and conduct building HVAC survey.
9/12/2012	Tower HX was chemically cleaned. This was found to be ineffective.
12/1/2012	Tower HX disassembled. Severe mineral buildup was found.
1/10/2013	Work commenced to install a water treatment system on the cooling tower to prevent mineral buildup in the tower and heat exchanger.
1/29/2013	Chemical arrived at PI to clean tower HX.
3/8/2013	HX cleaning complete. Chemical treatment system installation complete. New, larger (2") steam valve installed and controls wiring complete.
4/26/2013	New, larger (575 gpm) pumps installed and wired. Pumps would not start with existing motor controls.
5/7/2013	Vanir on site to inspect expansion tanks.
5/28/2013	Vanir on site to restart system. Solar field leaking at solder joints, apparently due to overheating. Tower HX leaking. System not restarted. Southern on site to checkout monitoring system. Logger damaged by water in cabinet. Removed logger for repair.
6/10/2013	Southern on site to install repaired logger and check out sensors. Chiller restarted on steam only.
6/21/2013	Hot water supply temperature increased to 185 F. Chiller tonnage output increased from about 47 to 52 RT.
6/26/2013	Chiller cycle time reduced from 11 minutes to 4 minutes. Data logger ceased functioning. Relay stuck and power supply shorted.
7/1/2013	Monitoring formally discontinued.
7/15/2013	Vanir making solar field repairs.
7/17/2013	Solar field repairs complete. DHW controls complete.
7/18/2013	System resumes operation with solar energy input.

Appendix C: Control Sequence

CHILLER PLANT

Solar energy will be prioritized as follows:

Solar energy shall be used for cooling whenever sufficiently high solar hot water temperatures are available for efficient operation of the adsorption chiller

The adsorption chiller works more efficiently at higher chilled water temperatures and the electric chiller works more efficiently at lower chilled water temperatures, so the two chillers shall be operated in a cascade, from ADCH to Trane

Sequence Chillers:

Building Automation System (BAS) will enables chiller plant when the outdoor air temperature (A1-1F) is > 50 degs. (adjustable) and the building has cooling calls

Adsorption Chiller and pumps P-1, P-2, P-3 and P-6 are enabled.

Once the solar chiller is running for at least 30 minutes (adjustable) and if the return water temperature is > 55 degrees F (AI-6F/TT5302) for 30 minutes (adjustable) the air cooled chiller will start. The air cooled chiller will operate on its self-contained controls and maintain 45 degrees F supply. There will be minimum enable time of 30 minutes (adjustable). The air-cooled chiller will be disabled if the return water temperature is < 52 degrees F (AI-6F/TT5302) (adjustable) for 20 minutes.

Sequence Cooling Tower:

Whenever P-1 is enabled and proof of flow is established.(1D1-7F)The tower fan VFD will be enabled and control at a set point of 80 degs (AI-8F_TT5204) adjustable

Sequence Solar Chiller Hot Water:

3-way valve will be positioned and locked to use solar hot water from the storage tank

With proof of flow from P-6 (2DI-F2) the heat exchanger steam valve will maintain a set point of 160 degs. F (adjustable) as sensed from (1AI-4F/TT5502).

Freeze Protection:

When outdoor air temperature is < 35 Degs. F (AI-1F)

Pumps P-3 and P-2 will be enabled. Until the outdoor air temperature is 3 degs. F.> set point

Sequence Solar Domestic Hot Water:

Pump P-8 will be enabled and recirculate the DHW storage tank 24/7

Pump P-7 will be enabled, NC V-1 will be closed and NO V-2 opened, when the solar storage tank is above 170 degs. F (1AI-5F)(adjustable) and the DHW storage return temperature is < 140 degs. F (future) When the above statement is not true, NO Valve V-1 will be open, NC valve- 2 will be closed, Pump P-7 will be disabled and the existing Armstrong heater will be used.

Appendix D: Baseline Results Summary

Table 15. Summary of Baseline Monitoring Results

Item	Sensor Tag	Value	Units	Notes
Chilled water loop pump power consumption - kitchen area	PM5801	1.6	kW	constant load when operating
Chilled water loop pump power consumption - dining area	PM5301	2.5	kW	constant load when operating
Cooling tower loop power consumption	PM5201	4.6	kW	constant load when operating
Cooling tower fan power consumption	PM5202	9.6	kW	constant load when operating
Absorption chiller power consumption	PM5101	5.0	kW	constant load when operating
Total baseline electric power consumption	na	23.3	kW	constant load when operating
Conventional chiller power consumption	PM5802	15-30	kW	data available 11/9/10-12/15/10 (low load period)… approximately 1.1 kW/RT
Chilled water loop flow - kitchen area	FV5302	mm	gpm	Not measured, sensors not installed due to error.
Chilled water loop flow - dining area	FV5301	180	gpm	
Cooling tower loop flow	FV5202	240	gpm	
Cooling tower heat removal	Q_tower	150	RT	
Chilled water supply temperature, absorption chiller (dining area)	TT5302	mm	F	Not measured. TT5302 was mistakenly located on return piping.
Condenser water supply temperature	TT5202	100	F	average
DHW loop cold water supply temperature	TT5401	60-90	F	higher in warmer months
DHW loop hot water supply temperature	TT5403	135	F	held constant due by cold water mixing valve
Average daily DHW usage	FV5401	8095	gpd	+/- 333 gpd (95% CI), range 6-10k gpd

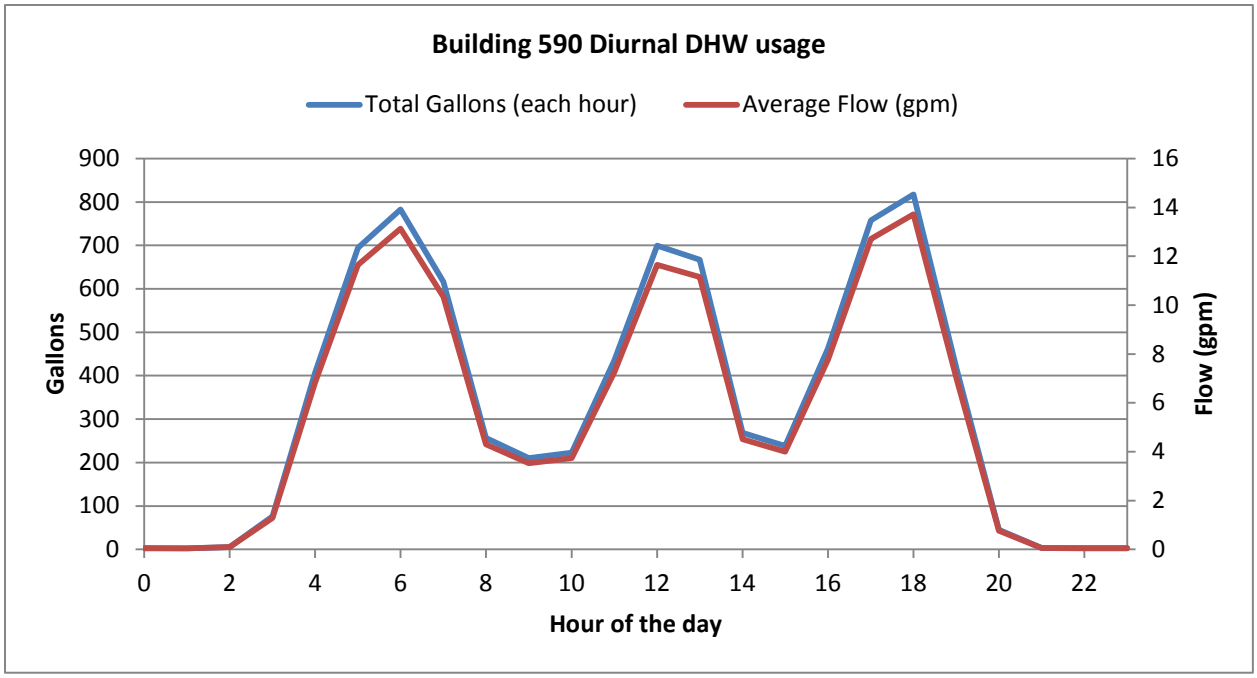

Figure 4. Diurnal DHW Usage

Appendix E: Test System Parasitic Loads

Table 16. Test System Parasitic Loads

Item	Sensor Tag	Value	Units	Notes
Chiller water loop pump	PM5301	3.6	kW	Constant load
Tower loop pumps	na	22.6	kW	Constant load. 15 HP rating on new pumps
Hot water loop pump	na	3.5	kW	Constant load. Spot check.
Solar loop pumps	PM5601/2	0.55	kW	Variable load. 2012 average (May-Sep).
Tower fan	PM5202	5.75	kW	Variable load, Average 3/20-11/1/2012 chiller operating period.
Chiller controls	PM5101	0.45	kW	Constant load. Monitored.
Chiller auxiliary (air compressor/dryer)	PM5601/2	0.22	kW	Variable load, average when solar field not operating.
Tank heaters	PM5601/2	0.0	kW	Data show tank heaters did not operate over winter 2011/12 or 2012/13.
Total SUT electric power consumption		36.67	kW	

Appendix F: Major Component Specifications

POWER PARTNERS INC.

ECO-MAX
adsorption chillers
...for global cooling

Technical Support:
(706) 548-3121 x 505
eco-maxchillers.com

SUBMITTAL DATA: AD3-E-80 — 80 TON ADSORPTION CHILLER

Job Name:	Location:	Date:
Purchaser:	Engineer:	
Submitted to:	Approval:	Date:
Submitted by:	Schedule No.:	

GENERAL FEATURES:

- ►Ultra low electricity consumption
- ►Zero ozone depletion potential
- ►No dangerous chemicals
- ►Very few moving parts
- ►Ease of maintenance
- ►Advanced microprocessor control
- ►Designed for outdoor installation
- ►Wide temperature ranges allowed

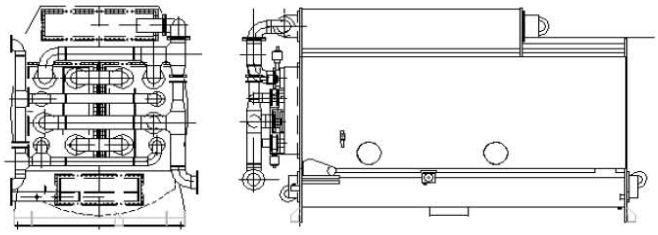

	Performance
Rated Capacity (Tons)	80
Chilled Water Flow	
Inlet Temperature (°F)	55
Outlet Temperature (°F)	45
Flow Rate (gpm)	192
Pressure Drop (ft. H_2O)	22
Condenser Water Flow	
Inlet Temperature (°F)	85
Outlet Temperature (°F)	95
Flow Rate (gpm)	550
Pressure Drop (ft. H_2O)	25
Hot Water Flow	
Inlet Temperature (°F)	195
Outlet Temperature (°F)	183
Flow Rate (gpm)	300
Pressure Drop (ft. H_2O)	12

*All data is preliminary and subject to change without notice.

Electrical

Voltage:..... 208/230-3-60
Frequency:..... 60 Hz
Operating kW Consumption:..... 0.8 kW
Maximum kW Consumption..... 1.9 kW

Air Supply

Air Pressure:..... 71 psi
Air Consumption:..... 0.34 cfm

Dimensions

Width..... 106"
Length..... 190"
Height..... 113"

Weight

Empty:..... 33,000 lbs
Operating:..... 36,080 lbs

Refrigerant type:..... Tap Water (H_2O)

Operating Range

Chilled Water..... 38 °F to 68 °F
Hot Water..... 125 °F to 200 °F
Condenser Water..... 50 °F to 102 °F
Maximum Pressure..... 70 psig

*Maximum pressure 70 psig for hot, chilled, & condenser water

Notes:
1. Control and vacuum cabinets to be mounted on rear of chiller
2. Water column shall be field removable

DIMENSIONS: AD3-E-80 — 80 TON ADSORPTION CHILLER

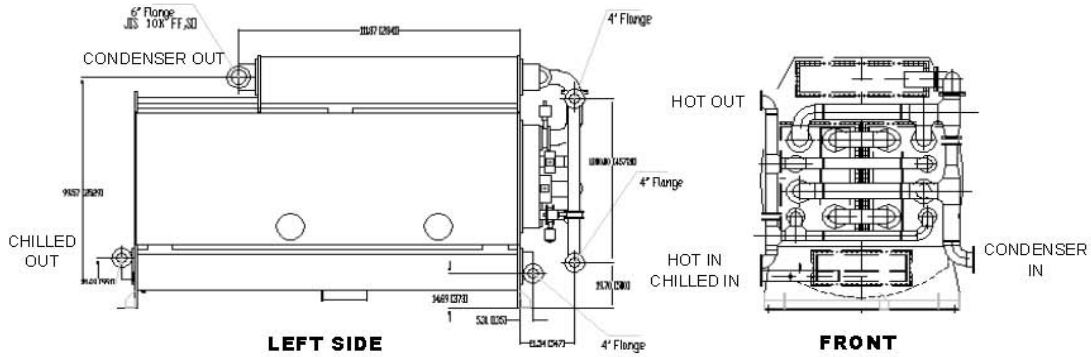

LEFT SIDE **FRONT**

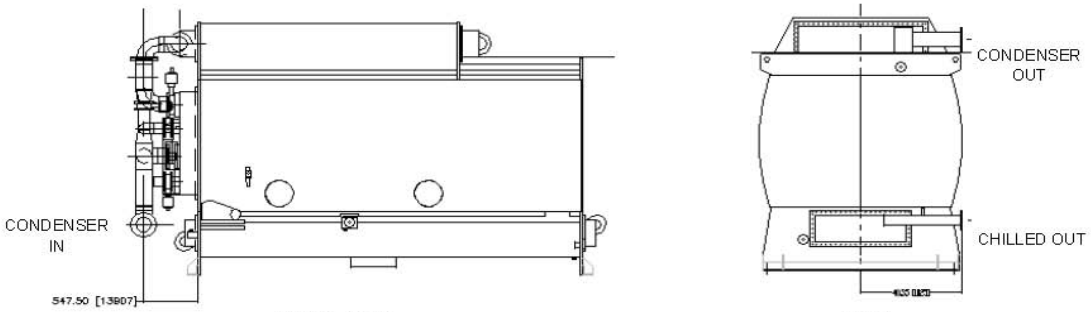

RIGHT SIDE **REAR**

(36" clearance typical for access to electrical and vacuum cabinets)

Weight
Empty..... 33,000 lbs
Operating..36,080 lbs

	Inlet	Outlet
Chilled.....	4"	4"
Condenser	6"	6"
Hot.....	4"	4"

*All are ANSI flanged connections

Field Notes:
Chiller must be leveled upon installation with included leveling bolts.
Three-way control valves are NOT required for field piping.
Minimum 30" clearance required in front of the chiller.
The piping configuration shall provide clear access to the chiller.
Installation and water treatment per IOM required.

Certified WBENC Women's Business Enterprise

POWER PARTNERS INC.
Power Partners, Inc.
200 Newton Bridge Road
Athens, Georgia 30607
Tel: (706) 548-3121 x 505
Fax: (706) 548-1929
wes.livingston@powerpartners-usa.com

Specifications are subject to change without notice.

SOLAR COLLECTOR CERTIFICATION AND RATING

SRCC OG-100

CERTIFIED SOLAR COLLECTOR

SUPPLIER: **Ritter Energie - und Umwelttechnik GmbH & Co. KG**
Kuchenaecker 2
Dettenhausen, D-72135 Germany

MODEL: CPC 45 Star Azzurro

COLLECTOR TYPE: Ritter Solar Tubular

CERTIFICATION#: 2008010B

COLLECTOR THERMAL PERFORMANCE RATING

Megajoules Per Panel Per Day				Thousands of BTU Per Panel Per Day			
CATEGORY (Ti-Ta)	CLEAR DAY	MILDLY CLOUDY	CLOUDY DAY	CATEGORY (Ti-Ta)	CLEAR DAY	MILDLY CLOUDY	CLOUDY DAY
A (-5 °C)	63.0	47.4	31.8	A (-9 °F)	59.8	45.0	30.2
B (5 °C)	61.4	45.8	30.2	B (9 °F)	58.2	43.4	28.6
C (20 °C)	58.7	43.1	27.5	C (36 °F)	55.7	40.9	26.1
D (50 °C)	52.6	37.2	21.8	D (90 °F)	49.9	35.3	20.7
E (80 °C)	46.3	30.9	15.5	E (144 °F)	43.9	29.3	14.7

A- Pool Heating (Warm Climate) **B-** Pool Heating (Cool Climate) **C-** Water Heating (Warm Climate) **D-** Water Heating (Cool Climate) **E-** Air Conditioning

Original Certification Date: 25-NOV-09

COLLECTOR SPECIFICATIONS

Gross Area:	4.940 m^2	53.17 ft^2
Dry Weight:	71.7 kg	158. lb
Test Pressure:	1103. KPa	160. psig

Net Aperature Area:	4.50 m^2	48.44 ft^2
Fluid Capacity:	4.1 liter	1.1 gal

COLLECTOR MATERIALS

Frame: Aluminum
Cover (Outer): Glass Vacuum Tube
Cover (Inner):

Pressure Drop

Flow		ΔP	
ml/s	gpm	Pa	in H_2O

Absorber Material: Tube - Stainless Steel / Plate - Aluminum
Absorber Coating: Aluminum Nitride

Insulation Side: Vacuum
Insulation Back:

TECHNICAL INFORMATION

Efficiency Equation [NOTE: Based on gross area and (P)=Ti-Ta]				Y INTERCEPT	SLOPE
S I UNITS:	**η= 0.578**	**-0.82770 (P)/I**	**-0.00372 $(P)^2/I$**	**0.580**	**-1.050 $W/m^2.°C$**
I P UNITS:	**η= 0.578**	**-0.14580 (P)/I**	**-0.00036 $(P)^2/I$**	**0.580**	**-0.185 $Btu/hr.ft^2.°F$**

Incident Angle Modifier [(S)=1/cosθ - 1, 0°<θ<=60°]		
Kta = 1	-0.076 (S)	0.212 $(S)^2$
Kta = 1	-0.14 (S)	Linear Fit

Model Tested: CPC 30 Star Azzurro
Test Fluid: Water
Test Flow Rate: 13.4 ml /s.m^2 0.0197 gpm/ft^2

REMARKS: Collector tested with long axis of tubes oriented north-south. IAM perpendicular to the tubes is listed above. IAM parallel to the tubes = 1.0 - 0.13(S)

April, 2011
Certification must be renewed annually, For current status contact:
SOLAR RATING & CERTIFICATION CORPORATION
c/o FSEC ♦ 1679 Clearlake Road ♦ Cocoa, FL 32922 ♦ (321) 638-1537 ♦ Fax (321) 638-1010

Appendix G: Factory Acceptance Test Results

Table 17. Factory Acceptance Test Results

Test #	CT Flow Rate (gpm)	CT Supply Temp (^{0}F)	CT Return Temp (^{0}F)	HW Flow Rate (gpm)	HW Supply Temp (^{0}F)	HW Return Temp (^{0}F)	Evap Flow Rate (gpm)	Evap Supply Temp (^{0}F)	Evap Return Temp (^{0}F)	Capacity (RT)	Adjusted COP	Cycle Time (mins)	Q_CT (RT)	Q_HW (RT)	Energy Balance
CT159	600	85	98	581	195	184	298	55	47	103	0.44	8	309	246	113%
CT158	401	85	103	581	195	185	298	55	47	96	0.42	8	297	238	112%
CT157	200	85	114	581	195	186	298	55	49	71	0.37	8	242	203	113%
CT140	574	76	83	290	158	147	199	52	45	63	0.53	20	162	126	117%
CT139	575	82	89	290	157	143	199	53	46	62	0.41	8	189	158	116%
CT138	574	79	85	290	156	147	200	52	45	58	0.52	20	149	116	117%
CT137	575	78	84	290	148	139	200	53	46	56	0.56	20	140	105	115%
CT136	575	78	83	290	142	134	201	53	47	49	0.56	20	124	91	114%
CT135	574	78	84	290	151	142	200	54	47	59	0.57	20	145	108	115%
CT134	575	78	83	290	139	133	200	48	43	37	0.51	15	101	77	114%
CT133	575	79	83	290	149	142	201	48	43	39	0.50	15	104	83	116%
CT132	575	79	83	290	158	150	201	48	43	39	0.46	8	104	89	124%
CT131	576	79	87	289	157	144	200	53	45	68	0.47	8	188	152	117%
CT130	578	79	83	291	159	154	201	48	45	27	0.51	21	106	55	77%
CT129	575	76	81	291	158	151	200	50	44	50	0.56	26	123	94	117%
CT128	575	75	82	290	158	148	200	52	45	61	0.55	26	153	117	115%
CT123	550	85	97	290	177	158	200	63	51	99	0.44	8	283	237	119%
CT122	550	85	98	290	191	169	200	63	49	109	0.43	8	317	267	119%
CT115	576	85	94	300	193	179	201	55	46	77	0.47	16	209	173	119%
CT114	577	85	93	290	193	181	201	55	47	68	0.48	21	182	151	121%
CT113	574	77	83	290	161	151	202	48	42	52	0.49	21	139	113	119%
CT112	575	76	83	290	160	149	202	53	45	66	0.53	21	169	132	117%
CT111	575	75	82	290	160	149	202	55	47	71	0.54	21	180	139	117%
CT110	575	84	91	290	160	150	201	63	54	68	0.56	21	169	128	116%
CT109	575	76	84	290	160	149	202	58	49	76	0.57	21	185	139	116%
CT108	575	78	84	290	160	151	202	50	44	55	0.51	21	143	113	118%
CT107	576	78	84	290	160	150	202	53	45	61	0.52	21	159	123	116%
CT106	575	78	84	290	160	150	202	54	46	64	0.53	21	162	126	117%

Test #	CT Flow Rate (gpm)	CT Supply Temp (^{0}F)	CT Return Temp (^{0}F)	HW Flow Rate (gpm)	HW Supply Temp (^{0}F)	HW Return Temp (^{0}F)	Evap Flow Rate (gpm)	Evap Supply Temp (^{0}F)	Evap Return Temp (^{0}F)	Capacity (RT)	Adjusted COP	Cycle Time (mins)	Q_CT (RT)	Q_HW (RT)	Energy Balance
CT105	575	78	85	290	160	148	202	54	45	73	0.54	16	186	143	116%
CT104	550	84	91	290	160	151	200	58	51	59	0.54	23	154	115	113%
CT087	550	85	93	300	195	180	191	56	49	56	0.33	16	194	179	121%
CT086	550	85	98	300	193	168	190	55	48	61	0.21	5	304	315	124%

Appendix H: Chiller Performance Summary Data

Table 18. Chiller Performance Summary

Case	Submittal		FAT (CT109)		Case A		Case B1		Case B2		Case B3		Case B4		Case C1		Case C2	
Start Date/Time	na		7/26/2010		10/21/2011 0:00		3/29/2012 0:00		4/9/2012 0:00		5/13/12 0:00		5/17/12 0:00		6/15/2012 12:00		6/22/2012 0:00	
End Date/Time	na		7/26/2010		10/26/2011 0:00		4/6/2012 0:00		4/12/2012 0:00		5/16/12 0:00		5/22/12 0:00		6/18/2012 10:00		6/26/2012 0:00	
System Status	Submittal Specification		Factory Acceptance Test Run CT109 (21 minute cycle)		Solar field operating. Chiller on 11 minute cycle.		Chiller operating on steam only (11 minute cycle). Solar field out of service.		Chiller operating on steam only (11 minute cycle). Solar field out of service.		Chiller operating on steam only (7 minute cycle).		Solar field operating. Chiller on 7 minute cycle.		Chiller operating on steam only (7 minute cycle). Solar field out of service.		Chiller operating on steam only (7 minute cycle). Solar field out of service.	
Building Status	na		na		Dining temperature 75, kitchen temperature 75-90, daytime highs near 90.		Indoor temperatures at or below set point (78F), daytime highs near 90.		Indoor temperatures at or below set point (78F), daytime highs near 90.		Indoor temperatures at or below set point (78F), daytime highs near 90.		Indoor temperatures at or below set point (78F), daytime highs near 90.		Indoor temperatures at or below set point (78F), daytime highs in the 90's.		Indoor temperatures at or below set point (78F), daytime highs in the 90's.	
Notes	na		Chiller performance accepted based on this result.		Only stable operating period prior to winter 2011/12 shutdown for redesign.		Period selected after chiller recommissioning on 3/20. Base steam supply limited to providing 150 F hot water.		Period selected after chiller recommissioning on 3/20. Base steam supply limited to providing 150 F hot water.		Period selected after repair of base steam supply and outage on 5/11-12, and before solar startup on 5/16.		Period selected following re-commissioning of solar loop on 5/16 and prior to outage on 5/23 - which was followed starting 5/25 with electric chiller damage and control issues that persisted for remainder of operating season.		Period selected following system recommissioning on 6/10 and outage 6/11-14 due to steam outage - and prior to increase in hot water supply temperature.		Period selected following increase in hot water supply temperature.	
Performance Assessment	na		Southern deemed performance acceptable based on this test run.		Chiller output lower than expected due to low (155 F) hot water supply temperature and low condenser and chilled water flow.		Chiller output lower than expected due to low (150 F) hot water supply temperature and low condenser and chilled water flow.		Chiller output lower than expected due to low (150 F) hot water supply temperature and low condenser and chilled water flow.		Chiller performance below expectation due to inadequate heat removal (condenser water flow lower than specification and fouled heat exchanger)		Chiller performance below expectation due to inadequate heat removal (condenser water flow lower than specification and fouled heat exchanger)		Chiller performance improved due to higher hot water supply temperature and better heat removal (condenser heat exchanger cleaned and flow increased), but flow increase was not as large as hoped (still below specification).		Chiller performance improved due to higher hot water supply temperature and better heat removal (condenser heat exchanger cleaned and flow increased), but flow increase was not as large as hoped (still below specification).	
Period Hours	na		na		120.0		216.0		72.0		72.0		120.0		70.0		96.0	
Outage Hours	na	**Avg. RT**	na	**Avg. RT**	0.0	**Avg. RT**	0.0	**Avg. RT**	0.0	**Avg. RT**	0.0	**Avg. RT**	0.3	**Avg. RT**	0.0	**Avg. RT**	0.0	**Avg. RT**
Adsorption Chiller Output (MMBtu/Avg. RT)	na	80	na	76	51.3	35.7	93.7	36.1	36.5	42.2	39.2	45.3	66.1	46.0	43.0	51.2	60.8	52.8
Electric Chiller Output (MMBtu/Avg. RT)	na	na	na	na	0.3	0.2	52.2	20.1	4.6	5.3	16.5	19.1	10.5	7.3	13.8	16.4	39.0	33.8
Solar+Steam Input (MMBtu/Avg. RT)	na	na	na	na	109.8	76.3	255.5	98.6	80.6	93.3	48.1	55.7	115.6	80.5	102.1	121.5	151.7	131.7
Steam Input (MMBtu/Avg. RT)	na	150	na	133	118.7	82.4	218.6	84.3	68.9	79.7	75.0	86.8	132.8	92.5	95.8	114.0	150.1	130.3
Solar Input (MMBtu/Avg. RT)	na	na	na	na	18.2	12.6	0.0	0.0	0.0	0.0	0.0	0.0	10.9	7.6	0.0	0.0	0.0	0.0
Condenser Heat Removal (MMBtu/Avg. RT)	na	229	na	192	145.8	101.3	276.0	106.5	95.0	110.0	104.5	120.9	181.6	126.5	150.7	179.4	216.8	188.2
Average HW Supply/(Return) Temp (F)	195/(183)		160/(149)		154.7		150.9		149.2		159.3		164.5		178.9		185.5	
Average Condenser Supply/(Return) Temp (F)	85/(95)		76/(84)		82.2		86.8		84.3		88.9		89.2		92.6		93.5	
Chilled Water Supply/(Return) Temp (F)	55/(45)		58/(49)		59.0		59.9		59.5		61.1		60.6		60.6		60.3	
Average Condenser Delta (F)	10		12		4.9		5.2		5.3		5.9		6.7		8.6		9.0	
Average Adsorption Chilled Water Delta (F)	10		9		4.8		3.1		3.9		4.4		4.5		7.2		7.4	
HW Supply Flow (gpm)	300		290		318.3		304.0		304.0		305.7		305.9		300.0		300.0	
Condenser Water Flow (gpm)	550		575		493.4		495.5		497.6		490.0		460.1		503.7		502.6	
Chilled Water Supply Flow (gpm)	192		202		176.8		176.1		176.3		175.4		171.8		170.7		171.2	
Chiller COP	53%		57%		43%		43%		53%		52%		50%		45%		41%	
Energy Balance (solar_steam)	na		na		111%		127%		123%		84%		100%		96%		98%	
Energy Balance (steam)	100%		109%		117%		113%		111%		109%		110%		92%		97%	

Appendix I: System Performance Charts

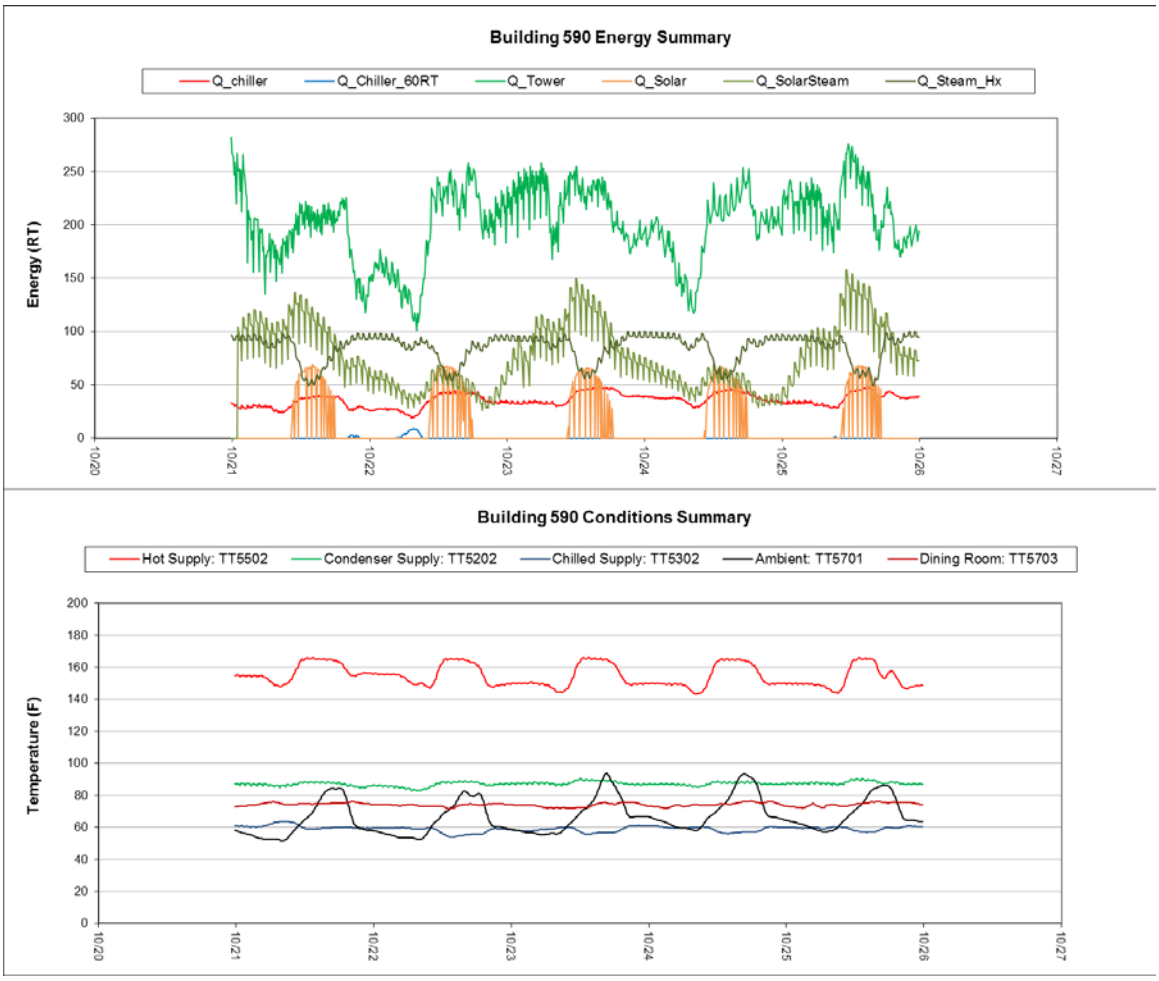

Figure 5. System Performance Charts 10/21-26, 2011

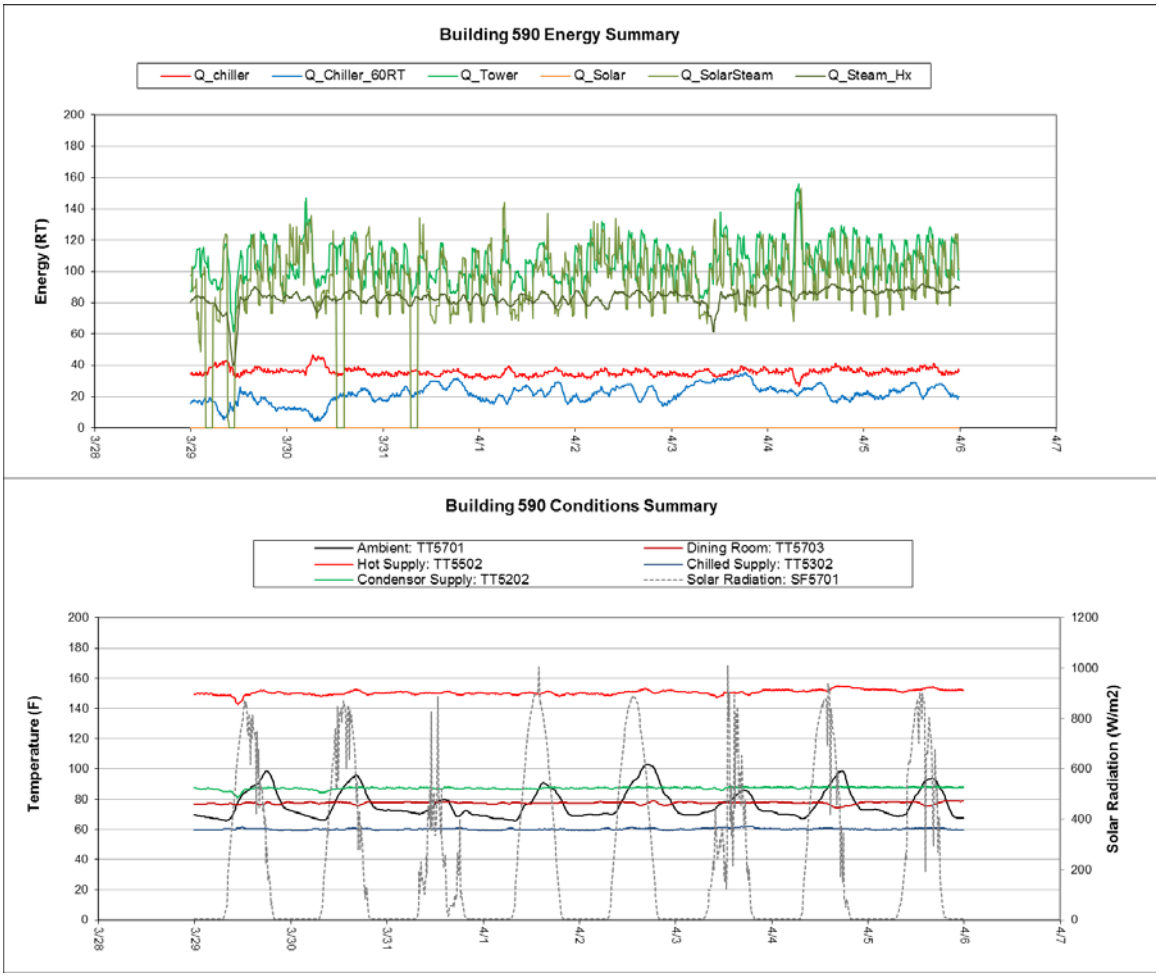

Figure 6.System Performance Charts 3/29 -4/6. 2012

Figure 7. System Performance Charts 4/9-12, 2012

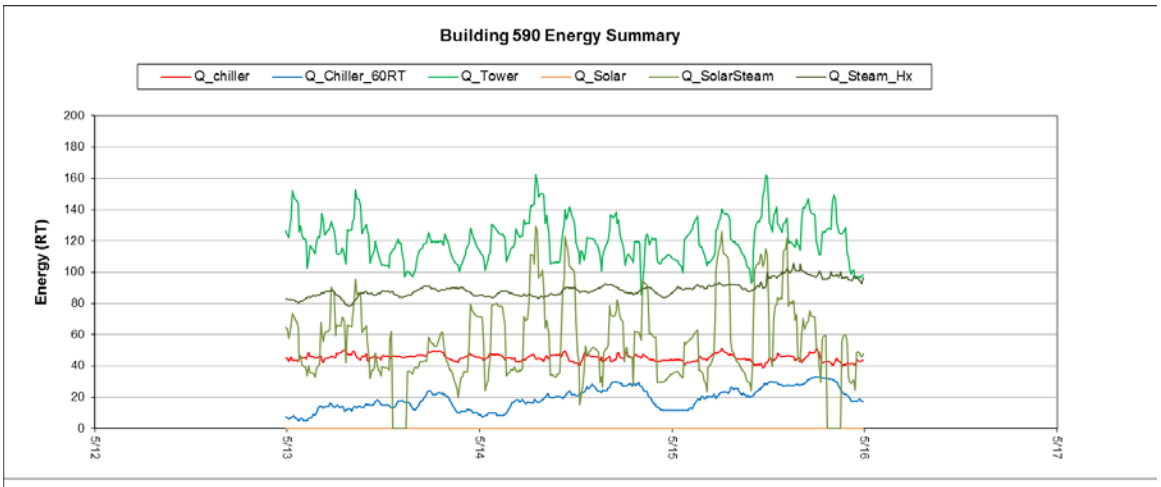
Building 590 Energy Summary
Q_chiller
Q_Chiller_60RT
Q_Tower
Q_Solar
Q_SolarSteam
Q_Steam_Hx
Energy (RT)
200
180
160
140
120
100
80
60
40
20
0
5/12
5/13
5/14
5/15
5/16
5/17

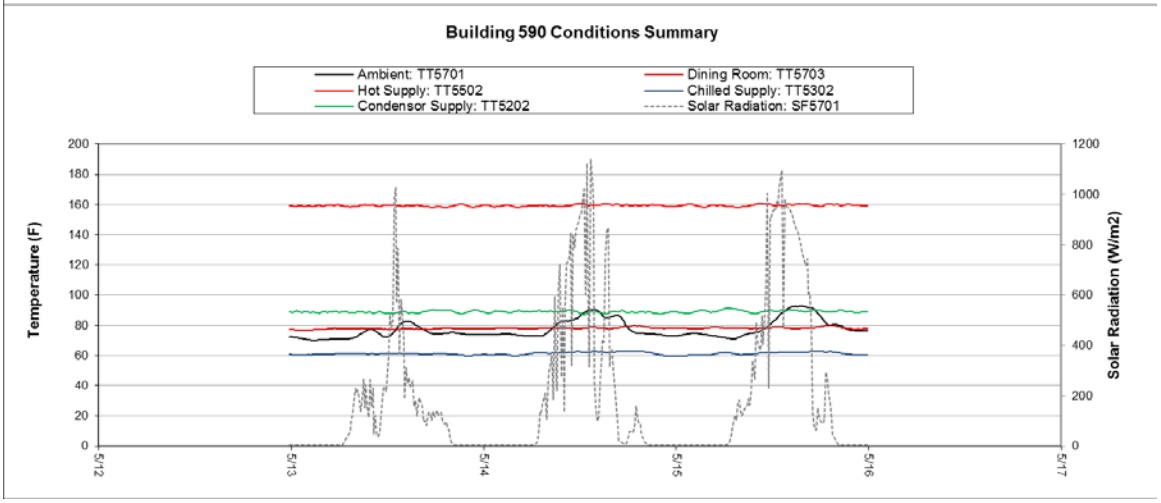
Building 590 Conditions Summary
Ambient: TT5701
Dining Room: TT5703
Hot Supply: TT5502
Chilled Supply: TT5302
Condensor Supply: TT5202
Solar Radiation: SF5701
Temperature (F)
Solar Radiation (W/m2)
200
180
160
140
120
100
80
60
40
20
0
1200
1000
800
600
400
200
0
5/12
5/13
5/14
5/15
5/16
5/17

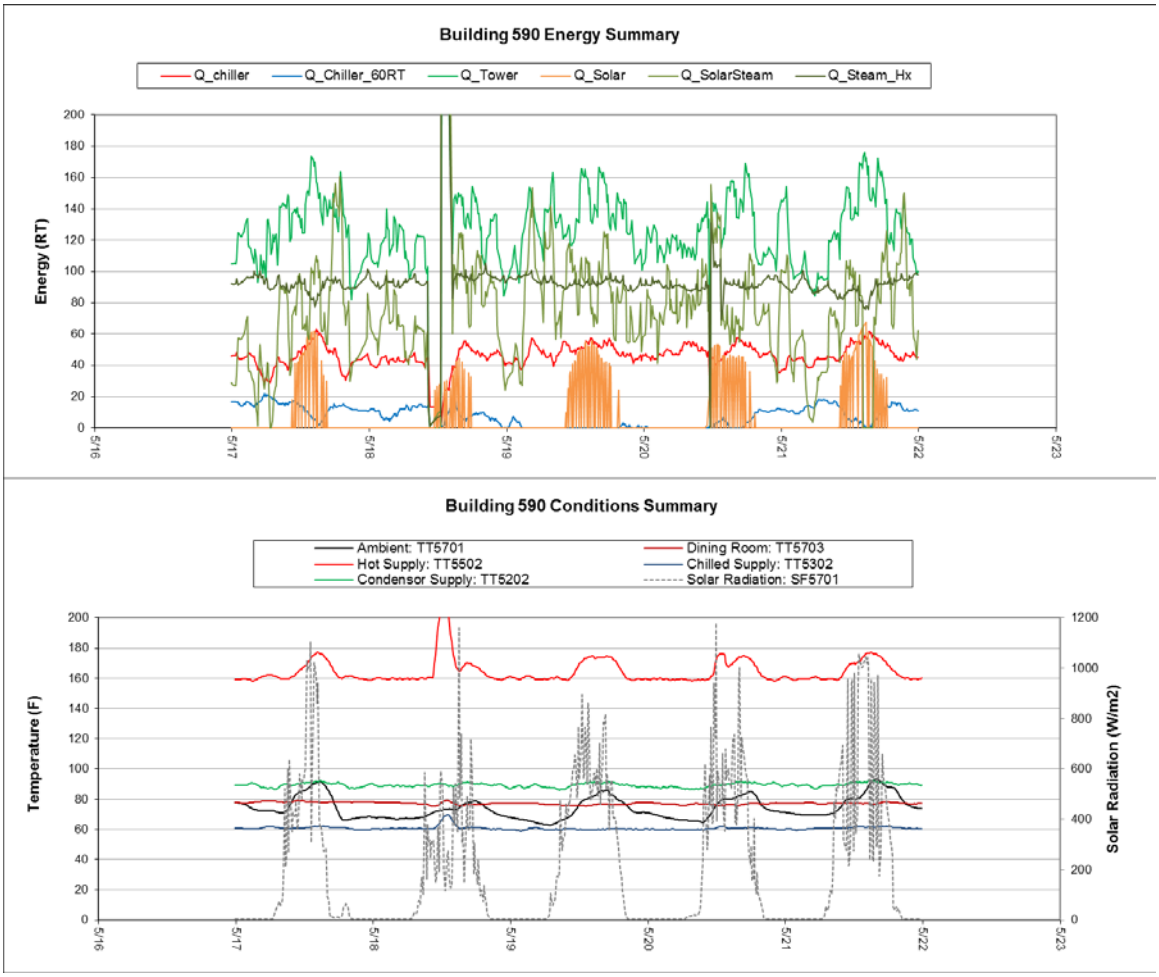

Figure 9. System Performance Charts 5/17-22, 2012

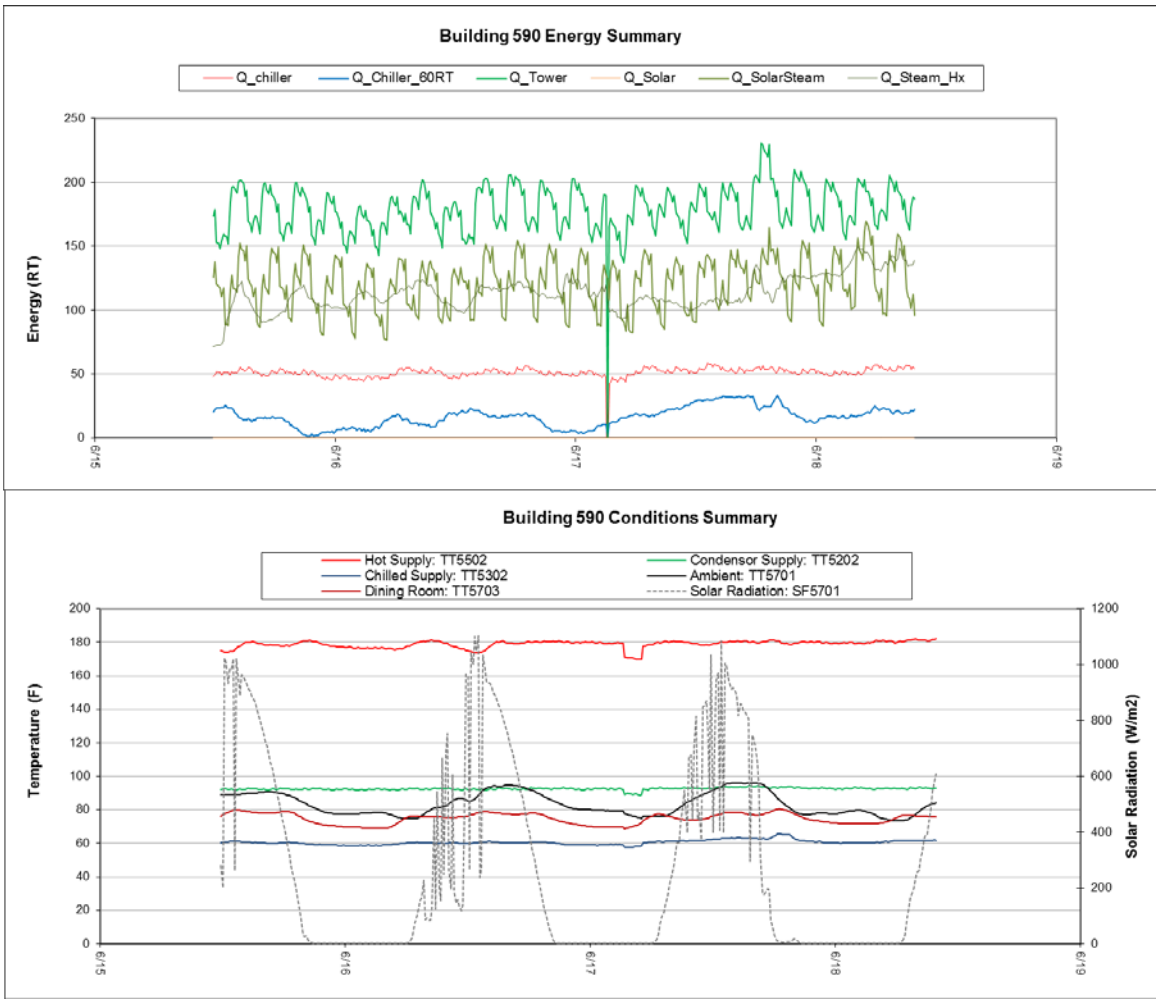

Figure 10. System Performance Charts 6/15-18, 2013

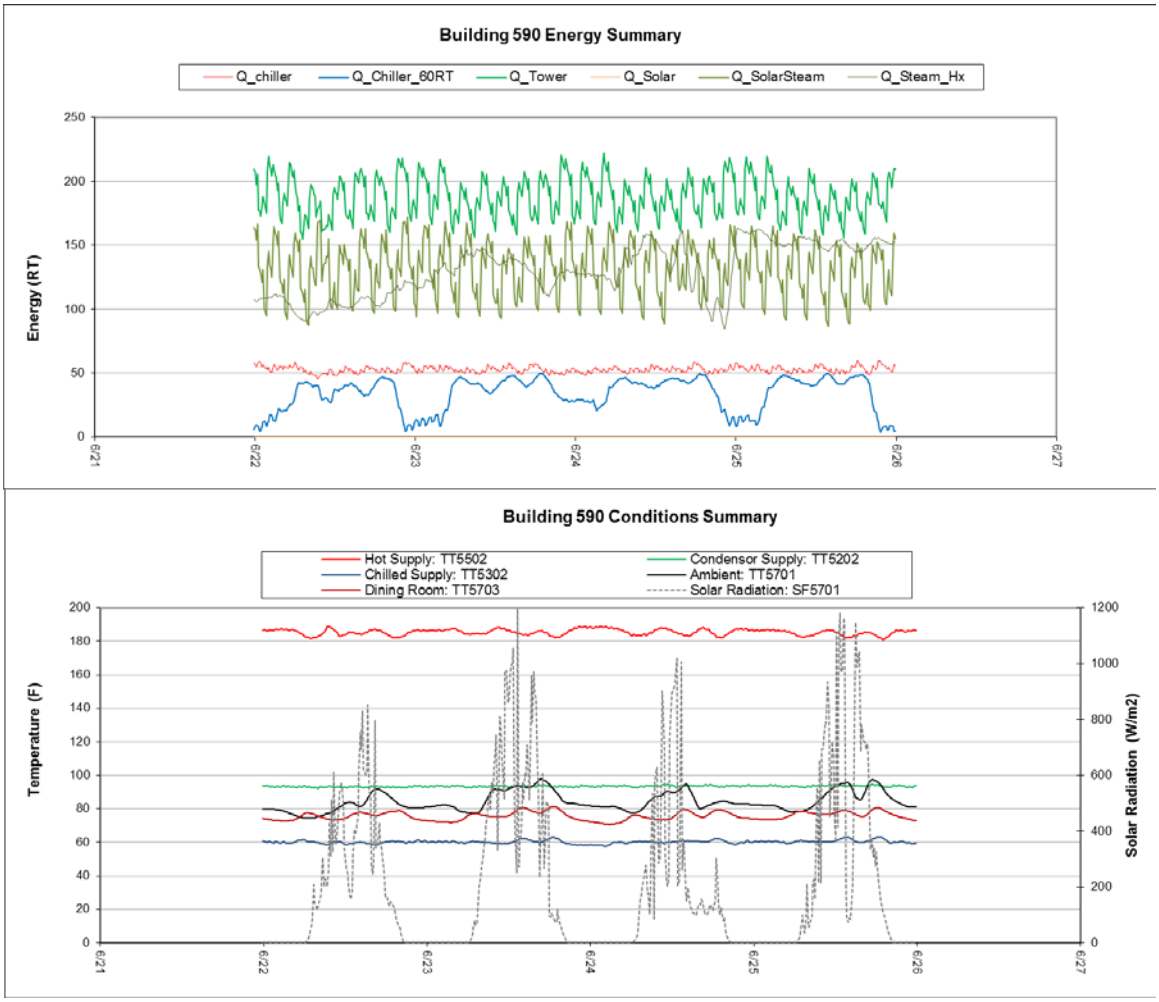

Figure 11. System Performance Charts 6/22-26, 2013

Appendix J: System Schematics

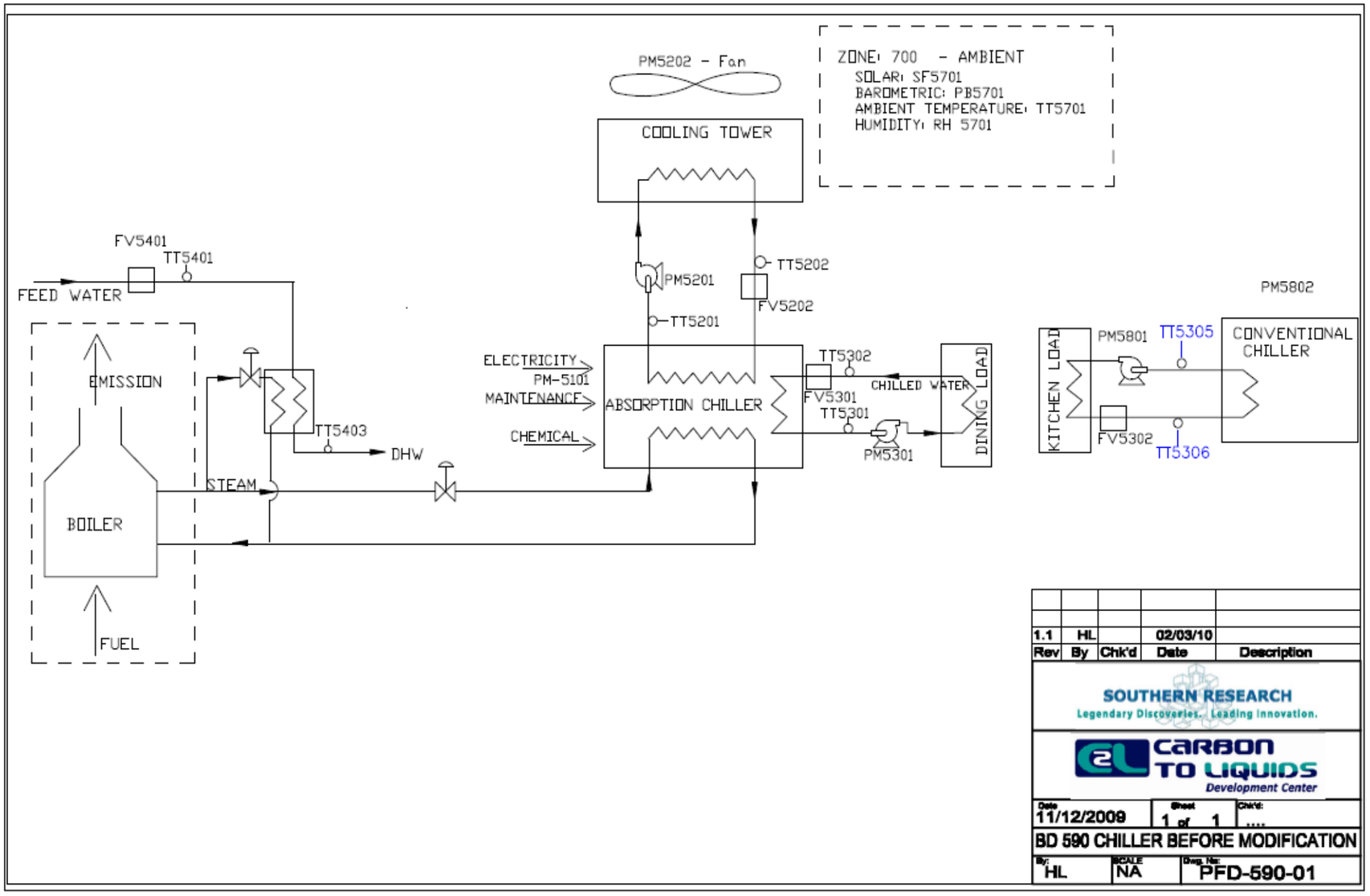

Figure 12. Baseline System Configuration

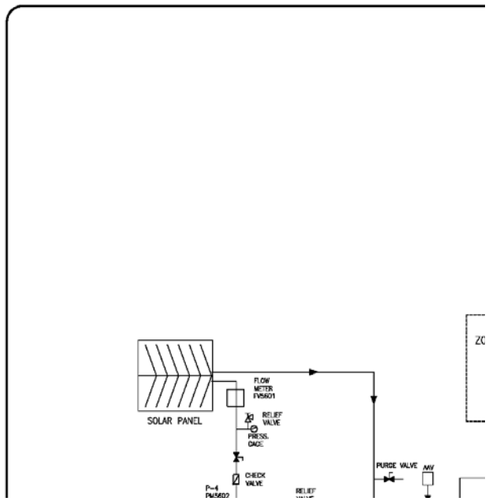

Figure 13. Test System Configuration