ESTCP Project Outbrief

Demonstration and Validation of a Waste-to-Energy Conversion System for Fixed DoD Installations

EW-200932
Mike Cushman
Infoscitex Corporation

EW-200932: Demonstration and Validation of a Waste-to-Energy Conversion System for Fixed DoD Installations

Technology

• MSW Power GEM waste to energy conversion system:
a containerized, distributed WEC solution capable of converting co-mingled, mixed waste streams into electricity and heat
• The GEM utilizes downdraft gasification for waste conversion

Demonstration

• Installation and demonstration at a landfill facility in CA

Technical & Economic Performance Results

- Sought: Net positive energy generation while reducing weight of solid waste disposed of in landfill while achieving attractive ROI
- Achieved: Net 40 kWe power generation with ~90% reduction in solid waste disposal; poor ROI for demo site

Project Hurdles

- Unforeseen complications with state and local permitting, as well as issues with local utility provider negatively impacted project timeline and required adjustment of demonstration scope

Technology Transfer Outlook

- Targeting forward operations (FOBs and contingency basing), Targeting private sector where waste burden and utility costs present favorable ROI

Performer: Infoscitex Corporation

Demonstration Site(s)**:** Edwards Air Force Base

Project Team

- Michael Cushman, PI, Infoscitex Corporation
- Matthew Young, Co-PI, IST Energy Corporation
- Steven Madoski, Co-PI, Edwards Air Force Base

Background

- Waste to energy solutions have the potential to support ESTCP's objectives in presenting means for energy cost reduction, environmental impact mitigation, and energy security
- The GEM System was demonstrated as a test bed for potential benefits of waste-to-energy solutions
  - Developed by IST, Productized by MSW Power
  - Distributed, Modular Waste to Energy Conversion System
  - 3 tpd throughput; designed to handle co-mingled mixed waste streams typical of military and institutional operations

Technical Objectives

- Reduce amount of solid waste requiring disposal
- Generate net electricity for on-site use
- Match quality of typical local power utility
- Generate net waste heat for on-site use
- Reduce carbon footprint
- Conform to ambient air quality for State of California
- Estimate simple payback period
- Demonstrate system robustness
- Demonstrate ease of use
- Demonstrate an automatic control system
- Identify single point system failures

Performance Objectives & Results

Performance Objective	Metric	Data Requirements	Success Criteria	Result	Rating
Quantitative Performance Objectives					
Reduce amount of solid waste requiring disposal	Tons/day of solid, non-hazardous, non-construction, waste sent to landfill	Disposal data and ash content of solid waste	<10% by weight of solid waste processed by GEM WEC disposed of in landfill.	**Success.** ~10% (mass basis) of the waste processed by the GEM required landfill disposal.	**GREEN**
Generate net electricity for on-site use	Efficiency of energy production process to produce electricity	Metering data for net electricity produced and energy of solid waste processed by gasifier (kW_T)	>7% net electricity generated per energy contained in solid waste.	**Success.** ~23% net electricity generated per energy contained in the solid waste.	**GREEN**
			>36 kW_e*.	**Success**. ~40 kWe net electric output.	
Power quality	Variations in voltage, frequency, flicker, harmonics, power factor and direct current injection	Monitoring data for AC power supplied to site and AC power generated by GEM WEC	Match quality typical of local utility.	**Mixed Result**. Due to issues with the local utility provider an interconnection agreement was not executed. A full set of data was therefore not achievable. Data that collected was favorable.	**YELLOW**
Generate net waste heat for on-site use	Efficiency of energy production process to produce usable waste heat	Energy content of recoverable of waste heat and energy of solid waste processed by gasifier (kW_T)	>22% energy of recoverable waste heat per energy contained in solid waste	**N/A.** Due to host site determining waste heat capture was not of interest, and in the interest of moving the demonstration forward, this objective was not pursued.	**BLACK**

Performance Objectives & Results

Performance Objective	Metric	Data Requirements	Success Criteria	Result	Rating
Quantitative Performance Objectives					
Reduce carbon footprint	Life-cycle reduction in installation carbon footprint	Inventory of carbon emissions and sequestrations	>45% reduction in total installation carbon footprint compared with landfill of solid waste.	**Success.** 101% reduction in total carbon footprint was calculated	**YELLOW**
			> 520 metric tons GHG/yr**)	**Deficient**. 200 metric ton GHG/year (full capacity operation) reduction	
Conform to ambient air quality for State of California	Concentration of gas contaminants in generator emissions	Third party/IST gas emission monitoring data	Not to exceed CARB off-road large spark ignition (>19 kW_e), > 1 liter) emission standards for HC + NO_x and CO (see Table 3-3).	**Deficient with Caveat.** Air emission testing revealed acceptable levels of PM and CO. However, the system failed for NMHC+NOx. This was due to load balancing issues with load bank.	**YELLOW**
Estimate simple payback period	Ratio of system cost to annual energy and landfill savings	Net electricity and waste heat generated, reduction in solid waste to landfill, unit cost of energy, landfill disposal costs, and system cost	Less than 5 years payback period for 3 tons/day system.	**Deficient**. For the demo site, the GEM does not represent an attractive return on investment.	**RED**
System robustness	Time in hours for system operation and maintenance	Logs of system operation and maintenance	>7 out of 8 hours per day for 8/5 operation and >22 hours per day for 24/7 operation; no more than 8 hours per month maintenance time	**Deficient with Caveat.** Mixed results in meeting operating time per test segment.	**YELLOW**

Performance Objectives & Results

Performance Objective	Metric	Data Requirements	Success Criteria	Result	Rating
Qualitative Performance Objectives					
Ease of use	Ability of a technician-level individual to operate GEM WEC system†	Feedback from the technician on usability of the technology and time required to use	One field technician LOE able to routinely operate GEM WEC control system with minimal supervision.	**Success with Caveat.** System operation required a single operator. Note: logistics of site waste disposal program required a person to address hazards. No material breakdown was required before entering the system.	**GREEN**
Automatic control system	Remote process control and data collection of GEM WEC system	Logs of operating and performance data	Control system able to remotely monitor, operate and provide on-line data collection of GEM WEC system	**Success.** Remote operation and data collection demonstrated.	**GREEN**
Identify single point system failures	Consequences and probability of single point system failures on system robustness	Listing of critical replacement components having most impact on system downtimes and equipment replacement costs	Estimates of downtimes and capital equipment replacement costs	**Mixed Result**. Single point failures were observed, but were determined to be feedstock specific. Mitigation strategies have been identified and implemented in subsequent production of the GEM.	**YELLOW**

Technical Approach

- Three Major Activities:
  - Demonstration Planning
  - GEM Preparation
  - Demonstration

Technical Approach – Demonstration Planning

- Preparation of Demonstration Plan
- Installation Upgrades/System Accommodations
- Regulatory and Permitting Matters

Site Selection

- Edwards Air Force Base, CA
- Landfill facility between baler building (Bldg 7996) and ROC building (Bldg 7998)

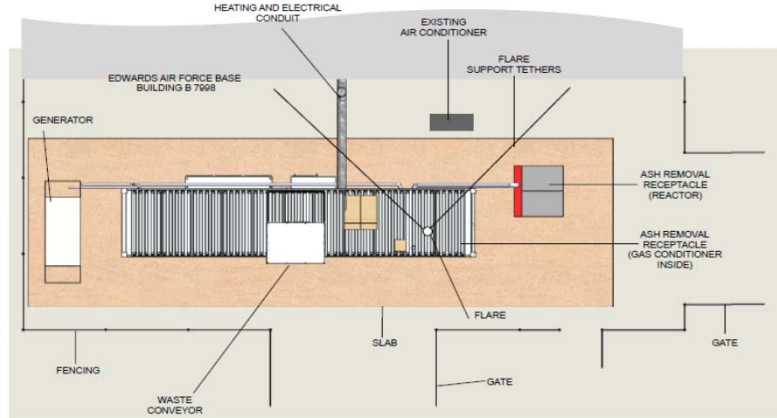

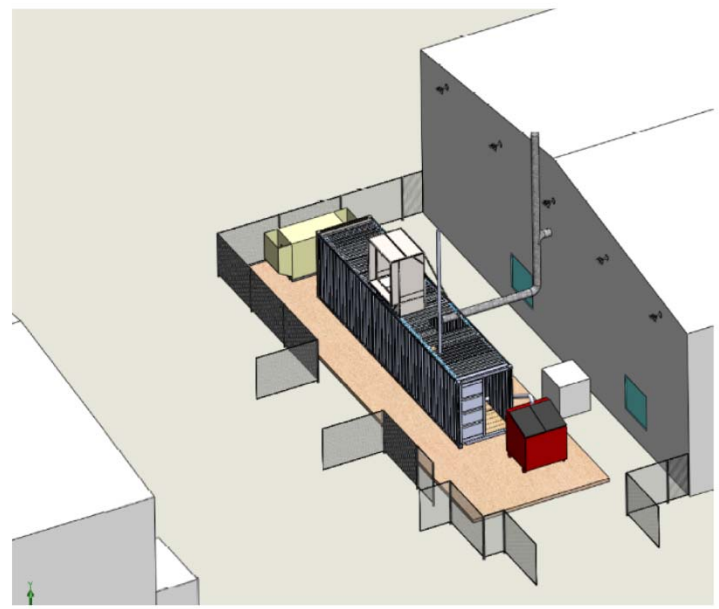

Installation Accommodations

Regulatory & Permitting

- Permitting
  - Operation of the demonstration at Edwards AFB required a number of permits and licenses
  - Fulfillment of the "Permitting" task has involved several iterations:
    - Project onset: We need two approvals –
      - Air Pollution Experimental Exemption
      - License to Operate at Edwards AFB
    - Iteration 1: We need utility tie-in approval as well –
      - Southern California Edison (SCE) Generating Facility Interconnection Application
        - This was foregone in interest of time – SCE was not responsive to our timeline
    - Iteration 2: We need CA state solid waste authority approval since we're physically operating at a landfill
      - Legal position letter to State of CA from AF JAG
    - Iteration 3: CA State Authority "[we defer to Kern County]"
      - Form CIWMB169 Enforcement Agency Notification submittal to Kern County Environmental Health Services
    - Iteration 4: CA State Authority (CalRecycle) "[we now take exception and do not approve]"
      - Edwards AFB position that NEPA under which they and Kern County have allowances to operate experimental projects is functionally equivalent to CEQA
      - CalRecycle determined that they do not agree
      - Report on MA activities prepared, submitted to CalRecycle to resolve issue
      - Issue resolved, demonstration proceeded

Technical Approach – GEM Preparation

- System Build
  - System was built in Massachusetts
  - No R&D associated with this contract
- System Shakedown
  - System was extensively shaken down at IST's MA facility
- System Installation
  - System was shipped and installed at EAFB

Technical Approach – Demonstration

- Initial Start-Up and Commissioning
- Five-Day Weekly (5 days x 8 hour) Operation
- Six-Day Weekly (6 days x 24 hour) Operation
- Shutdown
- System Disposition

Technical Approach – Process Instrumentation

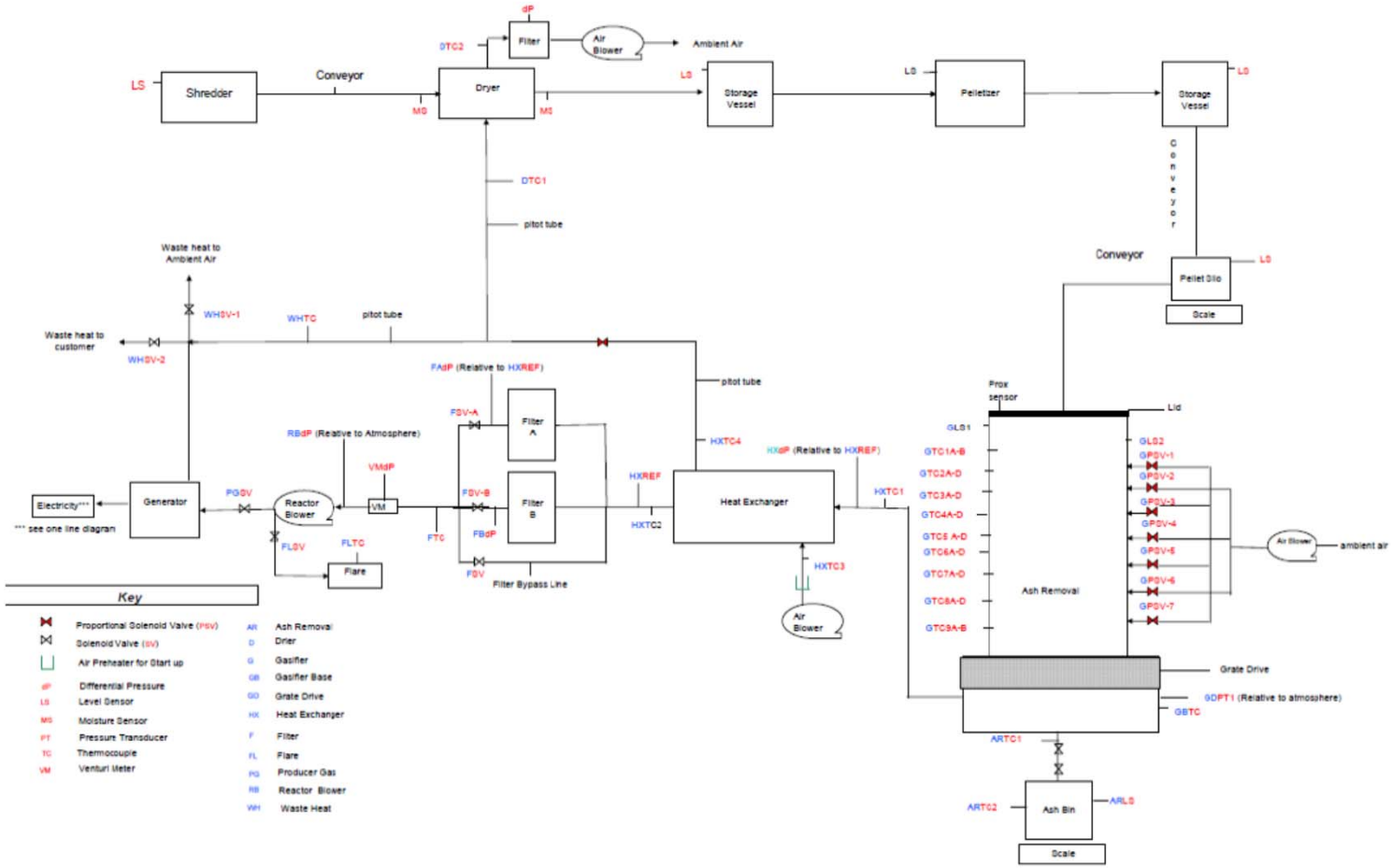

Technical Approach – Sample Collection

Operational Phase	Sample	No of Samples Collected	Collection Frequency	Collection Duration (days)
Initial Start Up	Solid waste feed	6	1/day	1
	Pellets*	6	1/day	
	Tar analysis**	NA	1/day	
Commissioning	Solid waste feed	6	2/5 days	10
	Pellets*	6	2/5 days	
	Pellets (energy content)***	2	1/day	
	Bottom ash	3	2/5 days	
	Fly ash	3	1/5 days	
	Tar analysis*	NA	2/5 days	
	Particulates	1	1/5 days	
Five Day Weekly (5 x 8)	Solid waste feed	2	1/5 days	40
	Pellets****	2	1/5 days	
	Pellets (energy content)***	2	1/day	
	Bottom ash	2	1/5 days	
	Fly ash	2	1/5 days	
	Tar analysis**	NA	1/3 days	
	Particulates	1	1/5 days	
Six Day Weekly (6 x 24)	Solid waste feed	2	1/5 days	12
	Pellets****	2	1/5 days	
	Pellets (energy content)***	2	1/day	
	Bottom ash	2	1/5 days	
	Fly ash	2	1/5 days	
	Tar**	NA	1/3 days	
	Particulates	1	1/5 days	

* Full analysis
** Tars will not be collected, but will be analyzed in line. A frequency of 2/5 days indicates that tars will be analyzed twice over a five day period.
*** Pellets will only be analyzed for their heating value.
**** Pellets will be analyzed for ash, volatiles, fixed carbon and moisture content.

Results

Performance Metric	Target Value	Achieved Value
Total GEM Operation (hours)	592	468
Total Waste Processed (tons)	74	16.9
Avg. Waste Processed (lbs/hr)	250	72
Max Waste Processed (lbs/hr)	250	293.95
Max Average Ash Output (% of average waste processed)	10%	9.97%
Total $kWh_{(e)}$ Produced	25,974	13,689
Peak $kW_{(e)}$ Produced	64	62
Net Peak $kW_{(e)}$ Produced	36	40
Total kW_{th} Recovered	0	0
Specific Power Yield (kWh/ton)	376	810
Energy Content of Waste (BTU/lb [kWh/lb])		
Average	n/a	7,331 [2.15]
High	n/a	8,399 [2.46]
Low	n/a	5,804 [1.70]
Gross Electrical Conversion Efficiency [Net after Parasitics]		18.8% [12.2%]

Results – Maintenance Performed during Demo

Date	Comments
7/23/2012	Built fines separator, inspected bottom of HX, Secondary Air flowmeter installed, Inspected baghouses, Cleaned dryer filter and exhaust line, General SWP cleanup
8/6/2012	Engine maintenance to support 24 x 6 run
8/7/2012	Engine maintenance to support 24 x 6 run
8/8/2012	Engine maintenance to support 24 x 6 run
8/10/2012	Engine maintenance to support 24 x 6 run
8/20/2012	Replaced filter bags. Cleaned heat exchanger. Emptied bottom ash and cyclone ash. Setup MKS. Inspected and cleaned shredder, dryer exhaust and dryer bed. Cleaned SWP floor.
8/21/2012	Finished putting HX cover on, installated new engine exhaust, vacuumed reactor side of container. Replaced TCs.
8/22/2012	Performed waste characterization of Edwards waste.
8/23/2012	Picked up vice clamp for MKS repair. Removed intercooler.
8/24/2012	Cleaned intercooler with acetone, removed old turbo and installed new one. Attempted to repair MKS.
9/10/2012	Travel day
9/11/2012	Prepared system for emission testing. Modified exhaust for sampling ports. Changed filter bags. Loaded char. Exchanged bottom ash and cyclone ash bins. Performed general cleanup of GEM area. Received TRC emission team and oriented them to GEM to ensure successful testing.
9/13/2012	Emptied reactor, cleaned heat exchanger. Organized ash barrels. Greased pellet mill, emptied heavies bin, changed dryer exhaust filter, cleaned dryer bed.
9/14/2012	Cleaned secondary air, inspected cyclone piping and venturi. Changed filter bags, bottom ash, and cyclone ash. General cleanup of GEM area.

Results – PBP for EDWARDS

PBP Factor	Notes/Comments	Edwards Air Force Base		
		Demo Data†	Full Capacity‡	Full Capacity‡ with Heat
Non-Recurring Up-front Costs				
GEM Purchase Price	Current commercial price from MSW Power Corporation	$1,1000,000	$1,1000,000	$1,1000,000
Installation Costs	Based on actuals for EAFB only	$47,000	$47,000	$47,000
Operator Training	Estimated cost of training	$15,000	$15,000	$15,000
Subtotal – Non-Recurring Up-front Costs		**$1,162,000**	**$1,162,000**	**$1,162,000**
Annual Savings via Cost Avoidance				
Electricity Savings	Assumed $0.08/kWh retail cost	$24,175	$45,000	$45,000
Heat Savings	Assumed $0.03/kWh natural gas	$0	$0	$40,800
Waste Disposal Savings	Assumed $75/ton	$18,400	$63,900	$63,900
Subtotal – Annual Savings via Cost Avoidance		**$42,875**	**$108,900**	**$149,700**
Annual Recurring Costs				
Consumables	Based on actuals for EAFB only, annualized	$13,000	$13,000	$13,000
Maintenance	Based on actuals for EAFB only, annualized	$13,000	$13,000	$13,000
Subtotal – Annual Recurring Costs		**$26,000**	**$26,000**	**$26,000**
Total Annual Benefit (Cost Avoidance Less Recurring Costs)				
		$16,875	**$82,900**	**$123,700**
Simple Payback Period				
Simple PBP		69 years	14 years	9.4 years

PBP – Sensitivity Analysis

- Assumptions:
  - 24x6 operation: 7444 hrs/yr
  - 3 tpd (930 tons/yr) waste throughput
  - Avg net output of 66 kWe and 182 kWth
  - Solid:gas efficiency = 90%
  - $1.1M purchase price, $47k installation cost, $15k training
  - Recurring $13k for consumables, $13k for maintenance
  - Baseline utility costs:
    - $0.08/kWh electric
    - $0.03/kWh heat
    - $75/ton waste disposal

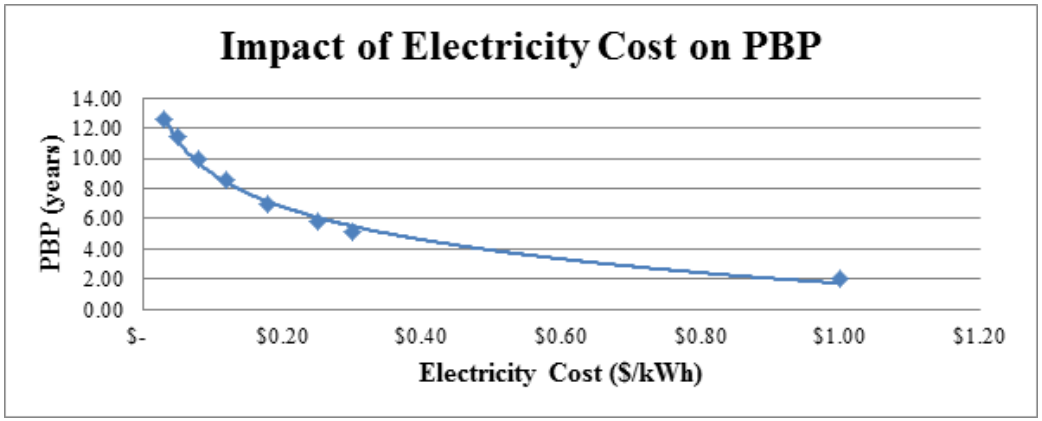

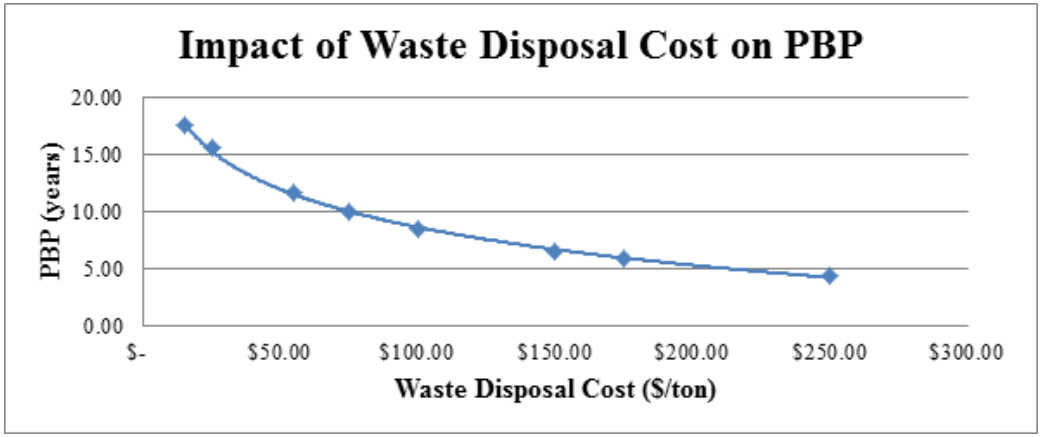

Issues/Lessons Learned

- Implementation of the demo proved to be a greater challenge than originally anticipated
- Permitting assumptions going into the program:
  - License to operate at Edwards AFB
  - Experimental exemption from California
- Permitting reality:
  - License to operate at Edwards AFB
  - Experimental exemption from Eastern Kern Air Pollution Control District (EKAPCD)
  - Generating facility interconnection agreement with Southern California Edison
  - Permit exemption from the Environmental Health Division of CalRecycle
- Key takeaways:
  - Don’t underestimate the hurdles associated with introduction of new technologies with potential environmental implications
  - Manage publicity
  - Understand all potential ramifications of site selection
  - Afford ample time for permitting

Technology Transfer

- Technology has been transferred to MSW Power Corporation
  - MSW Power is focused on the development, manufacture, and sale of products focused on adding value to waste handling processes
- Infoscitex continues to develop waste-to-energy conversion solutions in partnership with MSW Power
  - US Army-funded BWEC effort
  - SERDP-funded shredded waste gasifier effort
- Targets for technology insertion
  - DOD forward operations including large FOBs and contingency basing activities
  - Remote site generation where traditional waste footprint management is a high cost endeavor and distributed energy production poses an attractive value proposition

Publications

- No publications