FINAL REPORT

Distributed Power Systems for Sustainable Energy Resources

ESTCP Project EW-200939

OCTOBER 2012

Stella Maris Oggianu
Luis Arnedo
Vladimir Blasko
Suman Dwari
Yiqing Lin
Bob Thornton
United Technologies Research Center

This document has been cleared for public release

REPORT DOCUMENTATION PAGE

Form Approved
OMB No. 0704-0188

Public reporting burden for this collection of information is estimated to average 1 hour per response, including the time for reviewing instructions, searching existing data sources, gathering and maintaining the data needed, and completing and reviewing this collection of information. Send comments regarding this burden estimate or any other aspect of this collection of information, including suggestions for reducing this burden to Department of Defense, Washington Headquarters Services, Directorate for Information Operations and Reports (0704-0188), 1215 Jefferson Davis Highway, Suite 1204, Arlington, VA 22202-4302. Respondents should be aware that notwithstanding any other provision of law, no person shall be subject to any penalty for failing to comply with a collection of information if it does not display a currently valid OMB control number. **PLEASE DO NOT RETURN YOUR FORM TO THE ABOVE ADDRESS.**

REPORT DATE (17-10-2012))	**2. REPORT TYPE: Final report**	**3. DATES COVERED** *(From - To)* Aug 2009-August 2011
4. TITLE AND SUBTITLE		**5a. CONTRACT NUMBER** W912HQ-09-C-0055
		5b. GRANT NUMBER
		5c. PROGRAM ELEMENT NUMBER
6. AUTHOR(S) Dr. Luis Arnedo, Dr. Vladimir Blasko, Dr. Suman Dwari, Dr. Yiqing Lin, Dr. Stella Maris Oggianu,		**5d. PROJECT NUMBER** EW-200939
		5e. TASK NUMBER
		5f. WORK UNIT NUMBER
7. PERFORMING ORGANIZATION NAME(S) AND ADDRESS(ES) United Technologies Research Center 411 Silver Lane East Hartford, CT (06108)		**8. PERFORMING ORGANIZATION REPORT NUMBER** EW-200939
9. SPONSORING / MONITORING AGENCY NAME(S) AND ADDRESS(ES) USACE, Humprey Engineer Center Spt. Activity 7701 Telegraph Road Alexandria, VA, 22315-3660		**10. SPONSOR/MONITOR'S ACRONYM(S)** ESTCP
		11. SPONSOR/MONITOR'S REPORT NUMBER(S)

12. DISTRIBUTION / AVAILABILITY STATEMENT

Approved for public release. **Export Controlled: ECCN EAR 99**

Warning: The Final Project Report for W912HQ-09-C-00055 contains technical data whose export is restricted by the Bureau of Industry & Security's Export Administration Regulations and cannot be exported or re-exported without the authorization of the U.S. government. Violations of these export laws are subject to severe criminal penalties. Diversion contrary to U.S. law is prohibited.

13. SUPPLEMENTARY NOTES:

14. ABSTRACT

United Technologies Research Center (UTRC) in collaboration with the University of Wisconsin Madison (UWM), has demonstrated the key technologies that will enable scalable deployment of distributed power sources and energy storage. These key technologies have been demonstrated in such a way that the distributed power sources would appear as a single stable entity to the electrical grid. The technologies demonstrated under this project will provide the infrastructure and controls required for efficient and reliable use of renewable energy sources, representing the largest opportunity for reducing external grid utilization and the environmental impact associated with the use of non-renewable sources. Under this project, UTRC has developed energy microgrids based on Li Ion batteries and solar photovoltaic (PV) systems, and has successfully demonstrated the interoperability of multiple energy sources and storage, seamless transition between grid-parallel and grid-island operation modes enabling critical loads to continue their normal operation during external power outages, the capability to improve power quality and reduce the total harmonic distortion (THD) to levels lower than the 5% guidelines provided by IEEE1547, the capability to follow power commands from a supervisory system and to continue safe operation under the loss of communications with the supervisory system. Scalable energy management system and communications infrastructure that could significantly outperform rule-based supervisory system by as much as 20% was also part of the demonstration.

The system and all its components were developed and tested at UTRC in the UTRC Energy Conversion Laboratory. Final verification and successful demonstration of all performance objectives was achieved at McGuire AFB. This project is the foundation for the development of more ambitious and challenging goals in the energy system area, including microgrids for net-zero energy buildings, integration of advance energy storage devices such as flow battery with the grid and wind turbines, analysis of stability and subsystem interaction in microgrids systems.

15. SUBJECT TERMS : energy microgrids, distributed power systems

16. SECURITY CLASSIFICATION OF:			17. LIMITATION OF ABSTRACT	18. NUMBER OF PAGES	19a. NAME OF RESPONSIBLE PERSON
					Stella Maris Oggianu
a. REPORT	b. ABSTRACT	c. THIS PAGE			19b. TELEPHONE NUMBER *(include area code)*
UU	UU	UU	UU	103	+1-860-610-7427

Standard Form 298 (Rev. 8-98)
Prescribed by ANSI Std. Z39.18

Project Team

United Technologies Research Center

Dr. Luis Arnedo, Power Electronics Research Scientist

Dr. Vladimir Blasko, Power Electronics Fellow

Dr. Suman Dwari, Power Electronics Research Scientist

Dr. Yiqing Lin, Optimization Research Scientist

Dr. Stella Maris Oggianu, Project Leader, Energy Systems Program Office

Bob Thornton, Senior Researcher, Electrical Engineer

SungMin Park (PhD candidate, UTRC Intern, University of Connecticut)

Cliff Lamb, Technician

Alisha DaSilva, Technician

University of Wisconsin-Madison

Professor Giri Venkataramanan, Electrical and Computer Engineering

Dr. Mustafa Bayal, Postdoc student at UWM in the Power Electronics Group

Jonathan Lee, Master Student at UWM in the Power Electronics Group

Demonstration site (McGuire AFB)

Christopher Archer, Deputy Base Civil Engineer

Barry Miller and Joseph Bogdan, Resource Efficiency Managers

Ronald Reese, Energy Manager at McGuire AFB medical center

Table of Contents

1 INTRODUCTION 1

1.1 BACKGROUND 1
1.2 OBJECTIVE OF THE DEMONSTRATION 2
1.3 REGULATORY DRIVERS 2

2 TECHNOLOGY DESCRIPTION: ENERGY MICROGRIDS 3

2.1 TECHNOLOGY OVERVIEW 3
2.1.1 Overview of the system installed at Mc Guire AFB Medical Clinic 7
2.1.2 Chronological Summary of the Development of the Technology for Energy Microgrids 8
2.1.3 Expected Applications 9
2.2 TECHNOLOGY DEVELOPMENT 10
2.2.1 Components design, materials procurement and individual components test 10
2.2.2 System Integration and Testing in Lab Conditions 11
2.3 ADVANTAGES AND LIMITATIONS OF THE TECHNOLOGY 14

3 PERFORMANCE OBJECTIVES 18

3.1 QUANTITATIVE PERFORMANCE OBJECTIVES 18
3.2 QUALITATIVE PERFORMANCE OBJECTIVES 25
3.2.1 System protection and fault management 25
3.2.2 Robust integration between EMS and UCB 27
3.2.3 Ease of use 27
3.3 QUANTITATIVE PERFORMANCE OBJECTIVES (PROVED BY SIMULATION) 29
3.3.1 Decrease environmental Impact 30
3.3.2 Reduce energy consumption by external utilities 31
3.3.3 System Economics 31

4 FACILITY/SITE SELECTION: MCGUIRE AFB MEDICAL CLINIC 33

4.1 FACILITY/SITE LOCATION AND OPERATIONS 33
4.2 FACILITY / SITE CONDITIONS 33
4.2.1 Electrical Work and Modifications Required to McGuire AFB Medical Clinic 34
4.2.2 Site Related Permits and Regulations 35

5 TEST DESIGN 39

5.1 CONCEPTUAL TEST DESIGN 39
5.1.1 Data Gathering System 39
5.1.2 Instrumentation 39
5.1.3 Failure and Risk Analysis 40
5.2 BASELINE CHARACTERIZATION 41
5.3 DESIGN AND LAYOUT OF TECHNOLOGY COMPONENTS 42
5.4 OPERATIONAL TESTING 42
5.4.1 Operational Tests 42
5.4.2 Simulation Tests to quantify Environmental and Economic Microgrid and Supervisory System Performance (refer to Section 3.3) 44
5.5 SAMPLING PROTOCOL 45
5.5.1 EQUIPMENT CALIBRATION AND DATA QUALITY ISSUES 47
5.6 SAMPLING RESULTS 48

6 PERFORMANCE ASSESSMENT 51

6.1 QUANTITATIVE PERFORMACNE OBJECTIVES 51
6.1.1 Objective 1: Security of energy supply to critical loads 51
6.1.2 Objective 2: Stable integration of multiple energy sources and storage with the electrical grid 55
6.1.3 Objective 3: System robustness to loss of communications 59

6.2 PERFORMANCE ASSESSMENT OF QUALITATIVE PERFORMANCE OBJECTIVES 59
6.2.1 Objective 1: System protection and fault management 59
6.2.2 Objective 2: Robust integration between EMS and UCB 61
6.2.3 Objective 3: Ease of Use 62
6.3 QUANTITATIVE PERFORMANE OBJECTIVES (PROVED BY SIMULATION) 62
6.3.1 Objective 1: Decrease Environmental Impact 64
6.3.2 Objective 2: Reduce energy consumption by external utilities 66
6.3.3 Objective 3: System economics 66

7 COST ASSESSMENT 67

7.1 COST MODEL 67
7.2 COST DRIVERS 70
7.3 COST ANALYSIS AND COMPARISON 71
7.3.1 System economics (Quantitative performance Objective 3) 71

8 IMPLEMENTATION ISSUES 75

8.1 REGULATIONS, STANDARDS, AND PERMITS REQUIRED TO IMPLEMENT THE TECHNOLOGY 75
8.2 REQUIRED ACCESS TO INTERNET OR EXTERNAL COMMUNICATION NETWORKS AT DOD SITES 76
8.3 APPROVAL PROCESS AND ACCESS TO INFORMATION AT DOD SITES 76
8.4 ECONOMIC CHALLENGES AND LESSON LEARNED 77
8.5 TECHNICAL CHALLENGES AND LESSONS LEARNED 77
8.6 SUPERVISORY CONTROL: 78

9 REFERENCES 79

10 APPENDICES 81

10.1 APPENDIX A: POINTS OF CONTACT 81
10.2 APPENDIX B: APPROVED ELECTRICAL SYSTEM AT MCGUIRE AFB 82
10.3 APPENDIX C: START-UP AND TURN-OFF SEQUENCE 85
10.4 APPENDIX D: EQUIPMENT PRICES 86
10.5 APPENDIX E: SMART SWITCH IEEE 1547 VERIFICATION IN SIMULATION 88

List of Figures

Figure 1: UTRC Energy Microgrids Concept 4
Figure 2: Schematic diagram of the energy microgrid system and sub-system installed at McGuire AFB 7
Figure 3: Energy microgrid components installed at McGuire AFB (and their interconnection) .. 8
Figure 4: Power electronics and controls tested in UTRC-UPCs before migration to ESTCP-UPC. 10
Figure 5: System test set-up at UTRC Energy Conversion Laboratory 11
Figure 6: Control Structure 12
Figure 7: System Integration Schematics. 14
Figure 8. Microgrid demo sensors - type and location. 24
Figure 9: Flow-chart for the auto-start-up sequence 28
Figure 10: Elements involved in the start-up sequence 29
Figure 11: Mechanical and electric rooms at McGuire AFB medical clinic and microgrid demo space. 33
Figure 12. 1-line electric diagram of existing PV system at McGuire AFB medical clinic 34
Figure 13: Schematic of electrical system installed at McGuire AFB medical clinic 37
Figure 14: Schematic of energy microgrid system lay-out installed at McGuire AFB medical clinic 38
Figure 15: U.S. climate map and selected locations for microgrids benefit analysis. 42
Figure 16: Schematic of the system lay-out and communication protocols between components (in blue) 46
Figure 17: Schematic of showing communications protocols and data exchange between microgrid components 46
Figure 18: Grid Synchronization at UTRC lab 52
Figure 19: Grid Synchronization at McGuire AFB 52
Figure 20: Power flow control 53
Figure 21: Grid Disconnection and Islanding detection tested at UTRC lab 54
Figure 22: Grid disconnection and reconnection tested at McGuire AFB 54
Figure 23: Battery operation in off-Grid mode (Time scale: 5s/div). 56
Figure 24: System performance in off-grid mode under large load variation at the McGuire AFB 56
Figure 25: Voltage Harmonic distortion in off-grid mode 57
Figure 26: Harmonics regulators 58
Figure 27: System performance under large solar radiation changes 58
Figure 28: Operation of the system under loss of communication (between t_1 and t_2) and re-establishment of communication between UPC and EMS (at t_2). 60
Figure 29: Experimental results showing various instants of the auto-start-up sequence. 62
Figure 30: Annual Operating Cost 74
Figure 31: Start up sequence 85
Figure 32: Turn off Sequence 85
Figure 33: Wind turbine installed cost ($/kW) [18] 86
Figure 34: Solar PV O&M and Initial Cost ($/kW) [19] 87
Figure 35: Solar PV Installed Cost ($/kW) [19] 87
Figure 36: Typical Cost for Cogeneration Systems [17] 87

List of Tables

Table 1: Performance Objectives 20
Table 2: IEEE1547 Voltage variations guidelines 23
Table 3: IEEE1547 Frequency variation guidelines 23
Table 4: IEEE1547 Inverter Current Harmonics Performance Guidelines 23
Table 5: Instrumentation Installed at Demonstration Site 40
Table 6: Microgrid Architecture for Selected Sites 45
Table 7: Sampling protocols summary table 47
Table 8: References to Graphics and Tables illustrating project results. 48
Table 9: Summary of operational results under loss of communication condition. 60
Table 10: Summary of Software Fault Protection Tests 61
Table 11: Microgrid Architecture for Selected Sites 63
Table 12: Average annual CO2 Emission Reduction 65
Table 13: Microgrid Design for 5% CO_2 Emission Reduction by Scenario 4 65
Table 14: Annual Energy Consumption (MWh/year) 66
Table 15: Cost Model for Energy Microgrids 68
Table 18: Microgrid Architecture for Selected Sites 72
Table 16: Annual Cost Savings of Microgrid 74
Table 17: Microgrid Payback Time 74
Table 18: Initial and O&M cost rage for equipment that may be included in a Microgrid. 86

Acronyms

AC:	Alternating current
AFB:	Air Force Base
BEMS:	Building Energy Management System
BMS:	Battery Management System
DC:	Direct current
DoD:	Department of Defense
EMS:	Energy Management System (for the energy microgrid)
EO :	Executive Order
ESTCP:	Environmental Security Technology Certification Program
IC:	Initial Cost
IGBT:	Insulated gate bi-polar transistor
LCC:	Life-cycle cost
MPP:	Maximum Power Point
MPPT:	Maximum Power Point of Tracking
NPV:	Net Present Value
O&M:	Operation and Maintenance Cost
OSD:	Office of the Secretary of Defense
PV:	Photovoltaic
SCR:	Silicon-Controlled Rectifier
T&D:	Transmission and Distribution
THD:	Total Harmonic Distortion
UCB:	Universal Control Board
UPC:	Universal Power Cell (or Power Converter)
UTC:	United Technologies Corporation
UTRC:	United Technologies Research Center
UWM:	University of Wisconsin Madison

Acknowledgements

The work presented in this report was supported and funded by the U.S. Department of Defense, through the Environmental Security Technology Certification Program (ESTCP) under contract W912HQ-09-C-0055.

The authors acknowledge the support from the energy team at McGuire AFB, Christopher Archer, Deputy Base Civil Engineer, Barry Miller and Joseph Bogdan, Resource Efficiency Managers, and Ronald Reese, Energy Manager at McGuire AFB medical center.

Executive Summary

The U.S. Department of Defense (DoD) is the largest single user of energy in the U.S. [2], representing 0.8% of the total U.S. energy consumed and 78% of the energy consumed by the Federal government. Approximately 25% of DoD energy use is consumed by its buildings and facilities. The DoD currently has 316,238 buildings across 5,429 sites translating to a monetary value of > $450B [3]. The Office of the Secretary of Defense (OSD) has published an energy policy to ensure the DoD infrastructure is secure, safe, reliable and efficient [4]. The realization of this OSD energy policy, within the DoD, is being guided by (1) the Energy Policy Act of 2005, (2) Executive Order 13423, and (3) the Energy Independence and Security Act of 2007, to ensure a 30% energy reduction by 2015. The Policy Act of 2005, as well as EO 13423, has set a minimum contribution of renewable energy from DoD's installations of 5% by FY 2012 and no less than 7.5% beginning FY2013 [5].

Under the "Distributed Power Systems for Sustainable Energy" project described in this report, United Technologies Research Center (UTRC) in collaboration with the University of Wisconsin Madison (UWM), has demonstrated the key technologies that will enable scalable deployment of distributed power sources and energy storage. These key technologies have been demonstrated in such a way that the distributed power sources would appear as a single stable entity to the electrical grid. The technologies demonstrated under this project, when adopted, will provide the infrastructure and controls required for efficient and reliable use of renewable energy sources. These 'microgrids' will provide the largest opportunity for reducing external grid utilization, reducing the environmental impact associated with the use of non-renewable sources, and is an important step toward the required security of energy supply in DoD installations. Under this project, UTRC has developed energy microgrids based on Li Ion batteries and solar photovoltaic (PV) systems, and has successfully validated the performance of:

1) Universal programmable converters, smart power switches and local control relying on local sensing that allowed for demonstration of:

- interoperability of multiple energy sources and storage, required for seamless transition between grid-parallel and grid-island operation modes, enabling critical loads to continue their normal operation during external power outages.

- the capability to improve power quality and reduce the total harmonic distortion (THD) to levels lower than the 5% guidelines provided by IEEE1547.
- the capability to follow power commands from a supervisory system, and to continue safe operation under the loss of communications with the supervisory system.
- maximum power point of tracking (MPPT) algorithms that can operate faster and more reliably than the state-of-the-art algorithm.

2) A fast power switch and smart algorithms located at the common point of coupling with the main external grid. This switch is based on utility-grade reliable technology, sensing and control algorithms. The switch communicates with the UPC (Universal Power Cell, or Power Converter), enabling seamless connection and reconnection of the microgrid to the grid when a grid-outage or recovery condition is detected.

3) Scalable energy management system and communications infrastructure. The energy management system is based on a model predictive optimization engine that determines power flow set-points for each microgrid component. The function to be optimized, namely cost, can be chosen amongst several, including life cycle cost minimization, energy efficiency maximization, or tracking of utility requests relative to energy usage and power export. The economic value of the optimization-based supervisory system was compared to a rule-based approach. Results and savings depend on the energy microgrid elements considered (e.g. type and size of energy systems), energy usage, weather conditions, and price of electricity and gas. For a microgrid sized to provide 20% renewable based energy (based on typical DoD installations), the proposed optimization-based supervisory system, that considers the uncertainty in loads and weather forecasts, could significantly outperform rule-based supervisory system by as much as 20%.

The system and all its components were developed at UTRC in the UTRC Energy Conversion Laboratory, where it was fully tested before being moved to McGuire AFB medical clinic for purpose of interfacing with an 80kW solar PV system. Final verification and successful demonstration of all performance objectives was achieved at McGuire AFB. This project is the foundation for the development of more ambitious and challenging goals in the energy system area, including microgrids for net-zero energy buildings, integration of advance energy storage devices such as flow battery with the grid and wind turbines, analysis of stability and subsystem interaction in microgrids systems.

1 INTRODUCTION

1.1 BACKGROUND

In 2008, a report was published by the Defense Science Board (DSB) task force [1] detailing DoD's energy strategy and identifying the following, key DoD energy challenge:

'Military installations are almost completely dependent on a fragile and vulnerable commercial power grid, placing critical military and Homeland Defense missions at unacceptable risk of extended outage.'

The DoD is the largest single user of energy in the United States [2], representing 0.8% of the total US energy consumed and 78% of the energy consumed by the Federal government. Approximately 25% of the DoD energy use is consumed by its buildings and facilities. The DoD currently has 316,238 buildings across 5,429 sites with a monetary value >$450B [3]. The Office of the Secretary of Defense (OSD) published an energy policy to ensure that the DoD infrastructure is secure, safe, reliable and efficient [4]. The realization of this OSD energy policy, within the DoD, is being guided by (1) the Energy Policy Act of 2005, (2) Executive Order 13423, and (3) the Energy Independence and Security Act of 2007, to ensure a 30% energy reduction by 2015. The Policy Act of 2005, as well as EO 13423, has set a minimum contribution of renewable energy from DoD's installations of 5% by FY 2012 and no less than 7.5% beginning FY2013 [5]. By providing an infrastructure for efficient and reliable use of renewable sources of energy, the largest opportunities to reduce external grid utilization and also the environmental impact associated with the use of non-renewable sources can be realized.

United Technologies Research Center (UTRC), together with the University of Wisconsin Madison (UWM), is developing and demonstrating the technology needed to allow integration of renewable energy sources, and energy storage, with the grid. These technologies (1) enable introduction of dynamically stable, modular, and cost-effective energy microgrids that can operate seamlessly in grid-parallel and off-grid modes, and (2) allow DoD to meet their energy and renewable targets, as well as improve the security of supply to critical loads[1] by allowing these loads to seamlessly transition between islanding and grid-connected models.

[1] In this document critical loads refer to what is technically referred to as 'critical electrical loads' or those loads that must be supplied of electricity to avoid losing functionality. The distinction is made to avoid the word critical, that is also used for critical military missions.

1.2 OBJECTIVE OF THE DEMONSTRATION

The specific technical objectives of the demonstration were:

1) To develop power conversion and power electronics technologies that could (a) be universally used for plug&play interconnection of renewable and non-renewable energy sources and energy storage, and (b) could lead to large scale deployment of distributed power systems, fully integrated with building loads and the external grid at the building or district level.

2) To demonstrate the capability to integrate multiple energy sources together that could provide, potentially, continuous power to critical loads, while at the same time maintaining stable integration with the grid under any operating mode.

3) To develop an energy management system (EMS) that could (a) provide optimal power set-points to individual sources of energy, (b) be extended, in future stages, to multiple energy sources and storage, and (c) provide supply as well as demand response commands, integrated with both the grid and the building energy management systems (BEMS).

4) To demonstrate the value of both energy microgrids, and energy management systems, by demonstrating the capability to outperform current systems. The actual energy savings of energy microgrids depends upon its both components (type and size) and the utilities rates, however, could reach up to 100% in Net-Zero Installations, or even beyond 100% if the system can export power to the grid.

To accomplish these objectives, UTRC has installed an energy microgrid system at the McGuire Air Force Base medical clinic. The microgrid consists of a universal power converter, its control board, and an energy management system. The UTRC hardware and software manage the flow of energy from the grid, the roof mounted solar PV, and energy storage battery.

1.3 REGULATORY DRIVERS

In response to the vulnerabilities identified by the Defense Science Board Task Force on DoD Energy Strategy (ref. [6]), the President, Congress and DoD leadership have mandated many energy consumption metrics at its fixed installations. The mandates relevant to the distributed power systems and energy microgrid project include but are not limited to:

1. Installations Energy Use: Reduce by 30% by 2015 from 2003 baseline [EO 13423/ 2007 Energy Act]

2. Electricity from Renewable Sources: 25% of installation electricity by 2025 [2007 Energy Act]

3. Fossil Fuel Use in new/renovated buildings: Reduce 55% by 2010; 100% by 2030 [2007 Energy Act]

4. Hot Water in new/renovated buildings from solar power: 30% by 2015 [2007 Energy Act]

5. Renewable Electricity: use 10 year contracts to buy [FY08 NDAA]

6. Non-petroleum fuel use (ethanol, natural gas): increase by 10% annually [EO 13423/2007 Energy Act]

7. Data Collection for Energy Management

8. Create Metered Energy Benchmarking Database [2007 Energy Act]

9. Meter Electricity by Oct 2012 [2005 Energy Act]

10. Meter Natural Gas and Steam by Oct 2016 [2007 Energy Act]

2 TECHNOLOGY DESCRIPTION: ENERGY MICROGRIDS

2.1 TECHNOLOGY OVERVIEW

Under ESTCP Project # EW-200939, UTRC demonstrated the key technologies required to enable scalable deployment of distributed power sources and energy storage. These technologies were demonstrated in such a way that these power sources would appear as a single entity to the electrical grid. The 'energy microgrid' concept is illustrated in Figure 1, where multiple energy sources and energy storage elements can be used. These sources and storage are electrically wired together and present a single point of coupling with the grid. Under this project, UTRC has demonstrated its design for *universal programmable converters and local controllers*, with the *power switch* acting as a single point of coupling with the grid, and *an energy management system*. All these elements are described in the following paragraphs.

• ***Universal Power Conversion (UPC).*** Based on the nature of the different available energy sources and storage, power electronics and controls are considered as enabling technologies for utilization and penetration of this form of energy. The power conversion and control board developed at UTRC has the ability to provide AC\AC, AC\DC, DC\DC or DC\AC conversion and be optimized, and programmable, to handle any type of devices and their interoperability and integration with the external electrical grid. The UPC power structure consists of standard off-the-shelve products. The UPC can interface multiple AC and DC sources.

• ***Universal Control Board and Embedded Local Controls.*** The converters are controlled by the power electronics and control algorithms embedded in the Universal Control board (UCB). The UCB comprises powerful microprocessors that enable implementation of sophisticated algorithms to provide high quality voltage and current waveforms, reduction of losses in converters, reliable operation and reconfiguration for implementing different functions and for

future expansions. The UCB has an interface to personal computers for data monitoring, parameter changes and adjustments, software upgrade and enhancements, and could have an interface to external controller(s).

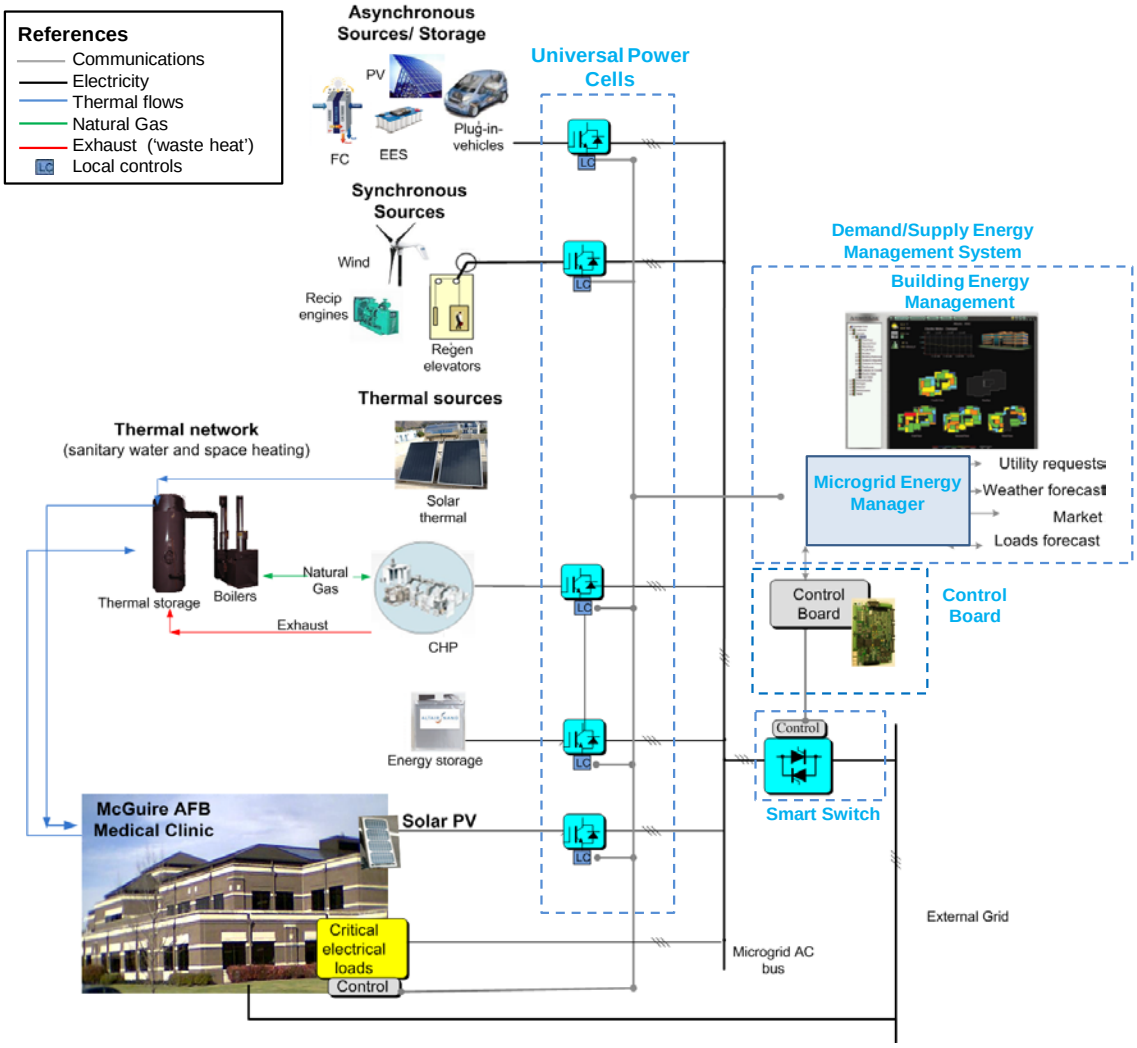

Figure 1: UTRC Energy Microgrids Concept

For the demo at McGuire AFB medical clinic, the local controls on the source side of the UPC provided maximum power point tracking (MPPT) for the solar PV system, interleaving configuration and operation of the LiIon battery system. These controls can be easily extended to include other interfacing sources like fuel cells, wind turbines or any other energy source or storage.

On the grid side, the local control algorithms implemented on the UPC provide instantaneous power management, dynamic stability with the external grid, improved power

quality, and seamless transition between off-grid and grid-parallel operations. The local controls provide phase angle/position and magnitude of line voltage vectors. Control of the inverter's frequency dynamically maintains the power angle, and flow of the real power. To ensure appropriate loading of real and reactive power from each of the devices, the inverter recognizes load changes without communication and provides appropriate power sharing for parallel units. The control of inverters, used to supply power to an AC system in a distributed environment, is based on local information available at the inverter. Fast current and voltage control loops, and the fault management system, provide the capability to ride through sags and swells of the grid voltage without disruption of operation before the smart power switch disconnections from main grid.

• ***Energy Management System.*** The energy management system optimally schedules power flow between energy sources and storage based on operational and lifecycle metrics (e.g. energy, cost, and emissions), customer preferences, and operational constraints associated with the microgrid components. Equipment operational constraints are included to capture limits of operation, safety, and measures to increase the lifetime of the various components. Advantages of the energy management system include: lower operational cost, increased energy efficiency, lower emission of greenhouse gases, and improved lifetime. The objective function associated with the energy management controller, is based on customer preferences, and is flexibility in its ability to selection between multiple pre-defined objective functions. For the proposed electrical microgrid, the energy management system determines and communicates reference points to electrical sources and storage, deciding directions and levels of power per unit. These references are communicated to the local controllers in the time-frame of several minutes to an hour. Smart switch monitoring and measurements communicated by the local controllers allow the energy management system to infer whether the system is in grid connected or grid parallel mode of operation and suitably modify its objective function and constraints.

The UTRC energy management system is based on stochastic, non-linear programming with a receding horizon formulation. Optimal inputs, at the current time period, are obtained by solving (exact / approximation) a finite-horizon optimization problem. Parts of the optimal inputs are implemented and the procedure is repeated for future time-periods.

For the ESTP-energy microgrid demo at McGuire AFB medical clinic, UTRC has developed models of microgrid components (solar PV and LiIon battery) and has developed methodologies tailored towards real-time implementation.

While the energy management control activity for the proposed microgrid project at McGuire AFB was focused solely on the electrical energy flow of a solar PV and a battery, it is currently being extended to (i) incorporate multiple energy sources and storage, (ii) provide optimal management of thermal energy and building loads, (iii) interface with utilities, and (iv) participate in energy markets. The proposed energy management controller is flexible and expandable, and components can be easily added and removed. In addition, UTRC has demonstrated that such an approach can be made compatible with existing Building Energy Management Systems (BEMS), such as WebCtr (TM), owned by Automatic Logic Corporation (ALC, a UTC owned company). WebCtrl is a BEMS that is currently used in many buildings within the United Stated to monitor and control building performance.

• ***Communications.*** The proposed microgrid architecture separates communications for instantaneous power management from that of energy management, based on the different requirements on communications latencies. Instantaneous power management relies on local measurements, ensures appropriate loading of real and reactive power from each of the devices, and enables a 'plug and play' modular approach for the incorporation of new devices into the microgrid. Instantaneous power management requires communications speed on the order of milliseconds. For energy management, the required response time for communications between microgrid components and utilities, with the supervisory system, is on the order of seconds to minutes.

• ***Smart Switch.*** The static switch, which consists of three pairs of anti-parallel SCRs, enables seamless transfer of energy from the power grid or distributed generator to the loads, in order to avoid service interruption upon a deficiency in power quality. In addition to the SCRs, there is a 3-phase snubber circuit. For the SCRs, a high rate-of-rise voltage, or dV/dt, occurs when they cease conduction or gate into conduction. High peak voltage is produced when an inductive circuit connected to the SCRs is interrupted. The purpose of the resistor/capacitor in the snubber board is to limit dV/dt and Metal-Oxide-Varistor (MOV) limits peak voltage. The most important function of the static switch is reclosing upon restoration of normal grid conditions. A synchronization check relay is used for this purpose. It monitors instantaneous voltages across

the SCRs. When the difference between the two is less than a specified percentage of the nominal voltage level, the output gives a logic signal to the SCR firing board, which then simultaneously triggers the 3 phase SCRs. By using a static switch, power quality problems become transparent to the vulnerable customer loads. Another key characteristic of the static switch is the speed of operation since it identifies duration of power discontinuity/interruption for the sensitive load.

2.1.1 Overview of the system installed at Mc Guire AFB Medical Clinic

Figure 2 shows the microgrid concept that was demonstrated at McGuire AFB medical clinic using an existing solar PV array as the energy source. An energy storage system was provided by UTRC. The building critical loads were represented by a load bank (to minimize risks during the demonstration).

The solar PV and the battery were electrically wired together. They presented a single point of coupling with the building AC bus through the smart switch. An electrical contractor provided the electrical work required to change from the existing commercial solar PV installation to the proposed microgrid demo installation. The electrical installation was achieved in such a way that the solar PV system could be easily restored to its current commercial installation once the demonstration was finalized. Mechanical work, comprising a ventilation system for the battery systems was performed as a redundant safety system.

Details relative to siting, electrical wiring and mechanical piping are given in Section 3.

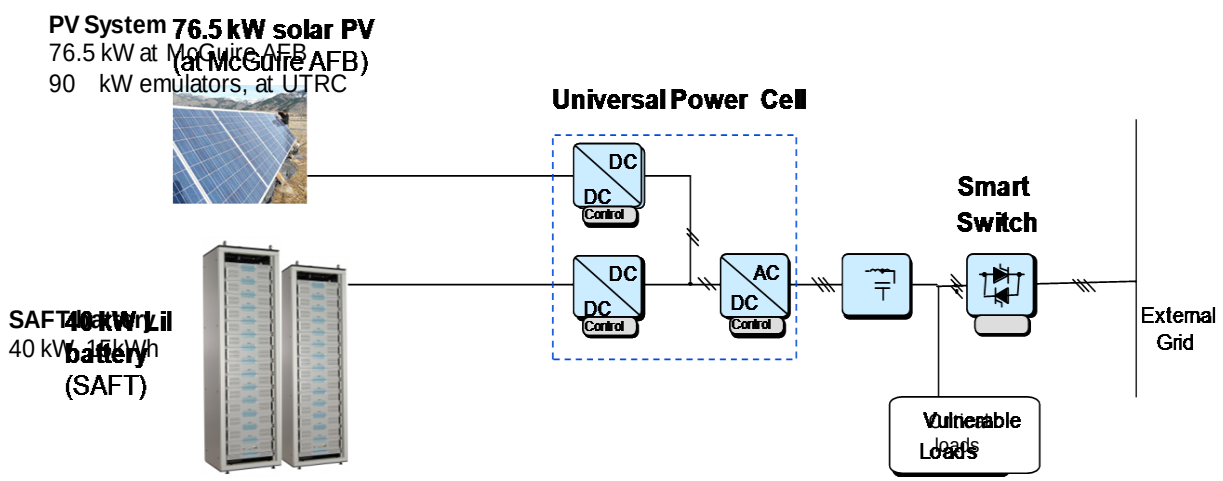

Figure 2: Schematic diagram of the energy microgrid system and sub-system installed at McGuire AFB

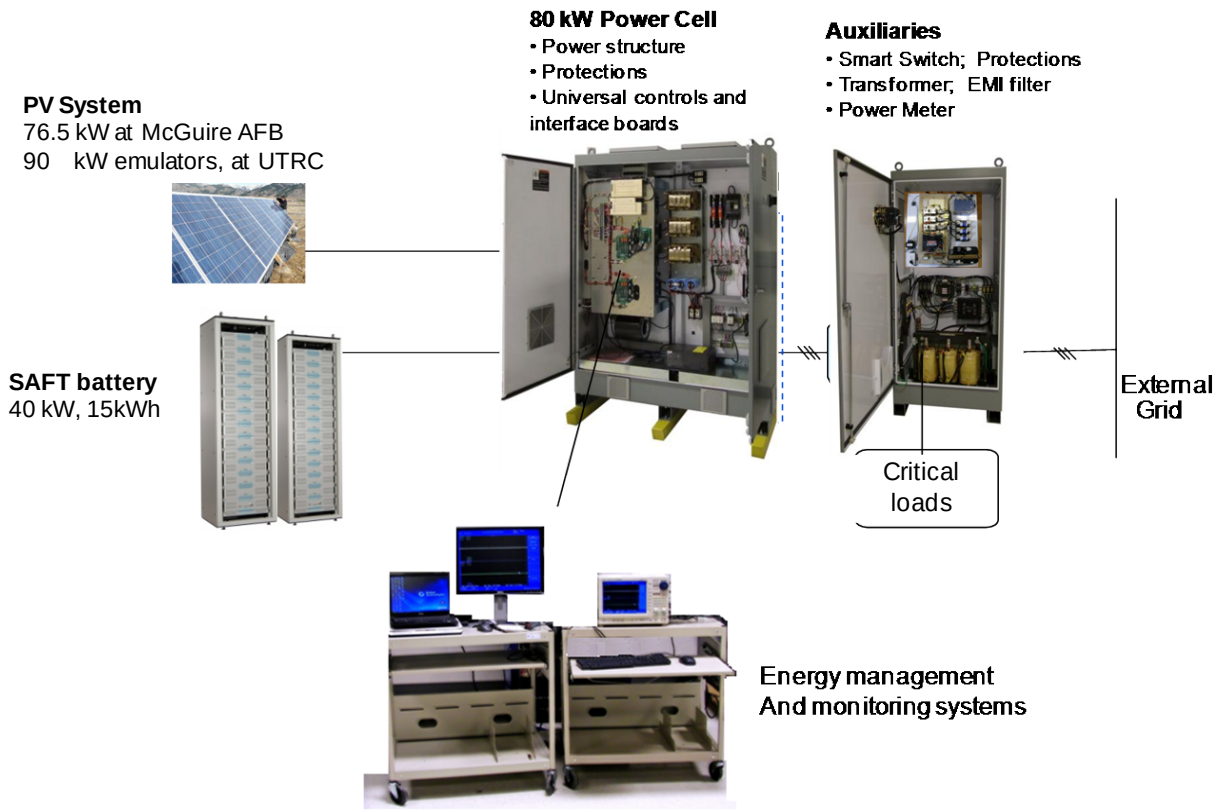

Figure 3: Energy microgrid components installed at McGuire AFB (and their interconnection)

2.1.2 Chronological Summary of the Development of the Technology for Energy Microgrids

The idea of distributed power systems as opposed to centralized systems is not new; it has been an accepted paradigm from the inception of the electrification infrastructure in the early 1900s. However, over the last twenty years, the increasing concern for security over the energy supply and for the environment, especially in light of an aging transmission and distribution (T&D) infrastructure, has been the main driver to explore once again renewable based distributed energy sources.

The technologies for energy microgrids that enable distributed energy resources to transition seamlessly in grid parallel and grid islanding modes have been a topic of exploration for at least 10 years. In the U.S, the Consortium for Electric Reliable Technology Solutions (CERTS) was established in 1998 with the following mission: *"To research, develop, and disseminate new methods, tools, and technologies to protect and enhance the reliability of the U.S. electric power system under the emerging competitive electricity market structure"*. The University of Wisconsin Madison has been the CERTS lead University and is he owner of at

least three patents related to the control of microgrids and integration with the external utility grid [[7] , [8] , [9]]. These patents were filed between 2003 and 2007.

In 2007, UTRC began developing its own energy microgrid technologies. From 2007 to 2009, UTRC invested in the creation of two new laboratories to support the research of power electronics and distributed power systems. In 2009, UTRC developed the power conversion and controls technology for universal use in any energy storage and energy source. UTRC also set up the approach for microgrid energy management system in connection with the building management system. The ESTCP-funded microgrid project described above allowed UTRC to be one of the first companies in the world to develop and demonstrate energy microgrid technologies in a real building set up, integrated with energy sources and storage, and with the external grid.

2.1.3 Expected Applications

The technology that has been developed under the 'Distributed Power Systems for Sustainable Energy' project is expected to be applied in every system comprising multiple energy storage and sources in connection with the grid or building systems. The design of the UPC, the control algorithms, and the supervisory system was developed and demonstrated under this contract in such a way that it allows power conversion integration with the external grid and coordination between any energy source (e.g. solar PV, wind turbines, diesel gen-sets, etc.) or any type of energy storage (e.g. supercapacitors, batteries, flow-batteries, etc.).

Energy microgrids are expected to be used in large buildings, campuses or communities requiring additional security over energy supply and/or a certain percentage of renewable resources. At present, many buildings and campuses have diesel generators and UPC systems that provide security of supply. Diesel generators do not provide seamless transitions of energy to vulnerable (critical) buildings loads. UPC systems, however, do provide the seamless transitions needed for those loads requiring additional power quality and/or uninterrupted power to certain systems (e.g., data-centers). UPC systems are charged from the external grid. During a power outage, UPC systems supply energy for a limited time proportional to their capacity. In the case of energy microgrids, batteries can be continually charged from renewable resources as well as from the external grid, providing an additional layer of energy security. There are many buildings today already using renewable resources, specifically that of solar PV. However, these systems can only work islanding or grid connected and without interconnection with other

resources. In the case of the proposed microgrids approach, the local control algorithms allow multiple energy sources to work in coordination, without the need to communicate with each other. The technology developed by UTRC allows seamless transition between grid-connected and grid disconnected modes.

2.2 TECHNOLOGY DEVELOPMENT

This section presents a description of the design and testing activities conducted at UTRC. Field testing completed at McGuire AFB is described in Section 5. In particular, Section 5.4 provides a description of the operational testing in the field.

2.2.1 Components design, materials procurement and individual components test

From the project inception in 2009 until December 2010, UTRC was focused on the project preparation tasks enabling system-level energy microgrids integration and testing. UTRC energy systems modeling and simulation capability was used to design the specific parts of the 80kW universal power converter tested at McGuire AFB, including the power stage, the filtering, and all protection and charging circuits. Semikron (www.semikron.com, inverter company) was subcontracted by UTRC to set-up and test the inverter. UTRC also developed all the controls methodologies for a) the Dc-Dc input side of the converter, and b) integration with the grid on the AC side. The design was achieved using models and simulations and verified using the 50kW UPC available in the UTRC Energy Conversion Laboratory (see Figure 4). The overview and description of the main control algorithms is reported. [11] After verification of all algorithms, thee controls loops were implemented and tested in the 80kW power conversion system sent to McGuire AFB. Note: References [10] and [11] are been sent alongside with this report.

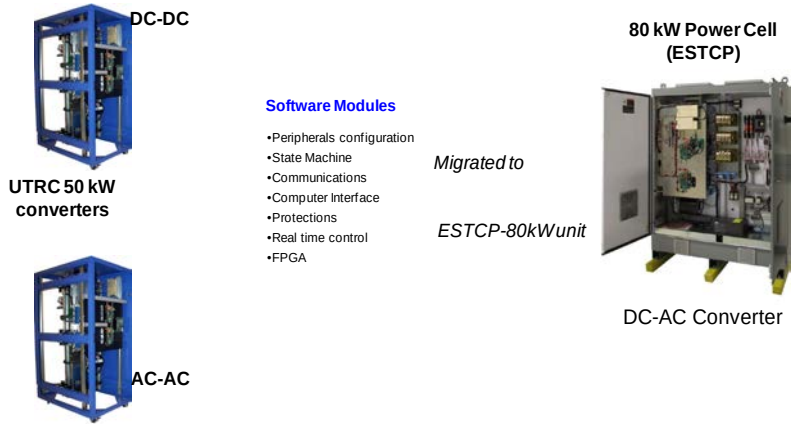

Figure 4: Power electronics and controls tested in UTRC-UPCs before migration to ESTCP-UPC.

In parallel to the above effort, UWM developed the power switch design, assembly and testing. After designing all the components and assembling the switch system, the power switch was assembled at the UWM energy microgrids laboratory in order to verify results compared with IEEE 1547. The report provided by UWM has been included as part of Appendix E: Smart Switch Verification in Simulation. In addition to the above, UTRC completed a modeling framework for the supervisory system. A complete description of the selected methodology has been submitted for publication. [10] It was designed with the following objectives: (a) to provide power to critical load, (b) to maintain an optimal battery state of charge (SOC), (c) to meet frequency and voltage THD standards, and (d) to use when grid connected power may be exported or imported, depending on if there is an excess or deficit of PV generated power.

2.2.2 System Integration and Testing in Lab Conditions

The system was integrated at UTRC Lab, including hardware and software development and integration. These tasks are explained in the next sections.

2.2.2.1 Hardware (physical) integration

Communications and power interfaces between the UPC, solar PV emulators, the LiIon battery, the power switch, the critical load (emulated by a 50kW resistive load bank), the transformers, and the filters were established and tested. Graphical representations of the communications interfaces are shown later in this report (see Figure 16 and Figure 17). A photograph of the integrated system in the Power Electronics Lab is shown in Figure 5.

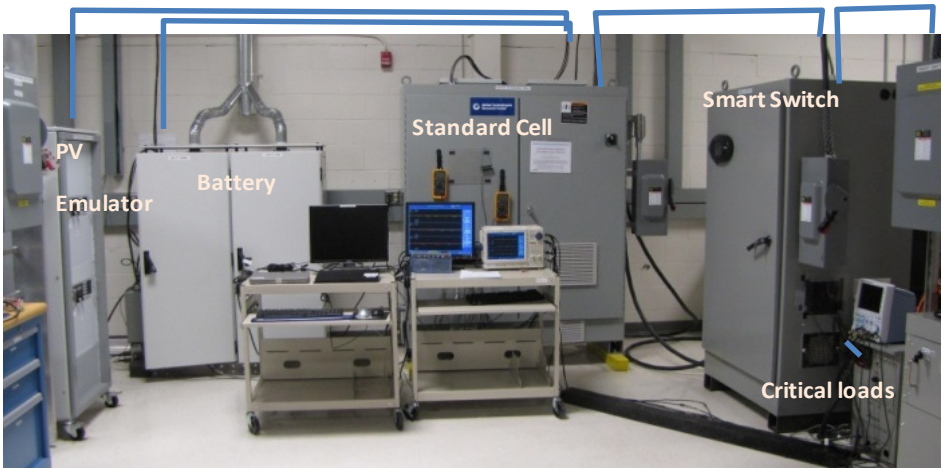

Figure 5: System test set-up at UTRC Energy Conversion Laboratory.

2.2.2.2 Software development and integration

All component testing and integration tasks were finalized at the UTRC Energy Conversion Laboratory in February 2011. After completion of this milestone, system-level/energy-microgrid enabling control algorithms were integrated (i.e. embedded controls) and tested. These control algorithms allowed seamless transition between alternative sources of energy and the external electrical grid and were embedded in the control boards. Figure 6 shows all levels of control strategy implemented and tested in the system to ensure safe operation while providing power to the critical loads in all operating conditions.

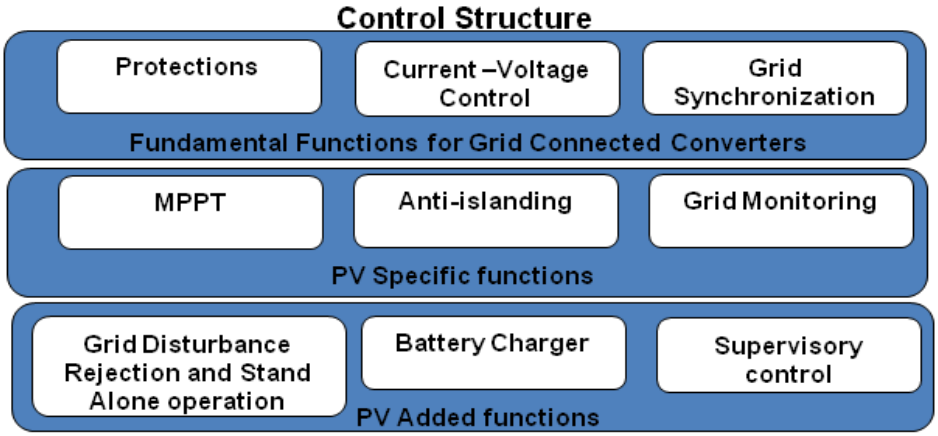

Figure 6: Control Structure

Protections: Three levels of protection were implemented and tested, providing warnings and faults. Protection schemes included: over-temperature of the battery and IGBT modules; over- and under-voltage; and current at the inputs and output of the converter.

Current-Voltage Control: The microgrid system must support critical loads and provide seamless transition between two modes of operation - grid connected and grid disconnected. The grid-forming inverter must satisfy standalone operation by controlling voltage and frequency at the inverter output terminals. In the basic control scheme of the three-phase grid forming-inverter, currents and voltages are transformed to the d-q reference frame, and a cascaded inner current-loop and outer voltage loop is used to control the inverter output voltage. A description of the controls strategy used for Current-Voltage controls is provided in ref. [11] .

Grid Disturbance Rejection and Stand-Alone Operation: By using the static switch, power quality problems become transparent to the critical loads. This is because, in the case of a large grid disturbance, the smart switch will produce intentional islanding until grid conditions return to normal. To ensure that the smaller grid disturbances, such as unbalance and or harmonics, are not feed back to the control through the instantaneous power calculation block, the fundamental component for current and voltage is used. This work uses a complex band-pass filter tailored for microgrid application.

Grid Monitoring and Grid Synchronization: The system connects to the grid using a smart switch. The most important functions of the static switch include grid synchronization and monitoring. IEEE 1547 guidelines are used to determine the severity of the disturbance (see Table 2, Table 3
Table 4 for details).

Anti-Islanding: Anti-islanding control methods are a huge area of research for microgrids. They (a) protect the systems against unwanted or uncontrolled islanding and (b) detect power outages on the external grid side, ensuring the microgrid will be disconnected after a power outage occurs. An active anti-islanding algorithm was implemented and thoroughly tested as part of this project. Results obtained show the microgrid system to be successful in detecting a power outage and disconnecting the microgrid from the external electrical grid, independent of the initial conditions.

Battery Charger: A module that safely charges and discharges the battery, according to the supervisory system set-points and protection schemes, has been implemented and embedded in the DSP controller.

Maximum Power Point of Tracking (MPPT): Ther are two key requirements for control over the photovoltaic (PV) energy conversion systems. They are: (1) the ability to achieve very fast, yet quite accurate, tracking of the maximum power point under rapidly changing environmental conditions and (2) the ability to obtain efficient unperturbed tracking operation under steady environmental conditions. Advanced Maximum Power Point Tracking (MPPT) methods techniques were used to achieve higher performances and faster tracking of the maximum power while causing minimum transients in the photovoltaic system. Variable step-sized methods were used to obtain such fast and stable response, with a very high accuracy of less than 0.25% error from the actual maximum power.

Supervisory system: An optimization-based supervisory control of microgrids was implemented, integrating decision-making, forecasting, state-estimation and model prediction. This supervisory control takes into consideration receding horizon optimization formulations that also deal with uncertainty in load as well as renewable energy profiles by using stochastic programming tools and methods. The supervisory system receives, as input, measured power levels for all microgrid components and the state-of-charge battery system, and sends power command set-points back to the universal control board. In this version of the system, the exchange of information is achieved by exchanging files through a software tool developed specifically for this purpose, called the Real-Time Interface (RTI) tool.

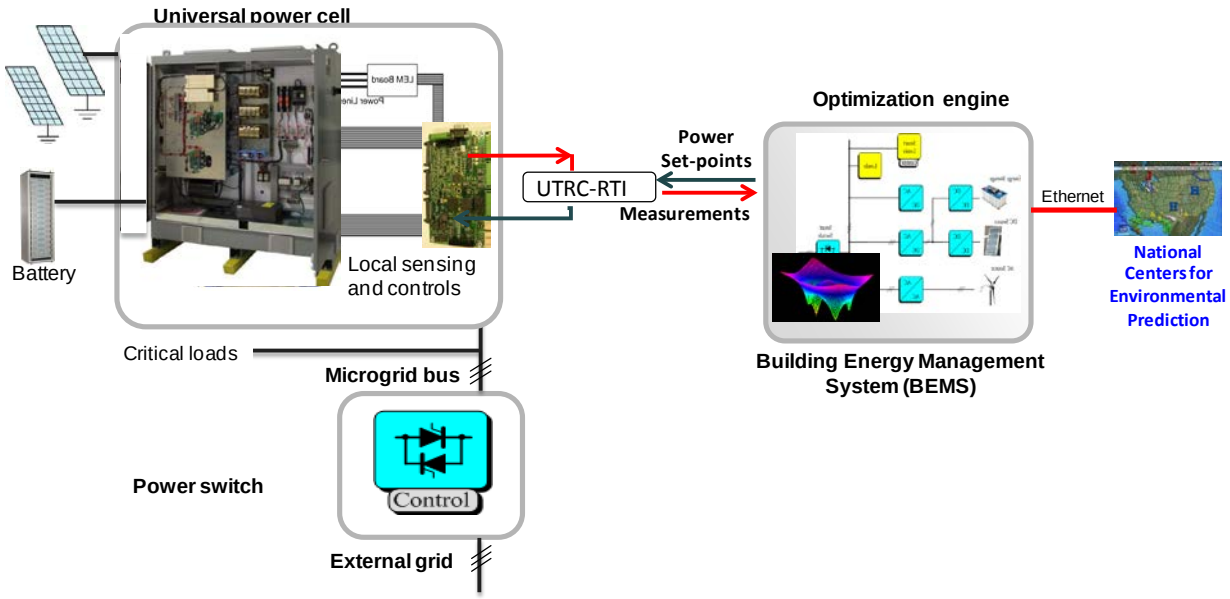

Figure 7: System Integration Schematics.

2.3 ADVANTAGES and LIMITATIONS OF THE TECHNOLOGY

The energy microgrid systems tested under this program enable adoption of renewable-based "smart-grids" through:

1. Security of supply: Dynamically stable, renewable-based microgrids capable of seamless transition between grid-parallel and off-grid operations, reducing facility vulnerability to grid instability.
2. Improved power quality: Robust operation of the microgrid to voltage sags and swells on the main electrical grid.

3. Utilization of renewable sources: Efficient and cost-effective integration of renewable energy sources and storage within the grid.
4. Utilization of waste heat: Waste heat utilization for dispatchable power sources, resulting in 85-90% fuel utilization versus 40-50% for central power generation.
5. Reduced energy cost: Optimized operation with energy management system, on top of local controllers. Reduced energy bill at the select customer site.
6. Energy savings and improved energy efficiency: Energy sharing algorithms between sources, such as solar or wind; energy storage elements to mitigate uncertainty and randomness in energy generation; and smooth power flow.
7. Extensibility of the technology to include supply and demand management, integration with BEMS, and energy markets with utilities request and incentives.
8. Scalability of technology to larger sites and operation of the energy management system to control microgrids clusters within multiple sites.
9. Decrease in transmission and distribution losses and in transmission infrastructure requirements (e.g., by distributed power systems vs. centralized generation)
10. Plug-and-play operation of the system without communications between individual sources, allowing for modular addition of other energy storage and sources to the grid.
11. Reconfigurable, universal power conversion unit able to interface with (i) DC sources, such as PV and fuel cells, (ii) AC sources, such as wind turbines and gensets, (iii) loads, and (iv) energy storage.

Limitations of the energy microgrid technology include:

- Initial cost: Energy microgrids rely on distributed generation of energy. Deploying environmentally friendly microgrids requires significant capital investment in state-of-the-art cogeneration technologies, renewable sources, energy storage, and interconnection hardware and software. It is expected, however, that economics of scale, technology breakthroughs, and natural learning curves will reduce the economic limitation of microgrid deployments.
- Readiness of new technologies. New renewable energy sources are either inefficient, require high initial investment, and/or present long payback periods. Energy storage technologies present special challenges and opportunities. Available energy storage

technologies are not well-suited for large-scale energy microgrids. For example: LiIon technologies are being tested for automotive applications, although they are being currently used in microgrid demos and their energy and power capacity may not be well suited to support building or campus-scale microgrids. This is because new thermal and electrical energy storage devices, having both high-density energy and power capabilities, are required.

- Energy savings, environmental benefits and the time during which the microgrid can serve critical loads, in the case of a power outage, vary depending on the selection of microgrid architecture. The economic and environmental benefits of energy microgrids, the power quality and the autonomy time of the system depend on the type and size of microgrid devices and their interconnection. The optimum microgrid architecture depends on the selected performance objectives and the site-specific requirements and constraints, as well as the site location, weather, and consumption patterns. These factors change over the life of the energy microgrid.
- Tradeoffs between vulnerabilities and initial cost: There are elements of the energy microgrid that are more vulnerable to intentional and non-intentional attacks. For example, the power switch; the selected power switch is built using utility grade components with very small probabilities of failure. However, a switch failure means the microgrid will not operate. If the microgrid cannot operate, it cannot provide power to critical loads in the case of a power outage. Hence, the consequence of an intentional or unintentional power switch failure is high because of its direct impact to the security of the energy supply. In a real environment, the vulnerable pieces of equipment should be located in a secure site of restricted access, and/or should be made redundant.
- Electrical and thermal reconfigurations for retrofit applications: Most existing buildings do not have separate electrical wiring for vulnerable and non-critical loads[2]. These separate circuits are a requirement to taking full advantage of the security-of-supply capability of energy microgrids. A building energy management system and sub-metering are also required to take full advantage of the potential benefits of smart grids and microgrids. Many existing buildings do not have sub-metering.

[2] In this document critical loads refer to what is technically referred to as 'critical electrical loads' or those loads that must be supplied of electricity to avoid losing functionality. The distinction is made to avoid the word "critical" used for critical military missions.

Limitations specific to the demo being tested by UTRC, at McGuire AFB, include:

- Reduced number of components. Only a solar PV energy source and LiIon energy storage are represented. The configuration that was demonstrated allows for (i) demonstration of power quality, (ii) seamless transition between different operating modes, and (iii) security of energy supply to critical loads. However, the economic and environmental potential of energy microgrids was demonstrated by exercising models and simulations.
- Microgrid capacity is lower than total building loads. The microgrid has a total 80kW capacity, which is, at best, ~10% of the medical building peak load. That power, however, may be enough to cover critical loads in the future (currently, critical loads are emulated by resistive load banks).
- Vulnerable building loads, emulated by a resistive load bank to protect the integrity of the building.
- Not unattended operations. For security reasons, the demonstration needs to be supervised by UTRC engineers and scientists at all times.
- Lack of Internet connection at DoD installations. This constraint limits the EMS capability to gather real-time information about weather.
- Lack of building loads information. Demonstration with actual building loads is not required, given that the capacity of the microgrid is always a small fraction of the power that is required by the building. Moreover, the focus of this demonstration is on supply optimization. Demand and supply optimization is out of scope on this project.

3 PERFORMANCE OBJECTIVES

Table 1 (pages 19-21) provides a summary of the specific objectives and metrics, as well as the measured and simulated data used to compute the metric and success criteria for demonstrating the key enabling technologies to the Renewable-based Distributed Power Systems.

3.1 Quantitative Performance Objectives

3.1.1. Security of energy supply to critical loads.

This performance objective ensures that critical loads operate seamlessly under all operating conditions, and during extended periods of time after a power outage (depending on the type and capacity of resources). The following objectives support compliance with the main performance objective of securing energy supply to critical loads:

- Provide power to critical loads, under all operating conditions and seamlessly during transitions.
- Maintain an optimal battery state of charge (SOC). Under normal conditions, SOC determination is based on local measurement, loads, and weather forecast data processed by a supervisory control system; however, if no solar PV is available and the only source of power is the battery, the battery will be discharge to support the first, and main, objective.
- Meet frequency and voltage THD standards. This objective is related to the quality of supply to critical loads, while grid-connected. In the case of large grid frequency or voltage, the system may decide to create intentional islanding
- Import of export power to the grid, depending if there is an excess or deficit of PV generation.

During testing at both UTRC and the demo site, power outages were emulated by a disconnect switch. As a result, (1) the energy microgrid system detects the power outage, (2) the smart switch opens within ½ cycle after detection of the outage, and (3) the microgrid system continues providing seamlessly to the critical loads (emulated by a resistive load bank).

Summary of results. Successful connection and disconnection of the microgrid to the grid was observed in all cases tested at UTRC lab and at McGuire AFB. No significant voltage disturbances were observed during the transients, providing seamless power to the critical loads. The MPPT algorithms ensure maximum delivery of power from the solar PV to the loads, and the remaining was delivered to the battery until the maximum SOC (90%) was reached.

Whenever the solar PV was not available, the battery provided power to the loads until its minimum SOC (10%), after which the full system safely and automatically shut-down.
In all cases, the measured voltage and current harmonic distortion was lower than the 5% guidelines provided by IEEE1547.

The disconnection and re-synchronization process, as well as the experimental results obtained at the UTRC lab and at McGuire AFB, are shown and will be discussed later in Section 6.

Table 1: Performance Objectives

Performance Objective	Metric	Data Requirements	Success Criteria	Results
Quantitative Performance Objectives[3]				
1. Security of energy supply to critical loads (Availability of power to critical loads during transitions)	Seamless transition between grid parallel and islanding operation mode at the critical load (under all operating conditions; disconnect/ reconnect).	- Smart switch status - V, I at the output of the converter -V, I to critical loads -V, I from solar PV and from battery	- Emulated critical loads operation before, after and during an emulated power outage for a given minimum period of time allowed (at McGuireAFB demo: 15kWh/40kW *1/2~ 11.2 min.)	- Seamless transition was demonstrated between grid connected and grid islanding modes. The loads continued operating seamlessly under all operating conditions* and during transitions. - Operating conditions ranged from limited or non-solar PV available, to full PV power. The system continued operating whenever the SOC of the battery was above a minimum limit (20%)
2. Stable integration of multiple energy sources and storage with the electrical grid.	Grid synchronization Grid voltage Current harmonics Frequency deviation.	- V, I at the output of the converter - V,I at loads	- Power quality within ranges provided by IEEE1547	Experimental results indicate that even at the most critical situation - no load-there was a 2.5% voltage distortion. As the load increases distortion becomes less than 1% (compared to the <5% required by IEE1547).
3. System robustness to loss of communications (one of the enablers of plug&play	Continuous reliable operation when communications between energy manager and control board fails.	-Power levels (PV, battery, at converter output, at loads) -Default power set-points -Power set-points from	System continues operating at all times during communications errors between EMS and UCB.	When the loss of communication of the EMS was sensed in the local controller, the power flows in the microgrid is wasdecided locally based on rule based approach and power balance criterion. The critical load was

[3] All quantitative results are based on field data obtained at McGuire AFB .

capability)		energy management system		successfully powered by the UPC in the event of communication loss with supervisory controller.
Qualitative Performance Objectives[4]				
1. System protection and fault management.	System shuts-down / ride through under pre-defined conditions	V, I at output of the converter	System operates according to safety procedures design intent (refer to section 3.2.1. for safety procedures)	All the protections in the microgrid system were thoroughly tested and passed the tests. The results under all the different fault conditions are provided in Table 10.
2. Robust integration between EMS and UCB	Power levels set-points provided by supervisory system to converter controller (islanding and grid-connected)	-V, I at battery and solar PV -V, I from grid - Power set-points	System power levels follows set-points provided by the EMS (if safe operation is verified)	Microgrid system follows set-points established by the EMS except when the commands are out of acceptable bounds; demonstrating the robust integration between EMS and UCB.
3. Ease of use	Ease of use by facility managers	Facility managers survey	The long-term target is that facility managers can easily operate the microgrid (without intervention) and visualize results from supervisory system, supporting the decision-making process. However, the demo at McGuire AFB is supervised.	NA: The demo at Mc Guire AFB was supervised under all circumstances. The system requires certification before being operated by facility managers.
Quantitative Performance Objectives (proved by simulation)[5]				
1. Decrease environmental Impact (directly related to increase	CO_2 release avoided (in kg CO_2 / unit time)	- Loads - System output power - CO_2 /kWh for the	Impact larger than 30% (in CO_2 released) improvement compared with grid-only supply (this metric is strongly dependent on components	Result shows that compared with the grid only baseline, the CO2 reduction under optimization-based control strategy is between 30-40% as shown

[4] All qualitative results on this section of the table results are based on field data obtained at McGuire AFB, except for the 'ease of us' performance metric.
[5] All quantitative results are based on field data obtained by using models and simulations.

renewable usage in the microgrid system)		grid and the microgrid elements	selection and sizing, and could reach net zero). Demonstrated through simulations in alternative DoD locations) For a give energy microgrid components selection, the EMS would provide substantial savings (>5%) compared to rule-based operation.	in Table 12.
2. Reduce energy consumption from external utilities	Average energy saved (electricity and gas, in kWh / ft^2 per unit time)	- Loads information - System output power -Weather information (e.g. solar radiation)	Impact larger than 30% (in kWh/ft^2) improvement compared with grid-only supply (this metric is strongly dependent on components selection and sizing, and could reach net zero). Demonstrated through simulations in alternative DoD locations) For a give energy microgrid components selection, the EMS would provide substantial savings (>5%) compared to rule-based operation.	Results were obtained based on the constraint that renewable sources should contribute to at least 30% of total energy consumption. In those cases, the resulting renewable fraction is about the targeted 30%. The reason that the fractions are not much higher than the target 30% is due to the fact that renewable sources are still not cost-effective. Therefore, increasing the fraction of renewable sources may significantly increase the installed cost, thus reducing net savings of the microgrid system.
3. System Economics	Average energy cost saved over lifetime of equipment ($ / kWh)	- Loads information - System output power - Utility rates	ROI, lifetime, payback for sample microgrid architectures, estimated using NIST BLCC5.	Results are location dependant, an also dependent on the assumed microgrid architecture. Table 17 shows the percentage savings introduced by energy microgrids having a minimum of 30% renewable resources. With an optimization bases supervisory system, the annual utility savings could range from 56 to 61%.

3.1.2 Stable integration of multiple energy sources and storage with the electrical grid

This performance objective provides a measure of system robustness and stability. The microgrid system presented in this project was designed for stability. The battery and solar PV are integrated using a back-to-back connected dc-dc converters and a dc-ac inverter, which share a common dc-link bus. A large value capacitor is used to realize the common dc-link bus, such that a stable energy buffer can be realized for combining the various powers. The bandwidths of the controllers for (a) the dc-dc converters, (b) interfacing the energy storage with the energy source, and (c) the controller for the dc-ac inverter are designed to be very high. The high band-width of the controller ensures very stable operation of the system in the presence of external disturbances. Furthermore, appropriate advanced control algorithms were developed to achieve stable operation of the system under grid disturbances, such as grid harmonics and voltage unbalance. These algorithms were designed to follow the voltage and frequency variations guidelines provided by IEEE1547 and presented in Table 2 and Table 3, and to meet the total harmonic distortion guidelines given in

Table 4. Appropriate sampling techniques are used to achieve stable operation of the dc-dc converters under any load conditions.

Table 2: IEEE1547 Voltage variations guidelines

IEEE 1547	
Voltage Range (%)	Disconnection Time (s)
V<50	0.16
50≤V<88	2.0
110≤V<120	1.0
V<120	0.16

Table 3: IEEE1547 Frequency variation guidelines

IEEE 1547-2003	
Frequency range (Hz)	Disconnection time (s)
f<59.3 or f>60.5	0.16

Table 4: IEEE1547 Inverter Current Harmonics Performance Guidelines

IEEE 1547 and IEC 61727						
Individual harmonic	h < 11	11≤h<17	17≤h<23	23≤h<35	35≤h	THD %

%	4.0	2.0	1.5	0.6	0.3	5

Summary of results: The experimental results to be shown in detail later Section 6 indicate that the measured voltage harmonic distortion of the system was a 2.6% under a no-load condition. As the load increases, distortion becomes less than 1%. These metrics are lower than the required by IEEE1547, as shown in Table 2. The power switch performance was successfully verified against the voltage and frequency variations guidelines provided by IEEE1547 (Tables 2 and 3). This verification was carried on at UWM labs, and successfully complies with all connection and disconnection times required by IEEE. The report provided by the UWM has been included as Appendix E: Smart Switch Verification.

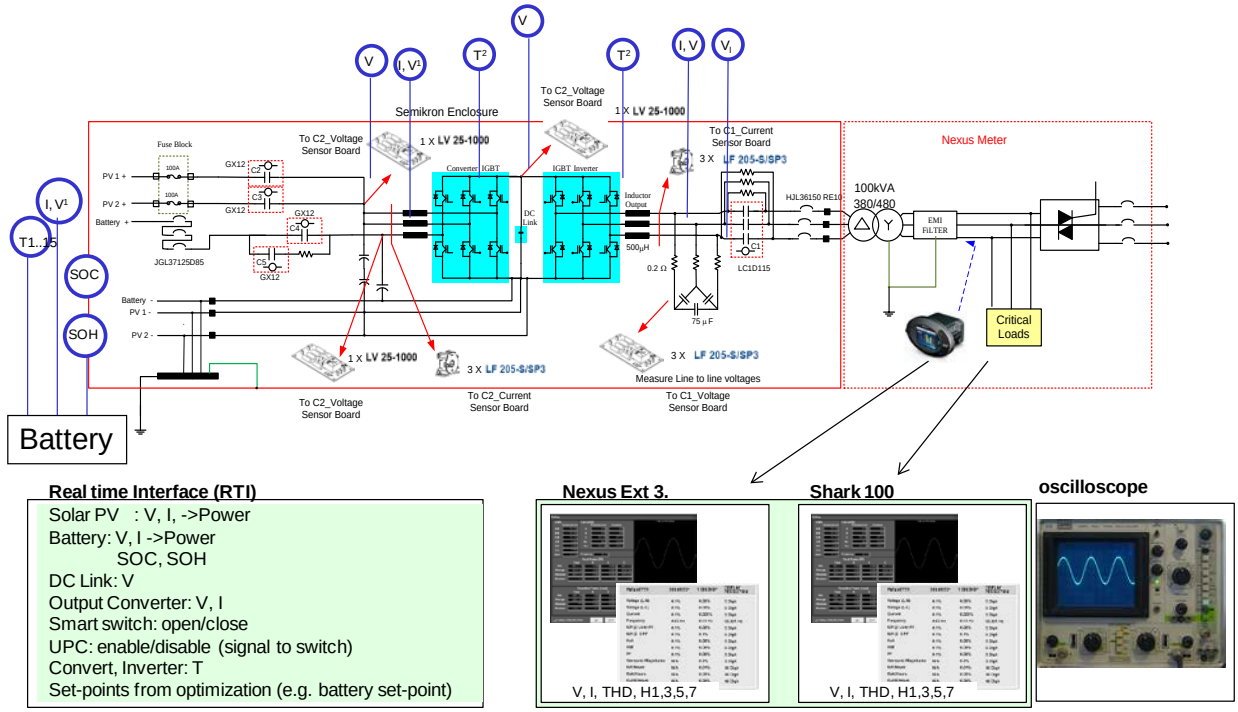

Figure 8. Microgrid demo sensors - type and location.

3.1.3. System robustness to loss of communications

One of the main project objectives was to achieve plug & play operation of renewable and non-renewable energy sources, the energy storage, and the external power grid. To realize this plug and play operation, it is essential that various key components integrate into the system without establishing communication amongst themselves. Furthermore, the components should have fault tolerant capabilities and be able to individually operate in safe mode.

In this project, the operating conditions of various components were sensed and communicated between the UCB and EMS to achieve optimal system operation. Under normal conditions, the set operation points for the components are commanded by the EMS to the UCB for controlling the power flow of the sources and the energy storage. The local controller in UCB is designed to respect and follow the command from the supervisory controller in EMS as close as possible in the best manner. However, in the case were communication between the EMS and UCB is lost, the local controller in UCB is designed to generate the operation set points for the components, and continues to provide reliable power to the critical loads. The calculations of operation set points are carried out in real time at the local UCB controller by sensing various circuit parameters and deploying appropriate control techniques. Different constraints are incorporated in the UCB-based controller to ensure stable and safe operation of the components while, at the same time, meeting the objective of uninterrupted power to the critical load. Under these conditions, the system issues a warning that communication has been lost, however the system continues to operate and provide power to top the loads, but with rule-based power set-points as opposed to optimized ones.

Summary of results: Loss of communication events between the local and the supervisory controller were emulated. During these 'loss of communication' tests, the system successful performed as designed. The power flows in the microgrid were decided locally, based on rule based approach and power balance criterion. The critical loads were successfully powered by the UPC in these emulated events. Furthermore, by reestablishing communication to the EMS, the local controller was able to follow the command from the supervisory control. with stable and seamless transition. Under all the circumstances, required power was delivered to the critical load without any interruption. Tests sequences and detailed assessment of results are included in Sections 5.4 and 6, respectively.

3.2 Qualitative Performance Objectives

3.2.1 System protection and fault management

The system consists of two different protection levels - hardware and software - running in real time inside the controller. The hardware protection level comprises breakers and fuses (e.g. on the DC side exists a breaker inside the battery cabinet, an additional breaker for the battery at the

converter connection point and fuses for the two PV-panels; on the AC side, there are fuses at the output of the converter and fuses at the output of the smart switch). All these components are commercial products, qualified and tested by the manufacture. The hardware base protection provides system protection in the case of either over-currents or short circuits and will act if a software base protection fails.

Software level protection schemes are embedded in the microcontroller, where fault management subroutines run in real time at a 10kWhz frequency (for voltage and currents), and at 1 msec (for IGBT temperature). These fault management subroutines monitor voltages, currents and temperature magnitudes against maximum accepted values, for normal system operation. These subroutines include warnings and fault thresholds. If any current, voltage or temperature exceed the programmed fault threshold, the fault management system immediately declares a fault, open contactor, relays, smart switch and safely turns off the system. The sensed signals are (i) battery voltage and current, (ii) PV voltage and current, (iii) DC-Bus voltage, inverter output current and voltage, (iv) IGBT-junction temperature and voltage of the grid, and (v) frequency and current, measured by the smart switch.

In addition, an independent protection scheme is implemented on the Li-Ion battery. The battery is self protected by a battery management system (BMS). The BMS observes each individual battery module in terms of voltage and temperature. The BMS communicates via a CAN-Bus to the local controller and provides information about (a) the state of charge of the battery and (b) maximum charging and discharging currents limits. If these limits are not respected, independent logic from the local controller opens the contactor that connects the battery to the system. The BMS may receive external commands to open or close the main contactor of the battery system. For safety reasons, during the demonstration, in the case of loss of communications between the UPB and the battery, the system sends a ‘0’ current signal to the battery. The contactor connecting the battery to the UPC is opened, and the system shuts-down.

Summary of results. All the protections in the microgrid system were thoroughly tested and successfully passed the tests. The results for all the different fault conditions are provided in Table 10, Section 6.

3.2.2 Robust integration between EMS and UCB

Another key project objective is robust integration between the supervisory control of EMS and the local control of UCB. To realize the integration, a communication channel based on standard ***protocol was established between the EMS and UCB. The required system information is*** therefore sensed, at the circuit level, and collected by the UCB at a very high sampling frequency (the sampling rate is only a few hundreds of microseconds). This system information is then passed, at a slower rate, to the EMS from the UCB, with a regular interval of few minutes. The system heath, operation modes, and limits are also communicated to the EMS by UCB. This information is used by the EMS to generate operation set point commands, which are communicated to the UCB for execution. This approach enables one to achieve robust integration of the EMS with UCB, as the local controller operates real-time to control the physical system, whereas the EMS uses the past, present and future information to steer the system along an optimum operation path. Further, different modes of operations are studied, and rules and priorities are set-up between the control command of the EMS and UCB for robust and safe operation.

Summary of results. Set-points were communicated from the EMS to the UCB and system performance was measured. These set-points included variables that were both within allowable limits, and out of limits. For example, to test the robust integration of the EMS with UCB local controller, the battery charge current was selected as the variable for the out of bound command to the UCB. In this test, the battery charge current reference, as commanded by the EMS, was 100A, whereas the maximum charge current limit for the battery was 45A. In this case, and all observed cases, the system performed as expected and successful and robust integration between EMS and UCB was demonstrated.

3.2.3 Ease of use

Working with high power and high voltage systems, such as the ones used in this project, requires personnel with proper training for safe system operation. The long-term target is a scenario where facility managers can easily operate the microgrid system, without intervention, and be able to visualize results from supervisory system. They would have a direct link to the energy demand monitoring system providing decision-making support to facility managers. The

demo at McGuire AFB currently needs supervision at all times. This is because the equipment is right now in a development phase, and has not yet achieved UL certification. However, during the demo, an auto start-up sequence was developed and implemented during the tests. In this arrangement, by pushing a START button, the dc-link capacitor is automatically charged from the battery, followed by boosting the capacitor voltage to the desired reference level. Further, by pushing the START button, the control for the PV array is enabled, followed by building the output voltage at the terminal of the critical load to provide it the required power. Figure 9 presents the flow diagram for the auto-start-up sequence. The setup and the elements involved during the start-up or turn-off procedure are illustrated in Figure 10. Appendix C contains guidelines for the system start-up and shut-down.

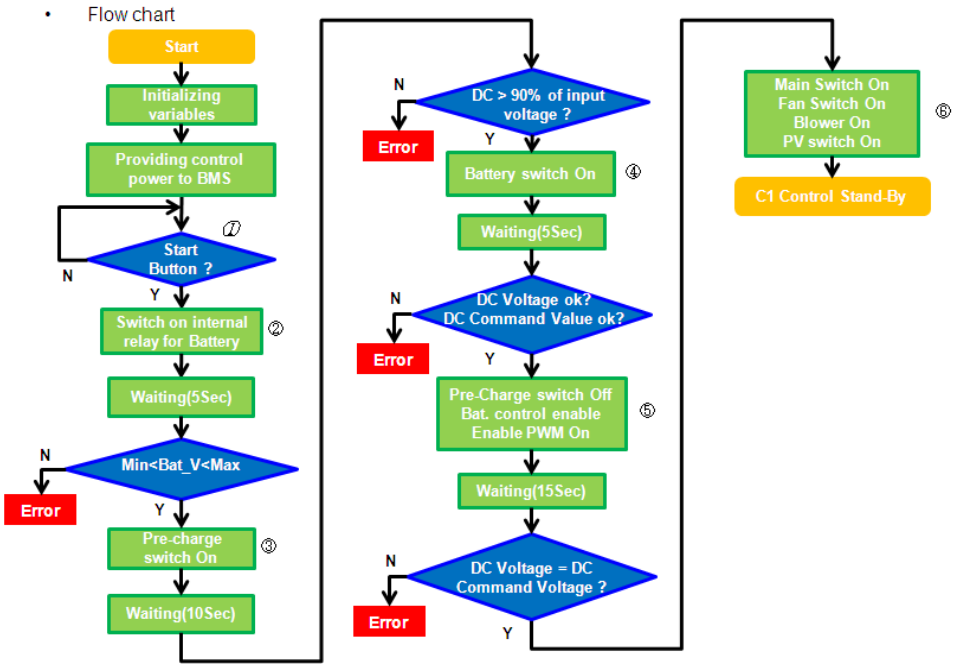

Figure 9: Flow-chart for the auto-start-up sequence

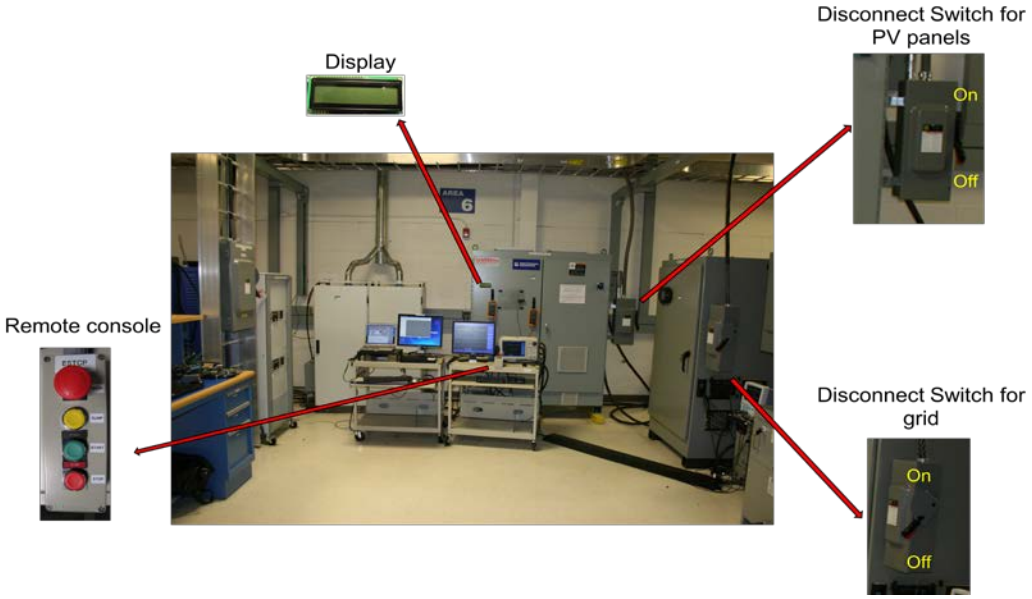

Figure 10: Elements involved in the start-up sequence

Summary of results. The demo at McGuire AFB was supervised by UTRC engineers for safety reasons. DoD personnel will not be able to operate the system until all equipment is properly certified. To achieve both easy and safe microgrid system operation, an auto-start-up sequence was developed and implemented that proved to be easy to use and of high benefit to UTRC engineers.

3.3 Quantitative Performance Objectives (proved by simulation)

The demo system tested at the McGuire AFB medical clinic has a capacity of 80kW. This represents about 5-10% of the total building load. This is not enough to experimentally demonstrate any significance in energy savings through optimized energy management at the building level. Moreover, due to constraints in accessing the network at McGuire AFB, key communications to the BEMS, the building HVAC equipment, or the utility rates were not available. For these reasons, in order to understand the reduction in energy cost as a result of the use of the microgrid, simulations were run using historical load, weather and utility cost data collected from various DoD sites in different parts of the country. With those historical data, several scenarios were analyzed for each site, including grid only, grid supplemented with microgrid that uses rule-based control strategy, and grid supplemented with microgrid that uses

optimization-based control strategy. Input data included load data, weather data, utility cost, microgrid architecture.

3.3.1 Decrease environmental Impact

By selecting a microgrid architecture for each DoD installation, CO_2 emissions should be reduced following the targets provided by Executive Orders. Although no direct measure on environmental impact is guided by EO or Energy acts, there is an indirect guideline for about 20% to 30% CO_2 emission reduction.

- EO 13423/2007 Energy Act: Reduce by 30% by 2015 from 2003 baseline
- 2007 Energy Act: Electricity from Renewable Sources: 25% of installation electricity by 2025

In the simulations performed, the average CO_2 released by the selected system architecture (i.e. components types and sizes) was recorded for each scenario, in comparison with a baseline system where the only source of energy for the electrical loads is the electrical grid. If consideration relative to demand reducing technologies is not included in the analysis, this metric is directly linked to the amount of renewable energy being used in the selected energy microgrid.

Summary of results. To evaluate this performance objective, different cases were run using realistic data in DoD bases, located in the states of North Carolina, Colorado, Oklahoma, New York, and Texas. Realistic weather, loads and utility prices were used. The microgrid architecture assumed for each case was the result of a selection process where the renewable content met 30% of the energy usage in each base. The emission rates to be considered depend on the data taken as references and the equipment considered, ranging from 580 kg of CO_2/MWh to 689kg of CO_2/MWh for the electricity from the grid, estimated for a U.S. national average (Tables 3 and 4 in [14]), 503 kg of CO_2/MWh to 650 kg of CO_2/MWh for diesel generator, and 352 to 725kg of CO_2/MWh for CHP [15] . The numbers used for this estimation were conservative, taken as 689kg of CO_2/MWh for the electricity, 650 kg of CO_2/MWh for diesel generator, and 352 to 725kg of CO_2/MWh for CHP. The result shows that, compared to the grid only as a baseline, CO_2 reduction, under optimization-based control strategy, is between 30-40%, as shown in Table 12, Section 6.

3.3.2 Reduce energy consumption by external utilities

Select microgrid architectures for each DoD installations should support improvements in energy consumption, following targets provided by Executive Orders and Energy Acts. The majority of these savings are provided by managing the electrical demand (i.e., either changing HVAC or lighting systems, improving building envelopes, incorporating building monitoring and control systems, or changing people behavior). Moreover, huge benefits can be achieved by supplying this demand with renewable energy. In this project, we are reporting average energy consumed from non-renewable sources, for each scenario analyzed (scenarios listed in Section 4, Table 6).

Summary of results: As explained in the previous performance objective, the optimal microgrid architecture selected to evaluate these objectives was based on the constraint that renewable sources should contribute to at least 30% of total energy consumption. This selection may result in a renewable fraction that is very close but not exactly to the targeted 30%, because of weather variations and changes in efficiency and performance with load conditions.

3.3.3 System Economics

The energy cost reductions provided by distributed power systems are based on the following: a) use of renewable resources, which have zero fuel cost (despite the usual high "initial" cost); and b) the energy manager, that operates under optimized energy costs when considering time-of-the-day utility cost structures. Renewable energy sources should provide at least 25% of load demand, depending on the selected microgrid architecture and location. In the simulations performed, a microgrid with optimum sizing should provide ≥30% energy cost saving compared to the grid-only scenario. The optimized-based control strategy should provide ≥5% cost savings compared to rule-based control strategy. Other metrics, such as savings and years to payback, are estimated by using the NIST Building Life Cycle Cost data for sample energy microgrid architectures.

Summary of results: Annual operating costs were computed and compared to the value of both the microgrid and the associated optimization-based supervisory system. This assessment was based on a microgrid system selected to provide 30% annual energy, which was based on renewable resources in DoD installations with varying loads and weather conditions. Results

show that microgrids can provide operating cost savings in the range of 55-65%, assuming an optimization based supervisory system is present. The contribution of an optimization-based supervisory control can range from 6-19%, depending on the utility rates and loads. The payback of the non-renewable microgrid equipment, including CHP, diesel and the battery range from 3.5-6.0 years, and varies significantly depending on the assumed cost of the equipment installed.

4 FACILITY/SITE SELECTION: McGuire AFB Medical Clinic

4.1 FACILITY/SITE LOCATION AND OPERATIONS

The energy microgrid system was installed at the McGuire AFB medical clinic boilers room, in the available space, as shown in Figure 11. The two electrical rooms, where the AC bus and Xantrex converter were located, are located in front of the boiler room, making it easier to install and wire all equipment provided by UTRC.

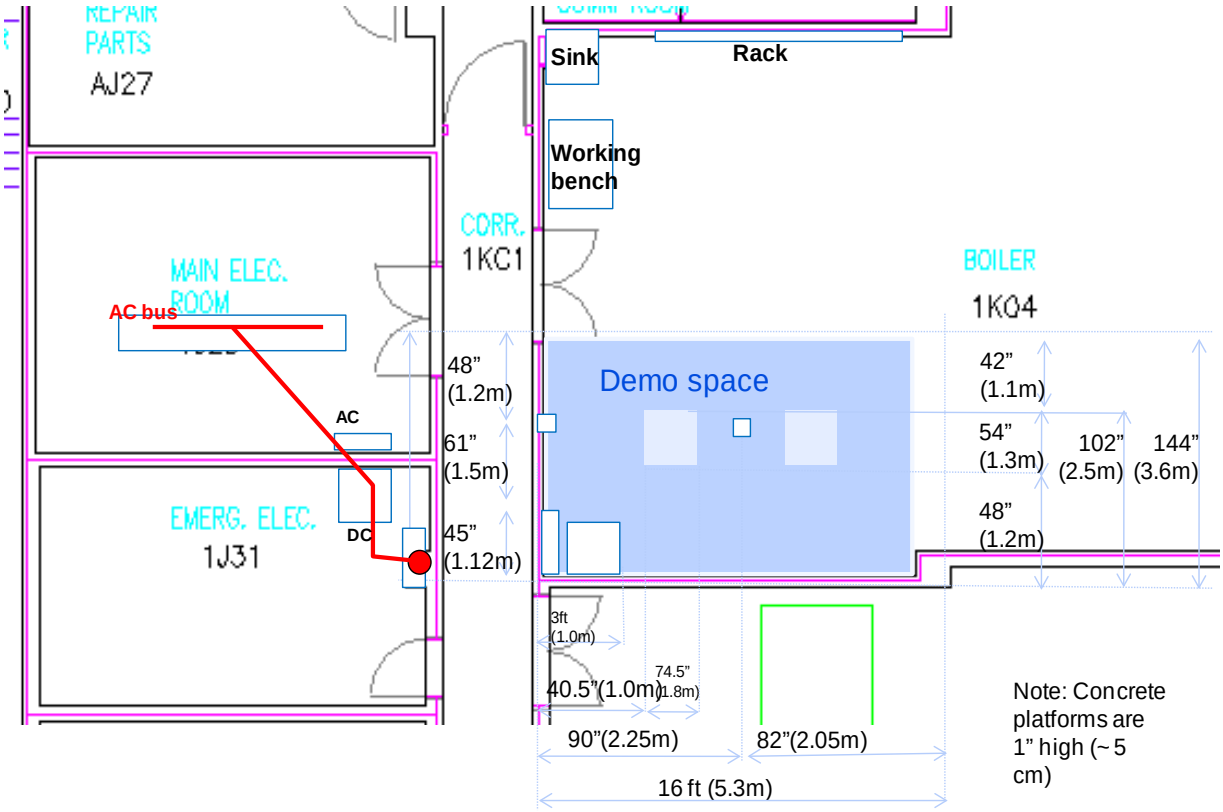

Figure 11: Mechanical and electric rooms at McGuire AFB medical clinic and microgrid demo space.

4.2 FACILITY / SITE CONDITIONS

The solar PV system at McGuire air force base medical treatment facility consists of:

1. 75.6 kWatt polycrystalline solar PV provided by Garland Energy Systems Inc. http://www.garlandenergy.com/about.html (175 A, 485 Vdc, Vdcmax: 600 V; Udcmax: 351 A)
2. Xantrex inverter 480 V peak, 277 V rms, 150 A
3. Solar Energy monitoring system software provided by http://noveda.com/en/

A 1-line diagram of the PV facility at the Mc Guire AFB medical clinic ,with all the components mentioned above, is shown below in Figure 12.

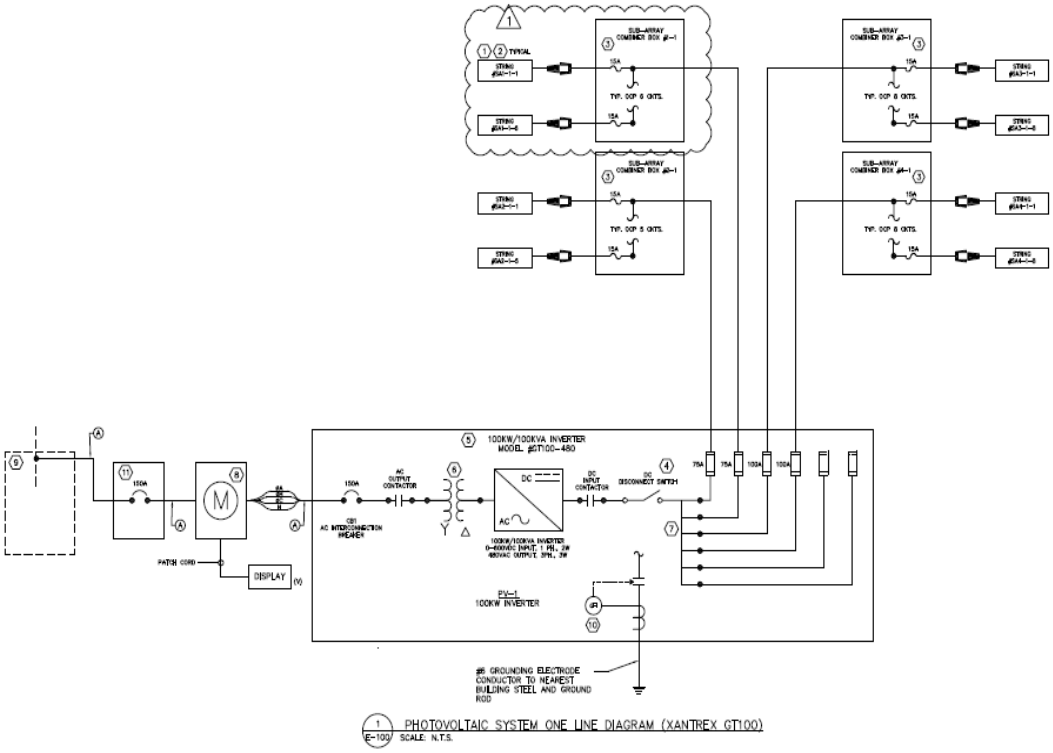

Figure 12. 1-line electric diagram of existing PV system at McGuire AFB medical clinic

4.2.1 Electrical Work and Modifications Required to McGuire AFB Medical Clinic

The existing installation of the PV system was modified (see Figure 13) to allow operation in two modes, Operating Mode 1, which represents the already existing connection at McGuire AFB, and Operating Mode 2, representing implementation of the new ESTCP Demonstration System. As shown in Figure 13, major components of the ESTCP System include the Universal Power Cell (UPC), the Grid Tie unit with Smart Switch, Battery, the Load Bank, and the Energy Management System. Appropriate transfer switches, shown as “AC Junction Box (AC JBox)” and “DC Junction Box (DC JBox)”, allow the mode of operation to be easily changed from the existing inverter setup to the ESTCP Demonstration, and back again. All approved lay-out diagrams are included in Appendix B. The location of these major components, in the boiler room, is shown in Figure 14.

The design and installation process included:

1) Obtaining all baseline electrical diagrams and lay-outs from McGuire AFB.
2) Designing the new electrical system, as shown in Figure 13
3) Designing the battery vent system to ensure proper venting, in the case of accidents.
4) Having new diagrams and design certified by a McGuire AFB approved electrician.
5) Sending the certified diagrams and other pertinent documentation (e.g., battery safety information) to McGuire AFB for approval, as required by the energy managers and environmental department.
6) Signing contracts with McGuire AFB approved electrical and civil subcontractors.
7) Shipping all equipment according to Department of Transportation (DoT) regulations.
8) Installing the equipment according to the certified diagrams.
9) According to the DoT, LiIon batteries need special procedures for transportation. Hence, the commissioning and decommissioning of the LiIon batteries was done by SAFT, the battery manufacturer. Also, special transportation requirements and sheets needed filled out by the manufacturer.
10) After all equipment was shipped and re-installed at McGuire AFB, UTRC engineers moved all other equipment, including computers and oscilloscopes, to enable the measurement of system performance.
11) Transfer of transfer switches within the AC and DC JBoxes by UTRC engineers, or by the electrical subcontractor, in order to move the PV system from its baseline configuration to the UTRC microgrid configuration.

4.2.2 Site Related Permits and Regulations

Guidelines for relevant equipment and safety requirements as identified by the National Electrical Code, OSHA, and NFPA regulations are followed with regard to electrical and photovoltaic generation and distribution, and LiIon battery installation and ventilation. In particular:

- NEC Article 690 (Solar Photovoltaic Systems)
- NFPA 70E (Standard for electrical safety in the Workplace)
- IEEE 1547 (Standard for Interconnecting Distributed Resources with Electrical Power Systems)

Our equipment is a demo system that follows the guidelines provided by the code mentioned above. The equipment serves research purposes and has not been certified at the time this report is delivered (October, 2012).

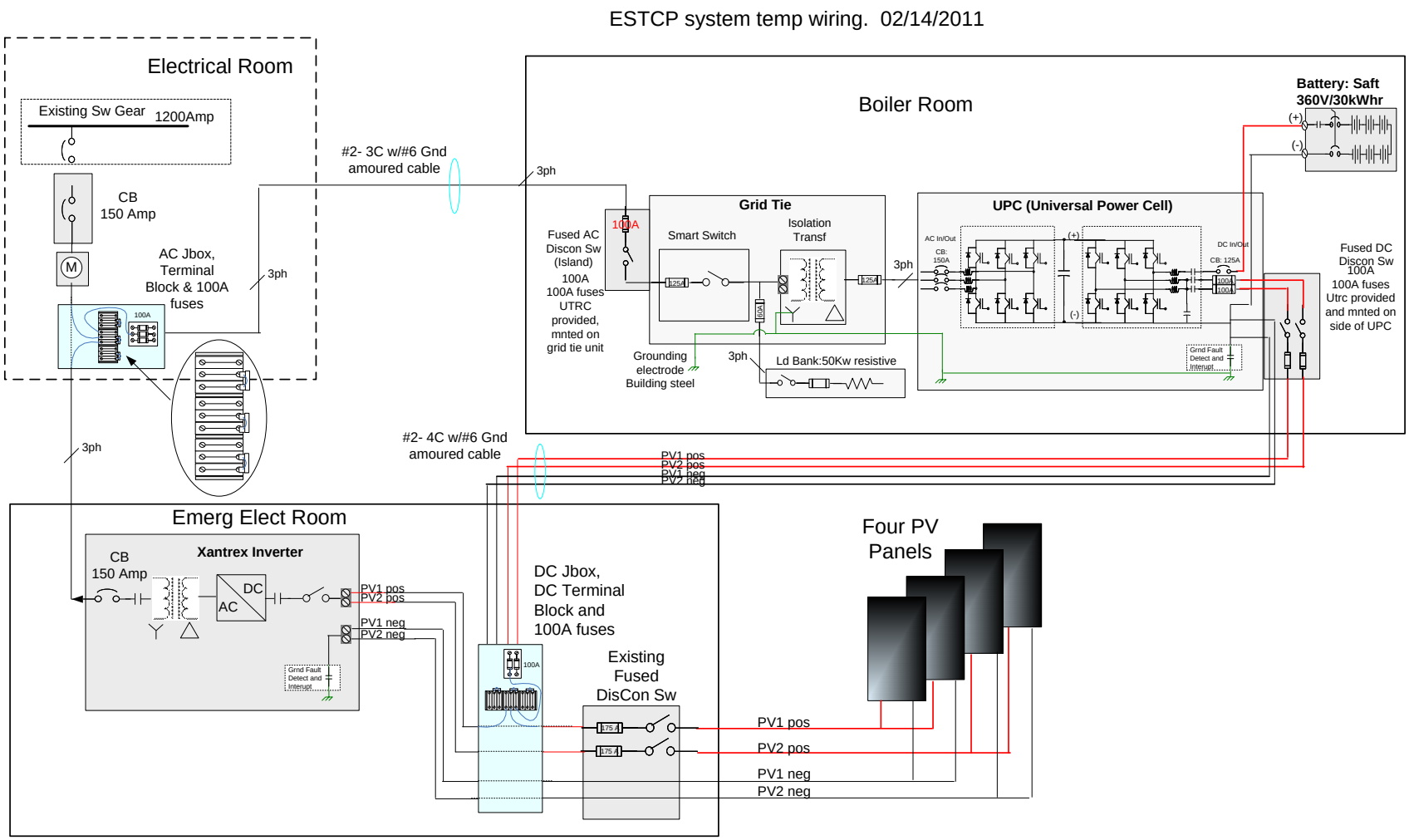

Figure 13: Schematic of electrical system installed at McGuire AFB medical clinic

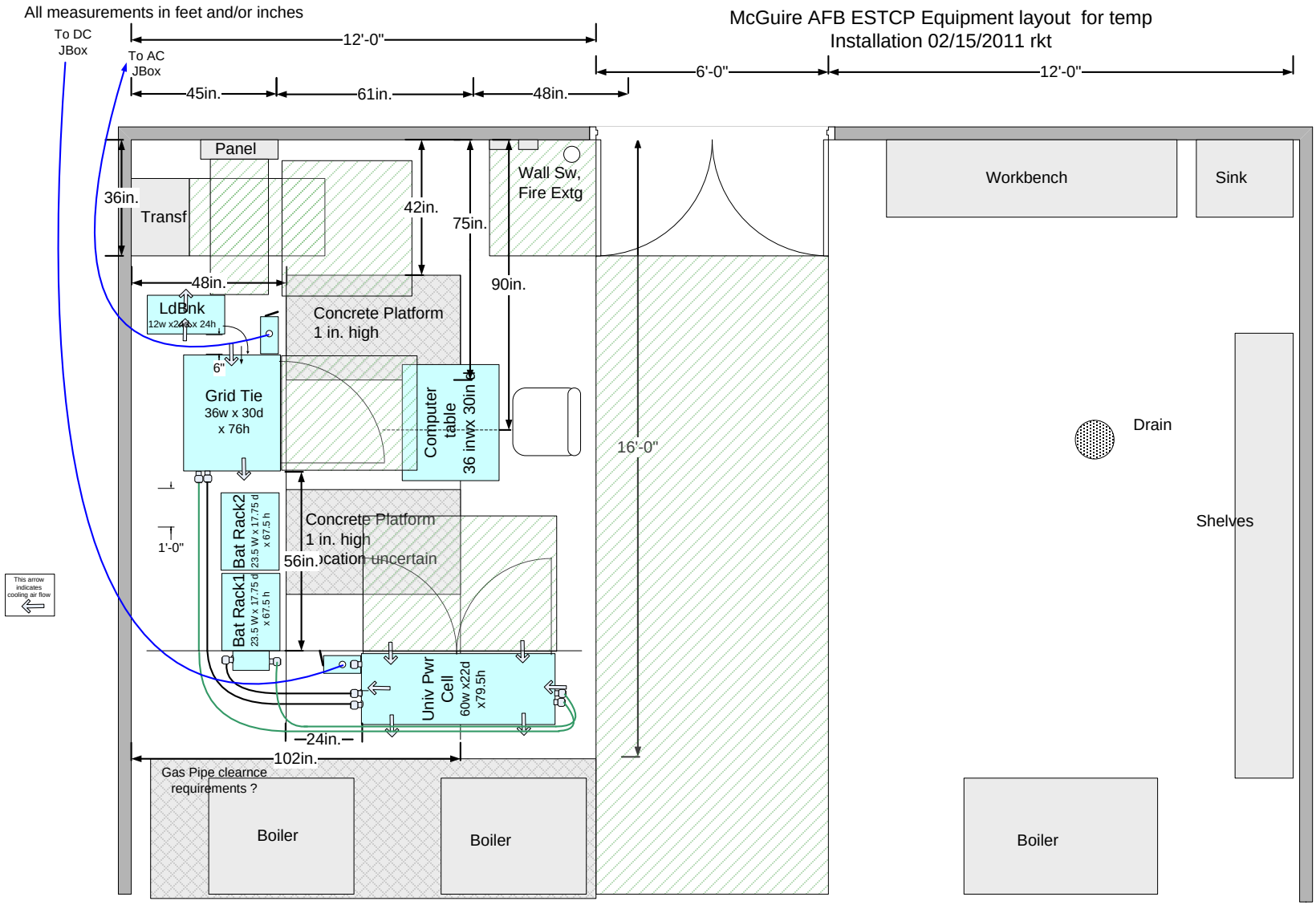

Figure 14: Schematic of energy microgrid system lay-out installed at McGuire AFB medical clinic

5 TEST DESIGN

This section provides a detailed description of the system design and testing conducted in order to address the performance objectives described in Section 3.0.

5.1 CONCEPTUAL TEST DESIGN

The overall test consisted of two parts:

- Experimental demonstration of energy microgrids with the capability to: a) be extensible to a plug&play system capable of integrating multiple energy sources and storage with the grid; b) enable security of supply by seamlessly providing power to emulated critical loads; and c) work in coordination with the microgrid energy management systems (EMS). In future stages of development, the EMS will provide optimal set-points in coordination with utilities and energy demand systems (e.g. HVAC, lighting, building equipment, etc), or with other microgrids.
- Simulation of optimal energy microgrid designs and operations, to provide insights into the economic and environmental value proposition of renewable based energy microgrids, demonstrated for typical DoD installations.

5.1.1 Data Gathering System

UTRC has developed an application software named 'Real Time Interface' (RTI). RTI is used for monitoring and modifying remote variables of code running on TI's 28335 digital signal controller (DSC) family from a personal computer (PC) application.

5.1.2 Instrumentation

A 16 channel Yokogawa DL750 ScopeCorder was used by UTRC for data gathering. Each channel has a 10 mega samples per second data acquisition module. This instrument allows engineers to look at both current and voltage transients. The instrument offers multiple trigger capability that helps to capture abnormal operation over a large period of time. The converter is equipped with a Nexus 1500 meter with real time power quality monitoring, peak demand, voltage and current recording, phasor analysis, CBEMA log plotting, total harmonic distortion and k-factor. (http://www.electroind.com/nexus1500.html) All metering points were described

in the Facility Metering Section of this report (Section 2.1.3), and graphically presented in Figure 8. A summary is provided in Table 5.

Table 5: Instrumentation Installed at Demonstration Site

System	Type of Measurement	Location / Description
Solar PV	V sensor	PV output voltage
Solar PV	I sensor	PV output current
Battery	V sensors	The battery management system (BMS) measures voltage at individual cells, modules and total system. The information is used to provide cell balancing capability. The total battery voltage is communicated to the main microgrid system.
Battery	I sensor	The BMS measures current in each parallel string (one for the demo) and is communicated to the main microgrid system.
Battery	T sensors	The BMS measures temperature at 4 different points in each module and disconnects the battery in the case that the max. temperature limit is detected.
Battery	SOC estimator	The battery state of charge (SOC) is estimated by the BMS and communicated to the microgrid system.
Battery	SOH estimator	The battery state of health (SOH) is estimated by the BMS and communicated to the microgrid system.
UPC	V sensor	DC link voltage.
UPC	I sensor	DC link current.
UPC	V (x 3 phases)	UPC output voltage in each phase
UPC	I (x 3 phases)	UPC output current in each phase
UPC	Power measured by Nexus meter	Power level after the EMI filter (see Figure 4).
UPC	Harmonic distortion measured by Nexus meter	Harmonic distortion level after the EMI filter (see Figure 4).
Critical loads	Power measured by Shark 100 meter	Power level at the input of critical loads
Critical loads	Harmonic distortion measured by Shark 100 meter.	Harmonic distortion at input of critical loads.

5.1.3 Failure and Risk Analysis

To help determine the most appropriate hardware design and controls architecture for the microgrid system, a Failure Modes Effect Analysis (FMEA) was conducted under this project and periodically reviewed by UTRC engineers. The FMEA template takes every component of the system, determines the risk and severity of failure of each, and provides a 'system' level view of considering the potential failure when interacting with other components. During design meetings, the team (assisted by UTRC technical fellows) reviewed current design fault

mitigation strategies, and agreed on actions needed to minimize each risk and potential consequence. This design process is typically followed in development of commercial products. Research projects, however, are more focused on minimizing risk related to technical barriers. Nonetheless, The UTRC team adopted this FMEA methodology for this microgrid project. Note: certain design decisions, made solely for the purpose of this demo project, might change during a product development phase. For example, the smart switch serving as the single point of coupling (POC) with the electrical grid was developed and tested under this project as a proof of concept. For the purpose of this demo, there was one smart switch comprising utility-grade parts. However, for a commercial product, the selection of components and number of redundant parallel switches will be a decision based on the tradeoff between reliability and target cost. This decision may also be done on a case-by-case basis depending on customer requirements.

5.2 BASELINE CHARACTERIZATION

The IEEE 1547 Standard is the baseline standard selected for evaluating both the quantitative and qualitative microgrid performance objectives relative to the security of energy supply and power quality. This means, for this microgrid demonstration, it was not necessary to measure the energy or power performance of the building or the solar PV system installed at McGuire AFB medical clinic. The electrical 1-line diagram of the solar PV system at McGuire AFB, and the building lay-out presented in Section 4 (and provided by energy managers at McGuire AFB), served as the project's baseline.

The baseline information used to prove all the Quantitative Performance Objectives (by simulation) comprised:

- Utility rates used by DoD installations in different weather conditions
- Baseline cooling, heating, electrical and critical loads in sample DoD installations representing different weather conditions.

In addition, a load bank was used to simulated critical loads. Although the exact building electrical loads were unknown (no measurements exist for this building), it was estimated that the building loads may vary from 50kW at night to 500kW or more during the day, and the critical loads may represent 20% of the total loads. Note: with these loads, it would have been prohibitively expensive to design a microgrid system with the available funding level.

Quantification of the environmental and economic benefits, provided by the microgrids, was carried out for five different locations. These locations were selected based on typical weather conditions in 5 different US climatic zones (see Figure 15), including New York, Colorado, Oklahoma, North Caroline and Texas. Typical load profiles obtained using building simulation analysis tools, and DoE-published utility rates are also used as baseline information.

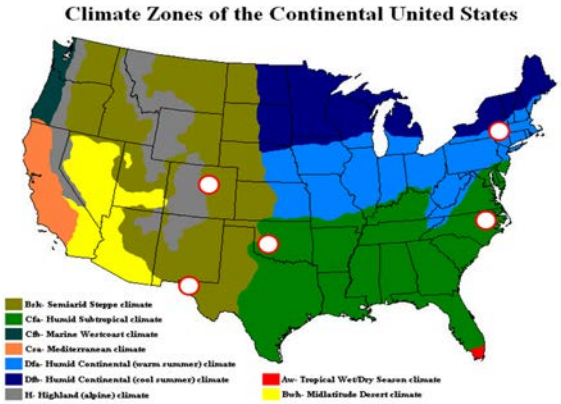

Figure 15: U.S. climate map and selected locations for microgrids benefit analysis.

5.3 DESIGN AND LAYOUT OF TECHNOLOGY COMPONENTS

All details, relative to the technology lay-out and components, were provided in Section 2.0, and are represented in Figure 1. The lay-out of the system at McGuire AFB is shown in Figure 2.

5.4 OPERATIONAL TESTING

The explanation of operational tests is divided into two sub-sections:

- Hardware and System Controls operational testing, at the UTRC Energy Conversion labs and at the McGuire AFB medical clinic, with the objective being to measure certain quantitative and qualitative Performance Objectives; and
- Simulation test cases, run in order to quantify certain quantitative Performance Objectives concerning the economic and environmental benefits of energy microgrids and Energy Management Systems.

5.4.1 Operational Tests

System tests were performed at UTRC Energy Conversion Laboratory before moving the system to McGuire AFB. System level tests at UTRC were finalized in June 2011. In parallel, the

required electrical and civil pre-work required at McGuire AFB was performed by Powers Electric Inc. Formal approval, to proceed with the modifications and tests at McGuire AFB, was obtained on April 14, 2011. The system was moved to McGuire AFB on August 4, connected to the solar PV in the medical building, and tested during August 2011. The operational tests performed at the UTRC Energy Conversion Laboratory are included in what follows. These tests were repeated at McGuire AFB to the extent the weather conditions (i.e. solar radiation levels at the moment of the experiments) allowed for replication:

- Test system operation and measured performance, represented by DC link voltage, input and output current and voltage waveforms, and harmonic distortion, under grid-connected conditions, and with energy management system available. Subtests included high and low solar radiation conditions[6]; and zero, low, medium and high load conditions at the resistive load bank (related to Quantitative Performance Objective 1 and 2).
- Test software protection modes under conditions that included over-voltage, over-current, battery over and under charge, and fault ground protections (related to Qualitative Performance Objective 1).
- Simulation of different inverter reference power levels, to ensure the PV and battery properly follow sudden changes in power references, while keeping to the requirements o stability and power quality (related to Quantitative Performance Objective 3).
- Simulation of loss of communications between the UPC and the EMS, to verify safe performance under loss of communications conditions (related to Quantitative Performance Objective 3).
- Simulation of a power outage situation through a 'grid disconnect switch' included in the system. Measurement of transition times, voltage and current waveforms to demonstrate seamless transition and to compare results with guidelines provided by IEEE1547. (related to Quantitative Performance Objective 1). *Note:* testing of power switch performance under power sag and power swell conditions were performed in a separate microgrid system at UWM lab, which possesses the capability to simulate these abnormal conditions. These power switch test results were compared to the IEEE criteria provided

[6] Low and high solar radiation conditions (i.e >600W/m2, and <200W/m^2 respectively) need to occur while the test are being performed at McGuire AFB, NJ, and from 8 am to 6 pm. If one of these conditions do not happen, the final report will include laboratory results where any solar radiation conditions can be easily emulated.

in Table 2 and Table 3. These test results and performance comparison are reported in Section 6

- Simulation of "end of the power" outage conditions and testing of the reconnection capability (related to Quantitative Performance Objective 1) through the following operational sequence:
  a. Monitoring, by the smart switch, of voltage and frequency of the external grid and microgrid, and comparison to values against the synchronization window, defined by:
     - Vab_grid –Vab_inv voltage < 10% of the nominal voltage
     - Vab_grid angle – Vab_inverter angle < 20°
     - The slip frequency between the voltages is less than the maximum slip frequency setting = 0.3Hz
  b. When the conditions above are met, a synchronization signal (Synch_signal) goes to a low state, giving the order to the thyristor bridge to connect with the grid. For the critical loads, the transition is seamless because there are no transients in the voltage during the connection.

5.4.2 Simulation Tests to quantify Environmental and Economic Microgrid and Supervisory System Performance (refer to Section 3.3).

Table 6 summarizes the microgrid architectures and test-cases selected for evaluating the economic benefits of energy microgrids. The locations were selected to have a variety of weather conditions; while the microgrid architectures were selected based on initial cost optimization with a constraint of the percentage or energy provided by renewable sources. For each given microgrid configuration, the following four scenarios were analyzed to evaluate the benefits of microgrid and the associated supervisory control:

1. Grid only
2. Grid and renewable sources
3. Grid and microgrid (including renewable sources) with simple rule-based control strategy
4. Grid and microgrid (including renewable sources) with optimization-based control strategy

For each scenario, the annual operation of the system was modeled and simulated, using hourly set-points, calculated based on load input data (obtained using building simulation analysis tools), and utility rates published by DoE.

Table 6: Microgrid Architecture for Selected Sites

	NC	CO	OK	NY	TX
Grid	Yes, unlimited	Yes, unlimited	Yes, unlimited	Yes, unlimited	Yes, unlimited
Solar PV (KW)	35 MW	0	0	0	20 MW
Wind turbines(kW)	65 MW	70 MW	65 MW	55 MW	50 MW
CHP (microturbines+absChiller)	5 MW microturbines	17.5 MW microturbines	35 MW microturbines	27.5 MW microturbines	12.5 MW microturbines
Diesel generators	4 MW	2 MW	8 MW	12 MW	2 MW
Batteries, LiI (kWh capacity)	1 MWh	1 MWh	1 MWh	1 MWh	1 MWh

5.5 SAMPLING PROTOCOL

All communications protocols used in the microgrid demonstration are shown in blue fonts in Figure 16 (next page). Figure 17 shows the data exchange between comports. Table 7 summarizes the sampling protocols and rates used in this project. UTRC performed the data collection and analysis. The communications protocols and sampling rates are described in what follows.

- All solar PV, battery, UPC, and grid measurements of current and voltage were sensed within the UPC and communicated to the UPC control board in an analog fashion (though voltage levels).
- The status of the smart switch was sent to the universal control board via a binary 1/0 signal, indicating whether the switch is closed or open, respectively. Similarly, a binary 1/0 voltage signal from the controller to the smart switch relay indicated whether it was ready to connect, or is connected (binary 1), or is disconnected (binary 0).
- The battery management system (BMS) communicates with the universal control board using CAN Open protocol with a sampling frequency of 200 milliseconds.
- Data from the UPC was transmitted to the RealTimeInterface (RTI) software through a serial RS232 communication protocol. The protocol has been specially developed for the project as a means to gather and log data. The sampling rate is 1kHz.
- The energy management (EMS) reads data from the UPC and communicates data back to system by exchange of information through input/output files. The rate of exchange of information between the UPC and the EMS can vary and is not required to be lower than a few seconds.

- The energy management (EMS) read weather data from the National Centers for Environmental Prediction using web-enabled-service communications (internet services must be available). Web-services can also be used to communicate with state of the art building management systems (Note: communication with the building energy management systems at McGuire AFB was out of the scope of this project; weather data via web-services is not allowed for demo projects at DoD Installation).

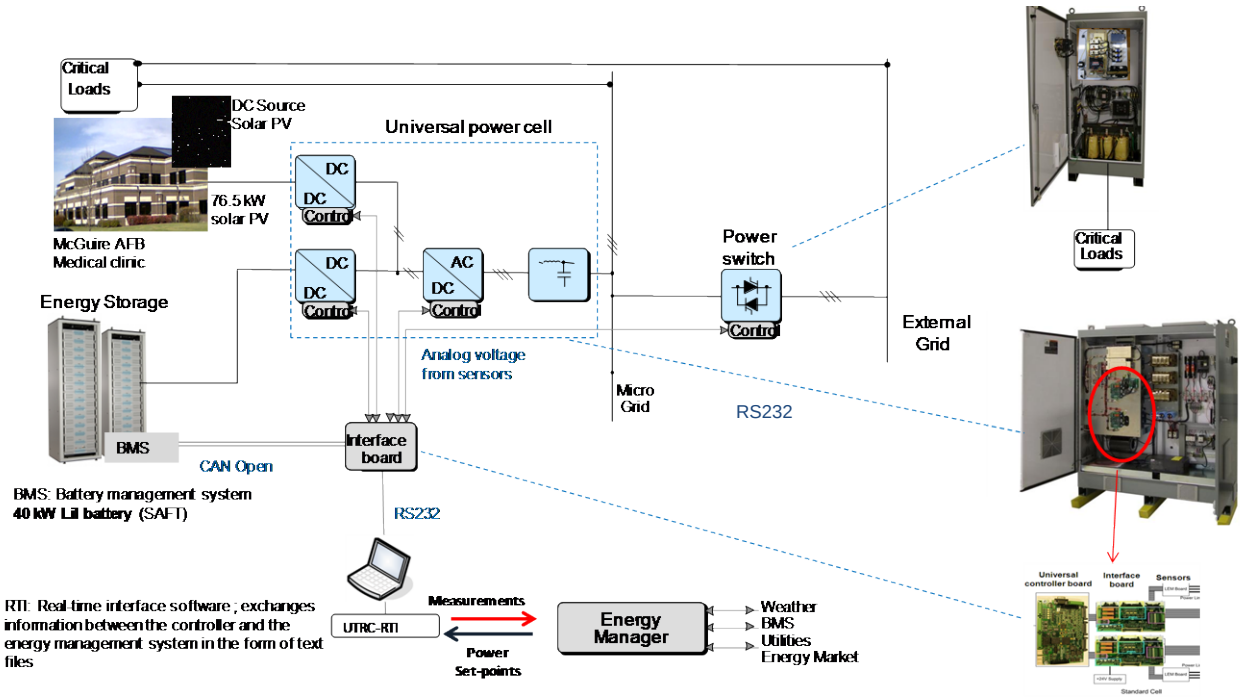

Figure 16: Schematic of the system lay-out and communication protocols between components (in blue)

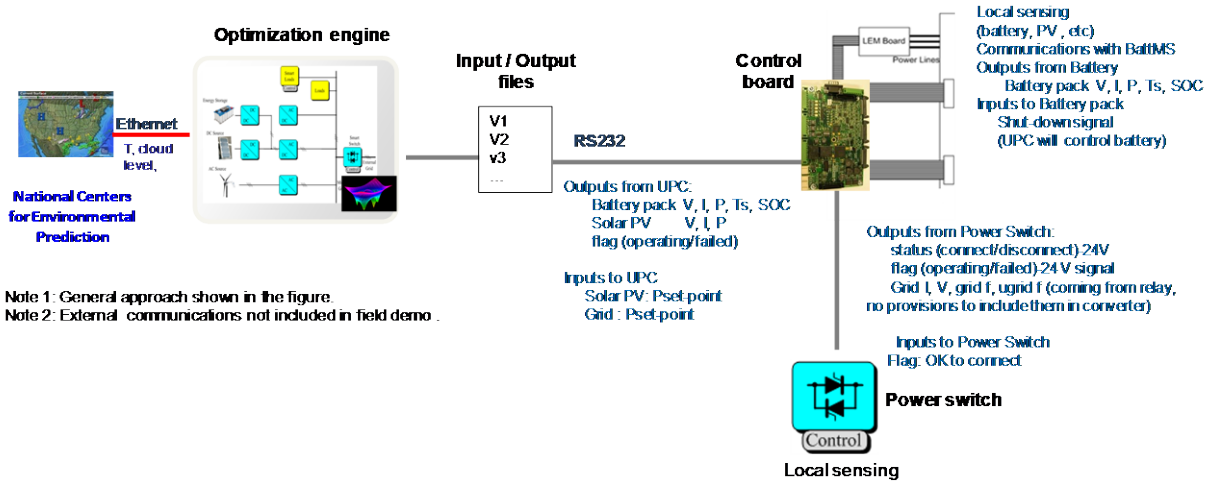

Figure 17: Schematic of showing communications protocols and data exchange between microgrid components

Table 7: Sampling protocols summary table

Systems to communicate	Protocol	Update time
UPC relevant variables (e.g. input and output I, V) communicated to UPC	Local analog sensing + analog-to-digital (ADC)	0.1 msec (10kHz)
Local switch local relevant variables (I,V) communicated to power switch relay	Local analog sensing + analog-to-digital (ADC)	1 msec (1 kHz)
Smart switch and UPC	Binary voltage signal	1 msec (1 kHz)
Battery management system (BMS) and UPC	CAN Open	200 msec
UPC and RTI	RS232, serial communications	1 msec (1 kHz)
RTI and EMS	File exchange	~ 1 min (as needed)
UPC and EMS	Visualization/debug tool (RTI)	~ 1 min (as needed)
EMS and weather, utilities and/or electrical markets	Web services	~ 1 min (as needed)
EMS and building energy management systems	Web services, BacNet RS232, or CAN (out of scope)	~ 1 min (as needed)

5.5.1 EQUIPMENT CALIBRATION AND DATA QUALITY ISSUES

- ***Calibration of Equipment***

The oscilloscope used to collect data at McGuire AFB was calibrated by the manufacturer. Additionally, standard auto-offset tuning routines were used to calibrate every voltage, current and temperature sensor. These routines run each time the microgrid system is started; they measure the background noise in order to baseline each sensor.

- ***Quality Assurance Sampling***

Sensors, oscilloscopes and data acquisition systems, of the highest quality, were used to collect data. Tests were repeated to ensure enough sampling, and data was analyzed during and after each test sequence to determine if another sample was required. All tests were repeated at McGuire AFB, and compared to data obtained at the UTRC lab, to ensure quality of data acquisition.

5.6 SAMPLING RESULTS

A thorough description of project results is included in Section 6 of this report, whereas the tables and graphs provide the full demonstration of results accomplished during the project. Table 8 provides a summary of all tables and graphs presented in Section 6, as a result of the work performed in this project. The table is divided into three sections: (1) quantitative and (2) qualitative performance objectives, and (3) qualitative performance objectives demonstrated through simulation.

Table 8: References to Graphics and Tables illustrating project results.

Related Performance Objectives	Table/Figure	Description
Quantitative Performance Objectives		
Quantitative Objective 1. Security of energy supply for sensitive loads	Figure 18: Grid Synchronization at UTRC lab	The figure shows an example of the synchronization process between microgrid and the external grid during the grid connection process (i.e. islanding to grid-connected transition). Results shown were obtained at UTRC.
Quantitative Objective 1. Security of energy supply for sensitive loads	Figure 19: Grid Synchronization at McGuire AFB	Same than Figure 20, but results shown represent real conditions at McGuire AFB.
Quantitative Objective 1. Security of energy supply for sensitive loads	Figure 20: Power flow control.	The figure shows an example on how the critical loads are served either from the inverter, the grid or a combination of both.
Quantitative Objective 1. Security of energy supply for sensitive loads	Figure 21: Grid Disconnection and Islanding detection tested at UTRC lab.	The figure shows stable and robust system results gathered at UTRC Labs where a blackout is emulated by opening a disconnect switch at the connection point to the grid
Quantitative Objective 1. Security of energy supply for sensitive loads	Figure 22: Grid disconnection and reconnection tested at McGuire AFB.	Same than Figure 21, but at McGuire AFB.
Quantitative Objective 2. Stable integration of multiple energy sources and storage with the electrical grid.	Figure 23: Battery operation in off-Grid mode	The figure shows stable integration of photovoltaic panels and lithium Ion battery with the grid in off-grid conditions, as tested at UTRC Lab.
Quantitative Objective 2.Stable integration of multiple energy sources and storage with the electrical grid.	Figure 24: System performance in off-grid mode under large load variation at the McGuire **AFB**	Similar than above, but for the system installed at McGuire AFB.
Quantitative Objective 2. Stable integration of multiple energy sources and storage with the electrical grid.	Figure 25: Voltage Harmonic distortion in off-grid mode	The figure shows the voltage quality provided to sensitive load while grid disconnected exceeds electrical standards requirements listed in IEEE std 1547 where the maximum allowed voltage distortion is 5%

Quantitative Objective 2. Stable integration of multiple energy sources and storage with the electrical grid	Figure 26: Harmonics regulators	Results showing the improvements obtained by incorporating a voltage regulator in a grid-connected situation.
Quantitative Objective 2. Stable integration of multiple energy sources and storage with the electrical grid.	Figure 27: System performance under large solar radiation changes	The figure illustrates the robustness of the system during changes on solar radiation energy levels. Solar radiation changes slowly with the sun position but clouds can produce sudden changes on solar radiation levels that reach the PV array. Results obtained at McGuire AFB.
Quantitative Objective 2. Stable integration of multiple energy sources and storage with the electrical grid.	All figures in Appendix E	The figures show the results of smart switch performance compared with IEEE 1547 standards.
Quantitative Objective 3: System robustness to loss of communications	Figure 28: Operation of the system under loss of communication (between t1 and t2) and re-establishment of communication between UTC Agent and EMS (at t2)	The figure shows results when the communication with the energy management system (EMS) is lost and the local controller takes over the operation set points of the system and run it successfully. This figure also shows the capability of the system to follow the EMS command once the communication is re-established.
Quantitative Objective 3: System robustness to loss of communications.	Table 9: Summary of operational results under loss of communication	The table summarizes the capabilities and performances of system under the loss and re-establishment of the communications.
Qualitative Performance Objectives		
Qualitative Objective 1: System protection and fault management.	Table 10: Summary of Software Fault Protection Tests	The table provides a summary of Software Fault Protection Tests.
Qualitative Objective 2: Robust integration between EMS and UCB.	Figure 28: Operation of the system under loss of communication (between t1 and t2) and re-establishment of communication between UTC Agent and EMS (at t2); and qualitatively description in the section corresponding to Qualitative Objective 2.	This performance of this objective is shown in Figure 28 (robustness when loss of communication between MS and UCB) and qualitatively described in the section corresponding to Qualitative Objective 2.
Qualitative Objective 3: Ease of Use.	Figures 29 through 31 (Easy start and shut-down sequence)	The figures show a 'user guide' on how to turn off and on the system.
Simulated Qualitative Performance Objectives		
(Simulation results) Objective 1: Decrease Environmental Impact.	Table 12: Average annual CO2 Emission **Reduction**	The table shows environmental impact, measured in reduction of CO2 emissions per year, for sample locations in the United States.
(Simulation results) Objective 2: Reduce energy consumption by external utilities.	Table 14: Annual Energy Consumption (MWh/year)	The table shows the impact on energy consumption, measured in reduction of MWh of energy per year, for sample locations in the United States.

(Simulation results) Objective 3: System economics.	Figure 30: Annual Operating Cost	The figure shows the operational cost (related to energy) of five different locations in the United States, obtained by simulations of energy profiles and equipment schedules with realistic utility and consumption data, and for microgrid architectures optimized in each case.
(Simulation results) Objective 3: System economics.	Table 17: Annual Cost Savings of Microgrid	The table shows the potential economic benefits of energy microgrids in five different locations in the United States, and for microgrid architectures optimized in each case.
(Simulation results) Objective 3: System economics.	Table 18: Microgrid Payback Time	The table shows the potential payback of energy microgrids in five different locations in the United States, and for microgrid architectures optimized in each case.

6 PERFORMANCE ASSESSMENT

Data and oscilloscope images gathered at the UTRC conversion laboratory and the McGuire AFB were used to assess performance objectives for this project. Assessment of methodologies and results are shown in this section.

6.1 QUANTITATIVE PERFORMACNE OBJECTIVES

6.1.1 Objective 1: Security of energy supply to critical loads

Voltage and current waveforms were gathered for several scenarios, including:

- Grid synchronization (i.e. the microgrid serving the critical loads and disconnected from the grid, synchronizes and connects to the grid)
- Sudden changes in inverters power references, that represent conditions when battery or solar PV output suddenly changes (e.g. during a cloudy day)
- Disconnection and synchronization during power outages.

Sample data and performance assessment criteria for each of these scenarios are presented in this section.

The synchronization process described in Section 5.4 were evaluated and demonstrated through data gathered at UTRC lab and at McGuire AFB and illustrated in Figure 18 and Figure 19. These graphs show how the converter (red line) synchronizes and connects to the grid (blue line). The inverter exports energy produced by the PV panels and reaches the maximum power point tracking10 seconds after the reconnection starts. Notice that before the connection between the grid and the microgrid, critical loads are being fed by the solar PV and the battery through the inverter. Once the inverter connects to the grid, critical loads may get power either from the grid or the inverter, depending on photovoltaic power generation. In both these figures, notice the stable voltage delivered to the critical loads, indicating successful seamless transition between grid islanding and connected operating modes.

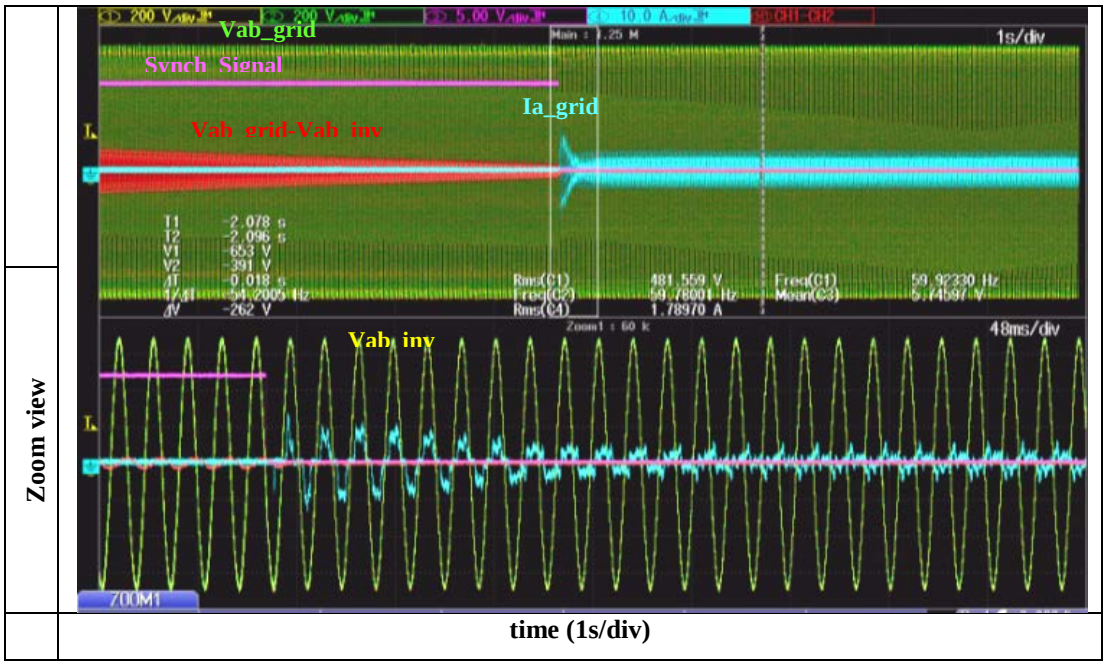

Figure 18: Grid Synchronization at UTRC lab

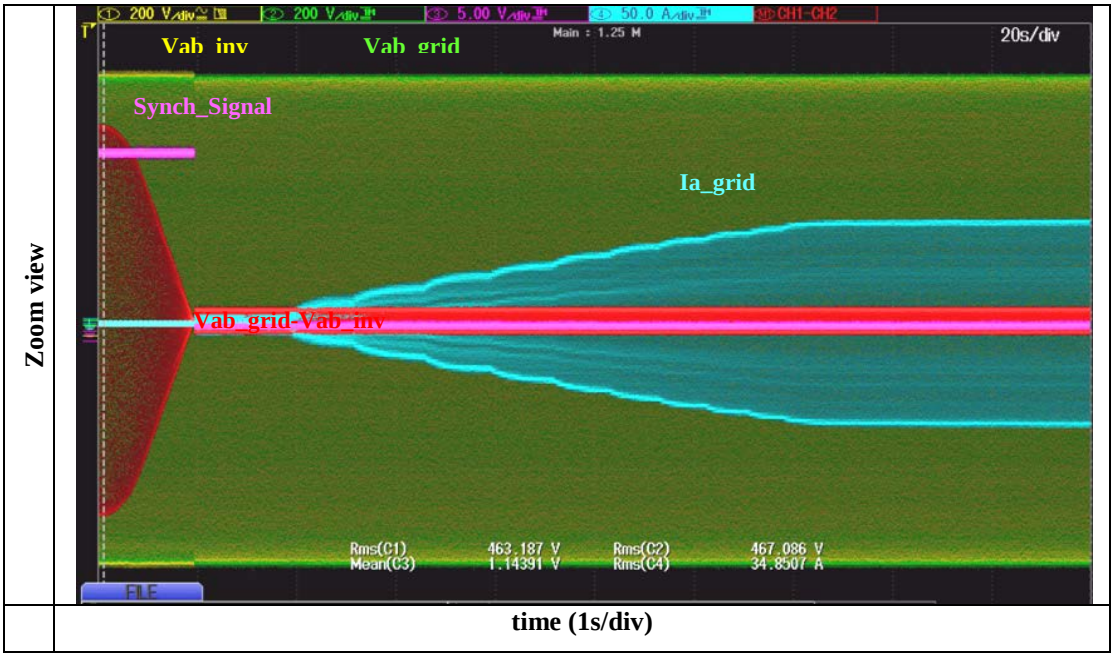

Figure 19: Grid Synchronization at McGuire AFB

Figure 20 shows an example of how the critical loads are served either from the inverter, the grid, or combination of both. In this case, a 5kW P_ref is given to the inverter so that the 10kW needed to serve the critical loads comes from the grid (importing). Then, P_ref is increased from 5 kW to 30 kW. In this case, the inverter is supplying 15 kW to the critical loads and 15kW goes to the grid (exporting).

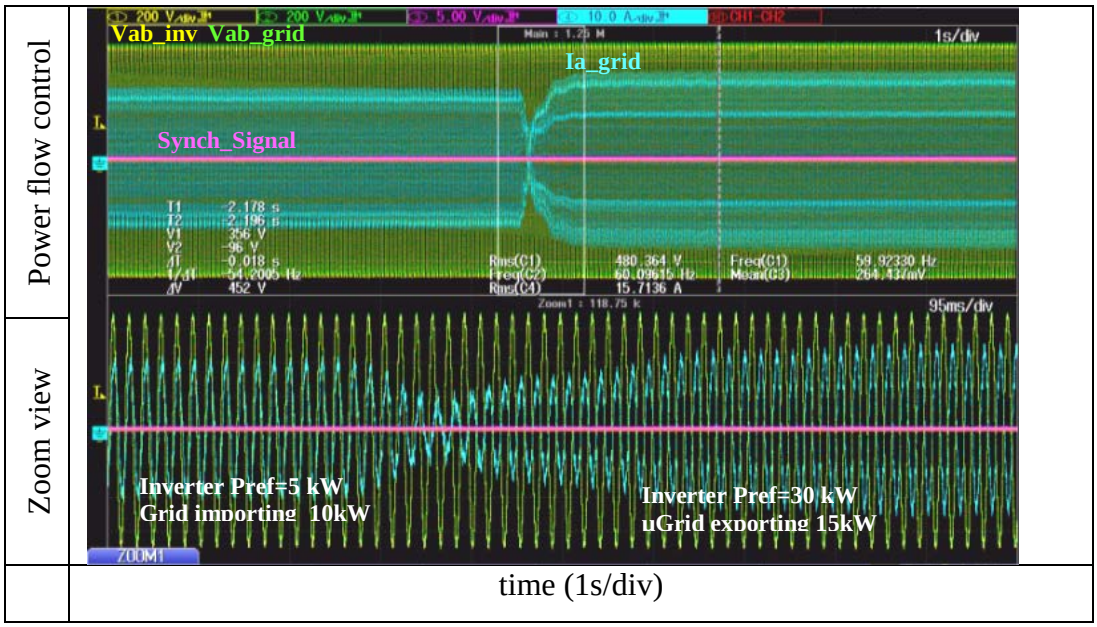

Figure 20: Power flow control

In the case where there is a *sudden loss of the grid connection* or commonly known as black-out, security of energy supply was also demonstrated. In this case, three events need to occur: (1) during this transient, the inverter should continue providing power to sensitive loads; (2) the inverter should detect that the grid is not present and open the smart switch; (3) finally, the inverter should wait for a minimum time to allow reconnection given that the grid is back. Figure 21 shows the experimental results gathered at the UTRC Labs where a blackout was simulated by opening a disconnect switch at the connection point to the grid. The data gathered during this test support the assessment of this performance objective. The zoomed view in Figure 21 shows that, after the grid is disconnected, the grid current (blue line) goes to zero. After a cycle and a half, the synchronization signal (pink line) indicates the smart switch has opened and the converter is working in standalone mode feeding all sensitive loads. Notice the power quality of the inverter voltage, indicating seamless transition of power to critical loads.

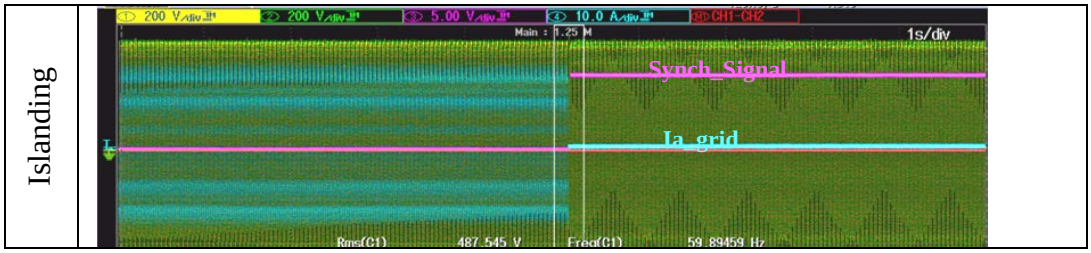

Vab_grid

Vab_inv

Zoom view	
	time (1s/div)

Figure 21: Grid Disconnection and Islanding detection tested at UTRC lab

Similar results were obtained at the McGuire AFB, illustrated in Figure 22, where the full connections, disconnection and reconnection sequence was captured. In this case, the grid was disconnected and the islanding detection algorithm opened the smart switch. The system waited for 30 seconds until the inverter was allowed to reconnect to the grid. Thus, the 'waiting period of time' could change. Then, the smart switch determined if the synchronization window was met and reconnected to the grid. After 10 seconds, the system started the maximum point tracking and exported any excess power to the grid.

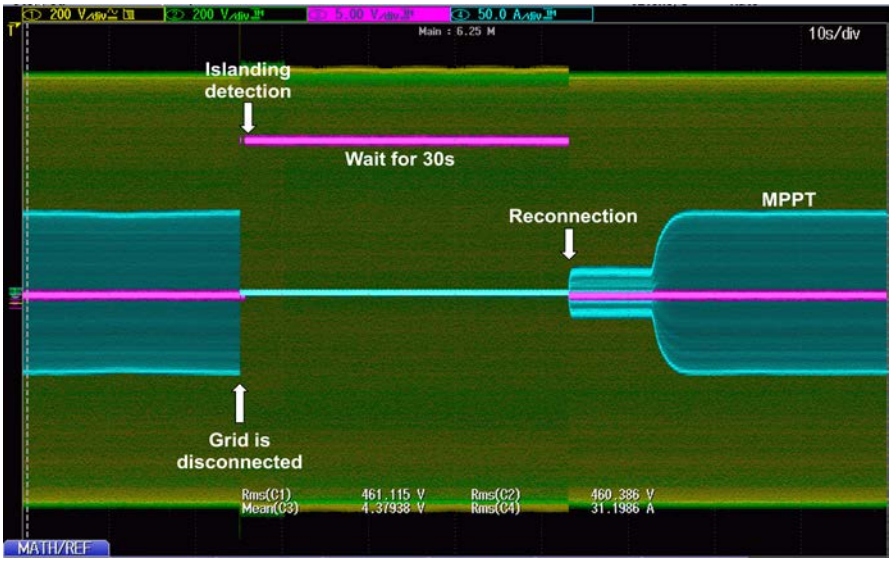

Figure 22: Grid disconnection and reconnection tested at McGuire AFB

6.1.2 Objective 2: Stable integration of multiple energy sources and storage with the electrical grid

The objective of stable integration of the source, energy storage, and the grid the system was partially assessed with that data obtained evaluating the previous performance objective - "Security of energy supply for sensitive loads". To fully demonstrate this objective, data was gathered that evaluated the system working in off-grid operation. In this case, the challenge was having full control over power generation and also the requirements for the energy storage, while trying to balance the power flow in the system. This performance objective was evaluated by testing various modes and load conditions, considering all possible energy and power levels of the components in the system. Integrity of the power switch was checked, and voltage and current waveforms were recorded and evaluated for the following modes and conditions:

- Grid-connected and grid island modes
- PV array under MPPT and no-MPPT modes
- Battery charge and discharging modes
- Various critical load levels, emulated by changing the load bank resistive levels.
- Transition between various modes were also be demonstrated.

Illustrative data, gathered to assess this objective, is shown in Figure 23 and Figure 24. In Figure 23, the load was increased from 10 kW to 15 kW at time t1 and the battery discharged more power (notice sudden increase in battery power 'output', violet line, at t1). At time t2, the load was stepped down from 15 kW to 5 kW. Under this condition, the maximum power that the PV could deliver was higher than the 5 kW load. The battery operation changed from discharge mode to charge mode while still maintaining the MPPT operation (until the battery SOC reached a maximum, after which the current output of the PV was controlled to balance power flows out of the MPPT condition). At instant t3, the load was stepped up back from 5 kW to 15 kW. Figure 23 clearly shows that, under all these operation modes, the dc bus voltage was successfully regulated to a desired voltage level while achieving unperturbed MPPT operation.

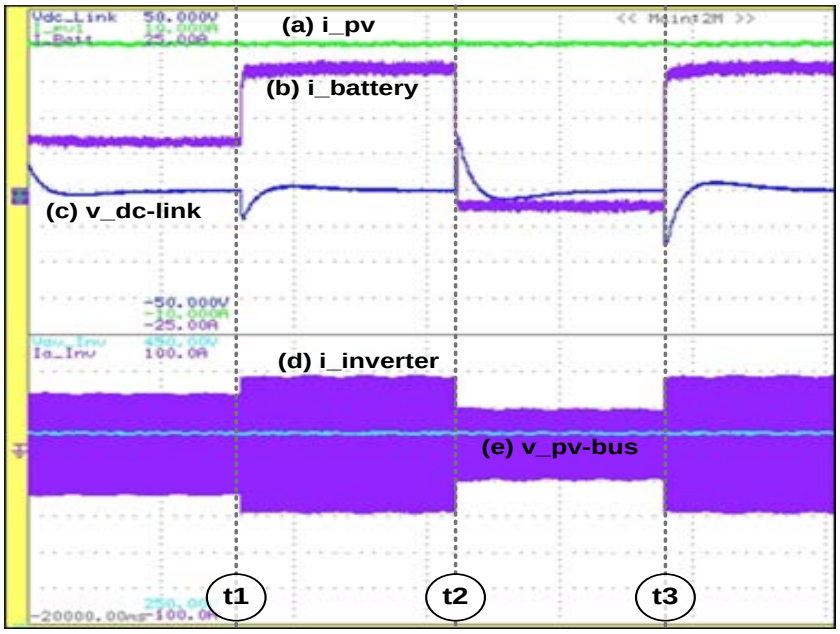

Figure 23: Battery operation in off-Grid mode (Time scale: 5s/div).

Similar assessment experiments were conducted, and data gathered at the McGuire AFB, as shown in Figure 24. In this case, the system was connected to the actual PV arrays and larger load steps were applied. Notice the battery initially provided the power requested by the load (red line) until the PV generation (blue line) was increased to meet the new load demand.

Figure 24: System performance in off-grid mode under large load variation at the McGuire AFB

The data obtained, by measuring the voltage waveforms at the inverter side, enabled the team to assess the voltage quality provided to the sensitive load while the grid was disconnected. In all cases, the measured voltage harmonic distortion exceeded the electrical standard requirements listed in IEEE std. 1547, where the maximum allowed voltage distortion is 5%. Figure 25 illustrates the 'no load' condition, which was the most challenging case and most difficult to control. Even during these tests, the system showed only 2.5% voltage distortion. As the load was increased, the distortion becomes lower than 1%.

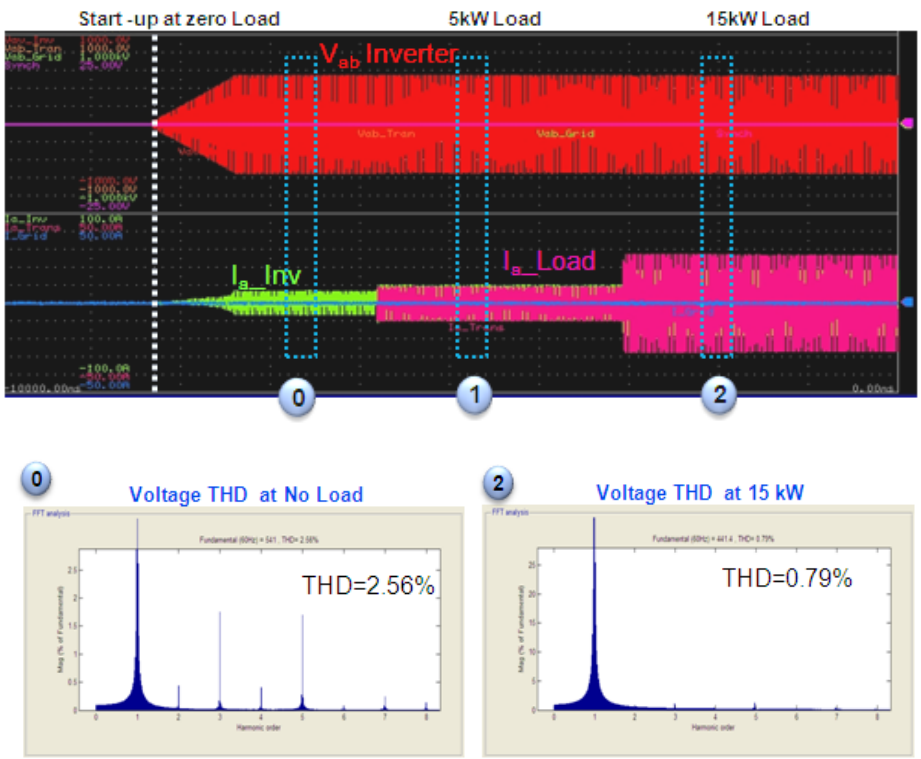

Figure 25: Voltage Harmonic distortion in off-grid mode

When the grid was connected, the voltage was imposed by the grid; therefore, the voltage distortion would be what the grid was at any given time, which is regularly less than 5%. Under "grid connected" conditions, even small distortion on the grid voltage could produce large distortion on the current injected to the grid. To avoid this issue, a harmonic regulator algorithm was implemented. Experimental results obtained at the McGuire AFB, shown in Figure 26, illustrate this phenomenon. In the upper graph, the harmonic regulator algorithm was deactivated to show a large current distortion. In the lower portion, the improvement obtained, when the algorithm was activated, is shown.

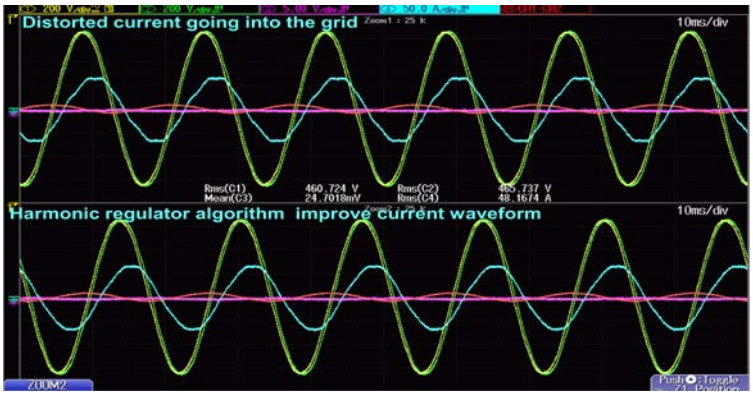

Figure 26: Harmonics regulators

Another important aspect, worth noting, is the robustness of the system against changes in solar *radiation energy levels*. Though the solar radiation changes slowly with the sun position, clouds can produce sudden changes on solar radiation levels that reach the PV array. Figure 27 shows inverter output power, PV output power and battery power in diverse operating conditions. Initially, the inverter worked off grid, providing power to critical loads and charging the battery. Then, the system connected to the grid and started maximum power point tracking (MPPT). A few seconds later, after reaching MPPT, a small cloud was passing over the PV array. Producing a sudden drop in power, some partial shading was observed until the system started producing maximum power again. Overall, through the entire process, the system remained stable and the battery was able to provide any mismatch between generation and load demand.

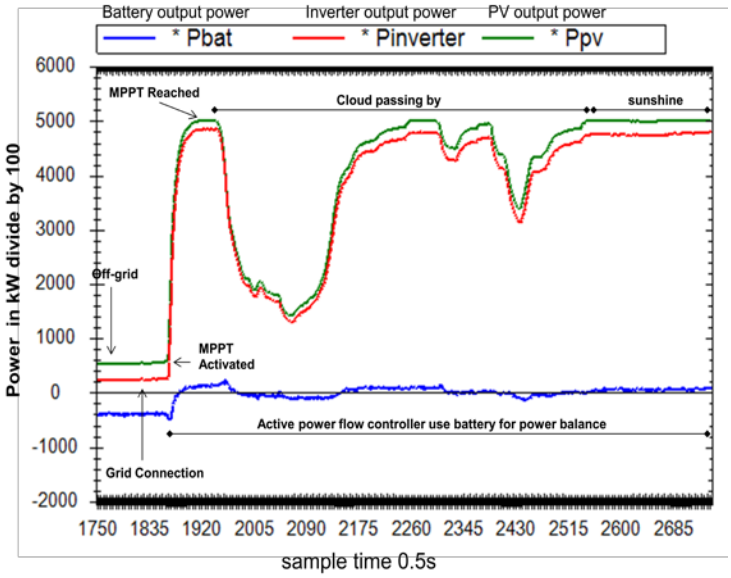

Figure 27: System performance under large solar radiation changes

Finally, verification of the power switch performance against voltage and frequency variations guidelines, provided by IEEE1547, has been performed at the UWM labs. The report provided by the UWM is included as Appendix E: Smart Switch Verification in Simulation.

6.1.3 Objective 3: System robustness to loss of communications

Special algorithms were developed and implemented within the UPC to detect the presence of the EMS and also the loss of communication with the EMS. The status of the EMS communication was utilized to develop appropriate logic and control algorithms were used to operate seamlessly under the loss of communication, or establishment of communication with the EMS. When the loss of communication to the EMS was sensed in the local controller, the power flowing in the microgrid was decided locally based on the rule-based approach and power balance criterion. The objective was that the critical loads were powered by the UPC, even in the event of communication loss with EMS. The secured power delivery, to the critical load under the loss of communication, was also assessed, under grid-connected as well as the islanded condition by simulating loss of communications between EMS and the UPC.

All tests were passed as successful; the microgrid could supply stable power to the critical loads. Furthermore, with reestablishment of communication with the EMS, the local controller was again able to follow the command from the supervisory control with stable and seamless transition. Figure 28 shows results when communication with the EMS was lost, and the local controller takes over the operation set points of the system, and runs successfully. This figure also shows the capability of the system to follow the EMS command, once communication is re-established. Finally, Table 9 summarizes the capabilities and performances of the system under communication loss and re-establishment.

6.2 Performance Assessment of Qualitative Performance Objectives

6.2.1 Objective 1: System protection and fault management

All software protections modes in the microgrid system were thoroughly tested to assess their satisfactory operation under conditions that include over-voltage, over-current, battery over and under charge and fault ground protections. The final results, under all the different fault conditions, are provided in Table 10.

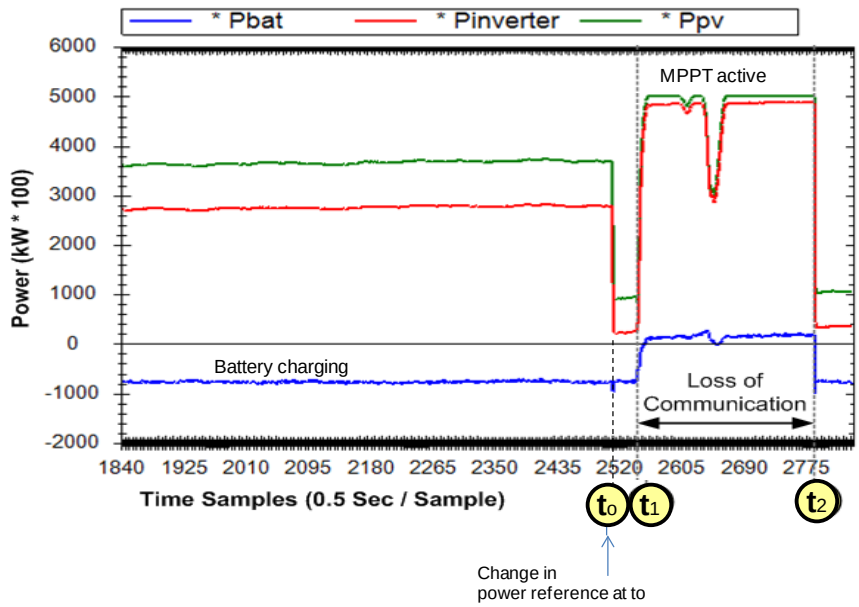

Figure 28: Operation of the system under loss of communication (between t_1 and t_2) and re-establishment of communication between UPC and EMS (at t_2).

Table 9: Summary of operational results under loss of communication condition.

Communication Status	Grid Connection	Command	Test Result	Comment
EMS connected	Connected	Inverter o/p power	Go	Can follow EMS
		Battery charge	Go	Can follow EMS
	Disconnected	Inverter o/p power	Go	Provides power to the loads
		Battery charge	Go	Can follow EMS
EMS disconnected (loss of communication)	Connected	Inverter o/p power	Go	PV operates at MPP*
		Battery charge	Go	Follows local charge controller
	Disconnected	Inverter o/p power	Go	Provides the load power
		Battery charge	Go	Follows local charge controller

*MPP: Maximum Power Point

Table 10: Summary of Software Fault Protection Tests

Protection	**Setting**	**Test**	**Comments**
Inverter Overvoltage	650 V	Pass	Peak line-to-line voltage, checked in all the three phases.
DC Link Overvoltage	750 V	Pass	none
PV Overvoltage	520 V	Pass	none
Battery Overvoltage	420 V	Pass	none
Inverter Overcurrent	190 A	Pass	Peak current, checked in all the three phases.
PV Overcurrent	100 A	Pass	Peak current, checked in both the interleaved phases
Battery Overcurrent	100 A	Pass	none
Fault ground detection	1 A	Pass	none
Battery high SOC	80%	Pass	Battery stops or limits charging to zero.
Battery high SOC	20%	Pass	Battery stops discharging.

6.2.2 Objective 2: Robust integration between EMS and UCB

A key objective of this project was robust integration between the EMS supervisory control and the local controls in the UPC. To realize the integration, a communication channel based on standard protocol was established between the EMS and UPC. The required system information was sensed within the UPC, at a very high sampling rate (1K samples per second). At a slower rate, the system information was passed onto the EMS by the UCB, with updates every few minutes. The system health, operation modes, and limits were also communicated to the EMS by the UCB. This information is used by the EMS to generate set point commands for operation, which are then communicated to the UCB for execution. This approach achieves robust integration of the EMS with UCB, as the UPC local controller can operate at real-time to control the physical system, whereas the EMS can use past, present and future information to steer the system along an optimum operation path. Different modes of operations are studied and rules and priorities are set up between the control command of the EMS and the UCB for robust and safe operation.

Summary of Results: To test for robust integration of the EMS with the UCB local controller, the battery charge current was selected as the variable for the out of bound command to the UCB. In this test, the battery charge current reference, as commanded by the EMS, was 100A, whereas

the maximum charge current limit for the battery was 45A. It was observed that, although the supervisory controller commanded a very high current, which was considered as out of bound, the local controller successfully limited the battery charge current to the safe operation value of 45A. This demonstrates the robust integration between EMS and UCB.

6.2.3 Objective 3: Ease of Use

Mentioned already, the demo at the McGuire AFB needed to be supervised at all times because the equipment was in a development phase, and has not yet achieved UL certification. However, an auto-start-up sequence was developed and implemented during the tests. In this arrangement, by pushing a START button, the dc-link capacitor was automatically charged from the battery, followed by boosting the capacitor voltage to the desired reference level. Furthermore, by pushing the START button, control for the PV array was enabled, followed by building the output voltage at terminal of the critical load to provide it the required power. The experimental results are show in Figure 29, substantiating the implementation of the auto-start-up sequence.

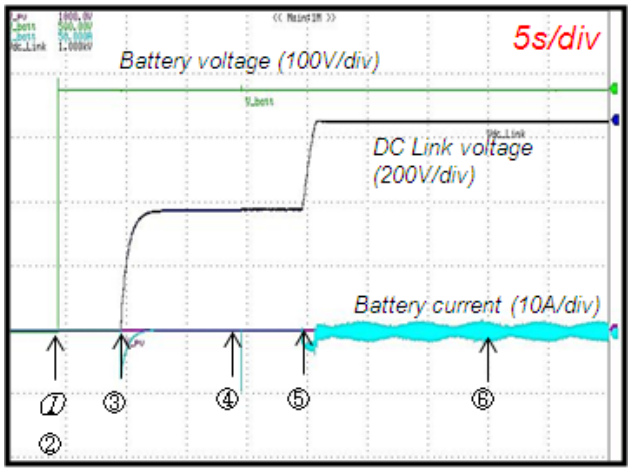

(b)

Figure 29: Experimental results showing various instants of the auto-start-up sequence.

6.3 QUANTITATIVE PERFORMANE OBJECTIVES (proved by simulation)

To understand and assess the benefits of the use of microgrid, simulations were conducted using the historical data collected from various DoD sites in different parts of the country. Specifically, the following hourly data for a year-long time period was estimated[7] for the three selected sites:

[7] Loads are estimated based on the buildings area, type and location of DoD installations. Measured hourly energy consumption data for DOD installations is not yet existing or available.

- Total electricity load (kW)
- Heating load (kW)
- Cooling load (kW)
- Solar data: Direct Normal Insolation (W/m^2)
- Wind speed (m/s)

In addition, the detailed and realistic utility costs, including peak and off-peak energy charge and demand charge, as well as gas cost for each site, were used. Based on these data, a suitable microgrid architecture was selected for each site, specifying the type and size of the equipment. Based on our analysis which is thoroughly described in the attached report (ref. [13]), architectures described in Table 11 were selected for each site under consideration. The architectures were selected based on the cost analysis (i.e., they provided optimal net savings when comparing their installed and maintenance cost to their contribution in reducing annual operating cost).

Table 11: Microgrid Architecture for Selected Sites

	NC	CO	OK	NY	TX
Grid	Yes, unlimited	Yes, unlimited	Yes, unlimited	Yes, unlimited	Yes, unlimited
Solar PV (KW)	35 MW	0	0	0	20 MW
Wind turbines(kW)	65 MW	70 MW	65 MW	55 MW	50 MW
CHP (microturbines+absChiller)	5 MW microturbines	17.5 MW microturbines	35 MW microturbines	27.5 MW microturbines	12.5 MW microturbines
Diesel generators	4 MW	2 MW	8 MW	12 MW	2 MW
Batteries, LiI (kWh capacity)	1 MWh	1 MWh	1 MWh	1 MWh	1 MWh

For a given architecture, several power utilization strategies were compared, through simulation, to understand the value of the microgrid. The strategies considered in this study were:

- Strategy 1: Grid only
- Strategy 2: Grid with renewable sources
- Strategy 3: Grid with a microgrid that include both renewable and non-renewable sources: hourly power utilization is determined using a rule-based approach

- Strategy 4: Grid with a microgrid that include both renewable and non-renewable sources: hourly power utilization is determined using an optimization-based approach that minimizes operation cost

The benefits of the microgrid were determined through the comparison between Strategy 1 and Strategy 4. Furthermore, the value of optimization-based control strategy will be determined through the comparison between Strategy 3 and Strategy 4. A summary of results relative to the performance objectives are summarized in the following sub-sections.

6.3.1 Objective 1: Decrease Environmental Impact

Environmental impact is measured by CO_2 emission reduction, through the use of microgrid, to meet the total electricity load. The CO_2 emission, by Strategy 1 and Strategy 4 above, was computed and the difference between the two shows the environment benefits of the microgrid. Specifically,

$$Decrease\ of\ \ Environment\ \mathrm{Im}\ pact = \frac{CO_2(Strategy\ 1) - CO_2(Strategy\ 4)}{CO_2(Strategy\ 1)},$$

Where:

$$CO_2(Strategy\ 1) = R(grid) \cdot P^1(grid)$$
$$CO_2(Strategy\ 4) = \sum_{i \in E^4} R(i) \cdot P^4(i)$$

E^j is the set of microgrid equipment used by Strategy j , the external electrical grid and other fuels that may be used, including natural gas.

R(i) is the emission rate of fuels used for equipment i, external utilities as reported by DoE.

$P^j(i)$ is the total yearly power generated by equipment i in Strategy j

<u>*Summary of Results*</u>*:* It is assumed that there is no emission generated when renewable sources and battery are used. For other equipments, CO_2 emission rates are multiplied by the power generated to compute the total annual emission. The emission rates to be considered depend on the data taken, as references and the equipment considered, ranging from 580 kg of CO_2/MWh to 689kg of CO_2/MWh for the electricity from the grid, estimated for a U.S. national average (Tables 3 and 4 in [14]), 503 kg of CO_2/MWh to 650 kg of CO_2/MWh for diesel generator, and 352 to 725kg of CO_2/MWh for CHP [15] . The numbers used for this estimation are

conservatively taken as 689kg of CO_2/MWh for the electricity, 650 kg of CO_2/MWh for diesel generator, and 352 to 725kg of CO_2/MWh for CHP.

The average result shows that, compared with grid only as the baseline, the CO_2 reduction under optimization-based control strategy is between 30-40%, as shown in Table 12.

Table 12: Average annual CO2 Emission Reduction

	NC	CO	OK	NY	TX
Scenario 1 (kg)	$2.7x10^7$	$9.0x10^7$	$13x10^7$	$11x10^7$	$6.2x10^7$
Scenario 4 (kg)	$1.8x10^7$	$5.9x10^7$	$8.4x10^7$	$7.3x10^7$	$4.0x10^7$
CO2 Reduction	33%	35%	36%	35%	36%

Compared to the simple rule-based strategy, the optimization-based scenario provides an additional 3.0%, 5.0%, 5.5%, 3.2% and 7.8% CO_2 emission reduction, respectively, for each site. If an additional constraint is specified that the CO_2 emission reduction for an optimization-based scenario must be > 5%, when compared to the simple ruled-based scenario, then alternative microgrid architecture needs to be considered for ite 1 and 4. Table 7 summarizes the alternative architectures for the two sites.

Table 13: Microgrid Design for 5% CO_2 Emission Reduction by Scenario 4

	NC		NY	
	Design 1	**Design 2**	**Design 1**	**Design 2**
CHP size	5 MW	10 MW	27.5 MW	35 MW
Diesel generator size	4 MW	0 MW	12 MW	4 MW
Average CO2 reduction by microgrid	32.6%	32.8%	34.6%	34.7%
Average CO2 reduction by optimization	3%	6%	3.2%	5.3%
Net savings	$655,135	$549,842	$3,382,393	$3,309,019

As can be seen from the above table, to increase the value of the optimization-based scenario for reducing CO_2 emission, the net savings of the alternative microgrid design must be reduced. As alternative scenarios do not affect the total CO_2 emission reduction by microgrid, it is determined, through analysis, that the original microgrid design is preferred, though it does not meet the constraint of 5% emission reduction by optimization strategy.

6.3.2 Objective 2: Reduce energy consumption by external utilities

The percentage of energy provided by renewable sources was calculated for each case shown in Table 11. Let R be the subset of equipment with renewable sources. Then, the total energy over a year, generated by renewables in relation to the total power required (equivalent to the power supplied) at the DoD installation is:

$$R = Fraction\ of\ \mathrm{Re}\,neable\ Energy = \frac{\sum_{i \in R} P(i)}{\sum_{i \in E} P(i)}$$

Strategy 4 was used to determine the reduced energy consumption by external utilities.

<u>*Summary of Results:*</u> The table below summarizes the fractions of renewable energy. As the optimal microgrid architecture is selected, based on the constraint that renewable sources should contribute at least 30% of the total energy consumption, the resulting renewable fraction is very close to the targeted 30%. The reason that fractions are not much higher than the target 30% is because the renewable sources are still not cost-effective. Therefore, increasing the fraction of renewable sources can significantly increase the installed cost, resulting in a reduced net savings for the microgrid system.

Table 14: Annual Energy Consumption (MWh/year)

	NC	CO	OK	NY	TX
Total energy (MWh/year)	39,050	130,940	188,296	161,051	90,107
Renewable energy (MWh/year)	11,757	40,563	57,710	51,032	27,269
Renewable fraction	30%	31%	31%	32%	30%

Other than renewable sources, the microgrid system is not able to reduce its energy consumption without demand management. As demand management is out of the scope of this study, the focus was to show the value of the microgrid and its energy management system through reduction of the annual operating cost, which is described next.

6.3.3 Objective 3: System economics

This section has been included in Section 7 “Cost Assessment”.

7 COST ASSESSMENT

7.1 COST MODEL

The optimal microgrid architecture varies, depending on many things, including: requirements, location, available budget, stages of operation, mode of operation, building targets, energy usage and environmental conditions, etc. The cost and savings will then depend on the selected microgrid architecture and the utility rates. Table 15 presents a summary of the estimated cost of energy microgrids for each major component. Table 15 also provides a description on how to interpret the cost and the available sources of information. The total cost of a microgrid, as previously mentioned, is very dependent on (i) the topology selected for microgrids and (ii) the economies of scale for its different components. In general, the initial cost of a microgrid is represented by the summation of the first four rows in Table 15 (Installed cost of equipment+ Software cost + Site preparation + Electrical and civil work). While the software cost may be negligible, the installed cost of equipment may vary widely from $400/kW (installed price of CHP with subsidies) to $8000/kW (e.g. install price of solar PV without subsidies). The cost of the electrical and civil work also varies widely depending on each site and the type of work required. The annual operation and maintenance cost, and annual O&M, is calculated based on the maintenance cost of equipment, the replacement cost of the multiple pieces of equipment within the microgrid system, and the utility costs. These costs are presented in Table 15. This cost may go from zero (e.g. if batteries, wind turbines or solar PVs are installed, without any maintenance considered), to a few cents per kWh (if gas turbines are considered, or maintenance is included).

The reader of this report must consider that the cost of future microgrids is not a direct extrapolation of the cost of the ESTCP project (described in this report and presented in Table 15). These cost are not equivalent; the project cost for each of the materials acquired differs when compared to the cost of true microgrids because: 1) the ESTCP project was a research project, where the highest quality elements were purchased for the converters, auxiliaries and protection switches, transformers and switches; 2) The system was overdesigned, to ensure all protection and safeties would be in place, in case a test or experiment stretched the limits of performance; 3) Given the constructed microgrid was small in scale and was one-of-a-kind rather than a product, there was no purchasing deal with manufacturers or technology providers, with negotiated discounts; 4) There were not subsidies, and, as a result, economies of scale apply; 5) it

is expected that the cost of all the equipment considered will decrease as the economies of scale and continuous learning processes are reached.

Table 15: Cost Model for Energy Microgrids

Cost Element	Data Tracked During the Demonstration	Estimated cost
Equipment installed costs	Estimates are based on best information available in open literature for current and projected cost of energy sources and storage components.	***Energy Conversion devices***, $300/kW ***Sample installed cost energy sources*** Solar PV, average $8000/kW, [19] see Figure 35 Wind Turbines, average $2000/kW [18] , see Figure 33. CHP equipment $800-1200/kW [17] . see Figure 36 Diesel generators $400-800/kW ***Sample energy storage*** Projected ~$1000-1500 /kWh (actually paid $3600/kWh). ***Power switch and auxiliaries*** ~$5000 (for 100kW and above)
Software costs (and computer)	Cost of software estimates are based on prices that UTRC paid for all programming and optimization software that may be required in DoD installations to provide optimal microgrid energy management.	The software that UTRC developed through a third party can be re-used for any application (e.g. cost of development was $20K, in the future this is $0) Computers and visualization monitors: ~$1000/computer ; $300/ monitor
Site preparation	The demo did not incur site preparation cost beyond electrical wiring and battery vent piping. In other situation, were a microgrid and all its components need to be installed, site preparation could be a considerable cost. Specially, for example, the site preparation required for wind turbines, which is usually included in their installed cost.	The siting, civil construction and electrical wiring cost depends on the selection of type and size of equipment, the existing infrastructure for microgrid location and the special distribution or location of the individual pieces of equipment and the critical loads or other loads to be supplied.
Electrical wiring cost	Electrical wiring cost is estimated either based on the price UTRC paid for electrical wiring at McGuire AFB. This costs could be reduced for commercial large applications rather than scientific demos.	Electrical wiring and electrical diagrams cost was ~$50K for this one-time migrogrid demo, with an installed microgrid a ~ 0.5 miles or wires. However, this cost varies depending on the T&D lines that need to be set-up in

		the base, and the selected microgrid architecture and special distribution. For example, if transmission lines are required, their estimate cost is $1M/mile.
Civil work cost (e.g. structures, piping, etc.)	Civil work cost is estimated either based on the price UTRC paid for it at McGuire AFB. This cost could be considerably reduced for commercial large applications rather than scientific demos.	In the demo case, this cost is combined with the electrical wiring, except for a battery vent cost. As in the electrical wiring and siting costs cases, the siting and electrical wiring cost depends on the selection of type and size of equipment, the existing infrastructure for microgrid location and the special distribution or location of the individual pieces of equipment and the critical loads or other loads to be supplied.
Maintenance cost	The maintenance cost of each microgrid is estimated based on the maintenance schedule and cost of each equipment comprising the microgrid, including transmission and distribution lines and software. Stochastic events (e.g. the cost of a stochastic power outage) are not considered.	Each of the components of a microgrid has a lifetime between 10-20 years. Minimum maintenances cost of each equipment can be included: ***Energy Conversion devices*** ~$ 0. ***Sample O&M cost energy sources*** **Solar PV**, average $7/kW/year for chrystalline and $21/kW/year for thin film , [19] see Figure 34 **Wind Turbines**, average $421/kW/year [18] CHP equipment $21/kW/every 4 years [17] . **Diesel generators** $100 /kW/year [17] . ***Sample energy storage*** ~$1000-1500 /kWh (actually paid $3600/kWh). Potential future flow batteries $1000 /kWh ***Power switch and auxiliaries (1 or 2 per microgrid)*** NA
Replacement cost (Lifetime related)	The replacement cost of the system over a given period of time 'N years', is estimated based on the lifetime of individual equipment and the number of replacements over the N years.	The initial cost if re-incurred at the replacement times, estimated as: Power conversion ~ 10 years Power switch: ~ 20 yeas All energy source components ~ 20 -25 years.
Operational (fuel) cost	The fuel costs of the system is estimated based on the fuel usage	Microgrids could be purely 'renewable' base energy systems.

	for each individual equipment, when the usage is optimized. The fuel cost depends on the inflation rate and the location of the microgrid.	If equipment such as CHP or diesel generator are added.
Facilities managers training cost	Estimate of training costs for facility personnel on usage of the equipment and operational adjustments to both energy microgrid equipment and energy management system.	The system should be automatically operating. The operator should receive the training to be able to visualize and interpret results only. For example, the cost of one day of training would be about $1000/person in labor hours. Additional training materials are not required.

7.2 COST DRIVERS

The architectural selection of energy microgrids depend on:

- *Security of supply objective:* The size of the energy sources and energy storage will vary depending on the size of the critical loads, the expected or required 'autonomy' time duration which the energy microgrid should supply energy to the critical loads, and the required 'transition' times, or times during which the critical loads could be without power supply when the microgrid is transitioning from grid-connected to island modes. This last requirement would determine if a generator could be used or not for transition times or supercaps or batteries are required to avoid transition times.
- *Site current and projected loads:* The thermal and electrical loads and profiles (including total energy and peak consumptions) of the site where the microgrid is installed will determine the size of the energy source equipment needed.
- *Site Location:* The location is important when considering natural resources (e.g. solar isolation, wind, geothermal, biomass, etc.) as drivers of the selection of equipment.
- Current and projected energy costs: Utility costs, including electricity structure, national gas, biogass, diesel, etc. are key when considering microgrid size, equipment type and savings. For example, microgrid-driven CHP equipment requires natural gas; however, the payback times of CHP equipment are usually beyond 5 – 10 years in locations where the cost of natural gas is comparatively more expensive than the cost of electricity.
- *Incentives and subsidie*s will make one option better than other competitive alternatives. For example, even when the installed cost of solar PV is very expensive (see Table 19),

governmental incentives have usually driven their installation in many places around the world.

- *Existing infrastructure:* Even when some equipment may appear to have lower installed cost, there are piping and T&D lines that may be required. For example, the wind resource is very location specific, and sometimes may be more available as far as a few miles away from the consumption area. If a transmission lines is required to transport the energy, the cost of wind becomes prohibitively more expensive.
- *Redundancy:* The cost of all the components required to integrate into an 80 kW smart switch is about $5,000. The most expensive items are the SCR assembly ($3,600/unit) and the SEL relay ($750/unit). Other minor components include current and voltage sensors, fuses and panels. As observed, the cost of the power switch is very small compared to the microgrid system, which usually requires expensive energy sources and storage. Hence, if the application requires a higher level of security of supply, the additional impact of adding redundant switches would be minor when compared to the total microgrid system cost, which could be millions of dollars depending on the size and type of equipment. A parallel redundant switch would decrease the probability of failure during reconnection (i.e. failure to close), while the addition of a switches in series would decrease the probability of failure during power outage disconnection (i.e. fail to open).

7.3 COST ANALYSIS AND COMPARISON

A study was conducted to evaluate the economic and environmental benefits of microgrid and the associated supervisory control (ref. [13]). A summary of that study is presented in this section in relation with *Quantitative performance Objective 3, Systems Economics*.

7.3.1 System economics (Quantitative performance Objective 3)

Annual historical load and weather data were collected from five military sites in across the U.S.; these sites represent various weather conditions, utility rates and load usage. A microgrid system that includes storage and renewable sources was selected for each site, based on weather (solar radiation and wind speed) and loads data. The select microgrid systems provide optimal net savings under the constraint that renewable energy must provide 30% of the total annual energy required by each site. Table 16 lists the microgrid system selected for each site. As has been noted, some of the values are large and it may not be possible to install and maintain them at

DoD sites (e.g. 35 MW solar PV and 65 MW wind turbines). However, these selections were based on real loads and renewable resource availability in DoD cases, and are able to supply the power required by 2007 Energy Act and EO 13423.

The cost savings through the use of the microgrid are calculated by comparing the operating and maintenance cost for different strategies. The operating cost for each strategy is defined by:

$$OpCost(Strategy\ j) = \sum_{i \in E^j} OpEquipCost(i)$$, where:

OpCost(Strategy j) is the total operating cost for Strategy j, and

OpEquipCost(i) is the operating cost incurred by equipment i, which depends on the utility/fuel cost and the power generated by the equipment.

The cost savings, generated by the microgrid, is calculated by $\frac{OpCost(Strategy\ 1) - OpCost(Strategy\ 4)}{OpCost(Strategy\ 1)}$

And the cost savings generated by the use of optimization-based control is calculated by:

$$\frac{OpCost(Strategy\ 3) - OpCost(Strategy\ 4)}{OpCost(Strategy\ 1)}$$

Table 16: Microgrid Architecture for Selected Sites

	NC	CO	OK	NY	TX
Grid	Yes, unlimited	Yes, unlimited	Yes, unlimited	Yes, unlimited	Yes, unlimited
Solar PV (KW)	35 MW	0	0	0	20 MW
Wind turbines(kW)	65 MW	70 MW	65 MW	55 MW	50 MW
CHP (microturbines+ absChiller)	5 MW microturbines	17.5 MW microturbines	35 MW microturbines	27.5 MW microturbines	12.5 MW microturbines
Diesel generators	4 MW	2 MW	8 MW	12 MW	2 MW
Batteries, LiI (kWh capacity)	1 MWh	1 MWh	1 MWh	1 MWh	1 MWh

Lifecycle cost of microgrid equipment and years to payback were calculated to provide justification of the investment in the microgrid. Specifically, life cycle cost of equipment *i* is calculated using the following formula in NIST Building Life Cycle Cost Program:

$$LCC(i) = \sum_{t=0}^{T} \frac{InsCost^t(i) + OM^t(i)}{(1+r)^t}$$, where:

LCC(i) is the net present value of life cycle cost of equipment i;

$InsCost^t(i)$ is the installation cost of equipment i in year t;

$OM^t(i)$ is the operations and maintenance cost of equipment i in year t;

r is the discount rate used to adjust cash flow to present value;

T is the life time of equipment i.

The net saving is then calculated by NS = Operations Savings – LCC =

$$\sum_{t=0}^{T} \frac{OpCost(Strategy\ 1) - OpCost(Strategy\ 4)}{(1+r)^t} - \sum_{i \in E^4} LCC(i)$$

The years to payback will be calculated by

$$\frac{\sum_{i \in E^4} LCC(i)}{OpCost(Strategy\ 1) - OpCost(Strategy\ 4)}$$

The estimation of the economics of a large-scale microgrid system in DoD installations and comparison with centralized electrical systems is presented in Section 7.3.

Results, System economics. For the microgrid architectures selected in Table 16, the annual operating costs for four scenarios were computed and compared to the microgrid values and associated optimization-based supervisory system. For a given location and microgrid architecture, several power utilization strategies were compared (through simulation) to understand the value of microgrid. The strategies considered in this study were:

- Strategy 1: Grid only
- Strategy 2: Grid with renewable sources
- Strategy 3: Grid with a microgrid that include both renewable and non-renewable sources: hourly power utilization is determined using a rule-based approach
- Strategy 4: Grid with a microgrid that include both renewable and non-renewable sources: hourly power utilization is determined using an optimization-based approach that minimizes operation cost

The benefits of the microgrid were determined by comparing Strategy 1 with Strategy 4. Furthermore, the value of optimization-based control strategy was determined by comparing Strategy 3 with Strategy 4. A summary of results, relative to the performance objectives, is summarized in the following sub-sections. Figure 30 plots the annual operating cost for each site and each scenario for the selected architecture.

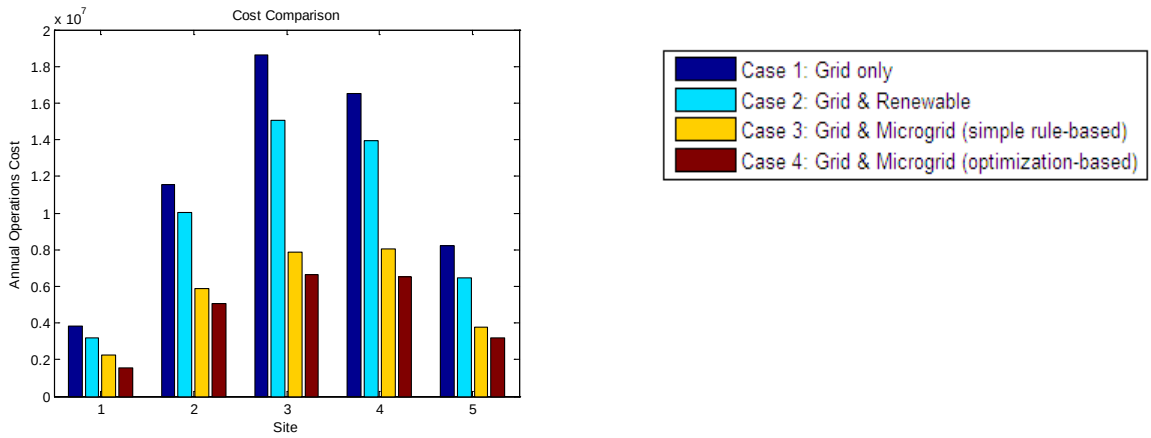

Figure 30: Annual Operating Cost

Table 17 summarizes the annual operating cost savings for each site and each scenario compared with baseline scenario 1. With the architecture selected and the cost specified, the results show that microgrid can provide operating cost savings in the range of 55-65%. The contribution of optimization-based supervisory control is the differences between scenarios 3 and 4, which ranges from 6-19%. The differences in the contribution depends on the cost structure as well as load data. The payback of the non-renewable microgrid equipemt including CHP, diesel and battery ranges from 3.5-6 years.

Table 17: Annual Cost Savings of Microgrid

	NC	CO	OK	NY	TX
Scenario 2 (Grid & Renewable)	17%	13%	19%	16%	21%
Scenario 3 (Grid & Microgrid, Rule-based)	41%	49%	58%	51%	54%
Scenario 4 (Grid & Microgrid, Optimization-based)	60%	56%	64%	61%	61%

The payback time of the non-renewable microgrid equipment including CHP, diesel generator and battery ranges from 3.5-6 years. It is calculated based on the ratio of total equipment cost to the annual operating cost savings.

Table 18: Microgrid Payback Time

	Total Equipment cost	Annual Savings	Payback Time (Year)	Annualized ROI
Site 1: NC	$9,185,000	$1,623,454	5.66	0.68
Site 2: CO	$18,132,000	$4,933,024	3.68	1.32
Site 3: OK	$38,187,000	$8,422,868	4.53	0.90
Site 4: NY	$35,214,000	$7,331,548	4.80	0.86
Site 5: TX	$13,869,000	$3,356,026	4.13	1.02

8 IMPLEMENTATION ISSUES

This section provides a description of challenges, lessons learned, and information to be considered in future developments and implementation of this technology, and also in other projects that specifically relate to demonstrations and installations on DoD bases. The topics for discussion include:

-New regulatory and standards

-Required access to Internet or external communication networks at DoD sites

-Approval Process and Access to Information at DoD Sites

-Economics

-Technical

Each of these topics are explained below in the following subsections.

8.1 Regulations, standards, and permits required to implement the technology

Regulations found in the National Electric Code (NEC) and OSHA 70E can be applied to two key areas of the system: (1) application of PV solar systems, and (2) application of high voltage/energy batteries. PV systems cannot be "turned off" (except from MPPT control). As such, they present challenging implementation issues. Regulations from NEC and other international authorities, like IEC, are moving towards a unified code for dealing with PV installations, however, these codes are still evolving. Grounding requirements in the U.S. are not consistent with European standards. Residential vs. commercial requirements seem to be evolving also. This presents an uncertainty for equipment providers which may inhibit growth and innovation.

As mentioned above, PV systems high energy battery systems cannot be "turned off". This presents challenging implementation issues. Regulations from NEC and other international authorities, like IEC, are challenged to keep pace with the development of these new battery technologies and requirements for safe installation and operation. Application of existing regulations, which are currently mostly targeted at lead-acid batteries, remains a challenge for new battery technologies. The key lesson learned from this is that defining and implementing adequate safety provisions, including venting issues, for new batteries and microgrid installations

requires new regulations and standards. Currently, this presents a challenge to system integrators seeking to provide safe, cost effective solutions.

8.2 Required access to Internet or external communication networks at DoD sites

Advanced energy systems, including energy microgrids, require communications between several sub-systems and with weather channels. Although the latter could be partially resolved with local weather stations, there are still prediction components that should be made to correlate with the weather channels. In DoD installations, it is not possible to achieve the level of communications required to take full advantage of advanced energy management systems (for microgrids and for building controls) given that a special approval process lasting over over one year (which could exceed the period of performance of the ESTCP projects) is needed. This is a barrier that would need to be pre-approved for ESTCP projects, to fully demonstrate the project potential, requiring communications with the external world or with other system. The key lesson learned from this is that, for future projects, one should start the approval process at an earlier stage, at least one year before the communications needs to be implemented, and work with ESTCP and the person responsible at the installation site to obtain the required permits.

8.3 Approval Process and Access to Information at DoD Sites

Specific to this ESTCP project, the requirement to demonstrate in DoD installations proved somewhat challenging. First, the performance of DoD energy managers was related to high-impact energy savings on the entire base. In our experience, there was little natural incentive for the base to provide support to an ESTCP project of the nature presented in this report. In fact, we experienced reluctance from them to provide additional information without complete control of its use. Second, the responsibilities and liabilities for an ESTCP funded project were not made entirely clear to the energy managers at McGuire AFB. As a result, it took a long time to get approval for the project to move to McGuire AFB. No additional information relative to building loads or energy bills was provided. We foresee, however, a high probability that for later ESTCP projects implemented, the managers at DoD installations will be more collaborative. More direct communication between ESTCP managers and energy managers may help to accelerate this positive change.

8.4 Economic Challenges and Lesson Learned

Except for the high electric energy storage devices (EES), all elements of the energy microgrids were available as off-the shelf equipment. The difficulty in developing energy microgrids is in the integration of components and control technologies, not in the components themselves. Renewable-based energy microgrids with EES, however, are expensive. As a result, it is a challenge to demonstrate a good payback with the present installed prices of these technologies. Some other components, for example wind turbines, are becoming more competitive in certain areas of the country, with high electricity prices and high wind availability. EES can make renewable sources more competitive by dealing with intermittencies. EES is adequate for high energy/high power applications. At the grid level, however, they are not commercially available yet, and the industry is rapidly evolving towards providing technical and economically sound solutions. The lesson learned in this area is that if the equipment is not subsidized and/or already installed, energy storage capable of providing power to critical loads for long periods of time is economically infeasible. New energy storage solutions with long lifetimes and performance for large energy and power applications are needed.

8.5 Technical Challenges and Lessons Learned

The communication channel between the battery controller, the Battery Management System (BMS), and the microgrid system local controller, Universal Control Board (UCB) is quite susceptible to the switching noise generated by the power converters (UPC). In this case, CAN communication system is used for the information exchange between the battery and the UCB. It was observed that, at a higher power level, the communication was getting disrupted due to the noised created by the power converter switches. In this project, during the development of the control techniques for the photovoltaic arrays, a Solar Emulator was used in the laboratory environment for testing. The Solar Emulator acted essentially as an electronic power supply, operating as a current controlled voltage source. Due to limitations of the design, and realization of the Solar Emulator in this fashion, the response band-width is very slow compared to actual silicon crystalline PV panels, physically present also at the McGuire AFB. The solid state PV sources offer much higher bandwidth and, hence, much faster response to the power converter operation. The control algorithm to track the Maximum Power Point (MPP) could therefore have

much faster operation for the actual PV panels. To achieve successful implementation of the control algorithm for the real PV panels the following measures can be taken.

- Have the appropriate control variables for the PV controller available for tuning under the field test conditions.
- Use pilot PV arrays in the laboratory, for development and testing of the control algorithms.

Another, more technical, lesson learned was that the objective of seamless transitions from multiple operating modes was possible only when using real time data from the inverter terminals, and power flow data. When trying an alternative method, based on State machine, implementation proved cumbersome and difficult to apply. Batteries, in general, need standardization in terms of power electronics, communication protocols and data available to the user. Today's batteries require custom development in all of these areas that make the system more expensive and less reliable.

Another major lesson learned was that demonstration of the concept itself, a power electronics conversion system capable to work grid connected, grid independent, and transition seamlessly, was a challenging problem where the team had to develop a control algorithm capable of operating in multiple modes, without changing control structure or human intervention

8.6 Supervisory control:

Communication with other modules required (1) a way to either retrieve data from a local weather station or internet access for national weather forecast website, and (2) a way to retrieve data from building management system for load data. For demand management, this needs to be a two-way communication. In addition, communication with local controller needs careful design and additional testing. Another project fully dedicated to supervisory system development is required.

9 REFERENCES

[1] Office of the Under Secretary of Defense For Acquisition, Technology, and Logistics, Report of the Defense Science Board Task Force on DoD Energy Strategy, *"More Fight – Less Fuel"*, Feb 2008.

[2] Department of Defense Facilities and Vehicles. Energy Use, Strategies and Goals, August 6, 2008. http://www.govenergy.com/2007/pdfs/procurement/Hancock_Procurement_track_S3.pdf

[3] DoD Base Structure Report. Fiscal year 2008 baseline (Summary of DoDs Real Property Inventory)

[4] DoD Facilities and Vehicles Energy Use, Strategies and Goals – Program Overview, GovEnergy 2008, August 6, 2008.

[5] Army Key Energy Initiatives. http://army-energy.hqda.pentagon.mil/renewable/renewable.asp

[6] "The US Department of Defense: Valuing Energy Security", Journal of Energy Security, June 2009. http://www.ensec.org/index.php?option=com_content&view=article&id=196:the-us-department-of-defense-valuing-energy-security&catid=96:content&Itemid=345

[7] US Patent US7116010B2/US20060208574A1, Control of distributed energy resources

[8] US Patent US20070129110A1, Interface switch for distribute energy resources.

[9] Patent 7116010 Issued on October 3, 2006, Control of small distributed energy resources.

[10] S. Kameswaran, S. Krishnamurthy, S.M. Oggianu, L. Arnedo and V. Blasko. *"Optimization Formulations for Supervisory Control and Coordination of Microgrids"*. To be published in OPTIMAL CONTROL APPLICATIONS AND METHODS Optim. Control Appl. Meth. 2010; 00:1–28 Published online in Wiley InterScience (www.interscience.wiley.com). DOI: 10.1002/oca

[11] Arnedo, L; Dwari, S. Blasko, V. *"Hybrid Solar Inverter Based on a Standard Power Electronic Cell for Microgrids Applications"*, to be presented in Energy Conversion Congress and Exposition (CCE 2011), Nov. 17-22, 2011, Phoenix. Arizona.

[12] S. Dwari, L. Arnedo, S.M. Oggianu, *"High Performance Maximum Power Point Tracking Techniques for Photovoltaic Energy Conversion Systems"*, APEC - The Applied Power Electronics Conference and Exposition 2012.

[13] Yiqing Lin "Economics Study on Microgrids and Optimization-based Energy Management System"

[14] ENERGY STAR Portfolio Manager: Methodology for Greenhouse Gas Inventory and Tracking Calculations, http://www.energystar.gov

[15] W. Morgantown. Emission rates for new dg technologies. The Regulatory Assistance Project, May 2001. http://www.raponline.org/ProjDocs/DREmsRul/Collfile/DGEmissionsMay2001.pdf.

[16] http://www.dieselserviceandsupply.com/Diesel_Fuel_Consumption.aspx.

[17] Ryan, W. "Cogeneration for Confectioners", The Manufacturing Confectioner, December 2004, Page 101-107.

[18] Ryan Wiser, Lawrence, Mark Bolinger, 2009 Wind Technologies Market Report. "2008 Market Report" http://www.nrel.gov/docs/fy10osti/48666.pdf NREL/TP-6A2-48853. September 2010

[19] Study of Economics and Performance of Solar Photovoltaic at the Former St. Marks Refinery in St. Marks, Florida. Lars Lisell and Gail Mosey. Technical Report NREL/TP-6A2-48853. September 2010 http://www.nrel.gov/docs/fy10osti/48853.pdf

[20] Energy Data. http://www.eia.doe.gov/state/.

[21] Energy Price Indices and Discount Factors for Life-Cycle Cost Analysis – 2010, http://www1.eere.energy.gov/femp/pdfs/ashb10.pdf.

10 APPENDICES

10.1 Appendix A: Points of Contact

The table below lists all the important points of contact (POC) involved in the demonstration.

POINT OF CONTACT Name	ORGANIZATION Name Address	Phone Fax E-mail	Role in Project
Stella Maris Oggianu	UTRC 411 Silver Lane East Hartford, CT (06108)	phone: 860 610-7427 FAX: 860 610-7134 OggianSM@utrc.utc.com	Project Leader
Shawn Gale	UTRC *	phone: 860-610-7952 GaleSM@utrc.utc.com	Senior Contracts Specialist
Luis Arnedo	UTRC *	phone: 860-610-7104 FAX: 860 610-7134 ArnedoL@utrc.utc.com	Power Electronics
Suman Dwari	UTRC *	phone: 860-610-7013 FAX: 860 610-7134 DwariS@utrc.utc.com	Power Electronics, Senior Engineer
Robert Thornton	UTRC *	phone: 860-610-7474 FAX: 860 610-7134 ThorntRK@utrc.utc.com	Electrical Engineer, Senior Engineer
Yiqing Lin	UTRC *	phone: 860-610-7204 FAX: 860 610-7134 LinY@utrc.utc.com	System Dynamics and Optimization, Senior Researcher
Professor Giri Venkataramanan	UWM 2554 Engineering Hall 1415 Engineering Drive Madison, WI 53706-1691	phone: 608/262-4479 FAX: 608/262-5559 giri@engr.wisc.edu	UWM Professor Technical consulting and subcontractor
Rick Arnold	Powers Electric Company Inc. P.O. Box 366 Bordentown, NJ 08505	phone: 609-298-4714 cell: 609-553-2405 fax: 609-298-7127 rickarnold@powerselectricinc.com	Electrical subcontractor
Harry Carson	***Harry Carson PE*** Electrical Engineer PMH Associates Inc.	phone: 856-273-0554 fax: 8562737701 hcarson@pmh-associates.com	Electrical engineer (provided stamped drawings)
Barry Miller	2308 Vandenberg Ave McGuire AFB, NJ 08641	609-754-8328 barry.miller.8.ctr@us.af.mil	Resource Efficiency Manager at McGuire AFB
Ronald Reese	3458 Neely Road Joint Base McGuire-Ft Dix-Lakehurst, NJ, 08641	phone:: 650-9274 Comm: 609-754-9274 Fax: 609-754-9439	McGuire AFB medical clinic Facility Manager/Safety Officer

10.2 Appendix B: Approved electrical system at McGuire AFB

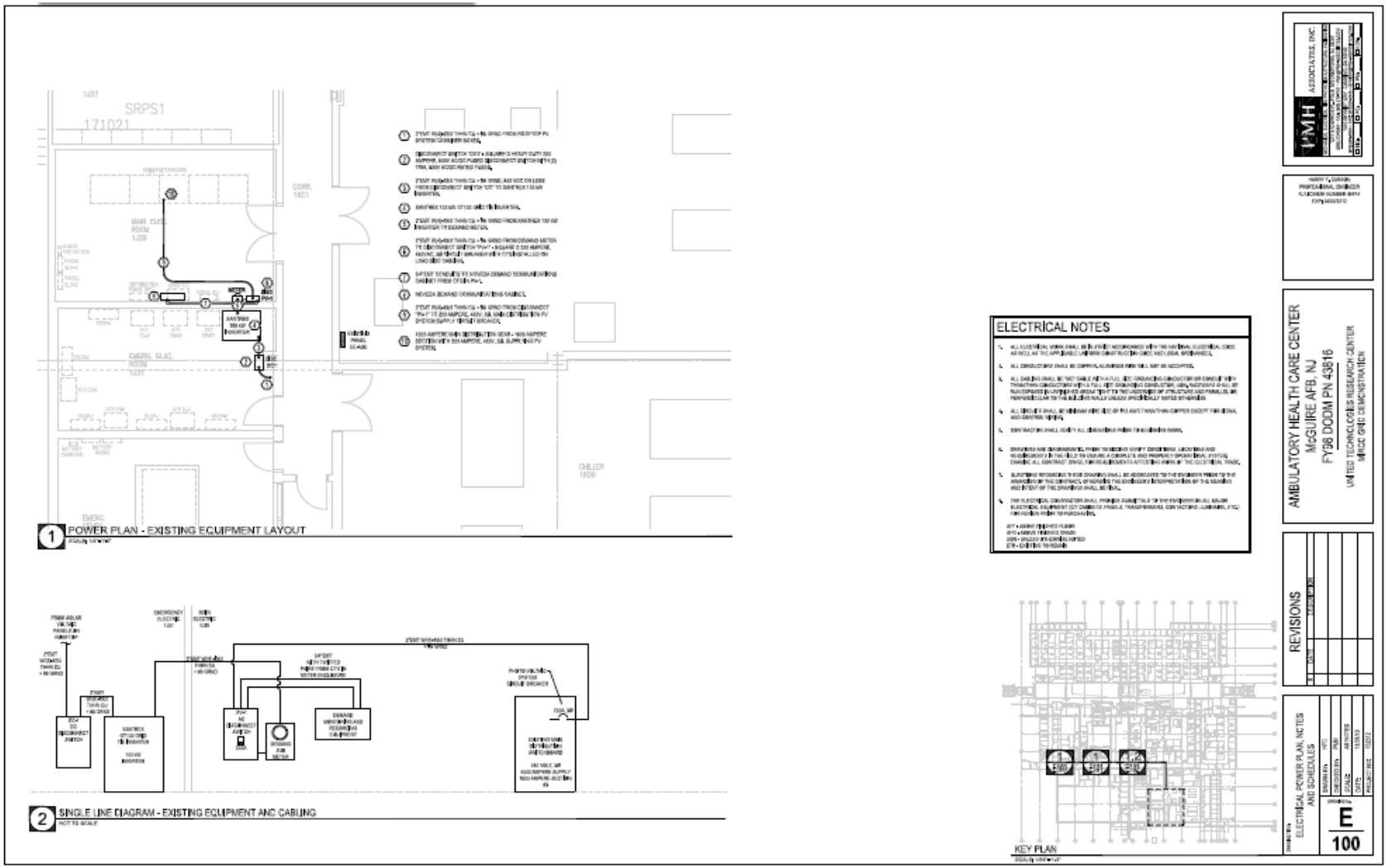

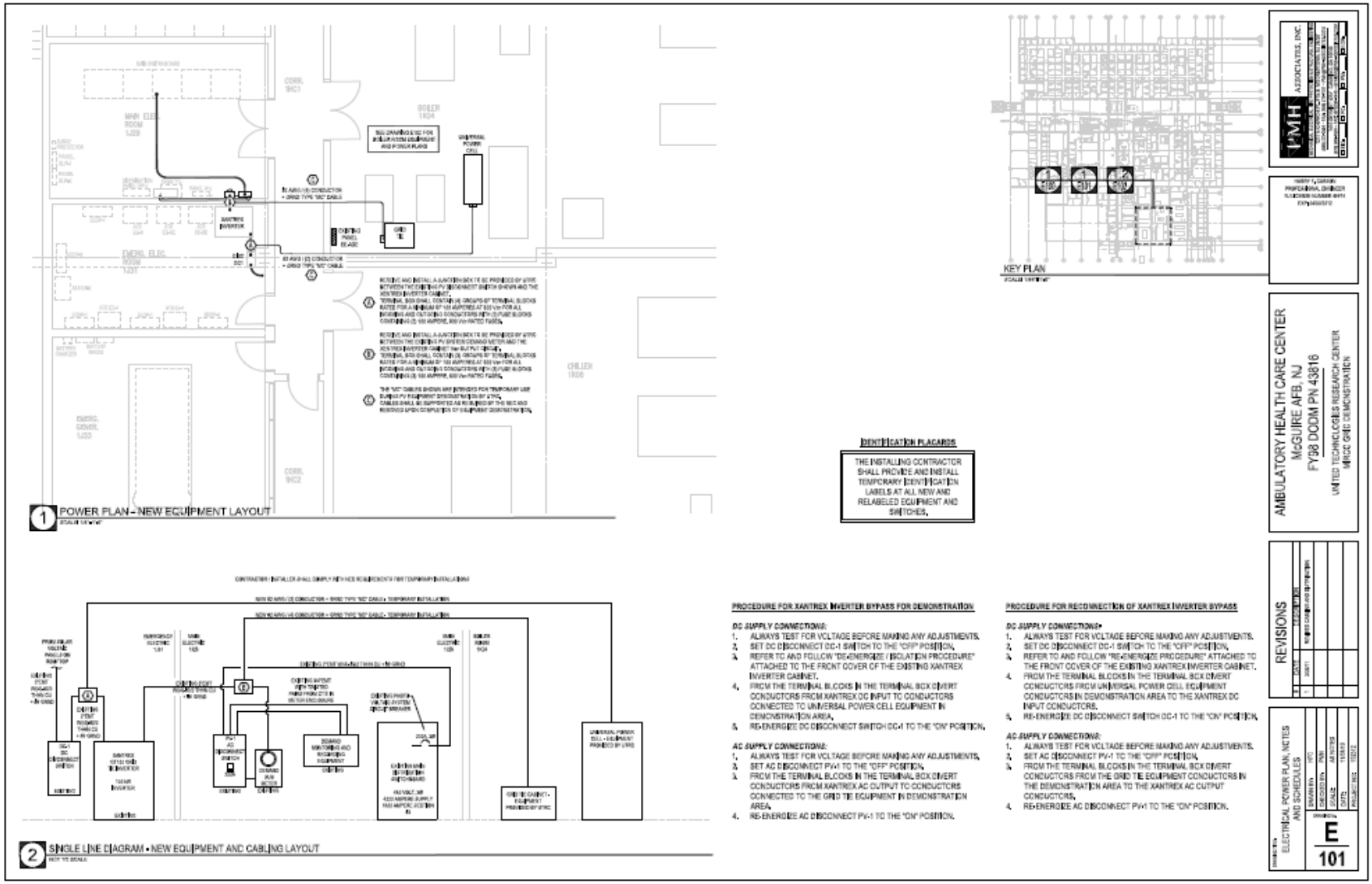
1 POWER PLAN - NEW EQUIPMENT LAYOUT
2 SINGLE LINE DIAGRAM - NEW EQUIPMENT AND CABLING LAYOUT
KEY PLAN
IDENTIFICATION PLACARDS
THE INSTALLING CONTRACTOR SHALL PROVIDE AND INSTALL TEMPORARY IDENTIFICATION LABELS AT ALL NEW AND RELABELED EQUIPMENT AND SWITCHES.
PROCEDURE FOR XANTREX INVERTER BYPASS FOR DEMONSTRATION
PROCEDURE FOR RECONNECTION OF XANTREX INVERTER BYPASS
AMBULATORY HEALTH CARE CENTER
McGUIRE AFB, NJ
FY98 DODM PN 43816
UNITED TECHNOLOGIES RESEARCH CENTER
MACE GRID DEMONSTRATION
REVISIONS
ELECTRICAL POWER PLAN, NOTES AND SCHEDULES
E
101

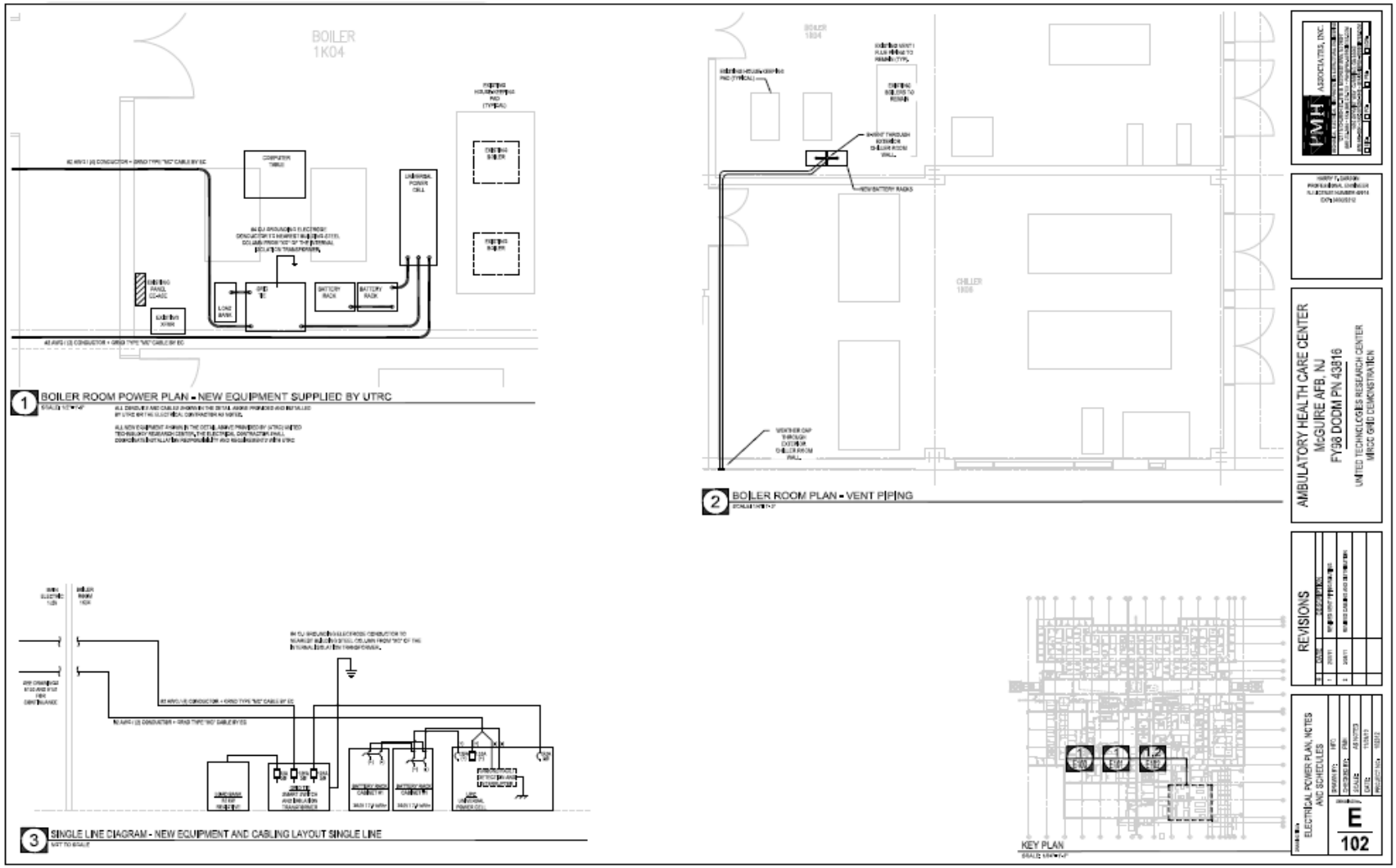
BOILER 1K04
1 BOILER ROOM POWER PLAN - NEW EQUIPMENT SUPPLIED BY UTRC
2 BOILER ROOM PLAN - VENT PIPING
3 SINGLE LINE DIAGRAM - NEW EQUIPMENT AND CABLING LAYOUT SINGLE LINE
KEY PLAN
AMBULATORY HEALTH CARE CENTER
McGUIRE AFB, NJ
FY98 DOOM PN 43816
UNITED TECHNOLOGIES RESEARCH CENTER
MICRO GRID DEMONSTRATION
REVISIONS
ELECTRICAL POWER PLAN, NOTES AND SCHEDULES
E
102

10.3 Appendix C: Start-up and turn-off sequence

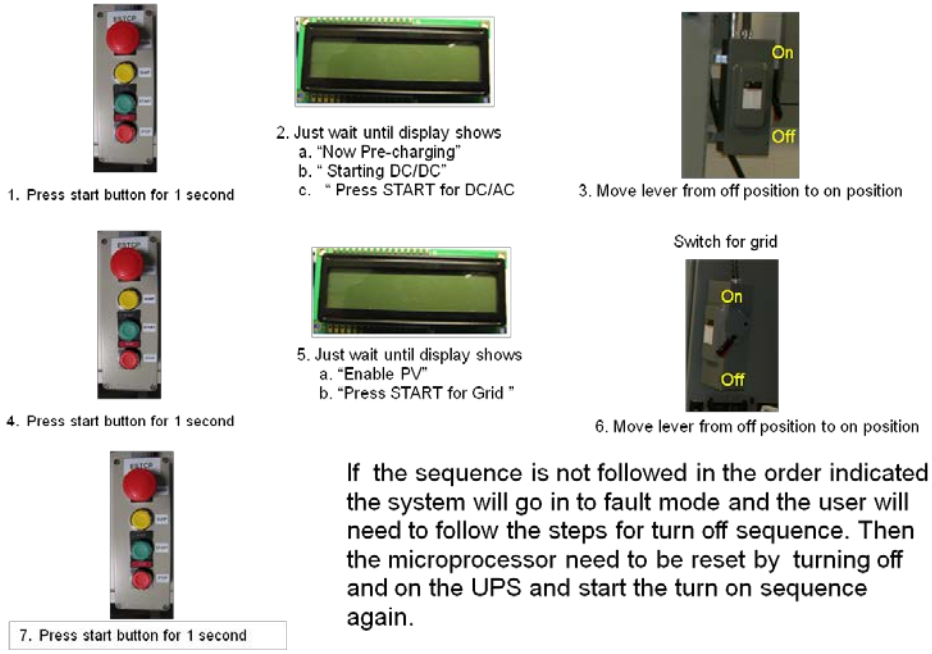

Figure 31: Start up sequence

For turn-off at any time please follow the instructions in Figure 32.

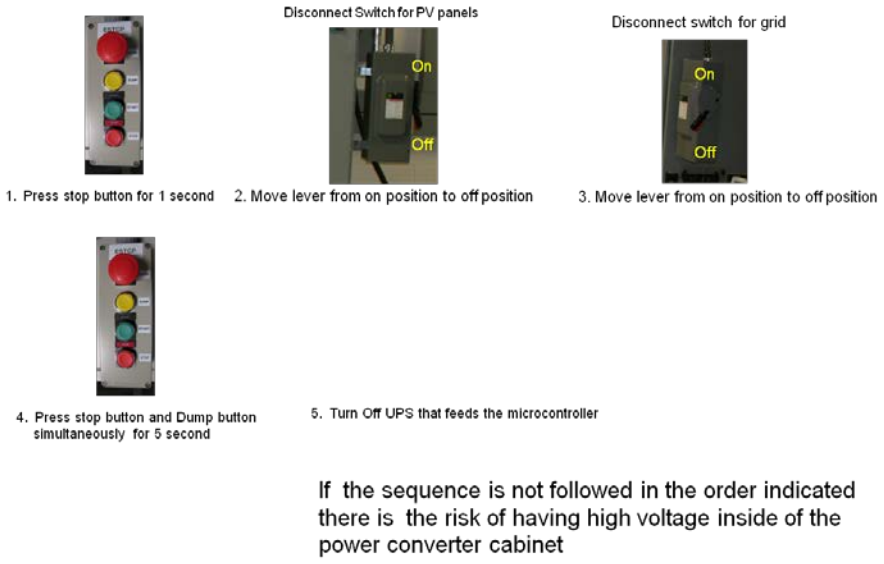

Figure 32: Turn off Sequence

10.4 Appendix D: Equipment Prices

Table 19: Initial and O&M cost rage for equipment that may be included in a Microgrid.

Equipment	Install Cost Range	Maintenance Cost	Shelf Life
Battery	$1500/kWh	0	15 years
Wind turbine (generic) [18]	$(1500-4500)/kW	~ $425 /kW	20 years
Solar PV [19]	$(5000-12000)/kW	~ $7.08 /kW	25 years
CHP [17]	$800 /kW -(for a 2500kW system)	Once every 4 year at a cost of $21/kW (for a 2500kW system)	10 years
Diesel Generator (generic) [[17]]	$400-$800/kW	$105/kW	15 years

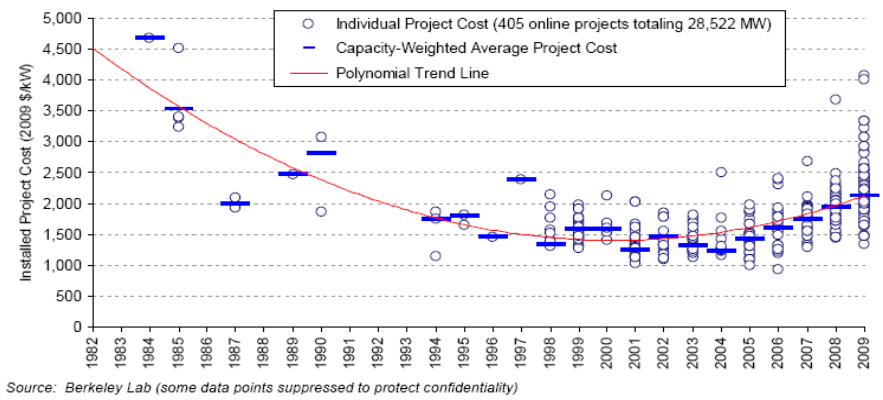

Figure 33: Wind turbine installed cost ($/kW) [18] .

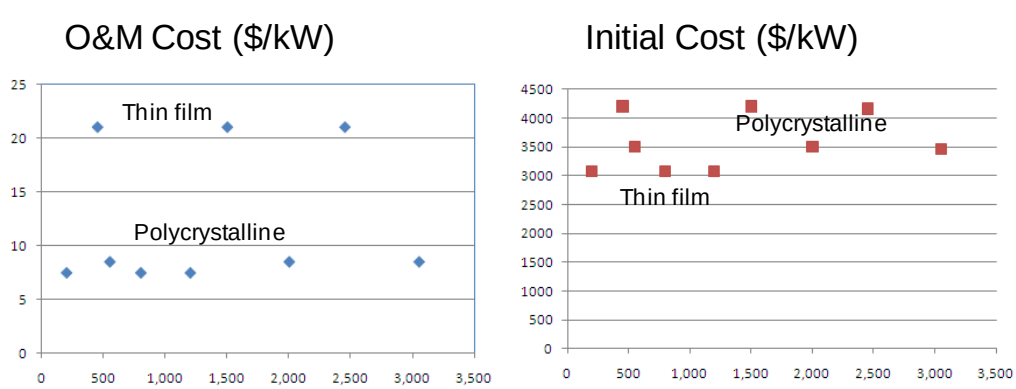

Figure 34: Solar PV O&M and Initial Cost ($/kW) [19] .

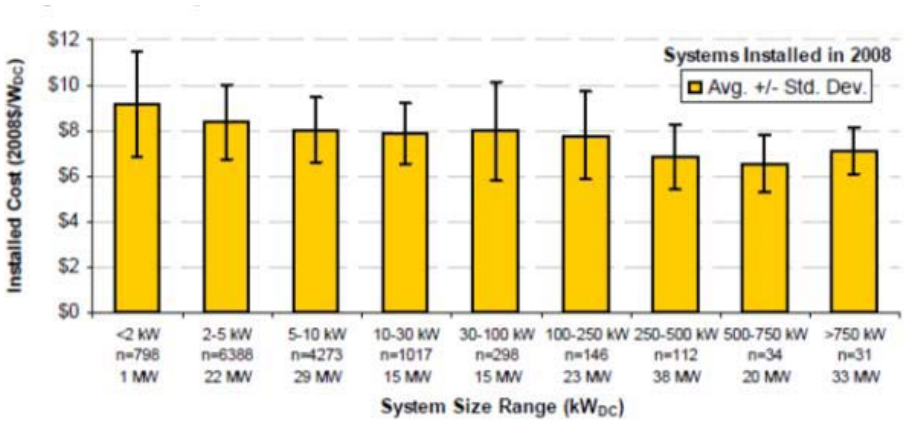

Figure 35: Solar PV Installed Cost ($/kW) [19] .

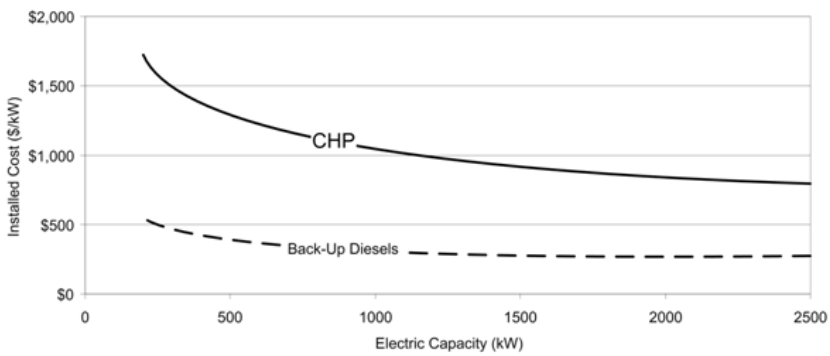

Figure 5: Typical Costs for Cogeneration Systems Based on the Size of the Systems

Chart Includes Typical Costs for Heat Recovery Equipment, Installation, and Housing

Figure 36: Typical Cost for Cogeneration Systems [17] .

10.5 Appendix E: Smart Switch IEEE 1547 Verification in Simulation

Authors: Jonathan Lee, Mustafa Baysal, Professor Giri Venkatarmanan

Abnormal voltage and frequency events were simulated on UTRC microgrid setup to verify correct operation of SEL-547 relay with respect to the IEEE 1547 standard. Tables 1 and 2 show the IEEE 1547 standard for distributed resources (DR) greater than 30kW and for both voltage and frequency respectively. First, Table 1 shows the clearing time standards related to changes in voltage based off a percentage of the nominal operation voltage. Four voltage ranges are given in the standard, and Table 1 shows how they relate to the specific voltage values of the smart switch and lab testing. The clearing times are given in the final column. At this DR level, these clearing times are the default. Second, Table 2 shows the clearing time standards related to three frequency ranges from the nominal 60 Hz operating level. The clearing time is the maximum amount of time allowable for the DR to be connected to the utility after a grid event occurs. If the DR disconnects at or before this clearing time standard, it will be in compliance. After this clearing time occurs, if the DR is still connected, it will be out of compliance with IEEE 1547.

Table 1. IEEE 1547 Voltage Standard Settings

Voltage (208VLL RMS - Base)	**Line-to-Line (LL)**	**Line-to-Neutral (LN)**	**-**
Voltage Range (% of base voltage)	**Voltage Value Range**	**Voltage Value Range**	**Clearing Time (seconds)**
V < 50%	V < 104VLL	V < 60VLN	0.16
50% ≤ V < 88%	104VLL ≤ V < 183VLL	60VLN ≤ V < 105.7VLN	2.00
110% < V < 120%	228.8VLL < V < 249.6VLL	132.1VLN < V < 144.1VLN	1.00
V ≥ 120%	V ≥ 249.6VLL	V ≥ 144.1VLN	0.16

Table 2. IEEE 1547 Frequency Standard Settings (For a Distributed Resource > 30kW)

Frequency Range (60Hz = Normal Operation)	**Clearing Time (seconds)**
> 60.5 Hz	0.16
< {59.8 – 57.0} Hz	Adjustable 0.16 to 300
< 57.0 Hz	0.16

Used within the smart switch is the SEL 547. It is a DR relay designed to be compliant with the IEEE 1547 standard. The settings of the SEL 547 are programmable, and the manufacturer presets some of these settings. General IEEE 1547 settings meant to fulfill the standard are a few of the preset settings. The settings relating to both IEEE 1547 voltage and frequency ranges of the SEL 547 are shown in Tables 3 and 4. These settings are programmed into the device as a reference. Measurements of the clearing time are shown, in tables 5 and 6.

Table 3. SEL 547 Settings - Voltage (IEEE 1547 Related) (Cycle values at 60Hz nominal)			
Voltage (277.12 VLN RMS - Base)	**-**	**-**	**-**
Voltage Range (% of base voltage)	**Voltage (V)**	**At a Clearing Time Value Of (cycles)**	**At a Clearing Time Value Of (seconds)**
V < 50%	138.56(50%)	6	0.10
50% ≤ V < 88%	243.87(88%)	116	1.93
110% < V < 120%	304.84(110%)	56	0.93
V ≥ 120%	332.55(120%)	6	0.10

Table 4. SEL 547 Settings - Frequency (IEEE 1547 Related for a Distributed Resource > 30kW) (Cycle values at 60Hz nominal)			
Frequency Range (60Hz = Normal Operation)	**Frequency (Hz)**	**At a Clearing Time Value Of (cycles)**	**At a Clearing Time Value Of (seconds)**
> 60.5 Hz	60.5	5	0.08
< {59.8 – 57.0} Hz	59.3	116	1.93
< 57.0 Hz	57	5	0.08

The simulation circuit included the UTRC universal power cell which is rated at 380 V 100 kW, SEL 547 relay, smart switch, 60 kW resistive load bank, 13.2 kV grid energy source, 0.48/13.2 kV transformer and several cables (see Figure 1). The inverter is adjusted such that it produces 30 kW at grid connected mode. All simulations were conducted by stepping up or down either voltage or frequency of grid energy source from the nominal operating point (13.2 kV) to the range under test at 0.5 sec. Tables 5 and 6 show the results of this testing.

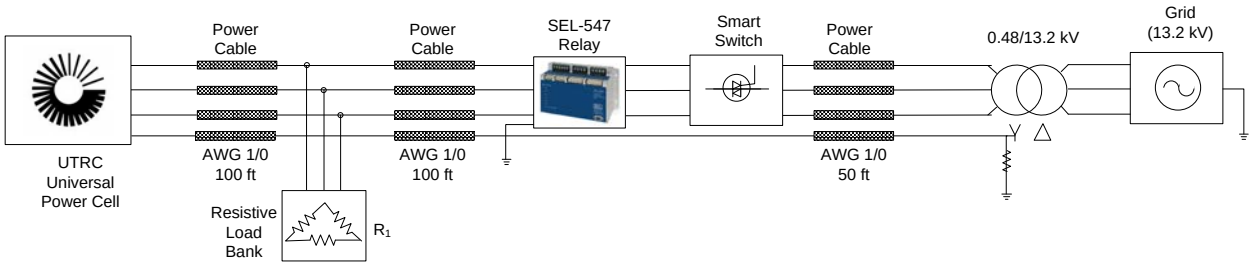

Figure 1. UTRC microgrid diagram

Table 5. IEEE 1547 Smart Switch Voltage Testing				
Voltage Range (% of 13.2kVLL)	**Testing Voltage Used**	**Clearing Time Average (seconds)**	**IEEE 1547 Standard (seconds)**	**Conforms to IEEE Standard?**
V < 50%	6 kV LL (%45.45)	0.1145	0.16	Yes
50% ≤ V < 88%	10kV LL (%75.76)	1.9430	2.00	Yes
110% < V < 120%	14.7kV LL (%111.36)	0.9470	1.00	Yes
V ≥ 120%	16kV LL (%121.21)	0.1170	0.16	Yes

Table 6. IEEE 1547 Smart Switch Frequency Testing				
Frequency Range (60Hz = Normal Op.)	**Testing Frequency Used**	**Clearing Time Average (secs)**	**IEEE Standard (secs)**	**Conforms to IEEE Standard?**
> 60.5 Hz	61 Hz	0.0940	0.16	Yes
< {59.8 – 57.0} Hz	58 Hz	1.9430	Adjustable 0.16 to 300	Yes
< 57.0 Hz	56 Hz	0.1010	0.16	Yes

Figures 2 and 3 illustrates the variations corresponding to the test simulations listed in Table 6 and 7.

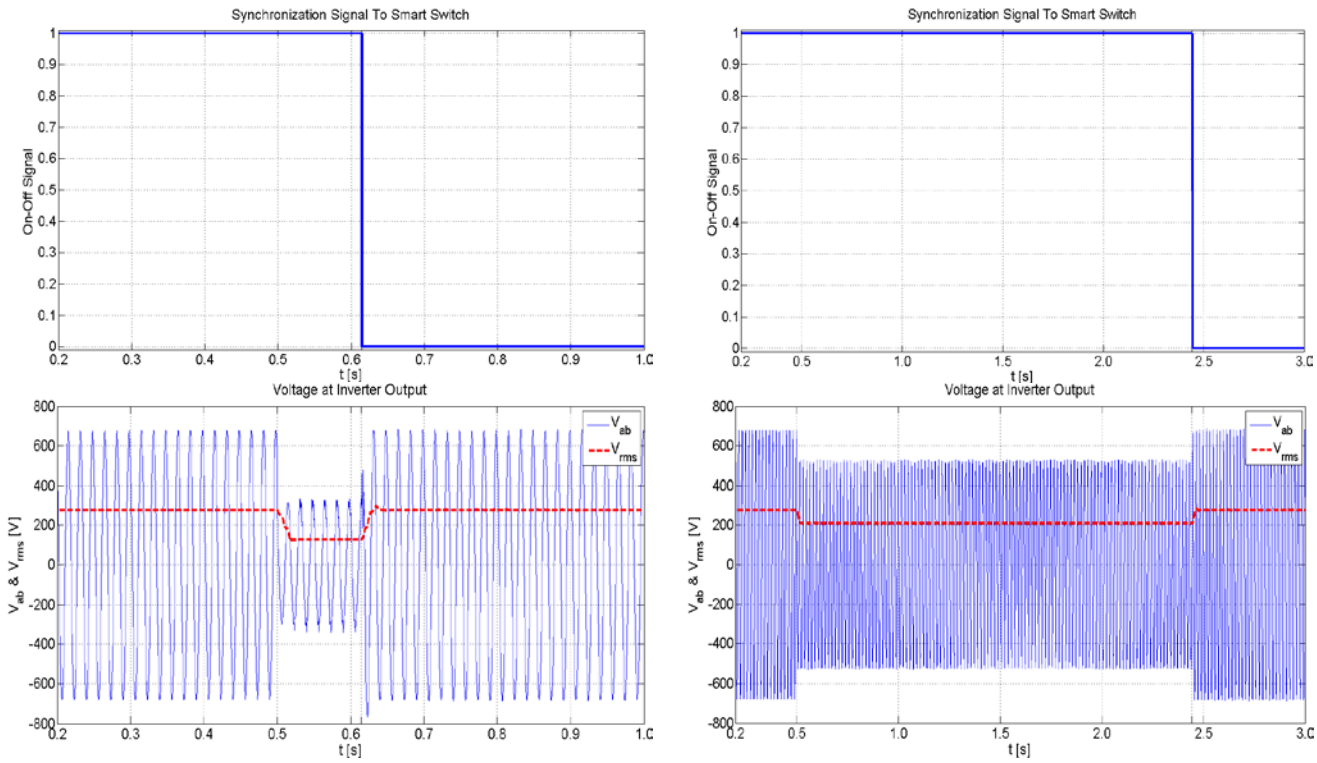

a) 6 kV grid voltage testing variations

b) 10 kV grid voltage testing variations

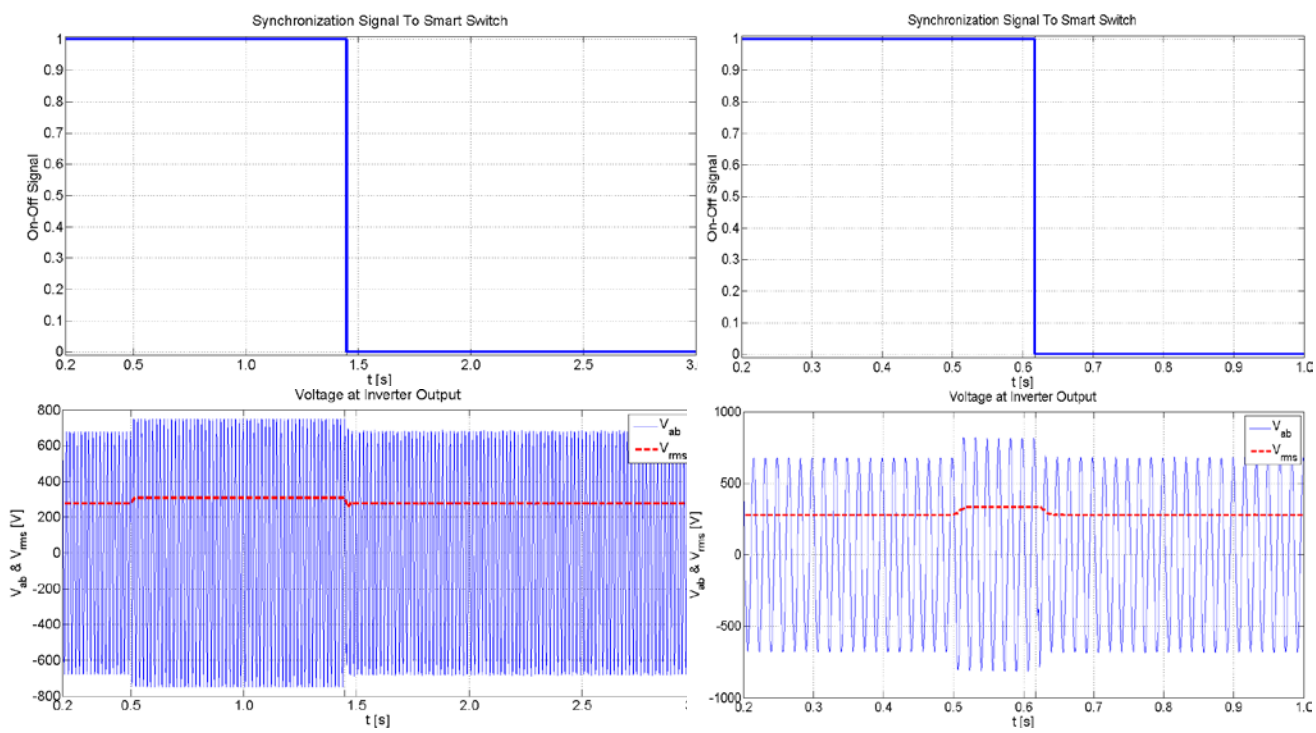

c) 14.7 kV grid voltage testing variations

d) 16 kV grid voltage testing variations

Figure 2. Smart Switch voltage testing graphs

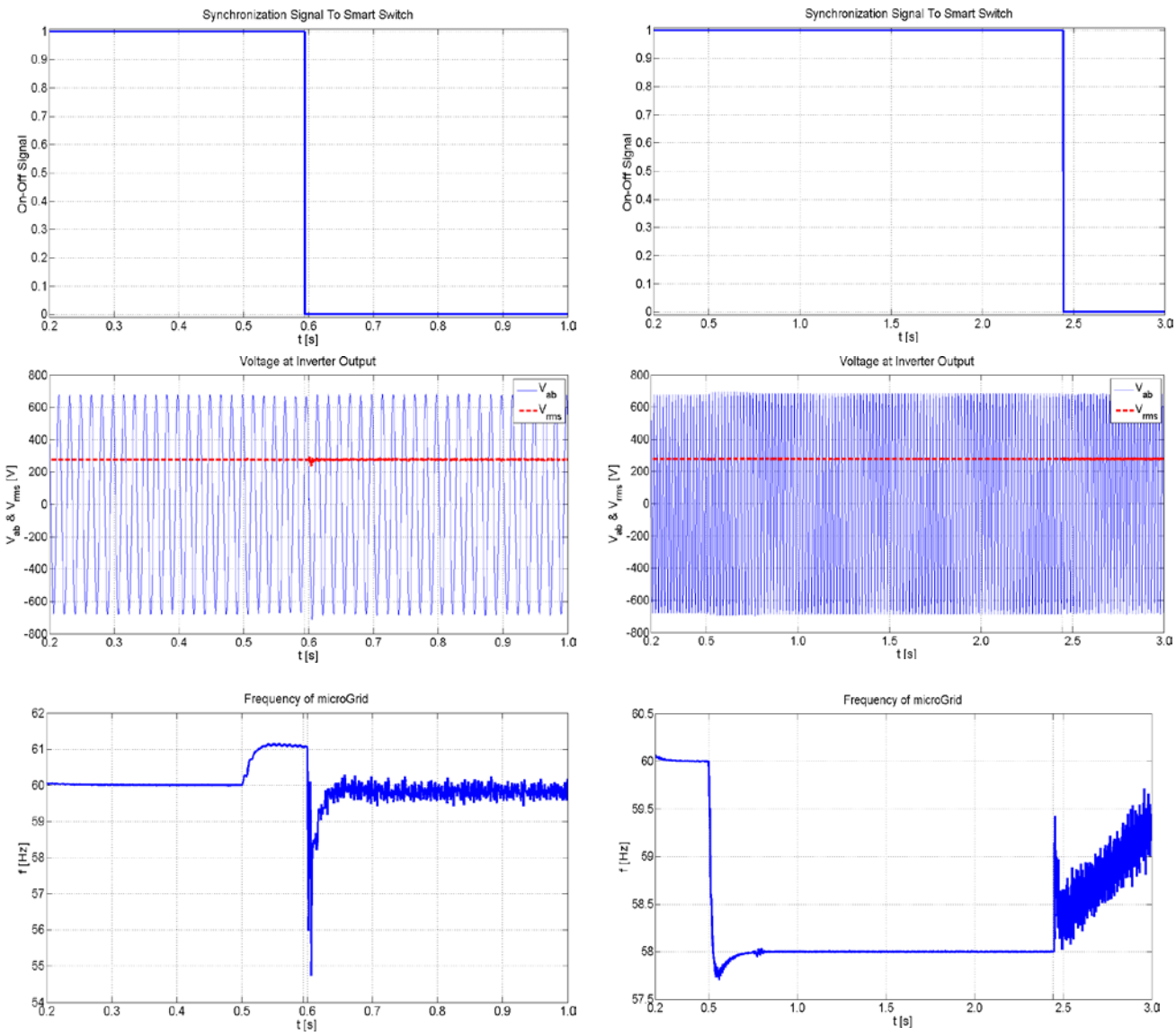

a) 61 Hz grid frequency testing variations

b) 58 Hz grid frequency testing variations

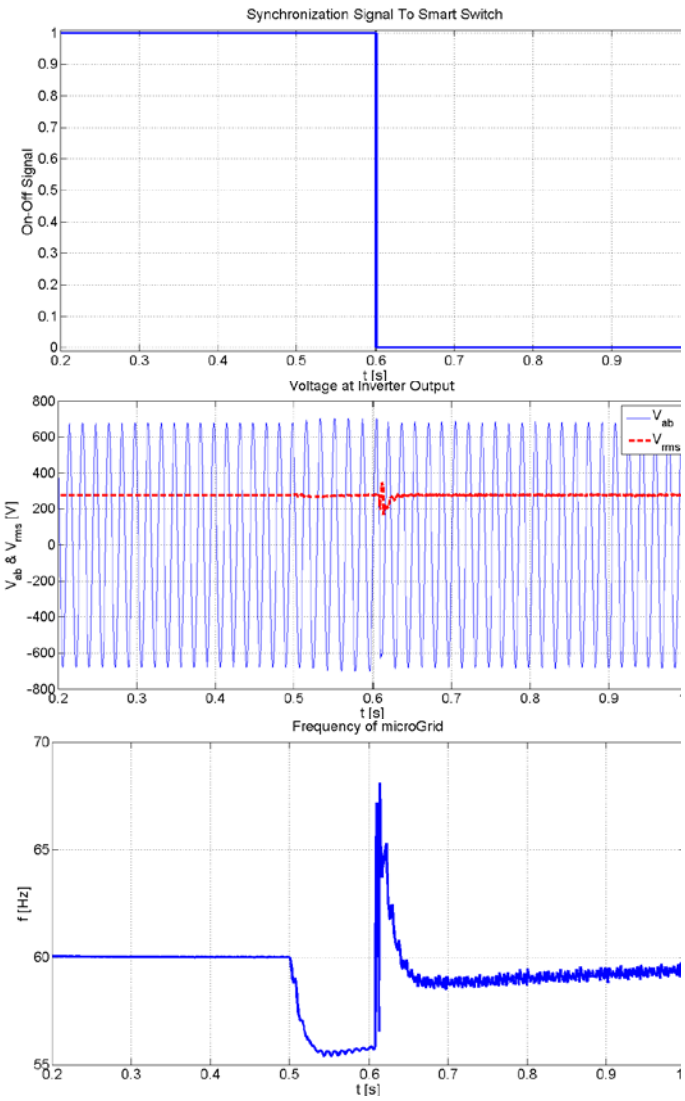

c) 56 Hz grid frequency testing variations

Figure 3. Smart Switch frequency testing graphs