U.S. NAVAL RESEARCH LABORATORY

Atmospheric Marine Lifecycle Test Facility

Center for Corrosion and Atmospheric Structural Testing (C-CoAST)

Naval Research Lab – Key West
Center for Corrosion Science and Engineering

DISTRIBUTION A. Approved for public release: distribution unlimited.

U.S. NAVAL RESEARCH LABORATORY

Why do systems fail, when we spend so much money on materials development and qualification?

How materials are qualified:

Environmental

Mechanical

How typical materials fail:

Mechanical failure of coating followed by corrosion

Lap splice corrosion followed by mechanical failure

Emerging Naval Material Challenges

New alloys and composites

Treatments and coatings

Materials often fail at interfaces and under multi-modal stressors.

We need to develop the appropriate tools to accurately assess complex material interactions to avoid costly system failures.

Aircraft Coating Qualification-First Line of Defense

Navy Coating Qualification

- Qualify primer and topcoat separately
- MIL-DTL-53022 (primer)
  - Mechanical
    - Flexibility
  - Exposure
    - Outdoor weathering (UV)
    - Salt spray (B117) and cyclic corrosion (GMW14872)
- MIL-PRF-85285 (topcoat)
  - Mechanical
    - Flexibility/impact flexibility/low temp flexibility
  - Exposure
    - Xenon arc (UV)
    - Humidity
- 2 years on a ship

Air Force Qualification

- MIL-PRF-32239
  - Coating system (surface treatment, primer, topcoat)
  - Mechanical test
    - Flexibility
  - Outdoor Exposure
    - ≥ than chromium control at Daytona

Qual. ✓

Real World

In Service ✗

Current coating qualification methods do not capture failure modes that occur as a result of combined environmental degradation and mechanical stress.

We need to improve our qualification testing.

Corrosion Fatigue

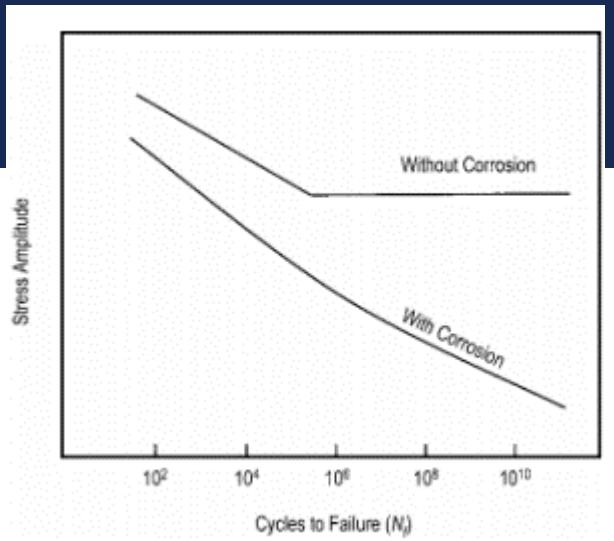

- Typically, fatigue testing is performed on “perfect” polished samples to generate a S-N curve
- Fatigue analysis of a part will then adjust the material expected lifetime, adjusting for
  - Size
  - Surface Finish
  - Statistical scatter (reliability factor)
  - Type of loading
  - Others…
- This adjusted material fatigue life is compared to the part stresses and number of cycles at those stresses to determine the suitability of the part in a given fatigue environment
- There isn’t a reliable method to adjust a material’s fatigue life for the corrosion environment, this data must be generated via test
- This fatigue life in a corrosion environment can be few to several orders of magnitude different than the fatigue life of the “perfect” specimen in the laboratory
- The corrosion fatigue effect is also a function of other variables that necessitate testing in a representative environment, at representative rate, and with the appropriate mechanical loading conditions

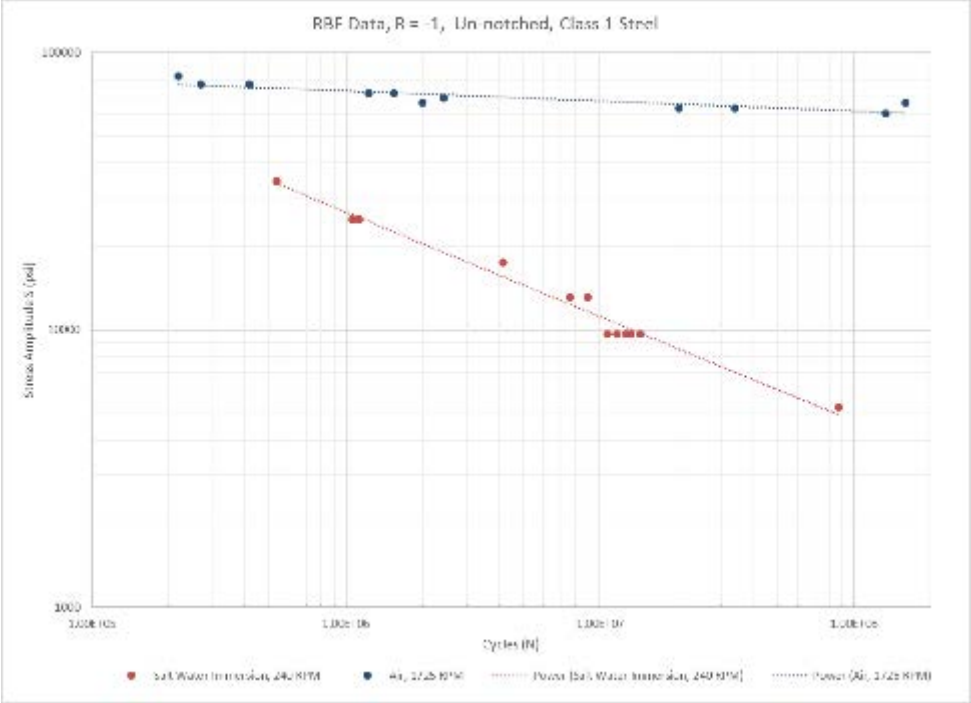

Corrosion fatigue data is necessary for correct prediction of hardware fatigue life designing

Center for Corrosion and Structural Testing (C-CoAST)

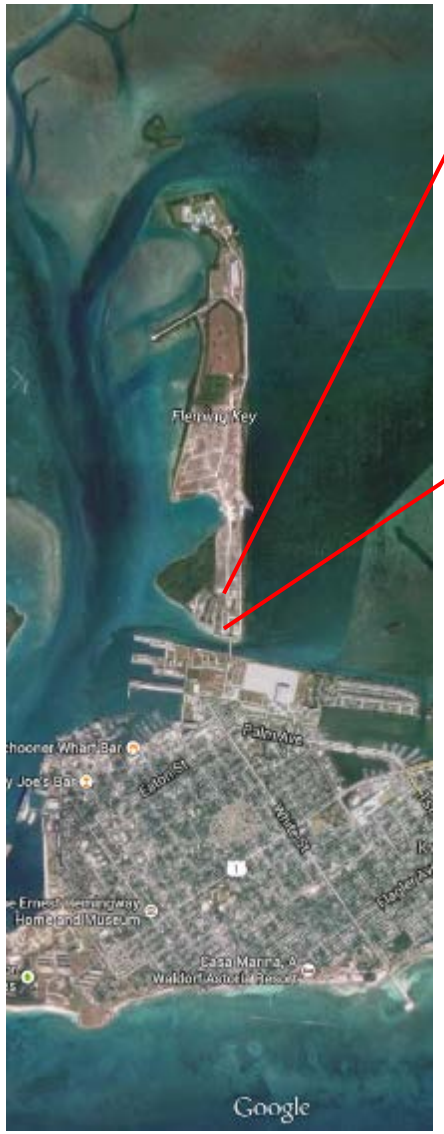

Location of new
C-CoAST Exposure Site
NAS Key West
Trumbo Point Annex

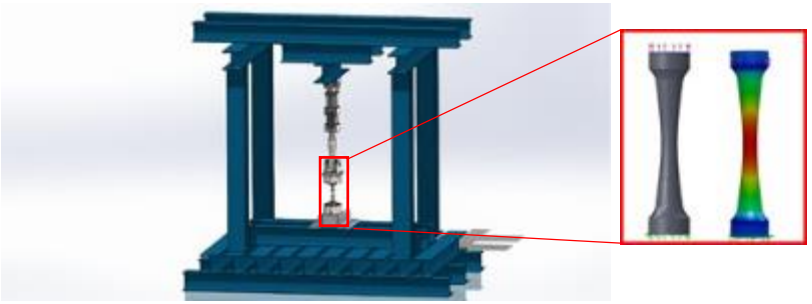

Combined dynamic mechanical load testing in outdoor high UV and high corrosivity environment

High UV Index

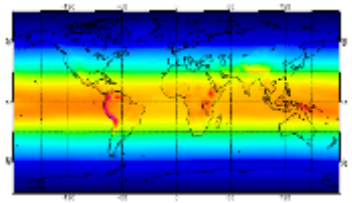

"Blue Water" Exposure

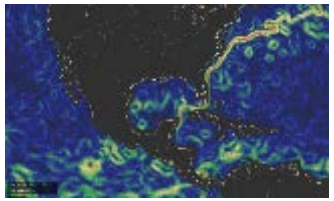

High UV and high corrosivity operationally relevant environment

Real time characterization of atmospheric conditions during test

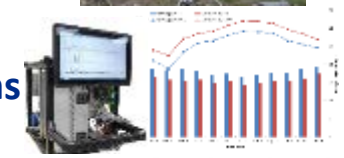

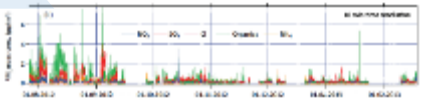

C-CoAST offers combined marine environment exposure and realistic static and dynamic loading with concurrent atmospheric monitoring.

Site will be used to "calibrate" accelerated and combined effect test chambers.

U.S. NAVAL RESEARCH LABORATORY

Outdoor Servo-Hydraulic Test Station at Key West

C-COAST Site Layout

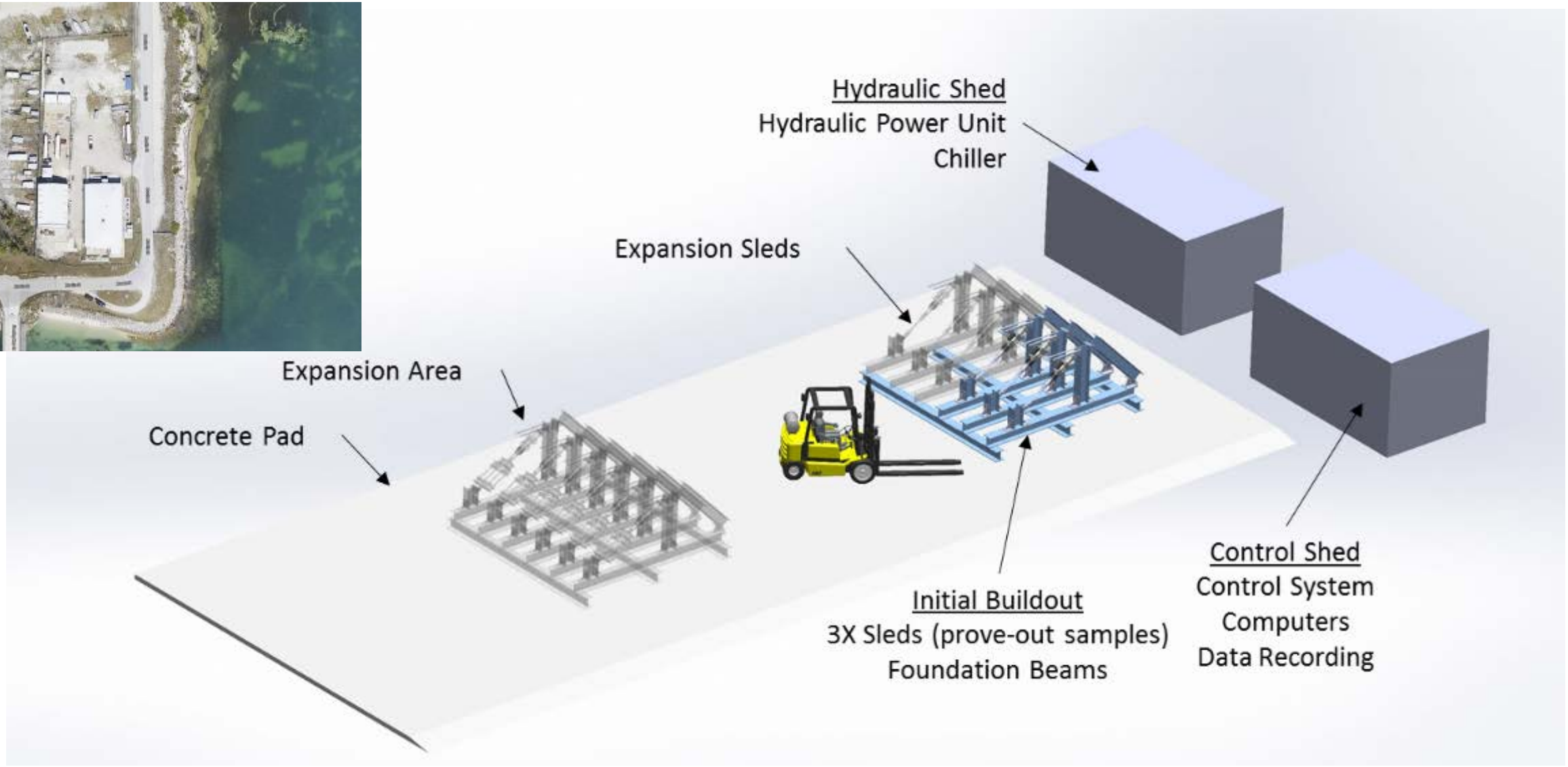

U.S. NAVAL RESEARCH LABORATORY

Center for Corrosion and Structural Testing (C-COAST)

NRL built a combined dynamic mechanical load testing in high UV / high corrosivity environment

Adaptable Steel I-Beam Test/Loading Structure

(12 ft cube, easily expandable)

- Large Coupons to Experimental Sub-Assemblies to Production Components
- 10 to 50 Kip Servo-Hydraulic Actuators
- Uni- or Multi-axial loading
- Static, Dynamic or Spectrum Loading

Real time characterization of atmospheric conditions during test

Correlated key atmospheric corrosivity monitoring conducted during exposure tests

- Atmospheric aerosol analysis
- Temperature / humidity / rainfall
- UV

C-COAST offers combined marine environment exposure and realistic static and dynamic loading with concurrent atmospheric monitoring.

Atmospheric Monitoring and Correlation to Other Environments

U.S. NAVAL RESEARCH LABORATORY

	C-COAST	Deployed
Atmospheric Monitoring	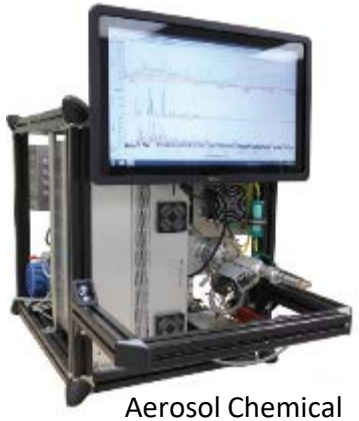 Aerosol Chemical Speciation Monitor Chloride Candle Weather Station	Automated Filter Assembly for Aerosol Monitoring
Hardware Exposure	Atmospheric exposure Spray Rack	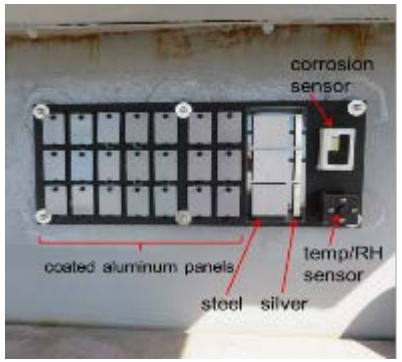 Deployed Samples

Continuous monitoring of C-COAST environment with deployed sensor packages will enable greatly improved atmospheric corrosion predictions of deployed materials and the opportunity to develop improved material survivability test methods

Generic Apparatus for Fatigue Testing

- Mechanical Loading Capabilities
  - 9 22 Kip Actuators
  - 3 55 Kip Actuators
- 4 Service Manifolds
- 64 Strain Gauge Channels
- Full-Capability "MTS Software Suite"

45 degree, southern exposure (for UV Effects)

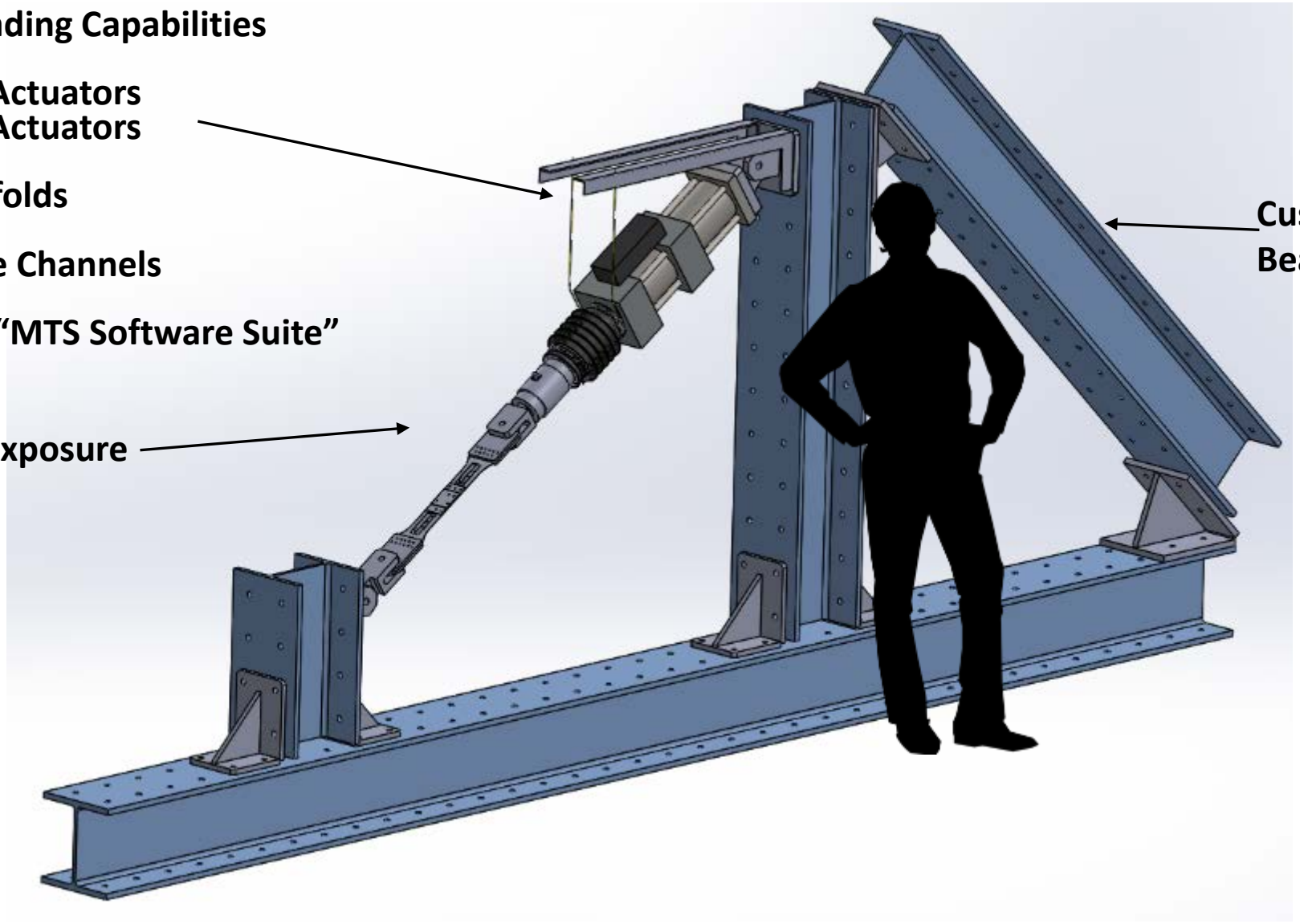

Custom-Built Steel Beam "test stands"

Single Actuator Constant and Variable Amplitude Loading Fatigue

- System qualification tests with single or multiple coupon configuration for fatigue testing
  - Constant amplitude loading: fixed R-ratio testing of dog bone specimens of structural materials
  - Variable amplitude loading: standardized spectrum for fixed and rotary wing aircraft and representative spectrum from aircraft usage monitoring program if available
  - Accurate end point reproduction of variable amplitude sequence at 20 Hz+
- Load control, displacement control, and strain control through extensometer or strain gauges

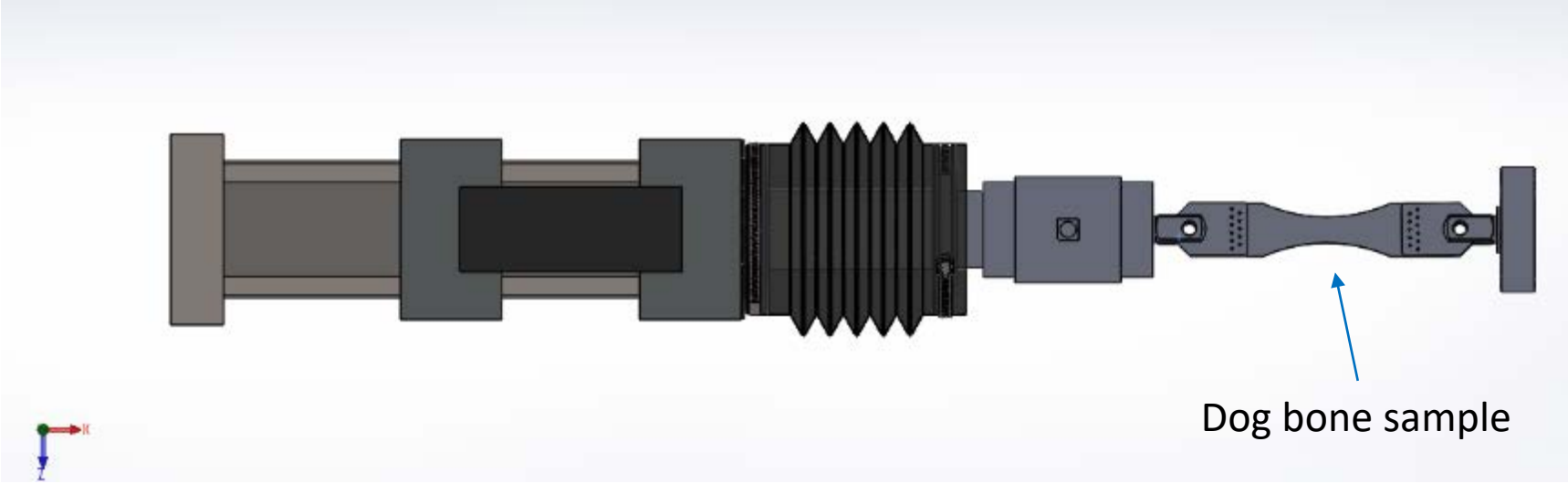

Example of Variable Amplitude Loading Spectrum

- A variable amplitude loading spectrum sequence to be applied in the laboratory for fatigue studies is generally obtained from the flight data records
- Standardized sequences have been developed for fixed wing aircraft, for example the FALSTAFF and TWIST spectrums
  - The Fighter Aircraft Loading Standard For Fatigue (FALSTAFF) spectrum load sequence was produced from histories from 342 individual flights of 5 different aircraft of the wing-root loads on a variety of missions
  - The Transport Wing Standard (TWIST) load represents the realistic load-time history of the critical lower wing skin at the wing root of a transport aircraft
- Standardized sequences have been developed also for rotary wing aircraft, for example the HELIX and FELIX spectrums
  - Loads are generated by the mechanical rotation of the blades with strong components from both frequency of rotation and number of blades
  - HELIX and FELIX are standard loading sequences derived for the main rotors of helicopters
    - HELIX: Loading standard for 'hinged' or articulated rotors
    - FELIX: Loading standard for 'fixed' or semi-rigid rotors

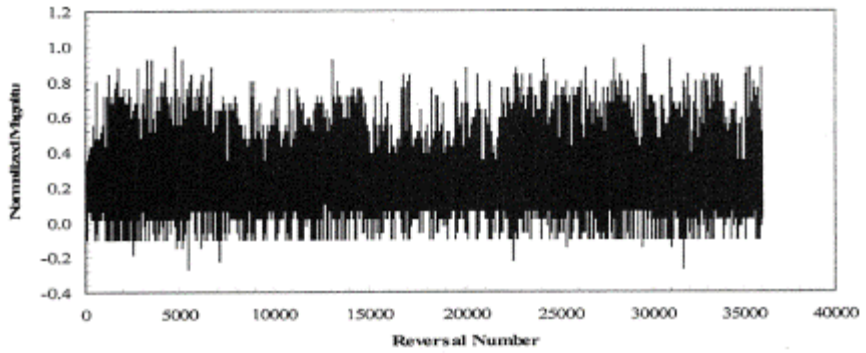

FALSTAFF spectrum

4 Sample Wiffle Installation

A wiffletree assembly allows for continuous testing after failure of one of the samples or after induced damage has reduced its load carrying capability

Monitoring of displacement limits allows pausing when one of the samples fails

Allows for monitoring of strain at critical locations using extensometer or strain gauges

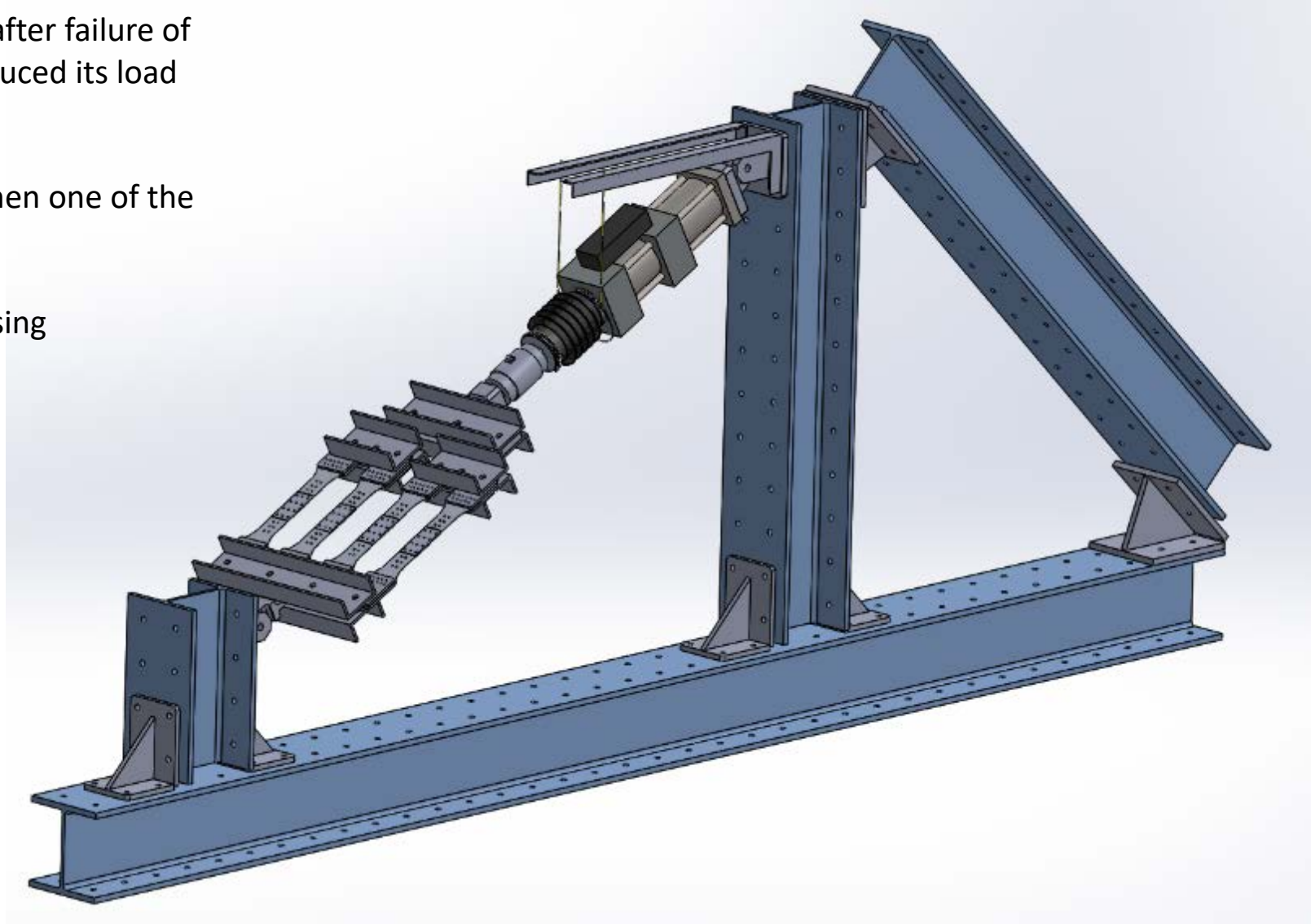

Single Actuator Fatigue and SCC Testing

- System qualification tests with fracture mechanics samples:
  - Compact tension (CT)
  - Middle tension (MT)
- Load control and option to program K-control (Stress Intensity Factor) by monitoring crack length through strain gauge (back face strain for CT sample shown) or crack mouth opening displacement with clip gauge
- Fatigue crack growth testing
  - Constant amplitude loading: load control constant R-ratio, load shedding constant R-ratio, K-control testing
  - Variable amplitude loading for representative spectrum: load control, K-control
- Environmental fracture testing
  - SCC testing: K_{Iscc} testing, ripple loading testing

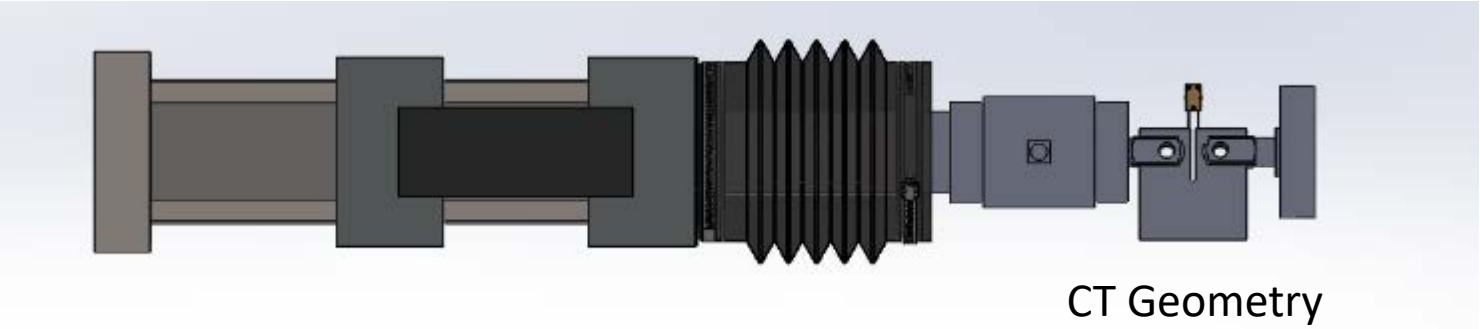

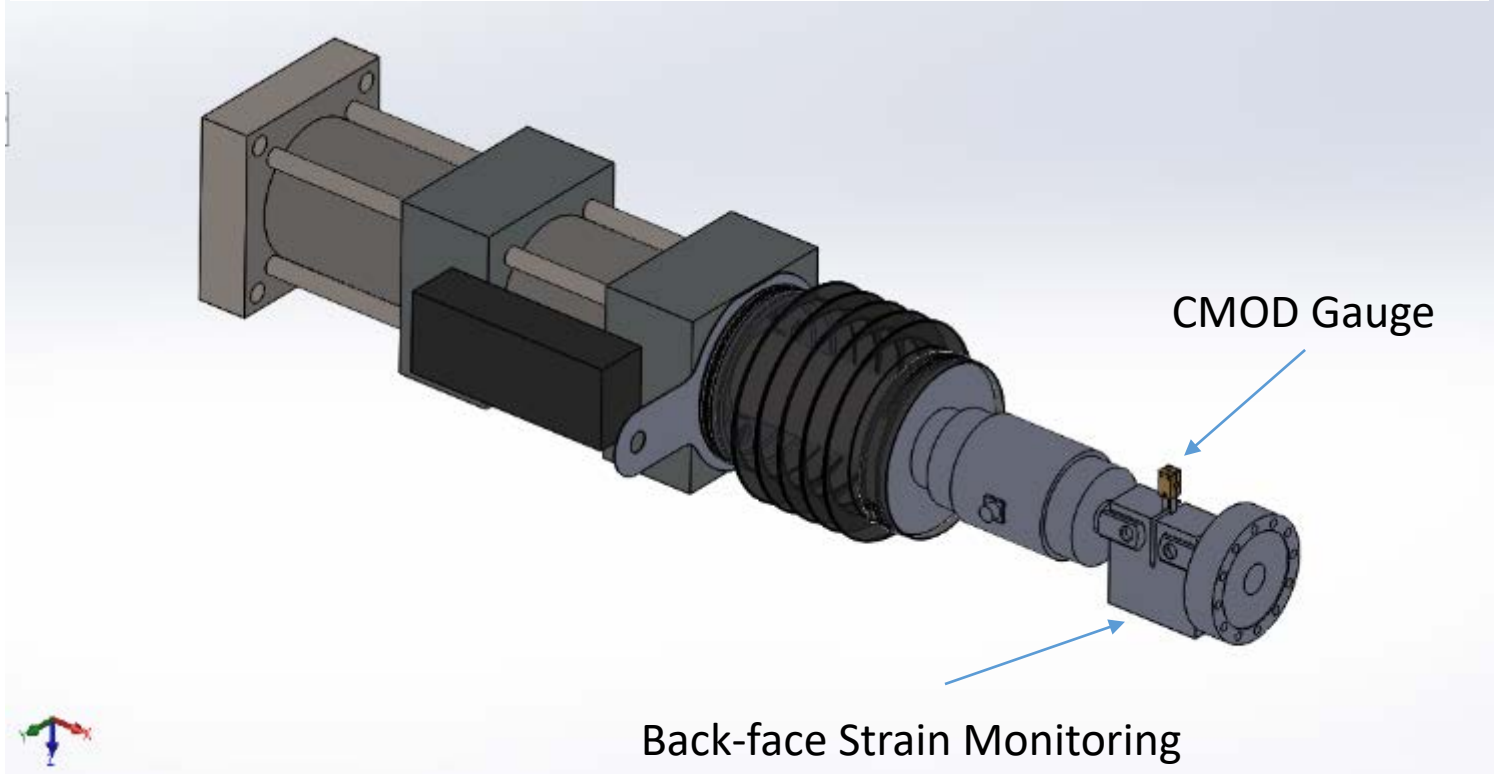

Multiple Actuator Bending-Torsion Testing Configuration

- Testing fixture to apply bending and torsional loads to a cylindrical sample
- Conceptual design of multiaxial tension-torsion testing with multiple actuators
  - Movement of the actuators in sync applies bending to the sample
  - Movement of the actuators out of sync applies torque to the sample
- Load control and strain control testing in axial and torsion to allow low cycle fatigue of multiaxial loading
  - In-phase and out-of-phase bending-torsion loading (LCF and HCF)
- Synchronized control of the two actuators to apply representative loads to structural member
  - Similar configurations for bending-torsion require usually 2+ actuators

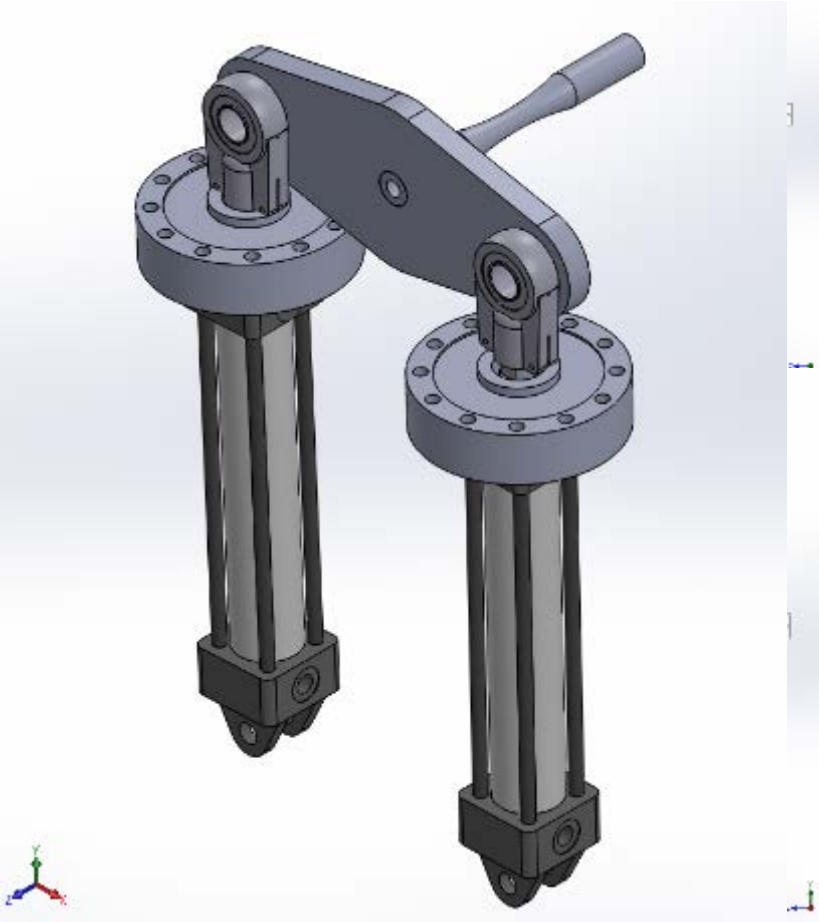

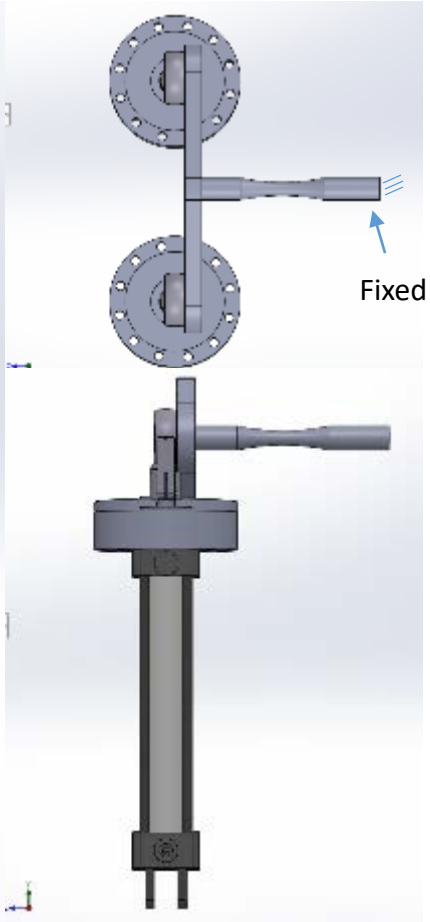

Structural Testing with Multiple Actuators

- Conceptual drawing of full scale fatigue testing of aircraft wing
- Independent control of multiple actuators
- Synchronized control of all actuators to apply representative loads to structural member
- Synchronized data acquisition: loads, displacements, environmental parameters
- Monitoring and recording of strain at hot spots of structure using strain gauges and/or optical measurement methods (digital image correlation)

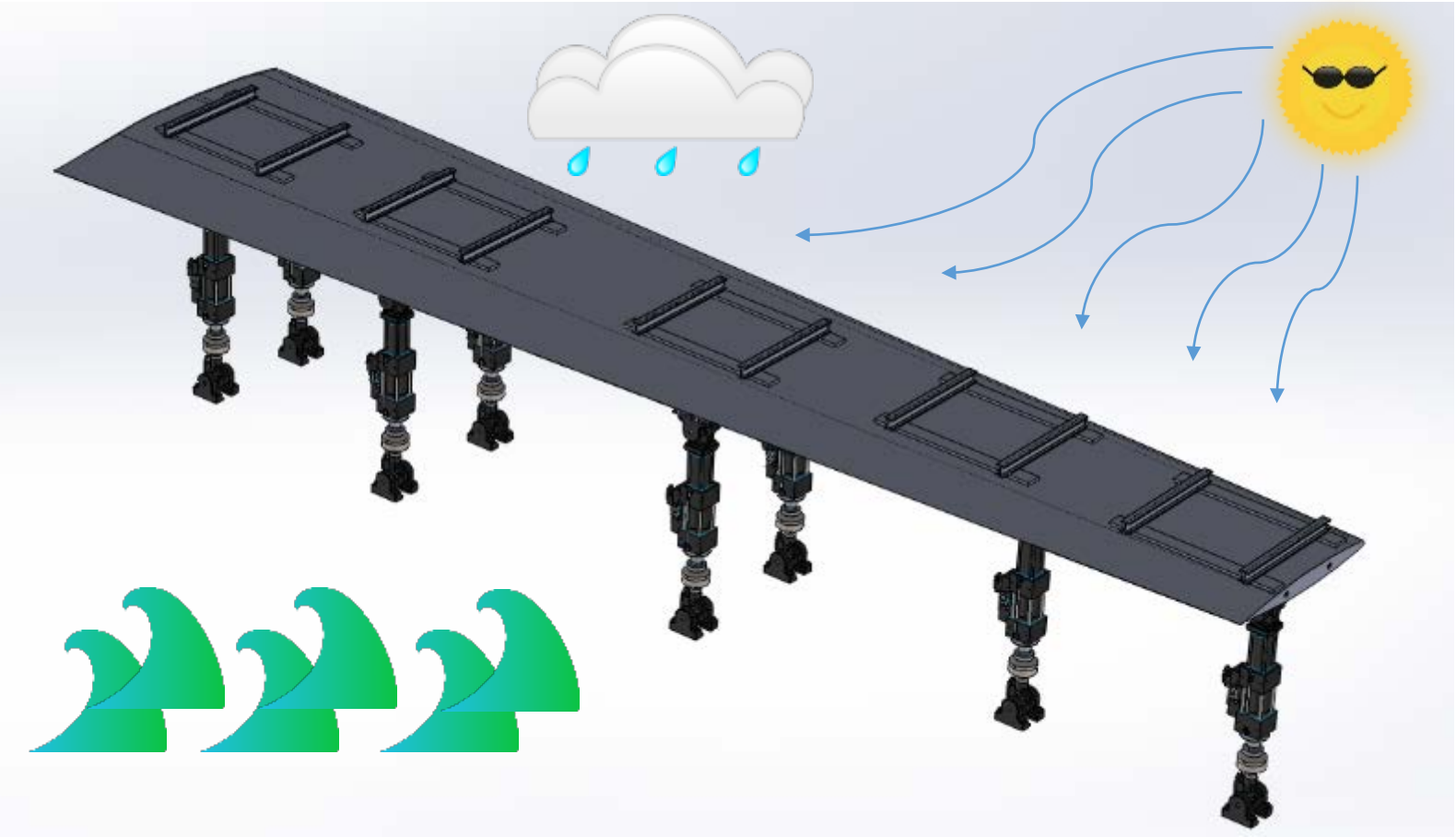

- Sunlight and rain shower exposure
- Sea water environment exposure with option of sea water spray

Multimodal Testing in an Operationally Relevant Environment

In order to replicate service exposures, atmospheric chemistry and its impact on the surface must first be understood

Engineering Impact

The C-CoAST is part of a DoD goal to achieve improved accelerated environmental testing and qualification

Environmental Exposure

Combined atmospheric exposure and mechanical "ground truth"

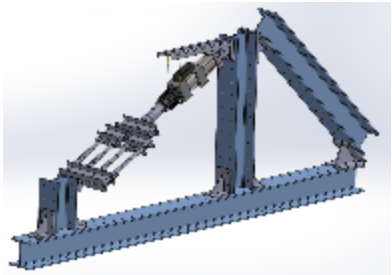

Laboratory Exposure

Improved chamber testing and qualification

Scientific Impact

An improved understanding of environmentally influenced fracture mechanism is a necessary foundation for the success of next generation of Naval weapon systems

6th Generation

7th Generation

The Key West C-COAST provides a well characterized tropical marine environment to baseline and correlate chamber tests, and a proving ground for materials and systems qualification.

NRL looks forward to the opportunity to collaborate on your material survivability projects.