Reusability of Cd Electroplating Tooling for Zn-Ni deposition

Bart Van Den Bossche, Agnieszka Franczak, Robrecht Belis
Elsyca NV, Vaartdijk 3/603, 3018 Wijgmaal, Belgium

ABSTRACT
Cd coatings offer a combination of unique properties that are highly desirable in many engineering applications. Nevertheless, Cd processing possesses serious health and environmental drawbacks because of which new alternatives are sought. Among them, the Zn-Ni electrodeposits have been seen as a viable replacement for Cd coatings. This project deals with the design of a conformal tooling structure that can be used for both Cd and Zn-Ni electroplating processes of a nose landing gear part. The conforming components are designed and optimized based on **Elsyca PlatingManager** software technology.

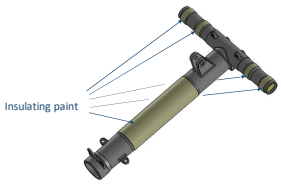

Reference part – landing gear.

Layer thickness specifications

Metal	Thickness range, mm
Cd	10 - 25
Zn-Ni	7 - 15

Tooling targets:

- Meeting layer thickness specifications
- Reduce the total plating time as much as possible
- Keep the tooling configuration as simple and robust as possible

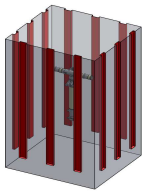

Position of the reference part in the tank.

Influence of the plating time on the layer thickness distribution

Cd plating

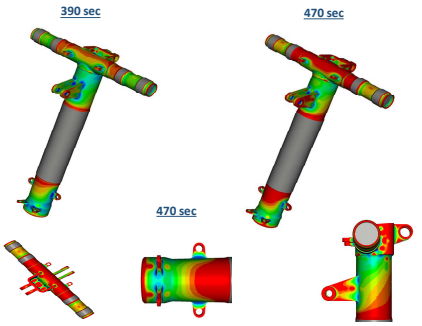

Zn-Ni plating

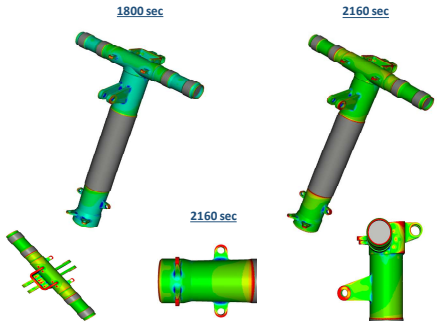

Electroplating of both the Cd and Zn-Ni layers results in a non-uniform layer thickness distribution over the active surface areas of the part, even when tooling is applied. Both overplating (red zones) and underplating (blue zones) occurs. The bar graphs below indicate the percentage of the active surface area of the part that is contained in different layer thickness intervals, or Ni content intervals in case of Zn-Ni plating. Minimum and maximum specifications are also indicated for each of those graphs.

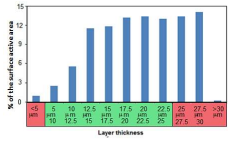

Percentage of the active surface area in function of subsequent Cd layer thickness intervals.

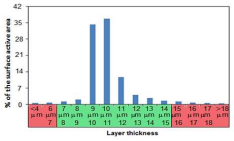

Percentage of the active surface area in function of subsequent Zn-Ni layer thickness intervals.

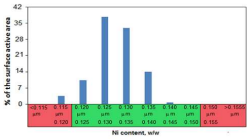

Percentage of the active surface area in function of subsequent Ni content intervals.

Tooling concept:
insulating shields and conforming anodes (addition to the main anodes)

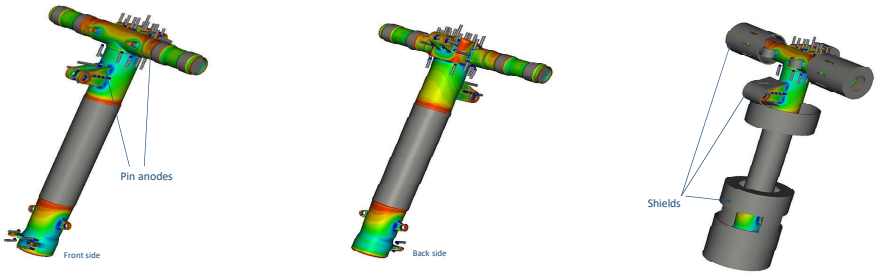

CONCLUSION
The percentage of overplated and underplated surfaces areas as resulting from both the Cd and Zn-Ni plating processes can be limited with a use of an identical tooling structure. This implies that existing tooling that was developed for the Cd plating process might be re-used for a replacement Zn-Ni plating process. The proposed tooling concept was based on insulating shields for reducing the overplated areas of the part, and conforming pin anodes (addition to the main anodes) which address the underplated zones. The optimized tooling structure as presented in this poster was achieved by use of the **Elsyca PlatingManager** software. Care must be taken that also the nickel content is within specifications. Depending on the actual chemistry being used, the Ni content might be partially out of spec. If this turns out to be the case, then either the Zn-Ni bath chemistry must be accurately monitored, or indeed the tooling for the Zn-Ni plating process might need to be further elaborated compared to the tooling that was used for the Cd plating process.
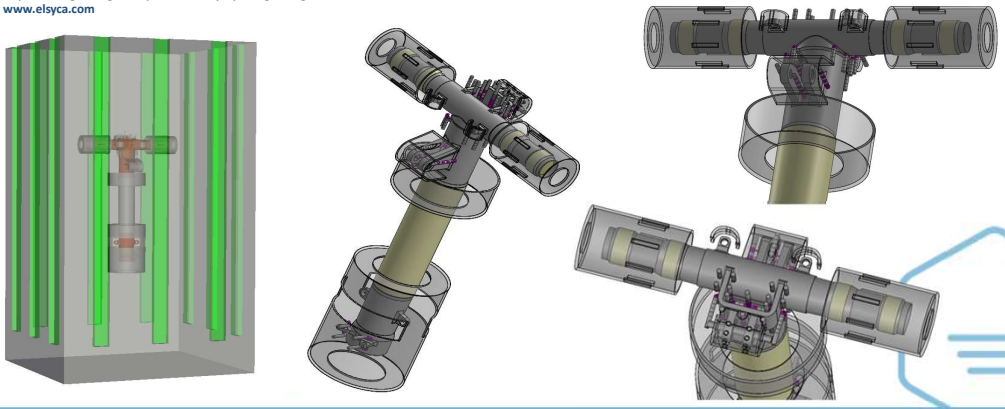
REFERENCES
Characterization of a Zinc/Nickel plating bath, Paulo Vieira, Bart Van Den Bossche, Alan Rose, Plating&Surface Finishing, December 2009
Elsyca PlatingManager: http://www.elsycaplatingmanager.com/
www.elsyca.com